GEN-2017-094

Interim Availability Interconnection System Impact Study

Published 15 January 2021

By Generator Interconnection

REVISION HISTORY

DATE OR VERSION NUMBER	AUTHOR	CHANGE DESCRIPTION	COMMENTS
3/20/2019	Generator Interconnection		Initial Posting
5/24/2019	Generator Interconnection	Changed POI from tap of both Huron to Ft Thompson 230kV lines to just one of the lines	Second Posting
5/30/2019	Generator Interconnection	Corrected Appendix C for single tap. Corrected Table 10 reactor size needed.	Third Posting
1/15/2021	Generator Interconnection	Updated power flow analysis to remove DISIS-2016-002 identified upgrades from the Base Case. Relocated Affected Systems from Appendix A & B to Power Flow Analysis.	Fourth Posting

CONTENTS

EXECUTIVE SUMMARY

The GEN-2017-094 Interconnection Customer has requested an Interim Availability Interconnection System Impact Study (IAISIS) under Section 11A of Attachment V (Generator Interconnection Procedures - GIP) to the Southwest Power Pool Open Access Transmission Tariff (OATT). GEN-2017-094 has requested 200 MW of wind generation be interconnected with Energy Resource Interconnection Service (ERIS) and Network Resource Interconnection Service (NRIS) into the transmission system of Western Area Power Administration (WAPA) in Hand County, South Dakota. GEN-2017-094 has requested this IAISIS to determine the impacts of interconnecting to the transmission system before the DISIS-2017-001 is completed.

This IAISIS addresses the effects of interconnecting the generator to the rest of the transmission system for the system topology and conditions as expected on October 6, 2020. GEN-2017-094 is requesting the interconnection of eighty (80) GE 2.5 MW wind turbines and associated facilities interconnecting at a new substation tapping Ft. Thompson - Huron 230 kV. For this IAISIS, power flow, stability and short circuit analyses were conducted.

Power flow and stability analysis from this IAISIS has determined that GEN-2017-094 can interconnect 200 MW of wind generation with Energy Resource Interconnection Service (ERIS) with system conditions of higher queued projects listed within **Table 1** in service.

Network Resource Interconnection Service (NRIS) is not available until Network Upgrades identified within **Table 2** of this report are completed.

If additional generation projects, listed within **Table 3** and **Table 4,** with queue priority equal to or higher than the study project request go into commercial operation, this IAISIS may need to be restudied to ensure that Interim service remains available for the customer's request.

It should be noted that while this IAISIS analyzed many of the most probable contingencies, it is not an all-inclusive list that can account for every operational situation. Additionally, the generator may not be able to inject any power onto the Transmission System due to constraints that fall below the threshold of mitigation for a Generator Interconnection request. Because of this, it is likely that the Customers may be required to reduce their generation output to **0 MW** under certain system conditions to allow system operators to maintain the reliability of the transmission network.

In accordance with FERC Order 827 GEN-2017-094 will be required to provide dynamic reactive power within the power factor range of 0.95 leading (absorbing Vars from the network) to 0.95 lagging (providing Vars to the network) at continuous rated power output at the high side of the generator substation. Additionally, the project wind farm was found to stay connected during the contingencies that were studied and, therefore, will meet the Low Voltage Ride Through (LVRT) requirements of FERC Order #661A.

Nothing in this study should be construed as a guarantee of transmission service or delivery rights. If the customer wishes to obtain deliverability to final customers, a separate request for transmission service must be requested on Southwest Power Pool's OASIS by the customer.

PURPOSE

GEN-2017-094 (Interconnection Customer) has requested an Interim Availability Interconnection System Impact Study (IAISIS) under the Southwest Power Pool (SPP) Open Access Transmission Tariff (OATT) for interconnection request into the integrated transmission system of Western Area Power Administration (WAPA).

The purpose of this study is to evaluate the impacts of interconnecting GEN-2017-094 request with a total of 200 MW comprised of eighty (80) GE 2.5 MW and associated facilities interconnecting at a new substation tapping Ft. Thompson - Huron 230 kV in Hand County, South Dakota. The Interconnection Customer has requested this amount to be studied with Energy Resource Interconnection Service (ERIS) and Network Resource Interconnection Service (NRIS) to commence on or around October 2020.

Power flow, transient stability, and short circuit analyses were conducted for this IAISIS in accordance with GIA Section 11A.

The IAISIS considers the Base Case as well as all Generating Facilities (and with respect to (c) below, any identified Network Upgrades associated with such higher queued interconnection) that, on the date the IAISIS is commenced:

a) are directly interconnected to the Transmission System;
b) are interconnected to Affected Systems and may have an impact on the Interconnection Request;
c) have a pending higher queued Interconnection Request to interconnect to the Transmission System listed in **Table 1**; or
d) have no Queue Position but have executed an LGIA or requested that an unexecuted LGIA be filed with FERC.

Any changes to these assumptions, for example, one or more of the previously queued requests not included within this study executing an interconnection agreement and commencing commercial operation, may require a re-study of this IAISIS at the expense of the Customer.

Nothing within this System Impact Study constitutes a request for transmission service or confers upon the Interconnection Customer any right to receive transmission service rights. Should the Customer require transmission service, those rights should be requested through SPP's Open Access Same-Time Information System (OASIS).

This IAISIS study included prior queued generation interconnection requests. Those listed within **Table 1** are the generation interconnection requests that are assumed to have rights to either full or partial interconnection service prior to the requested October 2020 in-service for this IAISIS. Also listed in **Table 1** are both the amount of MWs of interconnection service expected at the effective time of this study and the total MWs requested of interconnection service, the fuel type, the point of interconnection (POI), and the current status of each particular prior queued request.

Table 1: Generation Requests Included within IAISIS for Power Flow and Stability Analysis

Project	MW	Total MW	Fuel Source	POI	Status
GEN-2002-009IS (WAPA GI-0209)	40.5	40.5	Wind	Ft Thompson 69kV [Hyde 69kV]	Commercial Operation
GEN-2007-013IS (WAPA GI-0713)	50	50	Wind	Wessington Springs 230kV	Commercial Operation
GEN-2007-014IS (WAPA GI-0714)	100	100	Wind	Wessington Springs 230kV	Commercial Operation
GEN-2009-001IS (WAPA GI-0901)	200	200	Wind	Groton-Watertown 345kV	On Schedule
GEN-2009-018IS (WAPA GI-0918)	99.5	99.5	Wind	Groton 115kV	Commercial Operation
GEN-2010-003IS (WAPA GI-1003)	34	34	Wind	Wessington Springs 230kV	Commercial Operation
GEN-2013-009IS (WAPA GI-1309)	19.5	19.5	Wind	Redfield NW 115kV	Commercial Operation
GEN-2010-001IS (WAPA GI-1001)	99	99	Wind	Bismarck-Glenham 230kV	On Schedule
GEN-2014-001IS	103.7	103.7	Wind	Sulphur 115kV	IA Pending
ASGI-2016-005 (NWE #205)	19.8	19.8	Wind	Tap White Lake - Stickeny 69kV	Affected Systems Facility Study Stage
ASGI-2016-006 (NWE #206)	19.8	19.8	Wind	Mitchell 115kV	WITHDRAWN
ASGI-2016-007 (NWE #208)	19.8	19.8	Wind	Kimball 69kV	Affected Systems Facility Study Stage
GEN-2016-017	250.7	250.7	Wind	Fort Thompson-Leland Olds 345kV	IA PENDING
GEN-2016-036	44.6	44.6	Wind	Granite Falls 115kV substation	FACILITY STUDY STAGE

Table 1: Generation Requests Included within IAISIS for Power Flow and Stability Analysis

Project	MW	Total MW	Fuel Source	POI	Status
GEN-2016-164	7.92	7.92	Wind	Groton 115 kV substation	WITHDRAWN
GEN-2017-094	200	200	Wind	Fort Thompson-Huron 230 kV	DISIS STAGE

This IAISIS was requested because the Interconnection Customer anticipates that the required studies will not be complete prior to the requested in-service date. **Table 2** below lists the required upgrade projects for NRIS that were not necessary for ERIS and stability analysis. GEN-2017-094 is included within the DISIS-2017-001. The posted reports will be located at the following Generation Interconnection Study URL: http://opsportal.spp.org/Studies/GenList?yearTypeId=154

Table 2: Upgrade Projects Required for NRIS

Upgrade Project	Type	Description	Status	Study Assignment
Cherry Co. - Gentleman 345 kV Ckt 1	Regional Reliability	Build new 110-mile 345 kV line from Gerald Gentleman Station substation to new Cherry County substation. This upgrade is contingent upon approval from Western Area Power Administration (""WAPA"") to tap the Grand Island - Fort Thompson 345 kV line.	Delayed	DISIS-2015-001
Cherry Co. Substation 345 kV	Regional Reliability	Build new Cherry County 345 kV substation and install necessary terminal equipment. This upgrade is contingent upon approval from WAPA to tap the Grand Island - Fort Thompson 345 kV line.	Delayed	DISIS-2015-001

Table 2: Upgrade Projects Required for NRIS

Upgrade Project	Type	Description	Status	Study Assignment
Cherry Co. - Holt Co. 345 kV Ckt 1	Regional Reliability	Build new 117-mile 345 kV line from new Cherry County substation to new Holt County substation. This upgrade is contingent upon approval from WAPA to tap the Grand Island - Fort Thompson 345 kV line.	Delayed	DISIS-2015-001
Dickinson 230/115kV CKT 2	Generator Interconnection	Build new 230/115/13.8kV Transformer circuit #2 at Dickinson and expand Dickinson 115kV switchyard	On Schedule	DISIS-2015-002
Antelope - Holt 345kV CKT1	Generator Interconnection	Build approximately 30 miles of new 345 kV from Antelope - Holt with a minimum normal/emergency rating of 1793 MVA.	FACILITY STUDY STAGE	DISIS-2016-002
Hoskins to Shell Creek 345kV New Build CKT 2	Generator Interconnection	Build a new 40 mile 345kV line from Hoskins to Shell Creek as a second circuit	DISIS STAGE	DISIS-2017-001
Shell Creek to Grand Island 345kV New Build	Generator Interconnection	Build a new 72 mile 345kV line from Shell Creek to Grand Island	DISIS STAGE	DISIS-2017-001

It is important to emphasize that should any previously assigned upgrade become subject to restudy (via withdrawal of a higher queued request), this IAISIS will also be subject to restudy. Again, any changes to these assumptions, for example, one or more of the previously queued requests not included within this study executing an interconnection agreement and commencing commercial operation, may require a re-study of this IAISIS at the expense of the Interconnection Customer.

The higher or equally queued projects that were not included in this study are listed in **Table 3**. While this list is not all-inclusive, it is a list of the most probable and affecting prior-queued requests that were not included within this IAISIS, either because no request for an IAISIS has been made or the request is on suspension, etc.

Table 3: Generation Requests Included within IAISIS for Stability Analysis and not Included for Power Flow Analysis

Project	MW	Total MW	Fuel Source	POI	Status
GEN-2016-004	202	202	Wind	Basin Electric 230kV	IA FULLY EXECUTED/ON SUSPENSION
GEN-2016-087	98.9	98.9	Wind	Bismark-Glenham 230kV line	IA PENDING
GEN-2016-092	175	175	Wind	Fort Thompson-Leland Olds 345kV	FACILITY STUDY STAGE
GEN-2016-094	200	200	Wind	Tap Ft Thompson - Oahe 230kV Line (Single Circuit)	IA FULLY EXECUTED/ON SCHEDULE

Table 4: Generation Requests not included for Power Flow and Stability Analysis

Project	MW	Total MW	Fuel Source	POI	Status
DISIS-2017-001 Requests	Various	Various	Various	Various	DISIS STAGE

Nothing in this System Impact Study constitutes a request for transmission service or grants the Interconnection Customer any rights to transmission service.

FACILITIES

GENERATING FACILITY

The Interconnection Customer's request is to interconnect eighty (80) GE 2.5 MW wind turbines and associated facilities interconnecting at a new substation tapping Ft. Thompson - Huron 230 kV.

INTERCONNECTION FACILITIES

Figure 1 depicts the one-line diagram of the local transmission system including the POI as well as the power flow model representing the request.

Figure 1: Proposed POI Configuration and Request Power Flow Model

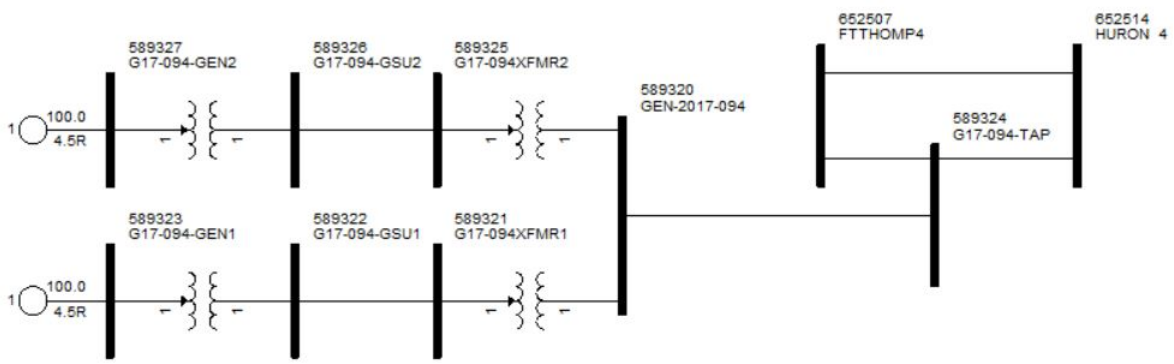

BASE CASE NETWORK UPGRADES

The Network Upgrades included within the cases used for this IAISIS are those facilities that are a part of the SPP Transmission Expansion Plan or the Balanced Portfolio projects that have in-service dates prior to October 6, 2020. These facilities have an approved Notification to Construct (NTC), or are in construction stages and expected to be in-service at the effective time of this study. No other upgrades were included for this IAISIS. If for some reason, construction on these projects is delayed or discontinued, a restudy may be needed to determine the interconnection service availability of the Customer.

POWER FLOW ANALYSIS

Power flow analysis is used to determine if the transmission system can accommodate the injection from the request without violating thermal or voltage transmission planning criteria.

See attached for the power flow results workbook.

MODEL PREPARATION

Power flow analysis was performed using modified versions of the 2016 series of 2017 ITP Near-Term study models including these seasonal models:

- Year 1 (2017) Winter Peak (17WP)
- Year 2 (2018) Spring (18G)
- Year 2 (2018) Summer Peak (18SP)
- Year 5 (2021) Light (21L)
- Year 5 (2021) Summer (21SP)
- Year 5 (2021) Winter (21WP) peak
- Year 10 (2026) Summer (26SP) peak

To incorporate the Interconnection Customers' request, a re-dispatch of existing generation within SPP was performed with respect to the amount of the Customers' injection.

For Variable Energy Resources (VER) (solar/wind) in each power flow case, ERIS, is evaluated for the generating plants within a geographical area of the interconnection request(s) for the VERs dispatched at 100% nameplate of maximum generation. The VERs in the remote areas is dispatched at 20% nameplate of maximum generation. SPP projects are dispatched across the SPP footprint using load factor ratios.

Peaking units are not dispatched in the Year 2 spring and Year 5 light, or in the "High VER" summer and winter peaks. To study peaking units' impacts, the Year 1 winter peak, Year 2 summer peak, and Year 5 summer and winter peaks, and Year 10 summer peak models are developed with peaking units dispatched at 100% of the nameplate rating and VERs dispatched at 20% of the nameplate rating. Each interconnection request is also modeled separately at 100% nameplate for certain analyses.

All generators (VER and peaking) that requested NRIS are dispatched in an additional analysis into the interconnecting Transmission Owner's (T.O.) area at 100% nameplate with ERIS only requests at 80% nameplate. This method allows for identification of network constraints that are common between regional groupings to have affecting requests share the mitigating upgrade costs throughout the cluster.

For this LOIS, only the previous queued requests listed in **Table 1** were assumed to be in-service at 100% dispatch.

STUDY METHODOLOGY AND CRITERIA

THERMAL OVERLOADS

Network constraints are found by using PSS/E AC Contingency Calculation (ACCC) analysis with PSS/E MUST First Contingency Incremental Transfer Capability (FCITC) analysis on the entire cluster grouping dispatched at the various levels previously mentioned.

For Energy Resource Interconnection Service (ERIS), thermal overloads are determined for system intact (n-0) (greater than or equal to 100% of Rate A - normal) and for contingency (n-1) (greater than or equal to 100% of Rate B – emergency) conditions.

The overloads are then screened to determine which of generator interconnection requests have at least

- 3% Distribution Factor (DF) for system intact conditions (n-0),
- 20% DF upon outage based conditions (n-1),
- or 3% DF on contingent elements that resulted in a non-converged solution.

Interconnection Requests that requested Network Resource Interconnection Service (NRIS) are also studied in a separate NRIS analysis to determine if any constraint measured greater than or equal to a 3% DF. If so, these constraints are also considered for transmission reinforcement under NRIS.

The contingency set includes all SPP control area branches and ties 69kV and above, first tier Non-SPP control area branches and ties 115 kV and above, any defined contingencies for these control areas, and generation unit outages for the SPP control areas with SPP reserve share program redispatch.

The monitored elements include all SPP control area branches, ties, and buses 69 kV and above, and all first tier Non-SPP control area branches and ties 69 kV and above. NERC Power Transfer Distribution Flowgates for SPP and first tier Non-SPP control areas are monitored. Additional NERC Flowgates are monitored in second tier or greater Non-SPP control areas. Voltage monitoring was performed for SPP control area buses 69 kV and above.

VOLTAGE

For non-converged power flow solutions that are determined to be caused by lack of voltage support, appropriate transmission support will be determined to mitigate the constraint.

After all thermal overload and voltage support mitigations are determined; a full ACCC analysis is then performed to determine voltage constraints. The following voltage performance guidelines are used in accordance with the Transmission Owner local planning criteria.

SPP Areas (69kV+):

Transmission Owner	Voltage Criteria (System Intact)	Voltage Criteria (Contingency)
AEPW	0.95 – 1.05 pu	0.92 – 1.05 pu
GRDA	0.95 – 1.05 pu	0.90 – 1.05 pu
SWPA	0.95 – 1.05 pu	0.90 – 1.05 pu
OKGE	0.95 – 1.05 pu	0.90 – 1.05 pu
OMPA	0.95 – 1.05 pu	0.90 – 1.05 pu
WFEC	0.95 – 1.05 pu	0.90 – 1.05 pu
SWPS	0.95 – 1.05 pu	0.90 – 1.05 pu
MIDW	0.95 – 1.05 pu	0.90 – 1.05 pu
SUNC	0.95 – 1.05 pu	0.90 – 1.05 pu
KCPL	0.95 – 1.05 pu	0.90 – 1.05 pu
INDN	0.95 – 1.05 pu	0.90 – 1.05 pu
SPRM	0.95 – 1.05 pu	0.90 – 1.05 pu
NPPD	0.95 – 1.05 pu	0.90 – 1.05 pu
WAPA	0.95 – 1.05 pu	0.90 – 1.05 pu
WERE L-V	0.95 – 1.05 pu	0.93 – 1.05 pu
WERE H-V	0.95 – 1.05 pu	0.95 – 1.05 pu
EMDE L-V	0.95 – 1.05 pu	0.90 – 1.05 pu
EMDE H-V	0.95 – 1.05 pu	0.92 – 1.05 pu
LES	0.95 – 1.05 pu	0.90 – 1.05 pu
OPPD	0.95 – 1.05 pu	0.90 – 1.05 pu

SPP Buses with more stringent voltage criteria:

Bus Name/Number	Voltage Criteria (System Intact)	Voltage Criteria (Contingency)
TUCO 230kV 525830	0.925 – 1.05 pu	0.925 – 1.05 pu
Wolf Creek 345kV 532797	0.985 – 1.03 pu	0.985 – 1.03 pu
FCS 646251	1.001 – 1.047 pu	1.001 – 1.047 pu

Affected System Areas (115kV+):

Transmission Owner	Voltage Criteria (System Intact)	Voltage Criteria (Contingency)
AECI	0.95 – 1.05 pu	0.90 – 1.05 pu
EES-EAI	0.95 – 1.05 pu	0.90 – 1.05 pu
LAGN	0.95 – 1.05 pu	0.90 – 1.05 pu
EES	0.95 – 1.05 pu	0.90 – 1.05 pu
AMMO	0.95 – 1.05 pu	0.90 – 1.05 pu
CLEC	0.95 – 1.05 pu	0.90 – 1.05 pu
LAFA	0.95 – 1.05 pu	0.90 – 1.05 pu
LEPA	0.95 – 1.05 pu	0.90 – 1.05 pu
XEL	0.95 – 1.05 pu	0.90 – 1.05 pu
MP	0.95 – 1.05 pu	0.90 – 1.05 pu

SMMPA	0.95 – 1.05 pu	0.90 – 1.05 pu
GRE	0.95 – 1.05 pu	0.90 – 1.10 pu
OTP	0.95 – 1.05 pu	0.90 – 1.05 pu
OTP-H (115kV+)	0.97 – 1.05 pu	0.92 – 1.10 pu
ALTW	0.95 – 1.05 pu	0.90 – 1.05 pu
MEC	0.95 – 1.05 pu	0.90 – 1.05 pu
MDU	0.95 – 1.05 pu	0.90 – 1.05 pu
SPC	0.95 – 1.05 pu	0.95 – 1.05 pu
DPC	0.95 – 1.05 pu	0.90 – 1.05 pu
ALTE	0.95 – 1.05 pu	0.90 – 1.05 pu

The constraints identified through the voltage scan are then screened for the following for each interconnection request. 1) 3% DF on the contingent element and 2) 2% change in pu voltage. In certain conditions, engineering judgement was used to determine whether or not a generator had impacts to voltage constraints.

RESULTS

The IAISIS ACCC analysis indicates that the Interconnection Customer may interconnect its generation into the SPP transmission system under ERIS with system conditions of higher queued projects listed within **Table 1** in service.

Network Resource Interconnection Service (NRIS) is not available until Network Upgrades identified within **Table 2** of this report are completed.

If additional generation projects, listed within **Table 3** and **Table 4,** with queue priority equal to or higher than the study project request go into commercial operation, this IAISIS may need to be restudied to ensure that Interim service remains available for the customer's request.

ACCC thermal and voltage constraint results for the IAISIS can be found in **Table 5**.

These transmission constraints occur when this study's generation is dispatched into the SPP footprint for ERIS and WAPA footprint for NRIS.

Table 5: GEN-2017-094 Thermal Constraints for Transmission Reinforcement Mitigation

Group	Service	Constraint	Type	Seasons	Most Severe Contingency	Rating	Violation	Mitigation
15	ER	Split Rock to White 345 kV circuit 1	Thermal	17WP, 18G, 18SP, 21SP, 26SP	System Intact	717 MVA	127.2 %	N/A, existing rating is 1075.6 MVA
15	ER	N/A	Voltage	N/A	N/A	N/A	N/A	N/A
00	NR	Grand Island to Holt 345 kV circuit 1	Thermal	17WP, 18SP, 21SP, 21WP, 26SP	Columbus to Meadow Grove 230 kV circuit 1	720	151.8 %	Cherry Co. 345 kV Substation Cherry Co. to Gentleman 345 kV Ckt 1 Cherry Co. to Holt Co. 345 kV Ckt 1 Hoskins to Shell Creek 345kV Ckt 2 Shell Creek to Grand Island 345kV Ckt 1
00	NR	Grand Prairie to Holt 345 kV circuit 1	Thermal	18SP, 21SP, 26SP	Columbus to Meadow Grove 230 kV circuit 1	844	103.5 %	N/A, existing rating is 956 MVA
00	NR	N/A	Voltage	N/A	N/A	N/A	N/A	N/A
15	NR	Split Rock to White 345 kV circuit 1	Thermal	18G	Fort Thompson to GEN-2017-094 Tap 230 kV circuit 1	717 MVA	112.2 %	N/A, existing rating is 1075.6 MVA
15	NR	N/A	Voltage	N/A	N/A	N/A	N/A	N/A

CURTAILMENT AND SYSTEM RELIABILITY

In no way does this study guarantee operation for all periods of time. It should be noted that although this study analyzed many of the most probable contingencies, it is not an all-inclusive list and cannot account for every operational situation. Because of this, it is likely that the Customer(s) may be required to reduce their generation output to **0 MW** under certain system conditions to allow system operators to maintain the reliability of the transmission network.

AFFECTED SYSTEMS

Affected System Impact Studies have not been performed as part of this study.

SPP has coordinated with and identified the need for Affected System Impact Studies of GEN-2017-094 to be performed as part of DISIS-2017-001.

Prior to the completion of the facilities identified in DISIS-2017-001 MISO Affected System Impact Studies, GEN-2017-094 may be required to participate in the MISO AERIS/QOL studies to determine the applicable operating limitations required prior to completion of identified facilities.

Once DISIS-2017-001 is complete, the Interim GIA and successor GIA may be required to include identified upgrades or conditions determined in the Affected System Impact Studies for DISIS-2017-001.

STABILITY ANALYSIS

Transient stability analysis is used to determine if the transmission system can maintain angular stability and ensure bus voltages stay within planning criteria bandwidth during and after a disturbance while considering the addition of a generator interconnection request.

MODEL PREPARATION

Transient stability analysis was performed using modified versions of the 2016 series of Model Development Working Group (MDWG) dynamic study models including the 2017 winter, 2018 and 2026 summer peak dynamic cases. The cases were adapted to resemble the power flow study cases with regards to prior queued generation requests and topology. Finally, the prior queued and study generation was dispatched into the SPP footprint. Initial simulations are then carried out for a no-disturbance run of twenty (20) seconds to verify the numerical stability of the model.

DISTURBANCES

Thirty (30) contingencies were identified for use in this study. These faults are listed within

Table 6. These contingencies included three-phase faults and single-phase line faults at locations defined by SPP. Single-phase line faults were simulated by applying fault impedance to the positive sequence network at the fault location to represent the effect of the negative and zero sequence networks on the positive sequence network. The fault impedance was computed to give a positive sequence voltage at the specified fault location of approximately 60% of pre-fault voltage. This method is in agreement with SPP current practice.

With exception to transformers, the typical sequence of events for a three-phase and single-phase fault is as follows:

1. apply fault at particular location
2. continue fault for five (5) cycles, clear the fault by tripping the faulted facility
3. after an additional twenty (20) cycles, re-close the previous facility back into the fault
4. continue fault for five (5) additional cycles
5. trip the faulted facility and remove the fault

Transformer faults are typically only performed for three-phase faults, unless otherwise noted. Additionally the sequence of events for a transformer is to 1) apply a three-phase fault for five (5) cycles and 2) clear the fault by tripping the affected transformer facility. Unless otherwise noted there will be no re-closing into a transformer fault.

Table 6: Contingencies Evaluated for Interim Service

Cont. No.	Contingency Name	Description
1	FLT_01_G17094TAP_FTTHOMP4_230kV_3PH	3 phase fault on G17-094-TAP (589324) to Ft Thompson (652507) 230kV Ckt 1, near G17-094-TAP. a. Apply fault at the G17-094-TAP 230kV bus. b. Clear fault after 5 cycles and trip the faulted line. c. Wait 20 cycles, and then re-close the line in (b) back into the fault. d. Leave fault on for 5 cycles, then trip the line in (b) and remove the fault.
2	FLT_02_FTTHOMP4_FTTHOMP8_230_69kV_3PH	3 phase fault on Ft Thompson (652507) to Ft Thompson (652276) 230/69kV Ckt 2, near Ft Thompson. a. Apply fault at the Ft Thompson 230kV bus. b. Clear fault after 5 cycles and trip the faulted transformer.
3	FLT_03_FTTHOMP4_G16094TAP_230kV_3PH	3 phase fault on Ft Thompson (652507) to G16-094-TAP (587764) 230kV Ckt 1, near Ft Thompson. a. Apply fault at the Ft Thompson 230kV bus. b. Clear fault after 5 cycles and trip the faulted line. c. Wait 20 cycles, and then re-close the line in (b) back into the fault. d. Leave fault on for 5 cycles, then trip the line in (b) and remove the fault.
4	FLT_04_FTTHOMP4_OAHE4_230kV_3PH	3 phase fault on Ft Thompson (652507) to Oahe (652519) 230kV Ckt 4, near Ft Thompson. a. Apply fault at the Ft Thompson 230kV bus. b. Clear fault after 5 cycles and trip the faulted line. c. Wait 20 cycles, and then re-close the line in (b) back into the fault. d. Leave fault on for 5 cycles, then trip the line in (b) and remove the fault.
5	FLT_05_FTTHOMP4_FTTHOMP3_230_345kV_3PH	3 phase fault on Ft Thompson (652507) to Ft Thompson (652506) 230/345kV Ckt 1, near Ft Thompson. a. Apply fault at the Ft Thompson 230kV bus. b. Clear fault after 5 cycles and trip the faulted transformer.
6	FLT_06_FTTHOM1LNX3_G16017TAP_345kV_3PH	3 phase fault on Fort Thompson (652806) to G16-017-TAP (560074) 345kV Ckt 1, near Fort Thompson. a. Apply fault at the Fort Thompson 345kV bus. b. Clear fault after 5 cycles and trip the faulted line. c. Wait 20 cycles, and then re-close the line in (b) back into the fault. d. Leave fault on for 5 cycles, then trip the line in (b) and remove the fault.
7	FLT_07_FTTHOM2LNX3_GRPRAR2LNX3_345kV_3PH	3 phase fault on Fort Thompson (652807) to Grand Prairie (652833) 345kV Ckt 1, near Fort Thompson. a. Apply fault at the Fort Thompson 345kV bus. b. Clear fault after 5 cycles and trip the faulted line. c. Wait 20 cycles, and then re-close the line in (b) back into the fault. d. Leave fault on for 5 cycles, then trip the line in (b) and remove the fault.
8	FLT_08_FTTHOMP4_LAKPLAT4_230kV_3PH	3 phase fault on Ft Thompson (652507) to Lake Platt (652516) 230kV Ckt 1, near Ft Thompson. a. Apply fault at the Ft Thompson 230kV bus. b. Clear fault after 5 cycles and trip the faulted line. c. Wait 20 cycles, and then re-close the line in (b) back into the fault. d. Leave fault on for 5 cycles, then trip the line in (b) and remove the fault.

Cont. No.	Contingency Name	Description
9	FLT_09_FTTHOMP4_FTRANDL4_230kV_3PH	3 phase fault on Ft Thompson (652507) to Ft Randal (652509) 230kV Ckt 1, near Ft Thompson. a. Apply fault at the Ft Thompson 230kV bus. b. Clear fault after 5 cycles and trip the faulted line. c. Wait 20 cycles, and then re-close the line in (b) back into the fault. d. Leave fault on for 5 cycles, then trip the line in (b) and remove the fault.
10	FLT_10_FTTHOMP4_WESSINGTON4_230kV_3PH	3 phase fault on Ft Thompson (652507) to Wessington (652607) 230kV Ckt 1, near Ft Thompson. a. Apply fault at the Ft Thompson 230kV bus. b. Clear fault after 5 cycles and trip the faulted line. c. Wait 20 cycles, and then re-close the line in (b) back into the fault. d. Leave fault on for 5 cycles, then trip the line in (b) and remove the fault.
11	FLT_11_FTTHOMP4_LETCHER4_230kV_3PH	3 phase fault on Ft Thompson (652507) to Letcher (652606) 230kV Ckt 1, near Ft Thompson. a. Apply fault at the Ft Thompson 230kV bus. b. Clear fault after 5 cycles and trip the faulted line. c. Wait 20 cycles, and then re-close the line in (b) back into the fault. d. Leave fault on for 5 cycles, then trip the line in (b) and remove the fault.
12	FLT_12_WESSINGTON4_STORLA4_230kV_3PH	3 phase fault on Wessington (652607) to Storla (659122) 230kV Ckt 1, near Wessington. a. Apply fault at the Wessington 230kV bus. b. Clear fault after 5 cycles and trip the faulted line. c. Wait 20 cycles, and then re-close the line in (b) back into the fault. d. Leave fault on for 5 cycles, then trip the line in (b) and remove the fault.
13	FLT_13_G17094TAP_HURON4_230kV_3PH	3 phase fault on G17-094-TAP (589324) to Huron (652514) 230kV Ckt 1, near G17-094-TAP. a. Apply fault at the G17-094-TAP 230kV bus. b. Clear fault after 5 cycles and trip the faulted line. c. Wait 20 cycles, and then re-close the line in (b) back into the fault. d. Leave fault on for 5 cycles, then trip the line in (b) and remove the fault.
14	FLT_14_HURON4_BRDLAND4_230kV_3PH	3 phase fault on Huron (652514) to Broadland (659205) 230kV Ckt 1, near Huron. a. Apply fault at the Huron 230kV bus. b. Clear fault after 5 cycles and trip the faulted line. c. Wait 20 cycles, and then re-close the line in (b) back into the fault. d. Leave fault on for 5 cycles, then trip the line in (b) and remove the fault.
15	FLT_15_BRDLAND4_BRDLAND3_230_345kV_3PH	3 phase fault on Broadland (659205) to Huron (659120) 230/345kV Ckt 1, near Broadland. a. Apply fault at the Broadland 230kV bus. b. Clear fault after 5 cycles and trip the faulted transformer.
16	FLT_16_HURON4_HURON7_230_115kV_3PH	3 phase fault on Huron (652514) to Huron (652515) 230/115kV Ckt 2, near Huron. a. Apply fault at the Huron 230kV bus. b. Clear fault after 5 cycles and trip the faulted transformer.
17	FLT_17_HURON7_HURON	3 phase fault on Huron (652515) to Huron (652284) 115/69kV Ckt 1, near Huron.

Cont. No.	Contingency Name	Description
	8_115_69kV_3PH	a. Apply fault at the Huron 115kV bus. b. Clear fault after 5 cycles and trip the faulted transformer.
18	FLT_18_HURON7_BTAPWP7_115kV_3PH	3 phase fault on Huron (652515) to West Park B Tap (660009) 115kV Ckt 1, near Huron. a. Apply fault at the Huron 115kV bus. b. Clear fault after 5 cycles and trip the faulted line. c. Wait 20 cycles, and then re-close the line in (b) back into the fault. d. Leave fault on for 5 cycles, then trip the line in (b) and remove the fault.
19	FLT_19_HURON7_HURONWP7_115kV_3PH	3 phase fault on Huron (652515) to Huron West Park (660003) 115kV Ckt 1, near Huron. a. Apply fault at the Huron 115kV bus. b. Clear fault after 5 cycles and trip the faulted line. c. Wait 20 cycles, and then re-close the line in (b) back into the fault. d. Leave fault on for 5 cycles, then trip the line in (b) and remove the fault.
20	FLT_20_HURON7_WOONSKT7_115kV_3PH	3 phase fault on Huron (652515) to Woonsocket (652528) 115kV Ckt 1, near Huron. a. Apply fault at the Huron 115kV bus. b. Clear fault after 5 cycles and trip the faulted line. c. Wait 20 cycles, and then re-close the line in (b) back into the fault. d. Leave fault on for 5 cycles, then trip the line in (b) and remove the fault.
21	FLT_21_HURON4_CARPENTER4_230kV_3PH	3 phase fault on Huron (652514) to Carpenter (652614) 230kV Ckt 1, near Huron. a. Apply fault at the Huron 230kV bus. b. Clear fault after 5 cycles and trip the faulted line. c. Wait 20 cycles, and then re-close the line in (b) back into the fault. d. Leave fault on for 5 cycles, then trip the line in (b) and remove the fault.
22	FLT_22_HURON4_WATERTN4_230kV_3PH	3 phase fault on Huron (652514) to Watertown (652530) 230kV Ckt 2, near Huron. a. Apply fault at the Huron 230kV bus. b. Clear fault after 5 cycles and trip the faulted line. c. Wait 20 cycles, and then re-close the line in (b) back into the fault. d. Leave fault on for 5 cycles, then trip the line in (b) and remove the fault.
23	FLT_23_CARPENTER4_WATERTN4_230kV_3PH	3 phase fault on Carpenter (652614) to Watertown (652530) 230kV Ckt 1, near Carpenter. a. Apply fault at the Carpenter 230kV bus. b. Clear fault after 5 cycles and trip the faulted line. c. Wait 20 cycles, and then re-close the line in (b) back into the fault. d. Leave fault on for 5 cycles, then trip the line in (b) and remove the fault.
24	FLT_24_WATERTN4_APPLEDORN4_230kV_3PH	3 phase fault on Watertown (652530) to Appledorn (652582) 230kV Ckt 1, near Watertown. a. Apply fault at the Watertown 230kV bus. b. Clear fault after 5 cycles and trip the faulted line. c. Wait 20 cycles, and then re-close the line in (b) back into the fault. d. Leave fault on for 5 cycles, then trip the line in (b) and remove the fault.

Cont. No.	Contingency Name	Description
25	FLT_25_WATERTN4_WATERTN3_230_345kV_3PH	3 phase fault on Watertown (652530) to Watertown (652529) 230/345kV Ckt 1, near Watertown. a. Apply fault at the Watertown 230kV bus. b. Clear fault after 5 cycles and trip the faulted transformer.
26	FLT_26_WESSINGTON4_STORLA4PO_230kV_3PH	Prior Outage with Fort Thompson (652807) - Grand Prairie (652833) 345kV Ckt 1 out of service, followed by 3 phase fault on Wessington (652607) to Storla (659122) 230kV Ckt 1, near Wessington. a. Open Fort Thompson (652807) - Grand Prairie (652833) 345kV Ckt 1 then solve. b. Apply fault at the Wessington bus. c. Clear fault after 5 cycles and trip the faulted line. d. Wait 20 cycles, and then re-close the line in (c) back into the fault. d. Leave fault on for 5 cycles, then trip the line in (c) and remove the fault.
27	FLT_27_WATERTN4_APPLEDORN4PO_230kV_3PH	Prior Outage with Fort Thompson (652807) - Grand Prairie (652833) 345kV Ckt 1 out of service, followed by 3 phase fault on Watertown (652530) to Appledorn (652582) 230kV Ckt 1, near Watertown. a. Open Fort Thompson (652807) - Grand Prairie (652833) 345kV Ckt 1 then solve. b. Apply fault at the Watertown bus. c. Clear fault after 5 cycles and trip the faulted line. d. Wait 20 cycles, and then re-close the line in (c) back into the fault. d. Leave fault on for 5 cycles, then trip the line in (c) and remove the fault.
28	FLT_28_HURON4_WATERTN4SB_230kV_1PH	1 phase fault with stuck breaker on Huron (652514) to Watertown (652530) 230kV Ckt 2, near Huron. a. Apply fault at the Huron 230kV bus. b. Clear fault after 16 cycles, trip the faulted line and trip: Trip Huron (652514) to Carpenter (652614) 230kV Ckt 1 line Trip Huron 230/115/13.3kV (652514/652515/652281) Transformer Ckt 1
29	FLT_29_G17094TAP_FTTHOMP4SB_230kV_1PH	1 phase fault with stuck breaker on G17-094-TAP (589324) to Ft Thompson (652507) 230kV Ckt 1, near G17-094-TAP. a. Apply fault at the G17-094-TAP 230kV bus. b. Clear fault after 16 cycles, trip the faulted line and trip: Trip Fort Thompson (652507) to G16-094-TAP (587764) 230kV Ckt 2 line (towards Oahe)
30	FLT_30_HURON4_WATERTN4SB_230kV_1PH	1 phase fault with stuck breaker on Huron (652514) to Watertown (652530) 230kV Ckt 2, near Huron. a. Apply fault at the Huron 230kV bus. b. Clear fault after 16 cycles, trip the faulted line and trip: Trip Watertown (652530) to Blair (652503) 230kV Ckt 1 line Trip Watertown 230/115/13.2kV (652530/652531/652239) Transformer Ckt 1 Trip Watertown (652530) to Watertown Capacitor (652630) 230kV Ckt Z line Trip Watertown 230/345/13.8kV (652530/652529/652237) Transformer Ckt 1 Trip Watertown 230/20kV (652530/652539) Transformer Ckt 1 (SVC)

RESULTS

Results of the stability analysis are summarized in **Table 7**. These results are valid for GEN-2017-094 interconnecting with a generation amount up to 200 MW. Based on the stability results and with all network upgrades in service, GEN-2017-094 did not cause any stability problems and remained stable for all faults studied. No generators tripped or went unstable, and voltages recovered to acceptable levels.

Complete sets of plots for the stability analysis are available on request.

Table 7: Fault Analysis Results

	Contingency Number and Name	2017WP	2018SP	2026SP
1	FLT_01_G17094TAP_FTTHOMP4_230kV_3PH	Stable	Stable	Stable
2	FLT_02_FTTHOMP4_FTTHOMP8_230_69kV_3PH	Stable	Stable	Stable
3	FLT_03_FTTHOMP4_G16094TAP_230kV_3PH	Stable	Stable	Stable
4	FLT_04_FTTHOMP4_OAHE4_230kV_3PH	Stable	Stable	Stable
5	FLT_05_FTTHOMP4_FTTHOMP3_230_345kV_3PH	Stable	Stable	Stable
6	FLT_06_FTTHOM1LNX3_G16017TAP_345kV_3PH	Stable	Stable	Stable
7	FLT_07_FTTHOM2LNX3_GRPRAR2LNX3_345kV_3PH	Stable	Stable	Stable
8	FLT_08_FTTHOMP4_LAKPLAT4_230kV_3PH	Stable	Stable	Stable
9	FLT_09_FTTHOMP4_FTRANDL4_230kV_3PH	Stable	Stable	Stable
10	FLT_10_FTTHOMP4_WESSINGTON4_230kV_3PH	Stable	Stable	Stable
11	FLT_11_FTTHOMP4_LETCHER4_230kV_3PH	Stable	Stable	Stable
12	FLT_12_WESSINGTON4_STORLA4_230kV_3PH	Stable	Stable	Stable
13	FLT_13_G17094TAP_HURON4_230kV_3PH	Stable	Stable	Stable
14	FLT_14_HURON4_BRDLAND4_230kV_3PH	Stable	Stable	Stable
15	FLT_15_BRDLAND4_BRDLAND3_230_345kV_3PH	Stable	Stable	Stable
16	FLT_16_HURON4_HURON7_230_115kV_3PH	Stable	Stable	Stable
17	FLT_17_HURON7_HURON8_115_69kV_3PH	Stable	Stable	Stable
18	FLT_18_HURON7_BTAPWP7_115kV_3PH	Stable	Stable	Stable

Contingency Number and Name		2017WP	2018SP	2026SP
19	FLT_19_HURON7_HURONWP7_115kV_3PH	Stable	Stable	Stable
20	FLT_20_HURON7_WOONSKT7_115kV_3PH	Stable	Stable	Stable
21	FLT_21_HURON4_CARPENTER4_230kV_3PH	Stable	Stable	Stable
22	FLT_22_HURON4_WATERTN4_230kV_3PH	Stable	Stable	Stable
23	FLT_23_CARPENTER4_WATERTN4_230kV_3PH	Stable	Stable	Stable
24	FLT_24_WATERTN4_APPLEDORN4_230kV_3PH	Stable	Stable	Stable
25	FLT_25_WATERTN4_WATERTN3_230_345kV_3PH	Stable	Stable	Stable
26	FLT_26_WESSINGTON4_STORLA4PO_230kV_3PH	Stable	Stable	Stable
27	FLT_27_WATERTN4_APPLEDORN4PO_230kV_3PH	Stable	Stable	Stable
28	FLT_28_HURON4_WATERTN4SB_230kV_1PH	Stable	Stable	Stable
29	FLT_29_G17094TAP_FTTHOMP4SB_230kV_1PH	Stable	Stable	Stable
30	FLT_30_HURON4_WATERTN4SB_230kV_1PH	Stable	Stable	Stable

FERC LVRT COMPLIANCE

FERC Order #661A places specific requirements on wind farms through its Low Voltage Ride Through (LVRT) provisions. For Interconnection Agreements signed after December 31, 2006, wind farms shall stay on line for faults at the POI that draw the voltage down at the POI to 0.0 pu.

Fault contingencies were developed to verify that wind farms remain on line when the POI voltage is drawn down to 0.0 pu. These contingencies are shown in **Table 8**.

Table 8: LVRT Contingencies

Contingency Number and Name		Description
1	FLT_01_G17094TAP_FTTHOMP4_230kV_3PH	3 phase fault on G17-094-TAP (589324) to Ft Thompson (652507) 230kV Ckt 1, near G17-094-TAP
13	FLT_13_G17094TAP_HURON4_230kV_3PH	3 phase fault on G17-094-TAP (589324) to Huron (652514) 230kV Ckt 1, near G17-094-TAP

The required prior queued project wind farms remained online for the fault contingencies described in this section as well as the fault contingencies described in the Disturbances section of this report. GEN-2017-094 is found to be in compliance with FERC Order #661A.

POWER FACTOR ANALYSIS

In accordance with FERC Order 827 GEN-2017-094 will be required to provide dynamic reactive power within the power factor range of 0.95 leading (absorbing Vars from the network) to 0.95 lagging (providing Vars to the network) at continuous rated power output at the high side of the generator substation.

REDUCED WIND GENERATION ANALYSIS

A low wind analysis has been performed for the GEN-2017-094 Interconnection Request. SPP performed this low wind analysis for excessive capacitive charging current for the addition of the Interconnection Request facilities. The high side of the each Interconnection Customer's transformer will interconnect to The Point of Interconnection (POI).

The project generators and capacitors (if any) were turned off in the base case. The resulting reactive power injection into the transmission network comes from the capacitance of the project's transmission lines and collector cables is shown in Figure A-1 and **Figure A-2**.

Final shunt reactor requirement for each project with the model information provided to SPP is shown in **Table 10**. It is the interconnection customer's responsibility to design and install the reactive compensation equipment necessary to control the reactive power injection at the POI. If an equivalent means of compensation is installed, the reactive power required may vary with system conditions (e.g. a higher compensation amount is required for voltages above unity at the POI and a lower compensation amount is required for voltages below unity at the POI).

Table 10: Summary of Reduced Wind Generation Analysis

Request	Point of Interconnection (POI)	Reactor Size (Mvar)
GEN-2017-094	G17-094-TAP 230kV (589324)	9.5

SHORT CIRCUIT ANALYSIS

The short circuit analysis was performed on the 2018 & 2026 Summer Peak power flow cases using the PSS/E ASCC program. Since the power flow model does not contain negative and zero sequence data, only three-phase symmetrical fault current levels were calculated at the point of interconnection up to and including five levels away.

Short Circuit Analysis was conducting using flat conditions with the following PSS/E ASCC program settings:

- BUS VOLTAGES SET TO 1 PU AT 0 PHASE ANGLE
- GENERATOR P=0, Q=0
- TRANSFORMER TAP RATIOS=1.0 PU and PHASE ANGLES=0.0
- LINE CHARGING=0.0 IN +/-/0 SEQUENCE
- LOAD=0.0 IN +/- SEQUENCE, CONSIDERED IN ZERO SEQUENCE
- LINE/FIXED/SWITCHED SHUNTS=0.0 AND MAGNETIZING ADMITTANCE=0.0 IN +/-/0 SEQUENCE
- DC LINES AND FACTS DEVICES BLOCKED
- TRANSFORMER ZERO SEQUENCE IMPEDANCE CORRECTIONS IGNORED

RESULTS

The results of the short circuit analysis are shown in **Appendix B**: Short Circuit Analysis Results**.**

CONCLUSION

The GEN-2017-094 Interconnection Customer has requested an Interim Availability Interconnection System Impact Study (IAISIS) under the Southwest Power Pool Open Access Transmission Tariff (OATT) for 200 MW of wind generation to be interconnected with Energy Resource Interconnection Service (ERIS) and Network Resource Interconnection Service (NRIS) into the transmission system of Western Area Power Administration (WAPA) in Hand County, South Dakota. The point of interconnection will be a new substation tapping Ft. Thompson – Huron 230 kV. GEN-2017-094 under GIA Section 11A, has requested this Interim Availability Interconnection System Impact Study (IAISIS) to determine the impacts of interconnecting to the transmission system before all required Network Upgrades identified in the DISIS-2017-001 Impact Study can be placed into service.

Power flow and stability analysis from this IAISIS have determined that the GEN-2017-094 request can interconnect 200 MW of generation with ERIS with system conditions prior to the Commercial Operation of **any** of the interconnection requests listed in **Table 3** & **Table 4**.

NRIS is available following completion of the Network Upgrades listed within **Table 2** of this report.

However, full interconnection service is dependent on all upgrades identified in DISIS-2017-001 being in-service. Should any higher-queued requests withdraw from study, a restudy may be required. Furthermore, any upgrades assigned to those higher-queued requests would also be subject to restudy, which might trigger a restudy for this request.

Should any other projects, other than those listed within **Table 1** of this report, come into service an additional study may be required to determine if any limited operation service is available.

Additionally, GEN-2017-094 was found to be in compliance with FERC Order #661A when studied as listed within this report.

Any changes to these assumptions, for example, one or more of the previously queued requests not included within this study execute an interconnection agreement and commencing commercial operation, may require a re-study of this IAISIS at the expense of the Customer.

Nothing in this System Impact Study constitutes a request for transmission service or confers upon the Interconnection Customer any right to receive transmission service.

APPENDICES

APPENDIX A: REDUCED WIND GENERATION ANALYSIS RESULTS

Below figures are from the 2017WP model with identified upgrades in-service. The other 2 cases (2018SP and 2026SP) were almost identical since the Interconnection Request facilities design is the same in all cases.

Figure A-1*:* GEN-2017-094 with generators turned off

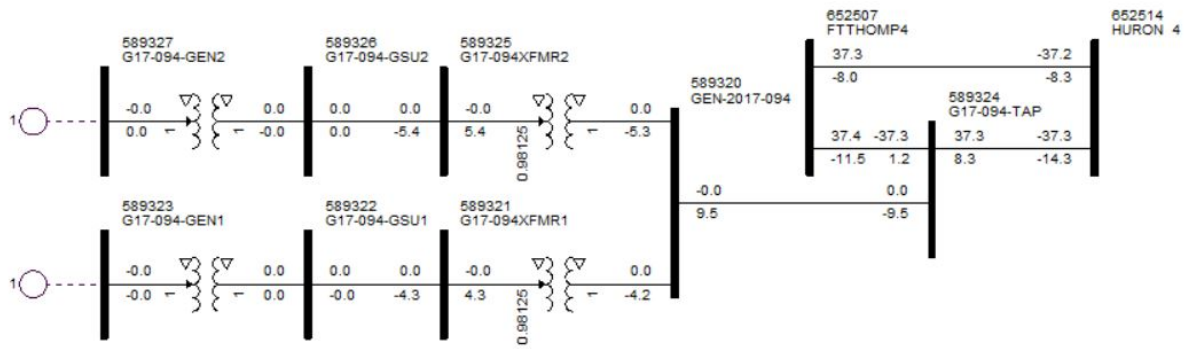

Figure A-2*:* GEN-2017-094 with generators turned off and shunt reactors added to the customer 34.5kV substation

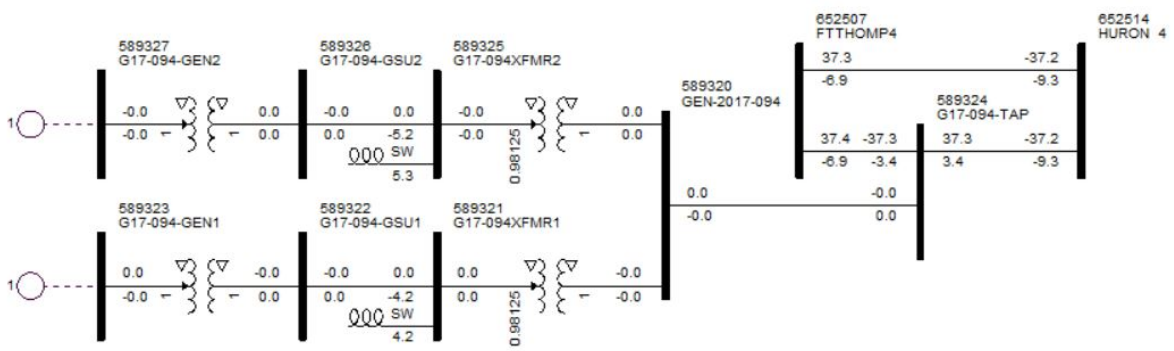

APPENDIX B: SHORT CIRCUIT ANALYSIS RESULTS

18SP

```
PSS®E ASCC SHORT CIRCUIT CURRENTS          TUE, MAY 07 2019  11:25
2016 MDWG FINAL WITH 2015 SERIES MMWG FINAL
MDWG 2018S WITH MMWG 2017S

OPTIONS USED:
    - FLAT CONDITIONS
         - BUS VOLTAGES SET TO 1 PU AT 0 PHASE ANGLE
         - GENERATOR P=0, Q=0
         - TRANSFOMRER TAP RATIOS=1.0 PU and PHASE ANGLES=0.0
         - LINE CHARGING=0.0 IN +/-/0 SEQUENCE
         - LOAD=0.0 IN +/- SEQUENCE, CONSIDERED IN ZERO SEQUENCE
         - LINE/FIXED/SWITCHED SHUNTS=0.0 AND MAGNETIZING ADMITTANCE=0.0
IN +/-/0 SEQUENCE
         - DC LINES AND FACTS DEVICES BLOCKED
         - TRANSFORMER ZERO SEQUENCE IMPEDANCE CORRECTIONS IGNORED

                                     THREE PHASE FAULT
X---------- BUS ----------X             /I+/    AN(I+)
589324 [G17-094-TAP 230.00] AMP     7691.4   -83.85
589320 [GEN-2017-094230.00] AMP     7691.4   -83.85
652507 [FTTHOMP4    230.00] AMP    19478.3   -85.60
652514 [HURON  4    230.00] AMP    11041.8   -83.75
587764 [G16-094-TAP 230.00] AMP    12634.5   -84.81
652276 [FTTHOMP8    69.000] AMP     3619.3   -87.16
652506 [FTTHOMP3    345.00] AMP     9028.0   -86.65
652509 [FTRANDL4    230.00] AMP    10698.7   -83.87
652515 [HURON  7    115.00] AMP    15334.8   -83.52
652516 [LAKPLAT4    230.00] AMP     5552.1   -82.55
652519 [OAHE   4    230.00] AMP    13243.2   -85.27
652530 [WATERTN4    230.00] AMP    14244.5   -84.62
652540 [BIGBND14    230.00] AMP    11650.9   -85.38
652541 [BIGBND24    230.00] AMP    11661.7   -85.45
652606 [LETCHER4    230.00] AMP     4705.0   -83.81
652607 [WESSINGTON 4230.00] AMP     5790.2   -84.60
652614 [CARPENTER 4 230.00] AMP     6893.3   -83.42
659205 [BRDLAND4    230.00] AMP     9980.7   -84.12
587760 [GEN-2016-094230.00] AMP    12319.6   -84.79
640540 [MEADOWGROVE4230.00] AMP     5005.6   -83.12
652277 [LAKPLAT8    69.000] AMP     4007.8   -87.21
652284 [HURON  8    69.000] AMP     3658.4   -87.70
652488 [PHILTAP4    230.00] AMP     3640.1   -82.69
652503 [BLAIR  4    230.00] AMP     9833.8   -83.76
652510 [FTRANDL7    115.00] AMP    12252.2   -83.40
```

```
652520 [OAHE   7    115.00] AMP    11172.3   -86.54
652521 [SULLYBT4    230.00] AMP     6392.8   -83.74
652523 [SIOUXFL4    230.00] AMP    12800.7   -84.96
652526 [UTICAJC4    230.00] AMP     7780.0   -82.99
652528 [WOONSKT7    115.00] AMP     5197.9   -77.57
652529 [WATERTN3    345.00] AMP    10434.8   -85.48
652531 [WATERTN7    115.00] AMP    12260.4   -85.11
652535 [REDFELD7    115.00] AMP     4088.9   -74.95
652565 [SIOUXCY4    230.00] AMP    19287.7   -84.64
652582 [APPLEDORN 4 230.00] AMP     7088.7   -82.36
652609 [LETCHER7    115.00] AMP     6024.1   -83.27
652630 [WATERTNCAP 4230.00] AMP    14244.5   -84.62
652806 [FTTHOM1-LNX3345.00] AMP     9028.0   -86.65
652807 [FTTHOM2-LNX3345.00] AMP     9028.0   -86.65
655153 [MOS-AMES-ER869.000] AMP     3548.7   -86.78
659120 [BRDLAND3    345.00] AMP     4026.4   -86.66
659122 [STORLA 4    230.00] AMP     5443.2   -84.09
659196 [CARPENTER 8 69.000] AMP     3173.4   -87.93
659295 [SDPRAIRWND 4230.00] AMP     4465.4   -84.80
660003 [HURONWP7    115.00] AMP     9975.4   -81.00
660009 [BTAP WP7    115.00] AMP    14897.2   -82.84
560074 [G16-017-TAP 345.00] AMP     5934.8   -86.53
563230 [GEN-2015-089230.00] AMP     5323.7   -82.21
602004 [SPLT RK4    230.00] AMP    12418.4   -84.96
620314 [BIGSTON4    230.00] AMP    16352.3   -85.17
640133 [COLMBUS4    230.00] AMP    10785.6   -84.81
640349 [SPENCER7    115.00] AMP     4517.9   -74.22
640386 [TWIN CH4    230.00] AMP     8417.7   -82.78
648506 [PR BRZ 4    230.00] AMP     3475.6   -83.88
652175 [G09_001IST  345.00] AMP     6292.2   -86.13
652224 [BLAIR  8    69.000] AMP     2498.9   -87.96
652242 [WATERT18    69.000] AMP     3868.9   -87.11
652285 [SULLYBT8    69.000] AMP     2373.8   -87.79
652291 [REDFELD8    69.000] AMP     2764.3   -83.36
652398 [VFODNES4    230.00] AMP     6939.1   -83.65
652463 [WH SWAN7    115.00] AMP    11950.6   -83.09
652475 [BONESTL7    115.00] AMP     3462.6   -75.32
652476 [EAGLEBT7    115.00] AMP     1935.3   -77.40
652484 [NUNDRWD4    230.00] AMP     3343.0   -82.38
652486 [PHILIP 4    230.00] AMP     3067.8   -82.38
652491 [IRVSIMM7    115.00] AMP     7929.5   -83.62
652500 [ARLNGTN7    115.00] AMP     4283.0   -76.41
652501 [ARMOUR 7    115.00] AMP     4110.4   -75.73
652504 [BROOKNG7    115.00] AMP     7127.5   -81.03
652513 [HANLON 4    230.00] AMP     5878.6   -84.28
652522 [SUMMIT-7    115.00] AMP     4566.6   -75.48
```

```
652524 [SIOUXFL7    115.00] AMP    25327.1   -84.12
652536 [RASMUSN4    230.00] AMP     6565.6   -82.44
652550 [GRANITF4    230.00] AMP    12956.0   -82.56
652564 [SIOUXCY3    345.00] AMP    14794.1   -85.23
652566 [SIOUXCY5    161.00] AMP    20203.1   -84.32
652567 [DENISON4    230.00] AMP     4273.0   -79.62
652568 [GROTONSOUTH 115.00] AMP    17501.9   -85.12
652578 [PAHOJA 4    230.00] AMP     7216.2   -82.56
652600 [ASH TAP     115.00] AMP     8417.8   -83.70
652604 [APPLEDORN 8 69.000] AMP     2499.1   -89.04
652626 [UTICAJC7    115.00] AMP     8651.1   -82.73
652821 [SULLYBT-LNX3230.00] AMP     6392.8   -83.74
652829 [WATERTN-LNX3345.00] AMP    10434.8   -85.48
652833 [GRPRAR2-LNX3345.00] AMP     7286.1   -86.08
655063 [SW341-ER8   69.000] AMP     3604.2   -87.06
655066 [SW352-ER8   69.000] AMP     3642.9   -87.55
655067 [SW353-ER8   69.000] AMP     3646.8   -87.59
655073 [MOS-CRPN-ER869.000] AMP     2432.4   -84.42
655158 [MOS-HYDE-ER869.000] AMP     2112.3   -78.12
655250 [CHMBRLAN-ER869.000] AMP     1580.2   -72.02
655328 [BIGBEND-ER8 69.000] AMP     2778.6   -78.11
655352 [AMES-ER8    69.000] AMP     1260.3   -66.71
655355 [WOONSKT-ER8 69.000] AMP     3549.7   -83.44
655385 [MOS-LKPL-ER869.000] AMP     3993.3   -87.11
655412 [CRPNTR-ER8  69.000] AMP     2814.1   -86.22
655417 [ROSWELL-ER7 115.00] AMP     2601.1   -78.66
658088 [WTREAST7    115.00] AMP     9487.4   -81.26
658094 [WTRPELI7    115.00] AMP     8441.6   -80.55
659123 [STORLA 7    115.00] AMP     6423.3   -81.55
659421 [BRDLAND-LNX3345.00] AMP     4026.4   -86.66
659900 [EAGLE  4    230.00] AMP     7081.2   -81.57
660002 [REDFLD 7    115.00] AMP     4360.8   -79.49
660004 [MITCHEL7    115.00] AMP     5861.5   -79.28
660008 [MITCLNW7    115.00] AMP     5483.7   -79.18
660012 [HURON WP   869.000] AMP     5502.0   -87.18
560347 [G10-051-TAP 230.00] AMP     7030.1   -84.04
587130 [GEN-2016-017345.00] AMP     5889.0   -86.51
587540 [ASGI1606    115.00] AMP     5483.7   -79.18
587750 [GEN-2016-092345.00] AMP     5347.3   -85.74
602008 [MINVALT4    230.00] AMP    12823.5   -82.68
602009 [MNVLTAP4    230.00] AMP    12784.7   -82.68
603009 [GRANT  7    115.00] AMP     3944.9   -76.11
603012 [LAWRENC7    115.00] AMP    28597.0   -84.68
603016 [SPLT RK7    115.00] AMP    36114.1   -85.02
619975 [GRE-WILLMAR4230.00] AMP     5182.2   -80.47
620214 [BIGSTON7    115.00] AMP    12268.4   -84.24
```

```
620322 [BSSOUTH4    230.00] AMP    16335.5   -85.34
620325 [BROWNSV4    230.00] AMP     5904.5   -82.16
635200 [RAUN   3    345.00] AMP    25196.6   -85.70
635223 [PLYMOTH5    161.00] AMP    19767.8   -83.79
640126 [E.COL. 4    230.00] AMP     9230.9   -84.55
640131 [COLMB.W4    230.00] AMP     9357.8   -84.38
640134 [KELLY  7    115.00] AMP    17099.6   -82.37
640305 [ONEILL 7    115.00] AMP     3856.2   -71.22
640343 [SHELCRK4    230.00] AMP    10327.6   -85.15
640387 [TWIN CH7    115.00] AMP    10517.7   -83.16
640404 [WAYSIDE4    230.00] AMP     2713.1   -82.54
652209 [SUMMIT-8    69.000] AMP     2669.2   -83.95
652225 [BROOKNG8    69.000] AMP     2910.9   -86.48
652235 [SIOUXFL8    69.000] AMP     3877.4   -87.07
652243 [FAITH  7    115.00] AMP     2296.1   -78.85
652249 [ARMOUR 8    69.000] AMP     2427.0   -83.83
652259 [EAGLEBE8    69.000] AMP     1631.8   -82.04
652260 [EAGLEBW8    69.000] AMP     2133.2   -81.08
652271 [ARLNGTN8    69.000] AMP     2620.9   -84.06
652278 [HANLON18    69.000] AMP     3008.2   -88.01
652279 [HANLON28    69.000] AMP     3008.2   -88.01
652287 [RASMUSN8    69.000] AMP     3158.5   -87.68
652397 [VFODNES7    115.00] AMP     6256.5   -85.63
652399 [VFODNES8    69.000] AMP     4193.1   -87.94
652438 [FORMAN 7    115.00] AMP     6499.1   -82.04
652474 [AURORA 7    115.00] AMP     4422.2   -76.51
652478 [GREGORY7    115.00] AMP     2111.9   -73.95
652481 [MIDLAND7    115.00] AMP     3252.2   -78.14
652485 [NUNDRWD7    115.00] AMP     5651.8   -82.71
652487 [PHILIP 7    115.00] AMP     5027.0   -81.48
652489 [PIERRE 7    115.00] AMP     7976.3   -83.31
652502 [BERSFRD7    115.00] AMP     3167.4   -73.94
652505 [FLANDRU7    115.00] AMP     4045.4   -74.87
652512 [GROTON 7    115.00] AMP    17501.6   -85.12
652518 [MTVERN 7    115.00] AMP     4240.6   -77.42
652525 [TYNDALL7    115.00] AMP     3737.9   -74.85
652527 [WHITLOK4    230.00] AMP     4795.4   -83.54
652532 [GR PRAIRIE 3345.00] AMP     7286.1   -86.08
652533 [BRISTOL7    115.00] AMP     4593.6   -75.14
652534 [ORDWAY 7    115.00] AMP     9326.6   -77.90
652537 [WHITE  3    345.00] AMP    21573.6   -86.04
652538 [WHITE  7    115.00] AMP     9233.9   -86.22
652551 [GRANITF7    115.00] AMP    17351.1   -82.38
652554 [MORRIS 4    230.00] AMP     4800.1   -81.91
652561 [DENISON5    161.00] AMP     5230.7   -80.84
652563 [SPENCER5    161.00] AMP     9017.2   -80.51
```

```
652574 [SIOUXCY8    69.000] AMP    17613.9   -79.64
652583 [DENISON8    69.000] AMP    10947.7   -78.27
652588 [CLEVELD4    230.00] AMP     4728.8   -82.20
652591 [HANLON 7    115.00] AMP     5473.6   -84.67
652864 [SIOUXCY-LNX3345.00] AMP    14794.1   -85.23
652884 [NUNDRWD-LNX3230.00] AMP     3343.0   -82.38
655040 [MOS-ASTR-ER869.000] AMP     1259.3   -78.08
655054 [MOS-RDFL-ER869.000] AMP     2021.3   -75.36
655056 [SW313-ER8   69.000] AMP     1555.8   -73.87
655059 [MOS-ASHT-ER869.000] AMP     1614.7   -70.13
655064 [SW343-ER8   69.000] AMP     3580.8   -87.12
655072 [SW373-ER8   69.000] AMP     2287.3   -70.34
655080 [MOS-HLTP-ER869.000] AMP     1305.3   -68.15
655108 [MOS-RVLE-ER869.000] AMP     2631.1   -76.48
655111 [SW714-ER8   69.000] AMP     2627.7   -70.24
655231 [HURON-ER8   69.000] AMP     2343.7   -68.79
655236 [MORNINGS-ER869.000] AMP     1861.3   -71.75
655238 [FRANKFRT-ER869.000] AMP     2037.9   -78.12
655294 [MORITZ-ER8  69.000] AMP     2066.1   -82.10
655329 [GANNVALL-ER869.000] AMP      831.5   -61.13
655334 [OKOBOJO-ER8 69.000] AMP     2363.5   -87.70
655373 [MOS-SLY2-ER869.000] AMP     2370.1   -87.75
655377 [SW1145-ER7  115.00] AMP    24115.7   -83.35
655384 [NWPS8645-ER869.000] AMP     1551.9   -73.93
655386 [MOS-RVR1-ER869.000] AMP     2084.0   -75.08
655418 [FREEMAN-ER7 115.00] AMP     2551.0   -77.40
655419 [SW561-ER7   115.00] AMP     5629.0   -79.16
658090 [WTRTNPP     115.00] AMP     8954.9   -80.63
658092 [WTRWEST7    115.00] AMP     8305.7   -80.37
658120 [GARFLD 7    115.00] AMP     6938.2   -80.71
659160 [GROTON 3    345.00] AMP     6083.2   -86.01
659275 [GROTONB7    115.00] AMP    17070.2   -85.15
659376 [DRY CREEK  4230.00] AMP     2606.1   -82.69
659420 [ANTELOP-LNX3345.00] AMP    15863.0   -87.42
659424 [LELAND2-LNX3345.00] AMP    16131.4   -86.96
659716 [MAPLETAP-LO7115.00] AMP    13047.4   -74.72
659901 [EAGLE  8    69.000] AMP    13570.6   -82.27
660001 [ABDNSBT7    115.00] AMP     7879.6   -82.76
660005 [TRIPP  7    115.00] AMP     4225.6   -78.82
660007 [MENNOJT7    115.00] AMP     6516.2   -80.66
660026 [NAPA JCT7   115.00] AMP     7689.9   -78.95
```

26SP

```
PSS®E ASCC SHORT CIRCUIT CURRENTS          TUE, MAY 07 2019  11:25
2016 MDWG FINAL WITH 2015 SERIES MMWG FINAL
MDWG 2026S WITH MMWG 2026S

OPTIONS USED:
    - FLAT CONDITIONS
         - BUS VOLTAGES SET TO 1 PU AT 0 PHASE ANGLE
         - GENERATOR P=0, Q=0
         - TRANSFOMRER TAP RATIOS=1.0 PU and PHASE ANGLES=0.0
         - LINE CHARGING=0.0 IN +/-/0 SEQUENCE
         - LOAD=0.0 IN +/- SEQUENCE, CONSIDERED IN ZERO SEQUENCE
         - LINE/FIXED/SWITCHED SHUNTS=0.0 AND MAGNETIZING ADMITTANCE=0.0
IN +/-/0 SEQUENCE
         - DC LINES AND FACTS DEVICES BLOCKED
         - TRANSFORMER ZERO SEQUENCE IMPEDANCE CORRECTIONS IGNORED

                                   THREE PHASE FAULT
X---------- BUS ----------X          /I+/    AN(I+)
589324 [G17-094-TAP 230.00] AMP     7696.4   -83.84
589320 [GEN-2017-094230.00] AMP     7696.4   -83.84
652507 [FTTHOMP4    230.00] AMP    19503.0   -85.59
652514 [HURON  4    230.00] AMP    11056.3   -83.75
587764 [G16-094-TAP 230.00] AMP    12643.1   -84.81
652276 [FTTHOMP8    69.000] AMP     3619.5   -87.16
652506 [FTTHOMP3    345.00] AMP     9034.8   -86.64
652509 [FTRANDL4    230.00] AMP    10725.9   -83.85
652515 [HURON  7    115.00] AMP    15333.3   -83.54
652516 [LAKPLAT4    230.00] AMP     5556.2   -82.54
652519 [OAHE   4    230.00] AMP    13250.2   -85.27
652530 [WATERTN4    230.00] AMP    14397.9   -84.65
652540 [BIGBND14    230.00] AMP    11658.6   -85.38
652541 [BIGBND24    230.00] AMP    11669.3   -85.45
652606 [LETCHER4    230.00] AMP     4713.8   -83.80
652607 [WESSINGTON 4230.00] AMP     5795.5   -84.60
652614 [CARPENTER 4 230.00] AMP     6904.3   -83.42
659205 [BRDLAND4    230.00] AMP     9992.3   -84.12
587760 [GEN-2016-094230.00] AMP    12327.7   -84.79
640540 [MEADOWGROVE4230.00] AMP     5010.4   -83.11
652277 [LAKPLAT8    69.000] AMP     4008.4   -87.21
652284 [HURON  8    69.000] AMP     3658.4   -87.70
652488 [PHILTAP4    230.00] AMP     3640.6   -82.69
652503 [BLAIR  4    230.00] AMP     9884.8   -83.76
652510 [FTRANDL7    115.00] AMP    12277.9   -83.37
652520 [OAHE   7    115.00] AMP    11188.7   -86.74
652521 [SULLYBT4    230.00] AMP     6395.4   -83.74
```

```
652523 [SIOUXFL4    230.00] AMP    12944.5   -84.94
652526 [UTICAJC4    230.00] AMP     7834.4   -82.96
652528 [WOONSKT7    115.00] AMP     5199.6   -77.56
652529 [WATERTN3    345.00] AMP    10624.3   -85.51
652531 [WATERTN7    115.00] AMP    12330.6   -85.10
652535 [REDFELD7    115.00] AMP     4089.5   -74.95
652565 [SIOUXCY4    230.00] AMP    19432.4   -84.62
652582 [APPLEDORN 4 230.00] AMP     7115.5   -82.36
652609 [LETCHER7    115.00] AMP     6032.1   -83.26
652630 [WATERTNCAP 4230.00] AMP    14397.9   -84.65
652806 [FTTHOM1-LNX3345.00] AMP     9034.8   -86.64
652807 [FTTHOM2-LNX3345.00] AMP     9034.8   -86.64
655153 [MOS-AMES-ER869.000] AMP     3548.9   -86.78
659120 [BRDLAND3    345.00] AMP     4028.8   -86.66
659122 [STORLA 4    230.00] AMP     5449.4   -84.09
659196 [CARPENTER 8 69.000] AMP     3174.0   -87.93
659295 [SDPRAIRWND 4230.00] AMP     4468.3   -84.79
660003 [HURONWP7    115.00] AMP     9975.9   -81.01
660009 [BTAP WP7    115.00] AMP    14894.2   -82.86
560074 [G16-017-TAP 345.00] AMP     5937.2   -86.53
563230 [GEN-2015-089230.00] AMP     5347.3   -82.18
602004 [SPLT RK4    230.00] AMP    12552.4   -84.94
620314 [BIGSTON4    230.00] AMP    16468.4   -85.17
640133 [COLMBUS4    230.00] AMP    10826.0   -84.80
640349 [SPENCER7    115.00] AMP     4520.8   -74.20
640386 [TWIN CH4    230.00] AMP     8440.2   -82.76
648506 [PR BRZ 4    230.00] AMP     3477.4   -83.88
652175 [G09_001IST  345.00] AMP     6325.5   -86.14
652224 [BLAIR  8    69.000] AMP     2499.8   -87.96
652242 [WATERT18    69.000] AMP     3873.1   -87.11
652285 [SULLYBT8    69.000] AMP     2373.9   -87.79
652291 [REDFELD8    69.000] AMP     2764.5   -83.36
652398 [VFODNES4    230.00] AMP     6980.7   -83.64
652463 [WH SWAN7    115.00] AMP    11975.6   -83.06
652475 [BONESTL7    115.00] AMP     3464.2   -75.31
652476 [EAGLEBT7    115.00] AMP     1935.6   -77.41
652484 [NUNDRWD4    230.00] AMP     3347.0   -82.36
652486 [PHILIP 4    230.00] AMP     3068.5   -82.38
652491 [IRVSIMM7    115.00] AMP     7938.2   -83.75
652500 [ARLNGTN7    115.00] AMP     4293.5   -76.39
652501 [ARMOUR 7    115.00] AMP     4112.5   -75.72
652504 [BROOKNG7    115.00] AMP     7163.0   -81.03
652513 [HANLON 4    230.00] AMP     5900.5   -84.27
652522 [SUMMIT-7    115.00] AMP     4621.9   -75.31
652524 [SIOUXFL7    115.00] AMP    25743.8   -84.07
652536 [RASMUSN4    230.00] AMP     6586.7   -82.42
```

```
652550 [GRANITF4    230.00] AMP    13042.0   -82.55
652564 [SIOUXCY3    345.00] AMP    14873.9   -85.22
652566 [SIOUXCY5    161.00] AMP    20380.7   -84.30
652567 [DENISON4    230.00] AMP     4283.4   -79.61
652568 [GROTONSOUTH 115.00] AMP    17532.5   -85.12
652578 [PAHOJA 4    230.00] AMP     7277.9   -82.55
652600 [ASH TAP     115.00] AMP     8427.9   -83.84
652604 [APPLEDORN 8 69.000] AMP     2500.1   -89.05
652626 [UTICAJC7    115.00] AMP     8767.3   -82.61
652821 [SULLYBT-LNX3230.00] AMP     6395.4   -83.74
652829 [WATERTN-LNX3345.00] AMP    10624.3   -85.51
652833 [GRPRAR2-LNX3345.00] AMP     7296.5   -86.08
655063 [SW341-ER8   69.000] AMP     3604.2   -87.06
655066 [SW352-ER8   69.000] AMP     3642.9   -87.55
655067 [SW353-ER8   69.000] AMP     3646.8   -87.59
655073 [MOS-CRPN-ER869.000] AMP     2432.8   -84.42
655158 [MOS-HYDE-ER869.000] AMP     2112.3   -78.12
655250 [CHMBRLAN-ER869.000] AMP     1580.3   -72.02
655328 [BIGBEND-ER8 69.000] AMP     2778.7   -78.11
655352 [AMES-ER8    69.000] AMP     1260.3   -66.71
655355 [WOONSKT-ER8 69.000] AMP     3550.1   -83.44
655385 [MOS-LKPL-ER869.000] AMP     3993.9   -87.11
655412 [CRPNTR-ER8  69.000] AMP     2814.6   -86.22
655417 [ROSWELL-ER7 115.00] AMP     2602.6   -78.66
658088 [WTREAST7    115.00] AMP     9529.1   -81.23
658094 [WTRPELI7    115.00] AMP     8474.6   -80.53
659123 [STORLA 7    115.00] AMP     6426.8   -81.55
659421 [BRDLAND-LNX3345.00] AMP     4028.8   -86.66
659900 [EAGLE  4    230.00] AMP     7127.7   -81.52
660002 [REDFLD 7    115.00] AMP     4303.3   -79.64
660004 [MITCHEL7    115.00] AMP     5870.1   -79.26
660008 [MITCLNW7    115.00] AMP     5490.8   -79.16
660012 [HURON WP   869.000] AMP     5502.0   -87.18
560347 [G10-051-TAP 230.00] AMP     7041.3   -84.03
587130 [GEN-2016-017345.00] AMP     5891.3   -86.51
587540 [ASGI1606    115.00] AMP     5490.8   -79.16
587750 [GEN-2016-092345.00] AMP     5349.1   -85.74
602008 [MINVALT4    230.00] AMP    12906.0   -82.68
602009 [MNVLTAP4    230.00] AMP    12866.6   -82.67
603009 [GRANT  7    115.00] AMP     3950.0   -76.09
603012 [LAWRENC7    115.00] AMP    28999.5   -84.64
603016 [SPLT RK7    115.00] AMP    36582.4   -84.99
619975 [GRE-WILLMAR4230.00] AMP     5216.3   -80.48
620214 [BIGSTON7    115.00] AMP    12389.5   -84.17
620322 [BSSOUTH4    230.00] AMP    16453.8   -85.34
620325 [BROWNSV4    230.00] AMP     5885.1   -82.09
```

```
635200 [RAUN   3    345.00] AMP    25314.3   -85.69
635223 [PLYMOTH5    161.00] AMP    19932.4   -83.76
640126 [E.COL. 4    230.00] AMP     9260.8   -84.54
640131 [COLMB.W4    230.00] AMP     9391.2   -84.37
640134 [KELLY  7    115.00] AMP    17171.1   -82.34
640305 [ONEILL 7    115.00] AMP     3857.9   -71.21
640343 [SHELCRK4    230.00] AMP    10362.1   -85.14
640387 [TWIN CH7    115.00] AMP    10539.5   -83.14
640404 [WAYSIDE4    230.00] AMP     2714.0   -82.53
652209 [SUMMIT-8    69.000] AMP     2994.6   -80.00
652225 [BROOKNG8    69.000] AMP     2914.4   -86.48
652235 [SIOUXFL8    69.000] AMP     3883.2   -87.07
652243 [FAITH  7    115.00] AMP     2296.4   -78.85
652249 [ARMOUR 8    69.000] AMP     2427.4   -83.83
652259 [EAGLEBE8    69.000] AMP     1631.9   -82.04
652260 [EAGLEBW8    69.000] AMP     2133.4   -81.08
652271 [ARLNGTN8    69.000] AMP     2623.3   -84.06
652278 [HANLON18    69.000] AMP     3009.9   -88.01
652279 [HANLON28    69.000] AMP     3009.9   -88.01
652287 [RASMUSN8    69.000] AMP     3160.0   -87.68
652397 [VFODNES7    115.00] AMP     6272.3   -85.63
652399 [VFODNES8    69.000] AMP     4197.6   -87.94
652474 [AURORA 7    115.00] AMP     4433.7   -76.50
652478 [GREGORY7    115.00] AMP     2112.3   -73.95
652481 [MIDLAND7    115.00] AMP     3253.6   -78.14
652485 [NUNDRWD7    115.00] AMP     5858.4   -82.69
652487 [PHILIP 7    115.00] AMP     5032.2   -81.46
652489 [PIERRE 7    115.00] AMP     7985.4   -83.44
652502 [BERSFRD7    115.00] AMP     3902.6   -75.50
652505 [FLANDRU7    115.00] AMP     4053.9   -74.85
652512 [GROTON 7    115.00] AMP    17532.1   -85.12
652518 [MTVERN 7    115.00] AMP     4242.3   -77.41
652525 [TYNDALL7    115.00] AMP     3767.7   -74.76
652527 [WHITLOK4    230.00] AMP     4798.1   -83.54
652532 [GR PRAIRIE 3345.00] AMP     7296.5   -86.08
652533 [BRISTOL7    115.00] AMP     4606.5   -75.10
652534 [ORDWAY 7    115.00] AMP     9334.6   -77.89
652537 [WHITE  3    345.00] AMP    23604.8   -86.31
652538 [WHITE  7    115.00] AMP     9319.4   -86.28
652551 [GRANITF7    115.00] AMP    17457.5   -82.35
652554 [MORRIS 4    230.00] AMP     4789.8   -81.93
652561 [DENISON5    161.00] AMP     5241.9   -80.83
652563 [SPENCER5    161.00] AMP    10257.9   -82.21
652574 [SIOUXCY8    69.000] AMP    17677.3   -79.60
652583 [DENISON8    69.000] AMP    10977.5   -78.23
652588 [CLEVELD4    230.00] AMP     4769.6   -82.21
```

```
652591 [HANLON 7    115.00] AMP     5484.1   -84.66
652864 [SIOUXCY-LNX3345.00] AMP    14873.9   -85.22
652884 [NUNDRWD-LNX3230.00] AMP     3347.0   -82.36
655040 [MOS-ASTR-ER869.000] AMP     1259.5   -78.07
655054 [MOS-RDFL-ER869.000] AMP     2021.4   -75.36
655056 [SW313-ER8   69.000] AMP     1556.0   -73.86
655059 [MOS-ASHT-ER869.000] AMP     1614.8   -70.13
655064 [SW343-ER8   69.000] AMP     3580.7   -87.12
655072 [SW373-ER8   69.000] AMP     2287.5   -70.33
655080 [MOS-HLTP-ER869.000] AMP     1305.4   -68.15
655108 [MOS-RVLE-ER869.000] AMP     2633.0   -76.48
655111 [SW714-ER8   69.000] AMP     2629.5   -70.22
655231 [HURON-ER8   69.000] AMP     2343.7   -68.79
655236 [MORNINGS-ER869.000] AMP     1861.3   -71.75
655238 [FRANKFRT-ER869.000] AMP     2038.0   -78.12
655294 [MORITZ-ER8  69.000] AMP     2066.6   -82.10
655329 [GANNVALL-ER869.000] AMP      831.5   -61.13
655334 [OKOBOJO-ER8 69.000] AMP     2363.6   -87.70
655373 [MOS-SLY2-ER869.000] AMP     2370.2   -87.75
655377 [SW1145-ER7  115.00] AMP    24492.8   -83.29
655384 [NWPS8645-ER869.000] AMP     1551.9   -73.93
655386 [MOS-RVR1-ER869.000] AMP     2084.1   -75.08
655418 [FREEMAN-ER7 115.00] AMP     2560.8   -77.34
655419 [SW561-ER7   115.00] AMP     5631.7   -79.15
658090 [WTRTNPP     115.00] AMP     8992.0   -80.60
658092 [WTRWEST7    115.00] AMP     8337.7   -80.35
658120 [GARFLD 7    115.00] AMP     6945.8   -80.83
659160 [GROTON 3    345.00] AMP     6102.6   -86.01
659171 [ROBERTS CO 7115.00] AMP     3286.8   -76.07
659275 [GROTONB7    115.00] AMP    17098.4   -85.15
659376 [DRY CREEK  4230.00] AMP     2606.3   -82.69
659420 [ANTELOP-LNX3345.00] AMP    15902.4   -87.40
659424 [LELAND2-LNX3345.00] AMP    16167.5   -86.95
659716 [MAPLETAP-LO7115.00] AMP    13154.6   -74.61
659901 [EAGLE  8    69.000] AMP    13649.1   -82.18
660001 [ABDNSBT7    115.00] AMP     7870.1   -82.79
660005 [TRIPP  7    115.00] AMP     4237.9   -78.77
660007 [MENNOJT7    115.00] AMP     6574.0   -80.55
660026 [NAPA JCT7   115.00] AMP     7941.0   -78.75
```