FEASIBILITY CLUSTER STUDY FOR GENERATOR INTERCONNECTION REQUESTS

FCS-2017-003

Published on 10/31/2017

By SPP Generator Interconnections Dept.

REVISION HISTORY

DATE OR VERSION NUMBER	AUTHOR	CHANGE DESCRIPTION	COMMENTS
10/31/2017	SPP	Report Issued (FCS-2017-003).	
11/1/2017	SPP	Report Issued (FCS-2017-003).	Reposted for Appendix A Correction

CONTENTS

1 INTRODUCTION

Pursuant to the Southwest Power Pool (SPP) Open Access Transmission Tariff (OATT), SPP has conducted this Feasibility Cluster Study (FCS) for generation interconnection requests received during the FCS Queue Cluster Window, which closed on August 31, 2017. The customers will be referred to in this study as the FCS Interconnection Customers. This FCS analyzes the impact of interconnecting new generation totaling 720.0 MW to the SPP Transmission System. The interconnecting SPP Transmission Owners include:

- Kansas City Power and Light (KCPL)
- Western Area Power Administration (WAPA)

The generation interconnection requests included in this System Impact Study are listed in Appendix A by queue number, amount, requested interconnection service type, area, requested interconnection point, proposed interconnection point, and the requested in-service date.

Within the study scope of the Feasibility Cluster Studies, each request was analyzed based on the following number of POI assumptions.

Table 1-1: POI Assumptions

Interconnection Requests	Number of POIs
GEN-2017-108	1 – primary
GEN-2017-109	1 – primary

Two (2) scenario assumption analyses were conducted for the current study to account for all combinations of Point of Interconnections and their appropriate cluster groupings. **Table 1-2** displays the Two (2) analyses that were performed. Interconnection Requests dispatching is explained in further detail in the Model Development Section.

Table 1-2: Scenario Analysis Assumptions

Scenario Number	Scenario Description	Interconnection Requests	Point of Interconnection (POI)
Scenario #1	Group 13 ERIS HVER & Group 13 NRIS	GEN-2017-108	Montrose 161kV
		GEN-2017-109	Tap Dawson-Ft Peck 230kV
Scenario #2	Group 16 ERIS HVER & Group 16 NRIS	GEN-2017-108	Montrose 161kV
		GEN-2017-109	Tap Dawson-Ft Peck 230kV

Higher queued requests through DISIS-2016-001 were included in this analysis.

The primary objective of this Feasibility Cluster Study is to identify the system constraints associated with connecting the generation to the area transmission system. The Feasibility and other subsequent Interconnection Studies are designed to identify attachment facilities, Network Upgrades and other Direct Assignment Facilities needed to accept power into the grid at each specific interconnection receipt point.

If any Interconnection Requests are withdrawn from the higher queued studies including DISIS-2016-001, then potential upgrades tentatively assigned to those Interconnection Requests may be assigned to the Interconnection Requests in this FCS-2017-003 study once these Interconnection Requests execute a Definitive Interconnection System Impact Study Agreement.

2 MODEL DEVELOPMENT (STUDY ASSUMPTIONS)

2.1 INTERCONNECTION REQUESTS INCLUDED IN THE CLUSTER

This FCS includes all interconnection requests that were submitted during the FCS Queue Cluster Window that met all of the requirements of the Generator Interconnection Procedures (GIP) that were in effect at the time this study commenced. Appendix A lists the interconnection requests that are included in this study.

2.2 AFFECTED SYSTEM INTERCONNECTION REQUEST

Affected System Interconnection Requests included in this study are listed in Appendix A with the "ASGI" prefix. Affected System Interconnection Requests were only studied in "cluster" scenarios.

2.3 PREVIOUSLY QUEUED INTERCONNECTION REQUESTS

The previous-queued requests included in this study are listed in Appendix B. In addition to the Base Case Upgrades, the previous-queued requests and associated upgrades were assumed to be in-service and added to the Base Case models. These requests were dispatched as Energy Resource Interconnection Service (ERIS) resources with equal distribution across the SPP footprint. Prior-queued requests that requested Network Resource Interconnection Service (NRIS) were also dispatched in separate NRIS scenarios sinking into the area of the interconnecting transmission owner.

2.4 DEVELOPMENT OF BASE CASES

2.4.1 POWER FLOW

The power flow models used for this study are based on the 2015-series Integrated Transmission Planning models used for the 2016 ITP-Near Term analysis. These models include:

- Year 1 2016 winter peak (16WP)
- Year 2 2017 spring (17G)
- Year 2 2017 summer peak (17SP)
- Year 5 2020 summer (20SP)
- Year 5 2020 light (20L)
- Year 5 2020 winter peak (20WP)
- Year 10 2025 summer peak (25SP)

2.4.2 DYNAMIC STABILITY

Dynamic stability studies performed as part of the PISIS and DISIS Cluster Studies will provide additional guidance as to whether required reactive compensation can be static or a portion must be dynamic (such as a SVC).

2.4.3 SHORT CIRCUIT

The Year 2 and Year 10 dynamic stability summer peak models were used for short-circuit analysis.

2.4.4 BASE CASE UPGRADES

The facilities listed in the table below are part of the current SPP Transmission Expansion Plan, the Balanced Portfolio, or recently approved Priority Projects. These facilities have an approved Notification to Construct (NTC) or are in construction stages and were assumed to be in-service at the time of dispatch and added to the base case models. The DISIS Interconnection Customers have not been assigned advancement costs for the projects listed below.

The FCS Interconnection Customers' Generation Facilities in-service dates may need to be delayed until the completion of the following upgrades. In some cases, the in-service date is beyond the allowable time a customer can delay. If the requests proceed forward into the DISIS then in this case, the Interconnection Customer may move forward after the DISIS with Limited Operation or remain in the DISIS Queue for additional study cycles. If, for some reason, construction on these projects is discontinued, additional restudies will be needed to determine the interconnection needs of the Interconnection Customers during the DISIS.

SPP Notification to Construct (NTC) ID	Project Owner	Upgrade Name	Estimated Date of Upgrade Completion (EOC)
200223	OGE	Tatonga - Woodward District EHV 345 kV Ckt 2	7/1/2018
200223	OGE	Matthewson - Tatonga 345 kV Ckt 2	7/1/2018
200240	OGE	Chisholm - Gracemont 345 kV Ckt 1 (OGE)	3/1/2018
200255	AEP	Chisholm - Gracemont 345kV Ckt 1 (AEP)	3/1/2018
200255	AEP	Chisholm 345/230 kV Substation	3/1/2018
200255	AEP	Chisholm 230 kV	3/1/2018
200360	SPS	IMC #1 Tap - Livingston Ridge 115 kV Ckt 1 Rebuild	11/16/2018
200360	SPS	Intrepid West - Potash Junction 115 kV Ckt 1 Rebuild	11/16/2018
200360	SPS	IMC #1 Tap - Intrepid West 115 kV Ckt 1 Rebuild	11/16/2018
200360	SPS	Cardinal - Targa 115 kV Ckt 1 Rebuild	5/31/2018
200360	SPS	National Enrichment Plant - Targa 115 kV Ckt 1	8/15/2017
200391	OGE	DeGrasse 345 kV Substation	6/1/2017 (RTO Determined Need Date)
200391	OGE	DeGrasse 345/138 kV Transformer	6/1/2017 (RTO Determined Need Date)
200391	OGE	DeGrasse - Knob Hill 138 kV New Line	6/1/2017 (RTO Determined Need Date)
200391	OGE	DeGrasse 138 kV Substation (OGE)	6/1/2017 (RTO Determined Need Date)
200220	NPPD	Cherry Co. (Thedford) - Gentleman 345 kV Ckt 1	10/1/2019

SPP Notification to Construct (NTC) ID	Project Owner	Upgrade Name	Estimated Date of Upgrade Completion (EOC)
200220	NPPD	Cherry Co. (Thedford) Substation 345 kV	10/1/2019
200220	NPPD	Cherry Co. (Thedford) - Holt Co. 345 kV Ckt 1	10/1/2019
200220	NPPD	Holt Co. Substation 345 kV	10/1/2019
200253	NPPD	Neligh 345/115 kV Substation	6/1/2017
200309	SPS	Hobbs 345/230 kV Ckt 1 Transformer	6/1/2018
200309	SPS	Hobbs - Yoakum 345 kV Ckt 1	6/1/2020
200395	SPS	Tuco - Yoakum 345 kV Ckt 1	6/1/2020
200395	SPS	Yoakum 345/230 kV Ckt 1 Transformer	6/1/2020
200256	SPS	Chaves - Price 115 kV Ckt 1 Rebuild	12/30/2017
200256	SPS	CV Pines - Price 115 kV Ckt 1 Rebuild	12/30/2017
200256	SPS	Capitan - CV Pines 115 kV Ckt 1 Rebuild	12/30/2017
200282	SPS	China Draw - Yeso Hills 115 kV Ckt 1	6/1/2018
200282	SPS	Dollarhide - Toboso Flats 115 kV Ckt 1	6/1/2018
200309	SPS	Hobbs - Kiowa 345 kV Ckt 1	6/1/2018
200309	SPS	Kiowa 345 kV Substation	6/1/2018
200309	SPS	Kiowa - North Loving 345 kV Ckt 1	6/1/2018
200309	SPS	North Loving 345 kV Terminal Upgrades	6/1/2018
200309	SPS	China Draw - North Loving 345 kV Ckt 1	6/1/2018
200309	SPS	China Draw 345 kV Ckt 1 Terminal Upgrades	6/1/2018
200309	SPS	China Draw 345/115 kV Ckt 1 Transformer	6/1/2018
200309	SPS	North Loving 345/115 kV Ckt 1 Transformer	6/1/2018
200309	SPS	Kiowa 345/115 kV Ckt 1 Transformer	6/1/2018
200395	SPS	Livingston Ridge 115 kV Substation Conversion	8/31/2017
200411	SPS	Livingston Ridge - Sage Brush 115 kV Ckt 1	6/1/2018
200309	SPS	Sage Brush 115 kV Substation	12/16/2016
200309	SPS	Largarto - Sage Brush 115 kV Ckt 1	12/15/2016
200309	SPS	Lagarto 115 kV Substation	6/1/2018
200309	SPS	Cardinal - Lagarto 115 kV Ckt 1	12/15/2016
200309	SPS	Cardinal 115 kV Substation	12/15/2016
200411	SPS	Ponderosa - Ponderosa Tap 115 kV Ckt 1	6/1/2017
20097	TSMO	Sibley - Mullin Creek 345 kV	12/31/2016
200365	SPS	South Jal - Teague 115kV CKT 1 Rebuild/Re-conductor	6/1/2021
200365	SPS	Teague - National Enrichment Plant 115kV CKT 1	6/1/2018
20097	TSMO	Nebraska City - Mullin Creek 345 kV (GMO)	12/31/2016
20098	OPPD	Nebraska City - Mullin Creek 345 kV (OPPD)	12/31/2016
200395	SPS	Canyon West – Dawn – Panda – Deaf Smith 115kV Ckt 1	12/15/2018
200369	SPS	Canyon East Sub – Randall County Interchange 115kV Ckt 1	12/31/2020
200359	SPS	Carlisle 230/115kV transformer replacement	12/31/2017
200309	SPS	Hobbs – Yoakum – TUCO 345kV project	6/1/2018
200395	SPS	Terry County – Wolfforth 115kV Ckt 1 terminal equipment replacement	6/1/2018
200391	OGE	DeGrasse 345/138kV project	6/1/2017
200396	WFEC	DeGrasse 345/138kV project	6/1/2017
200395	SPS	Harrington East – Potter 230kV Ckt 1 terminal equipment replacement	6/1/2019
200228	WERE	Viola 345/138kV project	6/1/2018
200228	MKEC	Viola 345/138kV project	6/1/2018
200395	SPS	Seminole 230/115kV transformer Ckt 1 & 2 replacement	5/15/2018
200262	SPS	Yoakum County Interchange 230/115kV transformer Ckt 1 & 2 replacement	6/1/2019

2.4.5 CONTINGENT UPGRADES

The following facilities do not yet have approval. These facilities have been assigned to higher-queued interconnection customers. These facilities have been included in the models for this study and are assumed to be in service. This list may not be all-inclusive. The FCS Interconnection Customers, at this time, do not have cost responsibility for these facilities but may later be assigned cost if higher-queued customers terminate their Generation Interconnection Agreement or withdraw from the interconnection queue. The FCS Interconnection Customer Generation Facilities in-service dates may need to be delayed until the completion of the following upgrades.

Assigned Study	Upgrade Name	Estimated Date of Upgrade Completion (EOC)
DISIS-2010-002	Twin Church - Dixon County 230kV Conductor Clearance Increase	11/1/2018
DISIS-2010-002	Buckner - Spearville 345 kV Ckt 1 Upgrade Terminal Equipment	12/31/2017
DISIS-2011-001	Hoskins - Dixon County 230kV Conductor Clearance Increase	11/1/2018
DISIS-2014-002	Plant X - Tolk 230kV circuit #1 Rebuild	5/31/2018
DISIS-2014-002	Plant X - Tolk 230kV circuit #2 Rebuild	5/31/2018
DISIS-2014-002	TUCO Interchange 345/230kV transformer CKT 1 Replacement	6/1/2018
DISIS-2015-001	Kress Interchange – Swisher 115kV circuit #1 Replace Terminal Equipment	TBD
DISIS-2015-001	Oklaunion 345kV Reactive Power Support Install 50Mvar Capacitor Bank(s)	TBD
DISIS-2015-001	(NRIS Only) Renfrow – Renfrow 138kV circuit #1 Replace Terminal Equipment	TBD
DISIS-2015-002	Cleo Corner - Cleo Plant Tap 138kV CKT 1 Replace Terminal Equipment	TBD
DISIS-2015-002	Cleveland - Silver City 138kV CKT 1 Conductor Clearance Increase	TBD
DISIS-2015-002	Cornville Tap - Naples Tap 138kV CKT 1 Rebuild	TBD
DISIS-2015-002	Gavins Point - Yankton Junction 115kV CKT 1 Rebuild	TBD
DISIS-2015-002	GEN-2015-063 Tap - Mathewson 345kV CKT 1 Replace Structures	TBD
DISIS-2015-002	Naples Tap - Payne 138kV CKT 1 Rebuild	TBD
DISIS-2015-002	Norge - Southwest Station 138kV CKT 1	TBD
DISIS-2015-002	Woodward 345/138/13kV Transformer CKT 3	TBD
DISIS-2015-002	DISIS-2015-002-4 Group 2, 6, 8, and 16 upgrades to be provided in DISIS-2015-002-4 restudy report	TBD
DISIS-2016-001	To be provided in DISIS-2016-001 report	TBD

2.4.6 POTENTIAL UPGRADES NOT IN THE BASE CASE

Any potential upgrades that do not have a Notification to Construct (NTC) and are not explicitly listed within this report have not been included in the base case. These upgrades include any identified in the SPP Extra-High Voltage (EHV) overlay plan, or any other SPP planning study other than the upgrades listed above in the previous section.

2.4.7 REGIONAL GROUPINGS

The interconnection requests listed in Appendix A are grouped into two (2) active regional groups based on geographical and electrical impacts. These groupings are shown in Appendix C.

To determine interconnection impacts, two (2) different generation dispatch scenarios of the spring, summer, and winter base case models are developed to accommodate the regional groupings.

2.5 DEVELOPMENT OF ANALYSIS CASES

2.5.1 POWER FLOW

For Variable Energy Resources (VER) (solar/wind) in each power flow case, Energy Resource Interconnection Service (ERIS), is evaluated for the generating plants within a geographical area of the interconnection request(s) for the VERs dispatched at 100% nameplate of maximum generation. The VERs in the remote areas are dispatched at 20% nameplate of maximum generation. These projects are dispatched across the SPP footprint using load factor ratios.

Peaking units are not dispatched in the spring case, or in the "High VER" summer and winter peak cases. To study peaking units' impacts, the Year 1 winter peak and Year 2 summer peak, Year 5 summer and winter peaks, and Year 10 summer peak models are developed with peaking units dispatched at 100% of the nameplate rating and VERs dispatched at 20% of the nameplate rating. Each interconnection request is also modeled separately at 100% nameplate for certain analyses.

All generators (VER and peaking) that requested Network Resource Interconnection Service (NRIS) are dispatched in an additional analysis into the interconnecting Transmission Owner's (T.O.) area at 100% nameplate with Energy Resource Interconnection Service (ERIS) only requests at 80% nameplate. This method allows for identification of network constraints that are common between regional groupings to have affecting requests share the mitigating upgrade costs throughout the cluster.

2.5.2 DYNAMIC STABILITY

Dynamic stability studies performed as part of the PISIS and DISIS Cluster Studies will provide additional guidance as to whether required reactive compensation can be static or a portion must be dynamic (such as a SVC).

2.5.3 SHORT CIRCUIT

The dynamic stability models are used for this analysis.

3 IDENTIFICATION OF NETWORK CONSTRAINTS (SYSTEM PERFORMANCE)

3.1 THERMAL OVERLOADS

Network constraints are found by using PSS/E MUST First Contingency Incremental Transfer Capability (FCITC) analysis on the entire cluster grouping dispatched at the various levels previously described.

For Energy Resource Interconnection Service (ERIS), thermal overloads are determined for system intact (n-0) greater than 100% of Rate A - normal and for contingency (n-1) greater than 100% of Rate B – emergency conditions.

The overloads are then screened to determine which interconnection requests have at least

- 3% Distribution Factor (DF) for system intact conditions (n-0),
- 20% DF upon outage-based conditions (n-1),
- or 3% DF on contingent elements that resulted in a non-converged solution.

Appropriate transmission reinforcements are identified to mitigate the constraints.

Interconnection Requests that requested Network Resource Interconnection Service (NRIS) are also studied in a separate NRIS analysis to determine if any constraint measured greater than or equal to a 3% DF. If so, these constraints are also assigned transmission reinforcements to mitigate the impacts.

3.2 VOLTAGE

Steady State Voltage analysis is performed as part of the PISIS and DISIS Cluster Studies will provide additional guidance as to whether required reactive compensation. Monitored facilities and transmission reinforcement criteria for this analysis will be provided during the PISIS and/or DISIS report

3.3 DYNAMIC STABILITY

Dynamic stability studies performed as part of the PISIS and DISIS Cluster Studies will provide additional guidance as to whether required reactive compensation can be static or a portion must be dynamic (such as a SVC). During the PISIS and/or DISIS Stability issues are considered for transmission reinforcement under ERIS. Generators that fail to meet low voltage ride-through requirements (FERC Order #661-A) or SPP's stability criteria for damping or dynamic voltage recovery are assigned upgrades such that these requirements can be met.

3.4 UPGRADES ASSIGNED

Thermal overloads that require transmission support to mitigate are discussed in Section 8 and listed in Appendix G. All of these upgrades are cost assigned in Appendix E and Appendix F.

Other network constraints not requiring transmission reinforcements are shown in Appendix H. With a defined source and sink in a Transmission Service Request, this list of network constraints can be refined and expanded to account for all Network Upgrade requirements for firm transmission service.

In no way does the list of constraints in Appendix G identify all potential constraints that guarantee operation for all periods of time. It should be noted that although this study analyzed many of the most probable contingencies, it is not an all-inclusive list and cannot account for every operational situation. Because of this, it is likely that the Customer(s) may be required to reduce their generation output to 0 MW, also known as curtailment, under certain system conditions to allow system operators to maintain the reliability of the transmission network.

4 DETERMINATION OF COST ALLOCATED NETWORK UPGRADES

Cost Allocated Network Upgrades of Variable Energy Resources (VER) (solar/wind) generation interconnection requests are determined using the Year 2 spring model. Cost Allocated Network Upgrades of peaking units are determined using the Year 5 summer peak model. A PSS/E and MUST sensitivity analysis is performed to determine the Distribution Factors (DF), a distribution factor with no contingency that each generation interconnection request has on each new upgrade. The impact each generation interconnection request has on each upgrade project is weighted by the size of each request. Finally, the costs due by each request for a particular project are then determined by allocating the portion of each request's impact over the impact of all affecting requests.

For example, assume that there are three Generation Interconnection requests, X, Y, and Z that are responsible for the costs of Upgrade Project '1'. Given that their respective PTDF for the project have been determined, the cost allocation for Generation Interconnection request 'X' for Upgrade Project 1 is found by the following set of steps and formulas:

Determine an impact factor for a given project for all responsible GI requests:

$$Request\ X\ Impact\ Factor\ on\ Upgrade\ Project\ 1 = PTDF(\%)(X) \times MW(X) = X1$$

$$Request\ Y\ Impact\ Factor\ on\ Upgrade\ Project\ 1 = PTDF(\%)(Y) \times MW(Y) = Y1$$

$$Request\ Z\ Impact\ Factor\ on\ Upgrade\ Project\ 1 = PTDF(\%)(Z) \times MW(Z) = Z1$$

Determine each request's Allocation of Cost for that particular project:

$$Request\ X's\ Project\ 1\ Cost\ Allocation\ (\$) = \frac{Network\ Upgrade\ Project\ 1\ Cost\ (\$) \times X1}{X1 + Y1 + Z1}$$

Repeat previous for each responsible GI request for each Project.

The cost allocation of each needed Network Upgrade is determined by the size of each request and its impact on the given project. This allows for the most efficient and reasonable mechanism for sharing the costs of upgrades.

4.1 CREDITS/COMPENSATION FOR AMOUNTS ADVANCED FOR NETWORK UPGRADES

Interconnection Customer shall be entitled to either credits or potentially incremental Long Term Congestion Rights (iLTCR), otherwise known as compensation, in accordance with Attachment Z2 of the SPP Tariff for any Network Upgrades, including any tax gross-up or any other tax-related payments associated with the Network Upgrades, and not refunded to the Interconnection Customer.

5 REQUIRED INTERCONNECTION FACILITIES

The requirement to interconnect the requested generation into the existing and proposed transmission systems in the affected areas of the SPP transmission footprint consist of the necessary cost allocated shared facilities listed in Appendix F by upgrade. The interconnection requirements for the cluster total are listed in **Table 3**, not including the following costs.

- **Costs Not Included** – Costs on Affected Systems for Associated Electric Cooperative Inc. (AECI), Mid-Continent Independent System Operator (MISO), and Minnkota Power Cooperative, Inc (MPC). Impacts to affected systems will be coordinated with the Affected System operators if the Interconnection Request(s) enter into the Definitive Interconnection System Impact Study (DISIS) Queue. Constraints identified to affected system during this analysis are in Appendix H-AS.
- **Costs Not Included** –Potential upgrades required for AC voltage mitigation or transient stability analysis upgrade mitigations. Impacts to AC voltage and transient stability analysis will be performing during the Preliminary Interconnection System Impact Study (PISIS) or DISIS Queue.

Table 5-1: Total Cluster Costs per POI Scenario

Scenario Number		Total Estimated Minimum Cost
Scenario 1	GEN-2017-108	$20,000,000
Scenario 2	GEN-2017-109	$143,200,000

Interconnection Facilities specific to each interconnection request are listed in Appendix E. A preliminary one-line diagram for each request is listed in Appendix D.

For an explanation of how required Network Upgrades and Interconnection Facilities were determined, refer to the section on "Identification of Network Constraints."

5.1 FACILITIES ANALYSIS

If requests proceed to the DISIS queue, the interconnecting Transmission Owner for each Interconnection Request will provide its preliminary analysis of required Transmission Owner Interconnection Facilities and the associated Network Upgrades, shown in Appendix D. This analysis will be limited only to the expected facilities to be constructed by the Transmission Owner at the Point of Interconnection.

5.2 ENVIRONMENTAL REVIEW

For Interconnection Requests that result in an interconnection to, or modification to, the transmission facilities of the Western-UGP, a National Environmental Policy Act (NEPA) Environmental Review will be required. The Interconnection Customer will be required to execute an Environmental Review Agreement per Section 8.6.1 of the GIP.

6 AFFECTED SYSTEMS COORDINATION

Impacts to affected systems will be coordinated with the Affected System operators if the Interconnection Request(s) enter into the DISIS Queue.

The following procedures are in place to coordinate with Affected Systems.

- Impacts on Associated Electric Cooperative Inc. (AECI) – For any observed violations of thermal overloads on AECI facilities, AECI has been notified by SPP to evaluate the violations for impacts on its transmission system. AECI has instructed SPP to notify the affected Interconnection Customers after posting of this study to contact AECI for an Affected System Study Agreement to study further impacts on the AECI system.
- Impacts on Mid Continent Independent System Operation (MISO) – Per SPP's agreement with MISO, MISO will be contacted and provided a list of interconnection requests that proceed to move forward into the Interconnection Facilities Study Queue. MISO will then evaluate the Interconnection Requests for impacts and will be in contact with affected Interconnection Customers. For potential impacts see Appendix H – Affected System.
- Impacts on Minnkota Power Cooperative, Inc (MPC) – MPC will be contacted and provided a list of interconnection requests that proceed to move forward into the Interconnection Facilities Study Queue. MP will then evaluate the Interconnection Requests for impacts. For potential impacts see Appendix H – Affected System.
- Impacts to other affected systems – For any observed violations of thermal overloads or voltage constraints, SPP will contact the owner of the facility for further information.

7 POWER FLOW ANALYSIS

7.1 POWER FLOW ANALYSIS METHODOLOGY

The Direct Current (DC) FCITC function of PSS® MUST was used to simulate single element and special (i.e., breaker-to-breaker, multi-element, etc.) contingencies in portions or all of the modeled control areas of SPP, as well as, other control areas external to SPP and the resulting scenarios analyzed. Single element and multi-element contingencies are evaluated.

7.2 POWER FLOW ANALYSIS

A power flow analysis is conducted for each Interconnection Customer's facility using modified versions of the Year 1 winter peak season, the Year 2 spring, Year 2 summer peak season, Year 5 summer and winter peak seasons, and Year 10 summer peak seasonal models. The output of the Interconnection Customer's facility is offset in each model by a reduction in output of existing online SPP generation. This method allows the request to be studied as an Energy Resource Interconnection Service request (ERIS). Certain requests that are also pursuing Network Resource Interconnection Service (NRIS) have an additional analysis conducted for displacing resources in the interconnecting Transmission Owner's balancing area.

8 POWER FLOW RESULTS

8.1 CLUSTER SCENARIO

The Cluster Scenario considers the Base Case as well as all Interconnection Requests in the DISIS Study Queue and all generating facilities (and with respect to (3) below, any identified Network Upgrades associated with such higher-queued interconnection) that, on the date the DISIS is commenced:

1. are directly connected to the Transmission System;
2. are interconnection to Affected Systems and may have an impact on the Interconnection Request;
3. have a pending higher-queued Interconnection Request to interconnect to the Transmission System; and
4. have no Interconnection Queue Position but have executed a GIA or requested that an unexecuted GIA be filed with FERC.

Constraints and associated mitigations for each Interconnection Request are summarized below. Details are contained in Appendix G. Cost allocation for the Cluster Scenario is found in Appendix E.

8.1.1 CLUSTER GROUP 1 (WOODWARD AREA)

In addition to the 5,822.30 MW of previously queued generation in the area, 0.0 MW of new interconnection service was studied. No new constraints were found in this area.

8.1.2 CLUSTER GROUP 2 (HITCHLAND AREA)

In addition to the 4,031.50 MW of previously queued generation in the area, 0.0 MW of new interconnection service was studied. No new constraints were found in this area.

8.1.3 CLUSTER GROUP 3 (SPEARVILLE AREA)

In addition to the 4,068.33 MW of previously queued generation in the area, 0.0 MW of new interconnection service was studied. No new constraints were found in this area.

8.1.4 CLUSTER GROUP 4 (NORTHWEST KANSAS AREA)

In addition to the 2,021.00 MW of previously queued generation in the area, 0.0 MW of new interconnection service was studied. No new constraints were found in this area.

8.1.5 CLUSTER GROUP 6 (SOUTH TEXAS PANHANDLE/NEW MEXICO AREA)

In addition to the 6,009.92 MW of previously queued generation in the area, 0.0 MW of new interconnection service was studied. The following constraints were found in this area:

8.1.6 CLUSTER GROUP 7 (SOUTHWESTERN OKLAHOMA AREA)

In addition to the 2,647.40 MW of previously queued generation in the area, 0.0 MW of new interconnection service was studied. No new constraints were found in this area.

8.1.7 CLUSTER GROUP 8 (NORTH OKLAHOMA/SOUTH CENTRAL KANSAS AREA)

In addition to the 8,834.76 MW of previously queued generation in the area, 0.0 MW of new interconnection service was studied. No new constraints were found in this area.

8.1.8 CLUSTER GROUP 9 (NEBRASKA AREA)

In addition to the 4,833.30 MW of previously queued generation in the area, 0.0 MW of new interconnection service was studied. No new constraints were found in this area.

8.1.9 CLUSTER GROUP 10 (SOUTHEAST OKLAHOMA/NORTHEAST TEXAS AREA)

In addition to the 0.00 MW of previously queued generation in the area, 0.0 MW of new interconnection service was studied. No new constraints were found in this area.

8.1.10 CLUSTER GROUP 12 (NORTHWEST ARKANSAS AREA)

In addition to the 50.0 MW of previously queued generation in the area, 0.0 MW of new interconnection service was studied. No new constraints were found in this area.

8.1.11 CLUSTER GROUP 13 (NORTHEAST KANSAS/NORTHWEST MISSOURI AREA)

In addition to the 640.70 MW of previously queued generation in the area, 400.0 MW of new interconnection service was studied. The following constraints were found in this area:

POI Scenario 01 Results

Table 8-1 Scenario 01 Group 13 Cluster ERIS Constraints

Monitored Element	Limiting Rate A/B (MVA)	TC %Loading (%MVA)	Contingency	Mitigation
ARCHIE - MONTROSE 161KV CKT 1	223.3	105.1536	CLINTON - MONTROSE 161KV CKT 1	Updated rating sufficient for mitigation

Table 8-2 Scenario 01 Group13 Cluster NRIS Constraints

Monitored Element	Limiting Rate A/B (MVA)	TC %Loading (%MVA)	Contingency	Mitigation
None	0	0	None	None

8.1.12 CLUSTER GROUP 14 (SOUTH CENTRAL OKLAHOMA AREA)

In addition to the 1,595.10 MW of previously queued generation in the area, 0.0 MW of new interconnection service was studied. No new constraints were found in this area.

8.1.13 CLUSTER GROUP 15 (EASTERN SOUTH DAKOTA)

In addition to approximately 3,854.90 MW of previously queued generation in the area, 0.0 MW of new interconnection service was studied. No new constraints were found in this area.

8.1.14 CLUSTER GROUP 16 (WESTERN NORTH DAKOTA)

In addition to approximately 3,757.41 MW of previously queued generation in the area, 320.0 MW of new interconnection service was studied. The following constraints were found in this area:

POI Scenario 02 Results

Table 8-3 Scenario 04 Group 16 Cluster ERIS Constraints

Monitored Element	Limiting Rate A/B (MVA)	TC %Loading (%MVA)	Contingency	Mitigation
BISON - HETINGER 230KV CKT 1	212.8	108.6617	System Intact	Updated rating sufficient for mitigation
BUFFALO - JAMESTOWN 345KV CKT 1	704.9	103.7027	System Intact	MISO Affected System Review
CULBERTSN E7115.00 - WILISTON 115KV CKT 1	118.9	111.677	System Intact	Rebuild approximately 30 miles of 115kV circuit from Culbertson - Williston
DAWSON CREEK - G17109_T(P) 230.00 230KV CKT 1	160	231.5275	System Intact	Rebuild approximately 25 miles of 230kV circuit from GEN-2017-109 Tap - Dawson County
DICKINSON (KW1A 100) 230/115/13.8KV TRANSFORMER CKT 1	99.6	128.1325	System Intact	Install Second Transformer – Previously Allocated
ELLENDALE - OAKES 230KV CKT 1	318.4	104.1055	System Intact	MISO Affected System Review

ELLENDLMVP4 230.00 - J316_SUB 230.00 230KV CKT 1	317.6	103.4521	System Intact	MISO Affected System Review
HURON (BD KU2A) 345/230/13.8KV TRANSFORMER CKT 1	384.1	107.221	System Intact	Replace Existing Transformer – Previously Allocated
BELFIELD - DICKINSON 230KV CKT 1	263.9	108.097	BOWMAN - RHAME 4 230.00 230KV CKT 1	Replace Terminal Equipment
CIRCLE - DAWSON CREEK 115KV CKT 1	77.7	278.5946	DAWSON CREEK - G17109_T(P) 230.00 230KV CKT 1	Build approximately 25 miles of second 230kV circuit from GEN-2017-109 Tap - Dawson County
CIRCLE - G12_012IST 115.00 115KV CKT 1	77.2	299.0518		
COALHILL4 230.00 - FT PECK 230KV CKT 1	175.1	182.2958		
COALHILL4 230.00 - G17109_T(P) 230.00 230KV CKT 1	175.1	182.5243		
CULBERTSN E7115.00 - CULBERTSON 115KV CKT 1	127.9	179.3464		
CULBERTSN E7115.00 - WILISTON 115KV CKT 1	127	248.1984		
CULBERTSON - POPLAR 115KV CKT 1	88	279.7545		
DAWSON CREEK - G17109_T(P) 230.00 230KV CKT 1	176	254.0114	CULBERTSN E7115.00 - WILISTON 115KV CKT 1	
DAWSON CREEK - LEWIS & CLARK 115KV CKT 1	100.9	133.3241	BEAVERHILL4 230.00 - MEDORA 230KV CKT 1	Rebuild approximately 50 miles of 115kV circuit from Dawson County - Lewis & Clark
FT PECK - WOLF POINT 115KV CKT 1	119.9	173.2477	DAWSON CREEK - G17109_T(P) 230.00 230KV CKT 1	Build approximately 25 miles of second 230kV circuit from GEN-2017-109 Tap - Dawson County
FT PECK - WOLF POINT 115KV CKT 2	128	168.7125		
FT PECK 230/115KV TRANSFORMER CKT 1	100	390.56		
G12_012IST 115.00 - WOLF POINT 115KV CKT 1	78.5	199.7044		
LEWIS & CLARK - RICHLAND 115KV CKT 1	101	140.9901	BEAVERHILL4 230.00 - MEDORA 230KV CKT 1	MISO Affected System Review
POPLAR - WOLF POINT 115KV CKT 1	120.7	212.2485	DAWSON CREEK - G17109_T(P) 230.00 230KV CKT 1	Build approximately 25 miles of second 230kV circuit from GEN-2017-109 Tap - Dawson County

Table 8-4 Scenario 04 Group 16 Cluster NRIS Constraints

Monitored Element	Limiting Rate A/B (MVA)	TC %Loading (%MVA)	Contingency	Mitigation
BEULAH - COYOTE 115KV CKT 1	101.9	311.5721	CENTER - COYOTE 345KV CKT 1	MISO Affected System Review
BEULAH - STANTONTAP 7115.00 115KV CKT 1	121	106.9249	CENTER - COYOTE 345KV CKT 1	Rebuild approximately 20 miles of 115kV from Garrison - Stanton Tap
BUFFALO - JAMESTOWN 345KV CKT 1	704.9	115.2725	RIEL - ROSEAU 500KV CKT 1	MISO Affected System Review
CIRCLE - DAWSON CREEK 115KV CKT 1	77.5	276.7628	DAWSON CREEK - G17109_T(P) 230.00 230KV CKT 1	Current Study ERIS Upgrade
CIRCLE - G12_012IST 115.00 115KV CKT 1	77	297.7808		
COALHILL4 230.00 - FT PECK 230KV CKT 1	174.7	182.8849		
COALHILL4 230.00 - G17109_T(P) 230.00 230KV CKT 1	174.7	182.8849		
CULBERTSN E7115.00 - CULBERTSON 115KV CKT 1	127.7	174.0154		
CULBERTSN E7115.00 - WILISTON 115KV CKT 1	125	235.5789		
CULBERTSON - POPLAR 115KV CKT 1	87.9	271.9199		

DAWSON CREEK - FALLON 115KV CKT 1	88	124.4173	DAWSON CREEK - MILES CITY EAST 230KV CKT 1	Rebuild approximately 26 miles of 115kV circuit from Dawson Creek - Fallon
DAWSON CREEK - G17109_T(P) 230.00 230KV CKT 1	176	246.7259	CULBERTSN E7115.00 - WILISTON 115KV CKT 1	Current Study ERIS Upgrade
DAWSON CREEK - LEWIS & CLARK 115KV CKT 1	101	119.1034	BEAVERHILL4 230.00 - MEDORA 230KV CKT 1	Current Study ERIS Upgrade
DICKINSON (KW1A 100) 230/115/13.8KV TRANSFORMER CKT 1	124.2	115.3894	BOWMAN - RHAME 4 230.00 230KV CKT 1	Install second 230/115/13.8kV Transformer – Previously Allocated
ELK CREEK - NEWELL 115KV CKT 1	89.3	101.7209	MAURINE - NUNDRWD-LNX3230.00 230KV CKT 1	G14-001IST Required Network Upgrades – Previously Allocated
ELK CREEK - RAPID CITY 115KV CKT 1	87.2	99.9275		
ELLENDLMVP4 230.00 - J316_SUB 230.00 230KV CKT 1	340.6	136.1066	ELLENDLMVP4 230.00 - MERRCRT4 230.00 230KV CKT 1	MISO Affected System Review
ELLENDLMVP4 230.00 - MERRCRT4 230.00 230KV CKT 1	382.4	114.922	ELLENDLMVP4 230.00 - J316_SUB 230.00 230KV CKT 1	MISO Affected System Review
FT PECK - WOLF POINT 115KV CKT 1	120	167.854	DAWSON CREEK - G17109_T(P) 230.00 230KV CKT 1	Current Study ERIS Upgrade
FT PECK - WOLF POINT 115KV CKT 2	128	163.3681		
FT PECK 230/115KV TRANSFORMER CKT 1	100	381.7088		
FT THOMPSON (FT2 KU1A) 345/230/13.8KV TRANSFORMER CKT 1	299.2	144.438	GR ISLD-LNX3345.00 - HOLT.CO3 345.00 345KV CKT 1	Replace Existing Transformer
FT THOMPSON (FT2 KU1B) 345/230/13.8KV TRANSFORMER CKT 1	299.1	144.6922	GR ISLD-LNX3345.00 - HOLT.CO3 345.00 345KV CKT 1	Replace Existing Transformer
G12_012IST 115.00 - WOLF POINT 115KV CKT 1	78.6	197.317	DAWSON CREEK - G17109_T(P) 230.00 230KV CKT 1	Current Study ERIS Upgrade
G14_001IST 115.00 - NEWELL 115KV CKT 1	88.4	109.7701	MAURINE - NUNDRWD-LNX3230.00 230KV CKT 1	GEN-2014-001IS Required Network Upgrades – Previously Allocated
GARRISON - STANTONTAP 7115.00 115KV CKT 1	121	106.7597	CENTER - COYOTE 345KV CKT 1	Rebuild approximately 20 miles of 115kV from Garrison - Stanton Tap
GLENHAM - L3 HAWDON 230KV CKT 1	209.8	110.7386	FTTHOM1-LNX3345.00 - G16-017-TAP 345.00 345KV CKT 1	Updated rating sufficient for mitigation
HURON (BD KU2A) 345/230/13.8KV TRANSFORMER CKT 1	387	120.5929	FTTHOM1-LNX3345.00 - G16-017-TAP 345.00 345KV CKT 1	Replace Existing Transformer – Previously Allocated
LEWIS & CLARK - RICHLAND 115KV CKT 1	101	111.3473	BEAVERHILL4 230.00 - MEDORA 230KV CKT 1	MISO Affected System Review
MAURINE (MA KV1A) 230/115/13.8KV TRANSFORMER CKT 1	124.8	112.1756	MAURINE - NUNDRWD-LNX3230.00 230KV CKT 1	Replace Existing Transformer
POPLAR - WOLF POINT 115KV CKT 1	120.6	206.1506	DAWSON CREEK - G17109_T(P) 230.00 230KV CKT 1	Current Study ERIS Upgrade
SCOTTSBLUFF - VICTORY HILL 115KV CKT 1'	119.1	104.8437	STEGALL - STEGALL TRANSFORMER 230KV CKT 1	Updated rating sufficient for mitigation
SPLIT ROCK - WHITE 345KV CKT 1	712.5	107.513	LAKEFIELD 3 - LKFLDXL3 345KV CKT 1	Updated rating sufficient for mitigation

Upgrades constructed by WAPA could be subject to NEPA as outlined in Section 5.2 of this report.

8.1.15 CLUSTER GROUP 17 (WESTERN SOUTH DAKOTA)

In addition to approximately 533.9 MW of previously queued generation in the area, 0.0 MW of new interconnection service was studied. No new constraints were found in this area.

8.1.16 CLUSTER GROUP 18 (EASTERN NORTH DAKOTA)

In addition to approximately 281.50 MW of previously queued generation in the area, 0.0 MW of new interconnection service was studied. No new constraints were found in this area.

8.2 STAND-ALONE SCENARIO

Not applicable to the FCS queue, however if requests proceed to the DISIS Queue the following Stand-Alone Scenario will be evaluated.

The Stand-Alone Scenario considers the Base Case as well as all generating facilities (and with respect to (3) below, any identified Network Upgrades associated with such higher-queued interconnection) that, on the date the DISIS is commenced:

1. are directly connected to the Transmission System;
2. are interconnection to Affected Systems and may have an impact on the Interconnection Request;
3. have a pending higher-queued Interconnection Request to interconnect to the Transmission System; and
4. have no Interconnection Queue Position but have executed a GIA or requested that an unexecuted GIA be filed with FERC.

8.3 CURTAILMENT AND SYSTEM RELIABILITY

In no way does this study guarantee operation for all periods of time. It should be noted that although this study analyzed many of the most probable contingencies, it is not an all-inclusive list and cannot account for every operational situation. Because of this, it is likely that the Customer(s) may be required to reduce their generation output to 0 MW, also known as curtailment, under certain system conditions to allow system operators to maintain the reliability of the transmission network.

9 STABILITY & SHORT CIRCUIT ANALYSIS

Stability is not applicable to the FCS queue. Short Circuit Analysis was performed for each generators POI. The Short Circuit Analyses results are in Appendix I: Short Circuit Analysis.

10 CONCLUSION

The minimum cost of interconnecting all new generation interconnection requests included in this FCS is listed in Table 4, not including the exceptions noted in Section 5.

Table 10-1 Total Cluster Costs per POI Scenario

Scenario Number	Total Estimated Minimum Cost
Scenario #1	$20,000,000
Scenario #2	$143,200,000

Allocated costs for Network Upgrades and Transmission Owner Interconnection Facilities are listed in Appendix E and F. For Interconnection Requests that result in an interconnection to, or modification of, the transmission facilities of the Western-UGP (WAPA), a National Environmental Policy Act (NEPA) Environmental Review will be required. The Interconnection Customer will be required to execute an Environmental Review Agreement per Section 8.6.1 of the GIP.

These costs do not include the cost of upgrades of other transmission facilities listed in Appendix H which are Network Constraints. These interconnection costs do not include any cost of any Network Upgrades that are identified as required through the short circuit analysis. Potential over-duty circuit breakers capability will be identified by the Transmission Owner in the Interconnection Facilities Study.

Further refinement of total estimated interconnection costs will be provided, should the Interconnection Customer meet the requirements for acceptance and choose to move into the Interconnection Facilities Study following the posting of this FCS. The Interconnection Facilities Study may include additional study analysis, additional facility upgrades not yet identified by this FCS, such as circuit breaker replacements and affected system facilities, and further refinement of existing cost estimates.

The required interconnection costs listed in Appendices E, and F, and other upgrades associated with Network Constraints do not include all costs associated with the deliverability of the energy to final customers. These costs are determined by separate studies if the Customer submits a Transmission Service Request (TSR) through SPP's Open Access Same Time Information System (OASIS) as required by Attachment Z1 of the SPP Open Access Transmission Tariff (OATT).

11 APPENDICES

11.1 A: GENERATION INTERCONNECTION REQUESTS CONSIDERED FOR IMPACT STUDY

A: Generation Interconnection Requests Considered for Study

Request	Amount	Service	Area	Requested Point of Interconnection	Proposed Point of Interconnection	Requested In-Service Date	In Service Date Delayed Until no earlier than*
GEN-2017-108	400.00	ER/NR	KCPL	Montrose 161kV	Montrose 161kV	12/1/2019	TBD
GEN-2017-109	320.00	ER/NR	WAPA	Tap Dawson County - Fort Peck 230kV	Tap Dawson County - Fort Peck 230kV	12/31/2020	TBD
Total:	**720.00**						

*In-Service Date for each request is to be determined after the Interconnection Facility Study is completed.

11.2 B: PRIOR-QUEUED INTERCONNECTION REQUESTS

B: Prior Queued Interconnection Requests

Request	Amount	Area	Requested/Proposed Point of Interconnection	Status or In-Service Date
ASGI-2010-006	150.00	AECI	Remington 138kV	AECI queue Affected Study
ASGI-2010-010	42.20	SPS	Lovington 115kV	Lea County Affected Study
ASGI-2010-020	30.00	SPS	Tap LE-Tatum - LE-Crossroads 69kV	Lea County Affected Study
ASGI-2010-021	15.00	SPS	Tap LE-Saunders Tap - LE-Anderson 69kV	Lea County Affected Study
ASGI-2011-001	27.30	SPS	Lovington 115kV	On-Line
ASGI-2011-002	20.00	SPS	Herring 115kV	On-Line
ASGI-2011-003	10.00	SPS	Hendricks 69kV	On-Line
ASGI-2011-004	20.00	SPS	Pleasant Hill 69kV	Under Study (DISIS-2011-002)
ASGI-2012-002	18.15	SPS	FE-Clovis Interchange 115kV	Under Study (DISIS-2012-002)
ASGI-2012-006	22.50	SUNCMKEC	Tap Hugoton - Rolla 69kV	Under Study (DISIS-2012-001)
ASGI-2013-001	11.50	SPS	PanTex South 115kV	Under Study (DISIS-2013-001)
ASGI-2013-002	18.40	SPS	FE Tucumcari 115kV	Under Study (DISIS-2013-001)
ASGI-2013-003	18.40	SPS	FE Clovis 115kV	Under Study (DISIS-2013-001)
ASGI-2013-004	36.60	SUNCMKEC	Morris 115kV	Under Study (DISIS-2013-002)
ASGI-2013-005	1.65	SPS	FE Clovis 115kV	Under Study (DISIS-2013-002)
ASGI-2013-006	2.00	SPS	SP-Erskine 115kV	
ASGI-2014-001	2.50	SPS	SP-Erskine 115kV	Under Study (DISIS-2014-001)
ASGI-2014-014	56.40	GRDA	Ferguson 69kV	Under Study (DISIS-2014-002)
ASGI-2015-001	6.13	SUNCMKEC	Ninnescah 115kV	Under Study (DISIS-2015-001)
ASGI-2015-002	2.00	SPS	SP-Yuma 69kV	Under Study (DISIS-2015-001)
ASGI-2015-004	56.36	GRDA	Coffeyville City 69kV	Under Study (DISIS-2015-001)
ASGI-2015-006	9.00	SWPA	Tupelo 138kV	Under Study (DISIS-2015-002)
ASGI-2016-001	2.50	SPS	Wolfforth 115kV	DISIS STAGE
ASGI-2016-002	0.35	SPS	SP-Yuma 115kV	DISIS STAGE
ASGI-2016-003	6.00	KCPL	Paola 161kV	DISIS STAGE
ASGI-2016-004	9.60	SPS	Palo Duro 115kV	DISIS STAGE
ASGI-2016-005	20.00	WAPA	Tap White Lake - Stickeny 69kV	Northwester Queued Request
ASGI-2016-006	20.00	WAPA	Mitchall	Northwester Queued Request
ASGI-2016-007	20.00	WAPA	Kimball 69kV	Northwester Queued Request
G176	100.00	XEL	Yankee 115kV	
G255	100.00	XEL	Yankee 115kV	MISO Queued Request
G380	150.00	OTP	Rugby 115kV	MISO Queued Request
G408	12.00	XEL	Tap McHenry - Souris 115kV	MISO Queued Request
G502	50.60	MP	Milton Young 230kV	MISO Queued Request
G586	30.00	XEL	Yankee 115kV	
G645	50.00	GRE	Ladish 115kV	MISO Queued Request
G723	10.00	MDU	Haskett 115kV	MISO Queued Request
G736	200.00	OTP	Big Stone South 230kV	
G752	150.00	MDU	Tap Bison - Hettinger 230kV	MISO Queued Request
G788	49.00	GRE	Ladish 115kV	MISO Queued Request
G830	99.00	GRE	GRE McHenry 115kV	MISO Queued Request
GEN-2001-014	96.00	WFEC	Ft Supply 138kV	On-Line
GEN-2001-026	74.30	WFEC	Washita 138kV	On-Line
GEN-2001-033	180.00	SPS	San Juan Tap 230kV	On-Line at 120MW
GEN-2001-036	80.00	SPS	Norton 115kV	On-Line
GEN-2001-037	100.00	OKGE	FPL Moreland Tap 138kV	On-Line

Request	Amount	Area	Requested/Proposed Point of Interconnection	Status or In-Service Date
GEN-2001-039A	105.00	SUNCMKEC	Shooting Star Tap 115kV	On-Line
GEN-2001-039M	100.00	SUNCMKEC	Central Plains Tap 115kV	On-Line
GEN-2002-004	200.00	WERE	Latham 345kV	On-Line at 150MW
GEN-2002-005	120.00	WFEC	Red Hills Tap 138kV	On-Line
GEN-2002-008	240.00	SPS	Hitchland 345kV	On-Line at 120MW
GEN-2002-008IS	40.50	WAPA	Edgeley 115kV [Pomona 115kV]	Commercial Operation
GEN-2002-009	80.00	SPS	Hansford 115kV	On-Line
GEN-2002-009IS	40.00	WAPA	Ft Thompson 69kV [Hyde 69kV]	Commercial Operation
GEN-2002-022	240.00	SPS	Bushland 230kV	On-Line
GEN-2002-023N	0.80	NPPD	Harmony 115kV	On-Line
GEN-2002-025A	150.00	SUNCMKEC	Spearville 230kV	On-Line
GEN-2003-004	100.00	WFEC	Washita 138kV	On-Line
GEN-2003-005	100.00	WFEC	Anadarko - Paradise (Blue Canyon) 138kV	On-Line
GEN-2003-006A	200.00	SUNCMKEC	Elm Creek 230kV	On-Line
GEN-2003-019	250.00	MIDW	Smoky Hills Tap 230kV	On-Line
GEN-2003-020	160.00	SPS	Martin 115kV	On-Line
GEN-2003-021N	75.00	NPPD	Ainsworth Wind Tap 115kV	On-Line
GEN-2003-022	120.00	AEPW	Weatherford 138kV	On-Line
GEN-2004-014	154.50	SUNCMKEC	Spearville 230kV	On-Line at 100MW
GEN-2004-020	27.00	AEPW	Weatherford 138kV	On-Line
GEN-2004-023	20.60	WFEC	Washita 138kV	On-Line
GEN-2004-023N	75.00	NPPD	Columbus Co 115kV	On-Line
GEN-2005-003	30.60	WFEC	Washita 138kV	On-Line
GEN-2005-003IS	100.00	WAPA	Nelson 115kV	Commercial Operation
GEN-2005-008	120.00	OKGE	Woodward 138kV	On-Line
GEN-2005-008IS	50.00	WAPA	Hilken 230kV [Ecklund 230kV]	Commercial Operation
GEN-2005-012	250.00	SUNCMKEC	Ironwood 345kV	On-Line at 160MW
GEN-2005-013	201.00	WERE	Caney River 345kV	On-Line
GEN-2006-001IS	10.00	XEL	Marshall 115kV	Commercial Operation
GEN-2006-002	101.00	AEPW	Sweetwater 230kV	On-Line
GEN-2006-002IS	51.00	WAPA	Wessington Springs 230kV	Commercial Operation
GEN-2006-006IS	10.00	XEL	Marshall 115kV	Commercial Operation
GEN-2006-015IS	50.00	WAPA	Hilken 230kV [Ecklund 230kV]	Commercial Operation
GEN-2006-018	170.00	SPS	TUCO Interchange 230kV	On-Line
GEN-2006-020N	42.00	NPPD	Bloomfield 115kV	On-Line
GEN-2006-020S	18.90	SPS	DWS Frisco 115kV	On-Line
GEN-2006-021	101.00	SUNCMKEC	Flat Ridge Tap 138kV	On-Line
GEN-2006-024S	19.80	WFEC	Buffalo Bear Tap 69kV	On-Line
GEN-2006-026	502.00	SPS	Hobbs 230kV & Hobbs 115kV	On-Line
GEN-2006-031	75.00	MIDW	Knoll 115kV	On-Line
GEN-2006-035	225.00	AEPW	Sweetwater 230kV	On-Line at 132MW
GEN-2006-037N1	75.00	NPPD	Broken Bow 115kV	On-Line
GEN-2006-038N005	80.00	NPPD	Broken Bow 115kV	On-Line
GEN-2006-038N019	80.00	NPPD	Petersburg North 115kV	On-Line
GEN-2006-043	99.00	AEPW	Sweetwater 230kV	On-Line
GEN-2006-044	370.00	SPS	Hitchland 345kV	On-Line at 120MW
GEN-2006-044N	40.50	NPPD	North Petersburg 115kV	On-Line
GEN-2006-046	131.00	OKGE	Dewey 138kV	On-Line
GEN-2007-011N08	81.00	NPPD	Bloomfield 115kV	On-Line
GEN-2007-013IS	50.00	WAPA	Wessington Springs 230kV	Commercial Operation

Request	Amount	Area	Requested/Proposed Point of Interconnection	Status or In-Service Date
GEN-2007-014IS	100.00	WAPA	Wessington Springs 230kV	Commercial Operation
GEN-2007-015IS	100.00	WAPA	Hilken 230kV [Ecklund 230kV]	Commercial Operation
GEN-2007-017IS	166.00	WAPA	Ft Thompson-Grand Island 345kV	On Schedule
GEN-2007-018IS	234.00	WAPA	Ft Thompson-Grand Island 345kV	On Schedule
GEN-2007-020IS	16.00	WAPA	Nelson 115kV	Commercial Operation
GEN-2007-021	201.00	OKGE	Tatonga 345kV	On-Line
GEN-2007-023IS	50.00	WAPA	Formit-Summit 115kV	On Suspension
GEN-2007-025	300.00	WERE	Viola 345kV	On-Line
GEN-2007-040	200.00	SUNCMKEC	Buckner 345kV	On-Line at 132MW
GEN-2007-043	200.00	OKGE	Minco 345kV	On-Line
GEN-2007-044	300.00	OKGE	Tatonga 345kV	On-Line at 199MW
GEN-2007-046	200.00	SPS	Hitchland 115kV	On-Line
GEN-2007-050	170.00	OKGE	Woodward EHV 138kV	On-Line at 150MW
GEN-2007-052	150.00	WFEC	Anadarko 138kV	On-Line
GEN-2007-062	425.00	OKGE	Woodward EHV 345kV	On-Line for 225MW, On Schedule and 2017
GEN-2008-003	101.00	OKGE	Woodward EHV 138kV	On-Line
GEN-2008-008IS	5.00	WAPA	Nelson 115kV	Commercial Operation
GEN-2008-013	300.00	OKGE	Hunter 345kV	On-Line at 235MW
GEN-2008-018	250.00	SPS	Finney 345kV	On-Line
GEN-2008-021	42.00	WERE	Wolf Creek 345kV	On-Line
GEN-2008-022	300.00	SPS	Crossroads 345kV	On-Line
GEN-2008-023	150.00	AEPW	Hobart Junction 138kV	On-Line
GEN-2008-037	101.00	WFEC	Slick Hills 138kV	On-Line
GEN-2008-044	197.80	OKGE	Tatonga 345kV	On-Line
GEN-2008-047	300.00	OKGE	Beaver County 345kV	On-Line
GEN-2008-051	322.00	SPS	Potter County 345kV	On-Line at 161MW
GEN-2008-079	99.20	SUNCMKEC	Crooked Creek 115kV	On-Line
GEN-2008-086N02	201.00	NPPD	Meadow Grove 230kV	On-Line
GEN-2008-092	200.60	MIDW	Post Rock 230kV	On-Line
GEN-2008-098	100.80	WERE	Waverly 345kV	On-Line
GEN-2008-119O	60.00	OPPD	S1399 161kV	On-Line
GEN-2008-123N	89.70	NPPD	Tap Pauline - Guide Rock (Rosemont) 115kV	On Schedule for 2017
GEN-2008-124	200.10	SUNCMKEC	Ironwood 345kV	On-Line
GEN-2008-129	80.00	KCPL	Pleasant Hill 161kV	On-Line
GEN-2009-001IS	200.00	WAPA	Groton-Watertown 345kV	On Schedule
GEN-2009-006IS	90.00	WAPA	Mission 115kV	On Suspension
GEN-2009-007IS	100.00	WAPA	Mission 115kV	On Suspension
GEN-2009-008	199.50	MIDW	South Hays 230kV	On-Line
GEN-2009-018IS	100.00	WAPA	Groton 115kV	Commercial Operation
GEN-2009-020	48.30	MIDW	Walnut Creek 69kV	On-Line
GEN-2009-020AIS	130.50	WAPA	Tripp Junction 115kV	Commercial Operation
GEN-2009-025	59.80	OKGE	Nardins 69kV	On-Line
GEN-2009-026IS	110.00	WAPA	Dickenson-Heskett 230kV	On Schedule
GEN-2009-040	73.80	WERE	Marshall 115kV	On-Line
GEN-2010-001	300.00	OKGE	Beaver County 345kV	On-Line
GEN-2010-001IS	99.00	WAPA	Bismarck-Glenham 230kV	On Schedule
GEN-2010-003	100.80	WERE	Waverly 345kV	On-Line
GEN-2010-003IS	34.00	WAPA	Wessington Springs 230kV	Commercial Operation
GEN-2010-005	299.20	WERE	Viola 345kV	On-Line at 170MW

Request	Amount	Area	Requested/Proposed Point of Interconnection	Status or In-Service Date
GEN-2010-006	205.00	SPS	Jones 230kV	On-Line
GEN-2010-007IS	172.50	WAPA	Antelope Valley 345kV	On Suspension
GEN-2010-009	165.60	SUNCMKEC	Buckner 345kV	On-Line
GEN-2010-011	29.70	OKGE	Tatonga 345kV	On-Line
GEN-2010-014	358.80	SPS	Hitchland 345kV	On Schedule for 2018
GEN-2010-036	4.60	WERE	6th Street 115kV	On-Line
GEN-2010-040	300.00	OKGE	Cimarron 345kV	On-Line
GEN-2010-041	10.50	OPPD	S1399 161kV	On-Line
GEN-2010-045	197.80	SUNCMKEC	Buckner 345kV	On Suspension
GEN-2010-046	56.00	SPS	TUCO Interchange 230kV	On Schedule for 2016
GEN-2010-051	200.00	NPPD	Tap Hoskins - Twin Church (Dixon County) 230kV	On Schedule for 2018
GEN-2010-055	4.50	AEPW	Wekiwa 138kV	On-Line
GEN-2010-057	201.00	MIDW	Rice County 230kV	On-Line
GEN-2011-008	600.00	SUNCMKEC	Clark County 345kV	On-Line
GEN-2011-010	100.80	OKGE	Minco 345kV	On-Line
GEN-2011-011	50.00	KCPL	Iatan 345kV	On-Line
GEN-2011-014	201.00	OKGE	Tap Hitchland - Woodward Dbl Ckt (GEN-2011-014 Tap) 345kV	On-Line
GEN-2011-016	200.10	SUNCMKEC	Ironwood 345kV	On Suspension
GEN-2011-018	73.60	NPPD	Steele City 115kV	On-Line
GEN-2011-019	175.00	OKGE	Woodward 345kV	On Schedule for 2017
GEN-2011-020	165.60	OKGE	Woodward 345kV	On Schedule for 2017
GEN-2011-022	299.00	SPS	Hitchland 345kV	On Schedule for 2016 (150MW) and 2017 (149MW)
GEN-2011-025	80.00	SPS	Tap Floyd County - Crosby County 115kV	On Schedule for 2016
GEN-2011-027	120.00	NPPD	Tap Hoskins - Twin Church (Dixon County) 230kV	On Schedule for 2018
GEN-2011-037	7.00	WFEC	Blue Canyon 5 138kV	On-Line
GEN-2011-040	111.00	OKGE	Carter County 138kV	On-Line
GEN-2011-045	205.00	SPS	Jones 230kV	On-Line
GEN-2011-046	27.00	SPS	Lopez 115kV	On-Line
GEN-2011-048	175.00	SPS	Mustang 230kV	On-Line
GEN-2011-049	250.70	OKGE	Border 345kV	On Schedule for 2016
GEN-2011-050	109.80	AEPW	Santa Fe Tap 138kV	On-Line
GEN-2011-054	300.00	OKGE	Cimarron 345kV	On-Line
GEN-2011-056	3.60	NPPD	Jeffrey 115kV	On-Line
GEN-2011-056A	3.60	NPPD	John 1 115kV	On-Line
GEN-2011-056B	4.50	NPPD	John 2 115kV	On-Line
GEN-2011-057	150.40	WERE	Creswell 138kV	On-Line
GEN-2012-001	61.20	SPS	Cirrus Tap 230kV	On-Line
GEN-2012-004	41.40	OKGE	Carter County 138kV	On-Line
GEN-2012-006IS	125.01	WAPA	Williston-Ch. Creek 230kV	On Schedule
GEN-2012-007	120.00	SUNCMKEC	Rubart 115kV	On-Line
GEN-2012-009IS	99.00	WAPA	Fort Randall 115kV	On Suspension
GEN-2012-012IS	75.00	WAPA	Wolf Point-Circle 115kV	On Suspension
GEN-2012-014IS	99.50	WAPA	Groton 115kV	On Schedule
GEN-2012-020	478.00	SPS	TUCO 230kV	On Schedule for 2016
GEN-2012-021	4.80	LES	Terry Bundy Generating Station 115kV	On-Line
GEN-2012-024	180.00	SUNCMKEC	Clark County 345kV	On Schedule for 2017
GEN-2012-028	74.80	WFEC	Gotebo 69kV	On-Line
GEN-2012-032	300.00	OKGE	Open Sky 345kV	On-Line

Request	Amount	Area	Requested/Proposed Point of Interconnection	Status or In-Service Date
GEN-2012-033	98.10	OKGE	Tap and Tie South 4th - Bunch Creek & Enid Tap - Fairmont (GEN-2012-033T) 138kV	On-Line
GEN-2012-034	7.00	SPS	Mustang 230kV	On-Line
GEN-2012-035	7.00	SPS	Mustang 230kV	On-Line
GEN-2012-036	7.00	SPS	Mustang 230kV	On-Line
GEN-2012-037	203.00	SPS	TUCO 345kV	On-Line
GEN-2012-041	121.50	OKGE	Ranch Road 345kV	On-Line
GEN-2013-001IS	90.00	WAPA	Summit-Watertown 115kV	On Suspension
GEN-2013-002	50.60	LES	Tap Sheldon - Folsom & Pleasant Hill (GEN-2013-002 Tap) 115kV CKT 2	On Suspension
GEN-2013-007	100.30	OKGE	Tap Prices Falls - Carter 138kV	On-Line
GEN-2013-008	1.20	NPPD	Steele City 115kV	On-Line
GEN-2013-009IS	19.50	WAPA	Redfield NW 115kV	Commercial Operation
GEN-2013-010	99.00	SUNCMKEC	Tap Spearville - Post Rock (North of GEN-2011-017 Tap) 345kV	On Suspension
GEN-2013-011	30.00	AEPW	Turk 138kV	On-Line
GEN-2013-012	147.00	OKGE	Redbud 345kV	On-Line
GEN-2013-016	203.00	SPS	TUCO 345kV	On Schedule for 2017
GEN-2013-019	73.60	LES	Tap Sheldon - Folsom & Pleasant Hill (GEN-2013-002 Tap) 115kV CKT 2	On Suspension
GEN-2013-022	25.00	SPS	Norton 115kV	On-Line
GEN-2013-027	150.00	SPS	Tap Tolk - Yoakum 230kV	On Schedule for 2018
GEN-2013-028	559.50	GRDA	Tap N Tulsa - GRDA 1 345kV	On Schedule for 2017
GEN-2013-029	300.00	OKGE	Renfrow 345kV	On-Line for 151.6MW
GEN-2013-030	300.00	OKGE	Beaver County 345kV	On Schedule for 2016 (200MW) and 2017 (100MW)
GEN-2013-032	204.00	NPPD	Antelope 115kV	On Schedule for 2017
GEN-2013-033	28.00	MIDW	Knoll 115kV	On-Line
GEN-2014-001	200.60	WERE	Tap Wichita - Emporia Energy Center (GEN-2014-001 Tap) 345kV	On Suspension
GEN-2014-001IS	103.70	WAPA	Newell-Maurine 115kV	On Suspension
GEN-2014-002	10.50	OKGE	Tatonga 345kV (GEN-2007-021 POI)	On-Line
GEN-2014-003	15.80	OKGE	Tatonga 345kV (GEN-2007-044 POI)	On-Line
GEN-2014-003IS	91.00	WAPA	Culbertson 115kV	On Schedule
GEN-2014-004	4.00	NPPD	Steele City 115kV (GEN-2011-018 POI)	On-Line
GEN-2014-004IS	384.20	WAPA	Charlie Creek 345kV	IA Pending
GEN-2014-005	5.70	OKGE	Minco 345kV (GEN-2011-010 POI)	On-Line
GEN-2014-006IS	125.00	WAPA	Williston 115kV	On Schedule
GEN-2014-010IS	150.00	WAPA	Neset 115kV	On Schedule
GEN-2014-012	225.00	SPS	Tap Hobbs Interchange - Andrews 230kV	On Suspension
GEN-2014-013	73.50	NPPD	Meadow Grove (GEN-2008-086N2 Sub) 230kV	On-Line
GEN-2014-014IS	151.50	WAPA	Belfield-Rhame 230kV	On Schedule
GEN-2014-020	100.00	AEPW	Tuttle 138kV	On Schedule for 2017
GEN-2014-021	300.00	KCPL	Tap Nebraska City - Mullin Creek 345kV	On Schedule for 2017
GEN-2014-025	2.40	MIDW	Walnut Creek 69kV	On-Line
GEN-2014-028	35.00	EMDE	Riverton 161kV	On-Line
GEN-2014-031	35.80	NPPD	Meadow Grove 230kV	On-Line
GEN-2014-032	10.20	NPPD	Meadow Grove 230kV	On Schedule for 2016
GEN-2014-033	70.00	SPS	Chaves County 115kV	On-Line
GEN-2014-034	70.00	SPS	Chaves County 115kV	On-Line
GEN-2014-035	30.00	SPS	Chaves County 115kV	On Schedule for 2018

Request	Amount	Area	Requested/Proposed Point of Interconnection	Status or In-Service Date
GEN-2014-037	200.00	SPS	Tap Hitchland - Beaver County Dbl Ckt (Optima) 345kV	FACILITY STUDY STAGE
GEN-2014-039	73.40	NPPD	Friend 115kV	On Schedule for 2017
GEN-2014-040	320.40	SPS	Castro 115kV	On-Line
GEN-2014-041	120.80	SUNCMKEC	Arnold 115kV	On Suspension
GEN-2014-047	40.00	SPS	Crossroads 345kV	On Schedule for 2017
GEN-2014-056	250.00	OKGE	Minco 345kV	On Schedule for 2016
GEN-2014-057	250.00	AEPW	Tap Lawton - Sunnyside (Terry Road) 345kV	On-Line
GEN-2014-064	248.40	OKGE	Otter 138kV	On Suspension
GEN-2015-001	200.00	OKGE	Ranch Road 345kV	On-Line
GEN-2015-004	52.90	OKGE	Border 345kV	On Schedule for 2017
GEN-2015-005	200.10	KCPL	Tap Nebraska City - Sibley 345kV	On-Line
GEN-2015-007	160.00	NPPD	Hoskins 345kV	On Schedule for 2019
GEN-2015-013	120.00	WFEC	Synder 138kV	FACILITY STUDY STAGE
GEN-2015-014	150.00	SPS	Tap Cochran - Lehman 115kV	FACILITY STUDY STAGE
GEN-2015-015	154.60	OKGE	Tap Medford Tap - Coyote 138kV	On Schedule for 2017
GEN-2015-016	200.00	KCPL	Tap Marmaton - Centerville 161kV	On Schedule for 2018
GEN-2015-020	100.00	SPS	Oasis 115kV	FACILITY STUDY STAGE
GEN-2015-021	20.00	SUNCMKEC	Johnson Corner 115kV	On Schedule for 2019
GEN-2015-022	112.00	SPS	Swisher 115kV	FACILITY STUDY STAGE
GEN-2015-023	300.70	NPPD	Holt County 345kV	On Schedule for 2020
GEN-2015-024	220.00	WERE	Tap Thistle - Wichita 345kV Dbl CKT	On-Line
GEN-2015-025	220.00	WERE	Tap Thistle - Wichita 345kV Dbl CKT	On-Line
GEN-2015-029	161.00	OKGE	Tatonga 345kV	On Suspension
GEN-2015-030	200.10	OKGE	Sooner 345kV	On Suspension
GEN-2015-031	150.50	SPS	Tap Amarillo South - Swisher 230kV	FACILITY STUDY STAGE
GEN-2015-034	200.00	OKGE	Ranch Road 345kV	FACILITY STUDY STAGE
GEN-2015-036	303.60	OKGE	Johnston County 345kV	DISIS STAGE
GEN-2015-041	5.00	SPS	TUCO Interchange 345kV	DISIS STAGE
GEN-2015-045	20.00	AEPW	Tap Lawton - Sunnyside (Terry Road) 345kV	FACILITY STUDY STAGE
GEN-2015-046	300.00	WAPA	Tande 345kV	FACILITY STUDY STAGE
GEN-2015-047	300.00	OKGE	Sooner 345kV	FACILITY STUDY STAGE
GEN-2015-048	200.00	OKGE	Cleo Corner 138kV	FACILITY STUDY STAGE
GEN-2015-052	300.00	WERE	Tap Open Sky - Rose Hill 345kV	FACILITY STUDY STAGE
GEN-2015-053	50.00	NPPD	Antelope 115kV	FACILITY STUDY STAGE
GEN-2015-055	40.00	WFEC	Erick 138kV	FACILITY STUDY STAGE
GEN-2015-056	101.20	SPS	Crossroads 345kV	FACILITY STUDY STAGE
GEN-2015-057	100.00	OKGE	Minco 345kV	FACILITY STUDY STAGE
GEN-2015-058	50.00	SPS	Atoka 115kV	FACILITY STUDY STAGE
GEN-2015-062	4.50	OKGE	Tap and Tie South 4th - Bunch Creek & Enid Tap - Fairmont (GEN-2012-033T) 138kV	FACILITY STUDY STAGE
GEN-2015-063	300.00	OKGE	Tap Woodring - Mathewson 345kV	FACILITY STUDY STAGE
GEN-2015-064	197.80	SUNCMKEC	Mingo 115kV	FACILITY STUDY STAGE
GEN-2015-065	202.40	SUNCMKEC	Mingo 345kV	FACILITY STUDY STAGE
GEN-2015-066	248.40	OKGE	Tap Cleveland - Sooner 345kV	FACILITY STUDY STAGE
GEN-2015-068	300.00	SPS	TUCO Interchange 345kV	FACILITY STUDY STAGE
GEN-2015-069	300.00	WERE	Union Ridge 230kV	FACILITY STUDY STAGE
GEN-2015-071	200.00	AEPW	Chisholm 345kV	FACILITY STUDY STAGE
GEN-2015-073	200.10	WERE	Emporia Energy Center 345kV	FACILITY STUDY STAGE
GEN-2015-075	51.50	SPS	Carlisle 69kV	FACILITY STUDY STAGE
GEN-2015-076	158.40	NPPD	Belden 115kV	FACILITY STUDY STAGE

Request	Amount	Area	Requested/Proposed Point of Interconnection	Status or In-Service Date
GEN-2015-079	129.20	SPS	Tap Yoakum - Hobbs Interchange 230kV	FACILITY STUDY STAGE
GEN-2015-080	129.20	SPS	Tap Yoakum - Hobbs Interchange 230kV	FACILITY STUDY STAGE
GEN-2015-082	200.00	OKGE	Tap Hitchland - Woodward Dbl Ckt (GEN-2011-014 Tap) 345kV	DISIS STAGE
GEN-2015-083	125.00	WERE	Belle Plain 138kV	FACILITY STUDY STAGE
GEN-2015-084	51.30	AEPW	Hollis 138kV	FACILITY STUDY STAGE
GEN-2015-085	122.40	AEPW	Altus Junction 138kV	FACILITY STUDY STAGE
GEN-2015-087	66.00	NPPD	Tap Fairbury - Hebron 115kV	FACILITY STUDY STAGE
GEN-2015-088	300.00	NPPD	Tap Moore - Pauline 345kV	FACILITY STUDY STAGE
GEN-2015-090	220.00	WERE	Tap Thistle - Wichita 345kV Dbl CKT	FACILITY STUDY STAGE
GEN-2015-092	250.00	AEPW	Tap Lawton - Sunnyside (Terry Road) 345kV	FACILITY STUDY STAGE
GEN-2015-093	250.00	OKGE	Gracemont 345kV	FACILITY STUDY STAGE
GEN-2015-095	176.00	WFEC	DeGrasse 138kV	DISIS STAGE
GEN-2015-096	150.00	WAPA	Tap Belfied - Rhame 230kV	On-Line
GEN-2015-098	100.00	WAPA	Mingusville 230kV	FACILITY STUDY STAGE
GEN-2016-003	248.40	OKGE	Tap Badger - Woodward 345kV	DISIS STAGE
GEN-2016-004	202.00	WAPA	Leland Olds 230kV	DISIS STAGE
GEN-2016-005	150.00	SUNCMKEC	Tap Clark County - Thistle 345kV	DISIS STAGE
GEN-2016-007	100.00	WAPA	Valley City 115kV	DISIS STAGE
GEN-2016-009	29.00	OKGE	Osage 69kV	DISIS STAGE
GEN-2016-013	10.00	EMDE	La Russell 161kV	DISIS STAGE
GEN-2016-014	10.00	EMDE	La Russell 161kV	DISIS STAGE
GEN-2016-015	100.00	SPS	Andrews 230kV	DISIS STAGE
GEN-2016-016	78.20	MIDW	North Kinsley 115kV	DISIS STAGE
GEN-2016-017	250.70	WAPA	Tap Fort Thompson - Leland Olds 345kV	DISIS STAGE
GEN-2016-020	150.00	WFEC	Mooreland 138kV	DISIS STAGE
GEN-2016-021	300.00	NPPD	Hoskins 345kV	DISIS STAGE
GEN-2016-022	151.80	OKGE	Ranch Road 345kV	DISIS STAGE
GEN-2016-023	150.50	WAPA	Tap Laramie River – Sidney 345kV	DISIS STAGE
GEN-2016-028	100.00	AEPW	Clayton 138kV	DISIS STAGE
GEN-2016-029	150.00	WAPA	Tap Laramie River – Sidney 345kV	DISIS STAGE
GEN-2016-030	100.00	OKGE	Brown 138kV	DISIS STAGE
GEN-2016-031	1.50	OKGE	Ranch Road 345kV	DISIS STAGE
GEN-2016-032	200.00	OKGE	Tap Marshall - Cottonwood Creek 138kV	DISIS STAGE
GEN-2016-037	300.00	AEPW	Tap Chisholm - Gracemont 345kV	DISIS STAGE
GEN-2016-043	230.00	NPPD	Hoskins 345kV	DISIS STAGE
GEN-2016-045	499.10	OKGE	Mathewson 345kV	DISIS STAGE
GEN-2016-046	299.00	SUNCMKEC	Tap Clark County - Ironwood 345kV	DISIS STAGE
GEN-2016-047	24.00	OKGE	Mustang 69kV	DISIS STAGE
GEN-2016-048	82.30	OKGE	Sooner 138kV	DISIS STAGE
GEN-2016-049	310.20	SUNCMKEC	Tap Spearville - Post Rock 345kV	DISIS STAGE
GEN-2016-050	250.70	NPPD	Tap Axtell - Post Rock 345kV	DISIS STAGE
GEN-2016-051	9.80	AEPW	Tap Clinton Junction - Weatherford Southeast 138kV	DISIS STAGE
GEN-2016-052	3.30	WAPA	Hilken 230kV	DISIS STAGE
GEN-2016-053	3.30	WAPA	Hilken 230kV	DISIS STAGE
GEN-2016-054	3.40	WAPA	Wessington Springs 230kV	DISIS STAGE
GEN-2016-056	200.00	SPS	Carlisle 230kV	DISIS STAGE
GEN-2016-057	499.10	OKGE	Mathewson 345kV	DISIS STAGE
GEN-2016-060	25.30	WERE	Belle Plain 138kV	DISIS STAGE
GEN-2016-061	250.70	OKGE	Tap Woodring - Sooner 345kV	DISIS STAGE

Request	Amount	Area	Requested/Proposed Point of Interconnection	Status or In-Service Date
GEN-2016-062	250.70	SPS	Andrews 230kV	DISIS STAGE
GEN-2016-063	200.00	OKGE	Tap Sunnyside – Hugo 345kV	DISIS STAGE
GEN-2016-067	73.60	SUNCMKEC	Mingo 345kV	DISIS STAGE
GEN-2016-068	250.00	OKGE	Woodring 345kV	DISIS STAGE
GEN-2016-069	31.40	SPS	Chaves County 115kV	DISIS STAGE
GEN-2016-070	5.30	SPS	Martin 115kV	DISIS STAGE
GEN-2016-071	200.10	WFEC	Chilocco 138kV	DISIS STAGE
GEN-2016-073	220.00	WERE	Tap Thistle – Wichita 345kV Dbl CKT	DISIS STAGE
Gray County Wind (Montezuma)	110.00	SUNCMKEC	Gray County Tap 115kV	On-Line
H081	200.00	XEL	Tap Brookings - Lyons County 345kV	Under Study DPP-2016-FEB-West
J003	20.00	MDU	Baker 115kV	MISO Queued Request
J249	180.00	MDU	MDU Tatanka 230kV	MISO Queued Request
J262	100.00	OTP	Jamestown 345	MISO Queued Request
J263	100.00	OTP	Jamestown 345	MISO Queued Request
J290	150.00	XEL	Tap Glenboro South - Rugby 230kV	MISO Queued Request
J316	150.00	MDU	MDU 230 kV Tatanka-Ellendale line	MISO Queued Request
J432	98.00	XEL	Brookings 345kV	Under Study DPP-2016-FEB-West
J436	150.00	OTP	Big Stone South 345kV	MISO Queued Request
J437	150.00	OTP	Big Stone South 345kV	MISO Queued Request
J442	200.00	OTP	Big Stone 230 kV	MISO Queued Request
J460	200.00	XEL	Tap Brookings - Lyons County 345kV	Under Study DPP-2016-FEB-West
J488	151.80	OTP	Tap Big Stone - Ellendale 345kV	Under Study DPP-2016-FEB-West
J489	151.80	OTP	Tap Big Stone - Ellendale 345kV	Under Study DPP-2016-FEB-West
J490	60.00	MDU	McIntosh 115kV	Under Study DPP-2016-FEB-West
J493	150.00	OTP	Burr 115kV	Under Study DPP-2016-FEB-West
J510	326.90	OTP	Tap Brookings - Big Stone 345kV	Under Study DPP-2016-FEB-West
J525	50.00	XEL	Lake Wilson 69kV	Under Study DPP-2016-FEB-West
J526	300.00	OTP	Tap Brookings - Big Stone 345kV	Under Study DPP-2016-FEB-West
Llano Estacado (White Deer)	80.00	SPS	Llano Wind 115kV	On-Line
MPC01200	44.00	OTP	Sidney 230kV	IA Pending
MPC02100	100.00	OTP	Sidney 230kV	On-Line
NPPD Distributed (Broken Bow)	8.30	NPPD	Broken Bow 115kV	On-Line
NPPD Distributed (Buffalo County Solar)	10.00	NPPD	Kearney Northeast	On-Line
NPPD Distributed (Burt County Wind)	12.00	NPPD	Tekamah & Oakland 115kV	On-Line
NPPD Distributed (Burwell)	3.00	NPPD	Ord 115kV	On-Line
NPPD Distributed (Columbus Hydro)	45.00	NPPD	Columbus 115kV	On-Line
NPPD Distributed (North Platte - Lexington)	54.00	NPPD	Multiple: Jeffrey 115kV, John_1 115kV, John_2 115kV	On-Line
NPPD Distributed (Ord)	11.90	NPPD	Ord 115kV	On-Line
NPPD Distributed (Stuart)	2.10	NPPD	Ainsworth 115kV	On-Line
SPS Distributed (Carson)	10.00	SPS	Martin 115kV	On-Line
SPS Distributed (Dumas 19th St)	20.00	SPS	Dumas 19th Street 115kV	On-Line

Request	Amount	Area	Requested/Proposed Point of Interconnection	Status or In-Service Date
SPS Distributed (Etter)	20.00	SPS	Etter 115kV	On-Line
SPS Distributed (Hopi)	10.00	SPS	Hopi 115kV	On-Line
SPS Distributed (Jal)	10.00	SPS	S Jal 115kV	On-Line
SPS Distributed (Lea Road)	10.00	SPS	Lea Road 115kV	On-Line
SPS Distributed (Monument)	10.00	SPS	Monument 115kV	On-Line
SPS Distributed (Moore E)	25.00	SPS	Moore East 115kV	On-Line
SPS Distributed (Ocotillo)	10.00	SPS	S_Jal 115kV	On-Line
SPS Distributed (Sherman)	20.00	SPS	Sherman 115kV	On-Line
SPS Distributed (Spearman)	10.00	SPS	Spearman 69kV	On-Line
SPS Distributed (TC-Texas County)	20.00	SPS	Texas County 115kV	On-Line
SPS Distributed (Yuma)	2.57	SPS	SP-Yuma 69kV	On-Line
Total:	**48,647.0**			

11.3 C: STUDY GROUPINGS

C. Study Groups

GROUP 1: WOODWARD AREA			
Request	Capacity	Area	Proposed Point of Interconnection
GEN-2001-014	96.00	WFEC	Ft Supply 138kV
GEN-2001-037	100.00	OKGE	FPL Moreland Tap 138kV
GEN-2005-008	120.00	OKGE	Woodward 138kV
GEN-2006-024S	19.80	WFEC	Buffalo Bear Tap 69kV
GEN-2006-046	131.00	OKGE	Dewey 138kV
GEN-2007-021	201.00	OKGE	Tatonga 345kV
GEN-2007-043	200.00	OKGE	Minco 345kV
GEN-2007-044	300.00	OKGE	Tatonga 345kV
GEN-2007-050	170.00	OKGE	Woodward EHV 138kV
GEN-2007-062	425.00	OKGE	Woodward EHV 345kV
GEN-2008-003	101.00	OKGE	Woodward EHV 138kV
GEN-2008-044	197.80	OKGE	Tatonga 345kV
GEN-2010-011	29.70	OKGE	Tatonga 345kV
GEN-2010-040	300.00	OKGE	Cimarron 345kV
GEN-2011-010	100.80	OKGE	Minco 345kV
GEN-2011-019	175.00	OKGE	Woodward 345kV
GEN-2011-020	165.60	OKGE	Woodward 345kV
GEN-2011-054	300.00	OKGE	Cimarron 345kV
GEN-2014-002	10.50	OKGE	Tatonga 345kV (GEN-2007-021 POI)
GEN-2014-003	15.80	OKGE	Tatonga 345kV (GEN-2007-044 POI)
GEN-2014-005	5.70	OKGE	Minco 345kV (GEN-2011-010 POI)
GEN-2014-020	100.00	AEPW	Tuttle 138kV
GEN-2014-056	250.00	OKGE	Minco 345kV
GEN-2015-029	161.00	OKGE	Tatonga 345kV
GEN-2015-048	200.00	OKGE	Cleo Corner 138kV
GEN-2015-057	100.00	OKGE	Minco 345kV
GEN-2015-093	250.00	OKGE	Gracemont 345kV
GEN-2015-095	176.00	WFEC	DeGrasse 138kV
GEN-2016-003	248.40	OKGE	Tap Badger - Woodward 345kV
GEN-2016-020	150.00	WFEC	Mooreland 138kV
GEN-2016-045	499.10	OKGE	Mathewson 345kV
GEN-2016-047	24.00	OKGE	Mustang 69kV
GEN-2016-057	499.10	OKGE	Mathewson 345kV
PRIOR QUEUED SUBTOTAL	5,822.30		
AREA TOTAL	5,822.30		

GROUP 2: HITCHLAND AREA

Request	Capacity	Area	Proposed Point of Interconnection
ASGI-2011-002	20.00	SPS	Herring 115kV
ASGI-2013-001	11.50	SPS	PanTex South 115kV
GEN-2002-008	240.00	SPS	Hitchland 345kV
GEN-2002-009	80.00	SPS	Hansford 115kV
GEN-2002-022	240.00	SPS	Bushland 230kV
GEN-2003-020	160.00	SPS	Martin 115kV
GEN-2006-020S	18.90	SPS	DWS Frisco 115kV
GEN-2006-044	370.00	SPS	Hitchland 345kV
GEN-2007-046	200.00	SPS	Hitchland 115kV
GEN-2008-047	300.00	OKGE	Beaver County 345kV
GEN-2008-051	322.00	SPS	Potter County 345kV
GEN-2010-001	300.00	OKGE	Beaver County 345kV
GEN-2010-014	358.80	SPS	Hitchland 345kV
GEN-2011-014	201.00	OKGE	Tap Hitchland - Woodward Dbl Ckt (GEN-2011-014 Tap) 345kV
GEN-2011-022	299.00	SPS	Hitchland 345kV
GEN-2013-030	300.00	OKGE	Beaver County 345kV
GEN-2014-037	200.00	SPS	Tap Hitchland - Beaver County Dbl Ckt (Optima) 345kV
GEN-2015-082	200.00	OKGE	Tap Hitchland - Woodward Dbl Ckt (GEN-2011-014 Tap) 345kV
GEN-2016-070	5.30	SPS	Martin 115kV
Llano Estacado (White Deer)	80.00	SPS	Llano Wind 115kV
SPS Distributed (Carson)	10.00	SPS	Martin 115kV
SPS Distributed (Dumas 19th St)	20.00	SPS	Dumas 19th Street 115kV
SPS Distributed (Etter)	20.00	SPS	Etter 115kV
SPS Distributed (Moore E)	25.00	SPS	Moore East 115kV
SPS Distributed (Sherman)	20.00	SPS	Sherman 115kV
SPS Distributed (Spearman)	10.00	SPS	Spearman 69kV
SPS Distributed (TC-Texas County)	20.00	SPS	Texas County 115kV
PRIOR QUEUED SUBTOTAL	**4,031.50**		
AREA TOTAL	**4,031.50**		

GROUP 3: SPEARVILLE AREA

Request	Capacity	Area	Proposed Point of Interconnection
ASGI-2012-006	22.50	SUNCMKEC	Tap Hugoton - Rolla 69kV
ASGI-2015-001	6.13	SUNCMKEC	Ninnescah 115kV
GEN-2001-039A	105.00	SUNCMKEC	Shooting Star Tap 115kV
GEN-2002-025A	150.00	SUNCMKEC	Spearville 230kV
GEN-2004-014	154.50	SUNCMKEC	Spearville 230kV
GEN-2005-012	250.00	SUNCMKEC	Ironwood 345kV
GEN-2006-021	101.00	SUNCMKEC	Flat Ridge Tap 138kV
GEN-2007-040	200.00	SUNCMKEC	Buckner 345kV
GEN-2008-018	250.00	SPS	Finney 345kV
GEN-2008-079	99.20	SUNCMKEC	Crooked Creek 115kV
GEN-2008-124	200.10	SUNCMKEC	Ironwood 345kV
GEN-2010-009	165.60	SUNCMKEC	Buckner 345kV
GEN-2010-045	197.80	SUNCMKEC	Buckner 345kV
GEN-2011-008	600.00	SUNCMKEC	Clark County 345kV
GEN-2011-016	200.10	SUNCMKEC	Ironwood 345kV
GEN-2012-007	120.00	SUNCMKEC	Rubart 115kV
GEN-2012-024	180.00	SUNCMKEC	Clark County 345kV
GEN-2013-010	99.00	SUNCMKEC	Tap Spearville - Post Rock (North of GEN-2011-017 Tap) 345kV
GEN-2015-021	20.00	SUNCMKEC	Johnson Corner 115kV
GEN-2016-005	150.00	SUNCMKEC	Tap Clark County - Thistle 345kV
GEN-2016-016	78.20	MIDW	North Kinsley 115kV
GEN-2016-046	299.00	SUNCMKEC	Tap Clark County - Ironwood 345kV
GEN-2016-049	310.20	SUNCMKEC	Tap Spearville - Post Rock 345kV
Gray County Wind (Montezuma)	110.00	SUNCMKEC	Gray County Tap 115kV
PRIOR QUEUED SUBTOTAL	**4,068.33**		
AREA TOTAL	**4,068.33**		

GROUP 4: NORTHWEST KANSAS AREA

Request	Capacity	Area	Proposed Point of Interconnection
ASGI-2013-004	36.60	SUNCMKEC	Morris 115kV
GEN-2001-039M	100.00	SUNCMKEC	Central Plains Tap 115kV
GEN-2003-006A	200.00	SUNCMKEC	Elm Creek 230kV
GEN-2003-019	250.00	MIDW	Smoky Hills Tap 230kV
GEN-2006-031	75.00	MIDW	Knoll 115kV
GEN-2008-092	200.60	MIDW	Post Rock 230kV
GEN-2009-008	199.50	MIDW	South Hays 230kV
GEN-2009-020	48.30	MIDW	Walnut Creek 69kV
GEN-2010-057	201.00	MIDW	Rice County 230kV
GEN-2013-033	28.00	MIDW	Knoll 115kV
GEN-2014-025	2.40	MIDW	Walnut Creek 69kV
GEN-2014-041	120.80	SUNCMKEC	Arnold 115kV
GEN-2015-064	197.80	SUNCMKEC	Mingo 115kV
GEN-2015-065	202.40	SUNCMKEC	Mingo 345kV
GEN-2016-067	73.60	SUNCMKEC	Mingo 345kV
GEN-2017-035	85.00	MIDW	Tap Ellsworth - Bushton 115kV
PRIOR QUEUED SUBTOTAL	**2,021.00**		
AREA TOTAL	**2,021.00**		

GROUP 6: SOUTH TEXAS PANHANDLE/NEW MEXICO AREA

Request	Capacity	Area	Proposed Point of Interconnection
ASGI-2010-010	42.20	SPS	Lovington 115kV
ASGI-2010-020	30.00	SPS	Tap LE-Tatum - LE-Crossroads 69kV
ASGI-2010-021	15.00	SPS	Tap LE-Saunders Tap - LE-Anderson 69kV
ASGI-2011-001	27.30	SPS	Lovington 115kV
ASGI-2011-003	10.00	SPS	Hendricks 69kV
ASGI-2011-004	20.00	SPS	Pleasant Hill 69kV
ASGI-2012-002	18.15	SPS	FE-Clovis Interchange 115kV
ASGI-2013-002	18.40	SPS	FE Tucumcari 115kV
ASGI-2013-003	18.40	SPS	FE Clovis 115kV
ASGI-2013-005	1.65	SPS	FE Clovis 115kV
ASGI-2013-006	2.00	SPS	SP-Erskine 115kV
ASGI-2014-001	2.50	SPS	SP-Erskine 115kV
ASGI-2015-002	2.00	SPS	SP-Yuma 69kV
ASGI-2016-001	2.50	SPS	Wolfforth 115kV
ASGI-2016-002	0.35	SPS	SP-Yuma 115kV
ASGI-2016-004	9.60	SPS	Palo Duro 115kV
GEN-2001-033	180.00	SPS	San Juan Tap 230kV
GEN-2001-036	80.00	SPS	Norton 115kV
GEN-2006-018	170.00	SPS	TUCO Interchange 230kV
GEN-2006-026	502.00	SPS	Hobbs 230kV & Hobbs 115kV
GEN-2008-022	300.00	SPS	Crossroads 345kV
GEN-2010-006	205.00	SPS	Jones 230kV
GEN-2010-046	56.00	SPS	TUCO Interchange 230kV
GEN-2011-025	80.00	SPS	Tap Floyd County - Crosby County 115kV
GEN-2011-045	205.00	SPS	Jones 230kV
GEN-2011-046	27.00	SPS	Lopez 115kV
GEN-2011-048	175.00	SPS	Mustang 230kV
GEN-2012-001	61.20	SPS	Cirrus Tap 230kV
GEN-2012-020	478.00	SPS	TUCO 230kV
GEN-2012-034	7.00	SPS	Mustang 230kV
GEN-2012-035	7.00	SPS	Mustang 230kV
GEN-2012-036	7.00	SPS	Mustang 230kV
GEN-2012-037	203.00	SPS	TUCO 345kV
GEN-2013-016	203.00	SPS	TUCO 345kV
GEN-2013-022	25.00	SPS	Norton 115kV
GEN-2013-027	150.00	SPS	Tap Tolk - Yoakum 230kV
GEN-2014-012	225.00	SPS	Tap Hobbs Interchange - Andrews 230kV
GEN-2014-033	70.00	SPS	Chaves County 115kV
GEN-2014-034	70.00	SPS	Chaves County 115kV
GEN-2014-035	30.00	SPS	Chaves County 115kV
GEN-2014-040	320.40	SPS	Castro 115kV
GEN-2014-047	40.00	SPS	Crossroads 345kV
GEN-2015-014	150.00	SPS	Tap Cochran - Lehman 115kV
GEN-2015-020	100.00	SPS	Oasis 115kV
GEN-2015-022	112.00	SPS	Swisher 115kV
GEN-2015-031	150.50	SPS	Tap Amarillo South - Swisher 230kV
GEN-2015-041	5.00	SPS	TUCO Interchange 345kV
GEN-2015-056	101.20	SPS	Crossroads 345kV
GEN-2015-058	50.00	SPS	Atoka 115kV

GEN-2015-068	300.00	SPS	TUCO Interchange 345kV
GEN-2015-075	51.50	SPS	Carlisle 69kV
GEN-2015-079	129.20	SPS	Tap Yoakum - Hobbs Interchange 230kV
GEN-2015-080	129.20	SPS	Tap Yoakum - Hobbs Interchange 230kV
GEN-2016-015	100.00	SPS	Andrews 230kV
GEN-2016-056	200.00	SPS	Carlisle 230kV
GEN-2016-062	250.70	SPS	Andrews 230kV
GEN-2016-069	31.40	SPS	Chaves County 115kV
SPS Distributed (Hopi)	10.00	SPS	Hopi 115kV
SPS Distributed (Jal)	10.00	SPS	S Jal 115kV
SPS Distributed (Lea Road)	10.00	SPS	Lea Road 115kV
SPS Distributed (Monument)	10.00	SPS	Monument 115kV
SPS Distributed (Ocotillo)	10.00	SPS	S_Jal 115kV
SPS Distributed (Yuma)	2.57	SPS	SP-Yuma 69kV
PRIOR QUEUED SUBTOTAL	**6,009.92**		
AREA TOTAL	**6,009.92**		

GROUP 7: SOUTHWEST OKLAHOMA AREA

Request	Capacity	Area	Proposed Point of Interconnection
GEN-2001-026	74.30	WFEC	Washita 138kV
GEN-2002-005	120.00	WFEC	Red Hills Tap 138kV
GEN-2003-004	100.00	WFEC	Washita 138kV
GEN-2003-005	100.00	WFEC	Anadarko - Paradise (Blue Canyon) 138kV
GEN-2003-022	120.00	AEPW	Weatherford 138kV
GEN-2004-020	27.00	AEPW	Weatherford 138kV
GEN-2004-023	20.60	WFEC	Washita 138kV
GEN-2005-003	30.60	WFEC	Washita 138kV
GEN-2006-002	101.00	AEPW	Sweetwater 230kV
GEN-2006-035	225.00	AEPW	Sweetwater 230kV
GEN-2006-043	99.00	AEPW	Sweetwater 230kV
GEN-2007-052	150.00	WFEC	Anadarko 138kV
GEN-2008-023	150.00	AEPW	Hobart Junction 138kV
GEN-2008-037	101.00	WFEC	Slick Hills 138kV
GEN-2011-037	7.00	WFEC	Blue Canyon 5 138kV
GEN-2011-049	250.70	OKGE	Border 345kV
GEN-2012-028	74.80	WFEC	Gotebo 69kV
GEN-2015-004	52.90	OKGE	Border 345kV
GEN-2015-013	120.00	WFEC	Synder 138kV
GEN-2015-055	40.00	WFEC	Erick 138kV
GEN-2015-071	200.00	AEPW	Chisholm 345kV
GEN-2015-084	51.30	AEPW	Hollis 138kV
GEN-2015-085	122.40	AEPW	Altus Junction 138kV
GEN-2016-037	300.00	AEPW	Tap Chisholm - Gracemont 345kV
GEN-2016-051	9.80	AEPW	Tap Clinton Junction - Weatherford Southeast 138kV
PRIOR QUEUED SUBTOTAL	**2,647.40**		
AREA TOTAL	**2,647.40**		

GROUP 8: NORTH OKLAHOMA/SOUTH CENTRAL KANSAS AREA

Request	Capacity	Area	Proposed Point of Interconnection
ASGI-2010-006	150.00	AECI	Remington 138kV
ASGI-2014-014	56.40	GRDA	Ferguson 69kV
ASGI-2015-004	56.36	GRDA	Coffeyville City 69kV
GEN-2002-004	200.00	WERE	Latham 345kV
GEN-2005-013	201.00	WERE	Caney River 345kV
GEN-2007-025	300.00	WERE	Viola 345kV
GEN-2008-013	300.00	OKGE	Hunter 345kV
GEN-2008-021	42.00	WERE	Wolf Creek 345kV
GEN-2008-098	100.80	WERE	Waverly 345kV
GEN-2009-025	59.80	OKGE	Nardins 69kV
GEN-2010-003	100.80	WERE	Waverly 345kV
GEN-2010-005	299.20	WERE	Viola 345kV
GEN-2010-055	4.50	AEPW	Wekiwa 138kV
GEN-2011-057	150.40	WERE	Creswell 138kV
GEN-2012-032	300.00	OKGE	Open Sky 345kV
GEN-2012-033	98.10	OKGE	Tap and Tie South 4th - Bunch Creek & Enid Tap - Fairmont (GEN-2012-033T) 138kV
GEN-2012-041	121.50	OKGE	Ranch Road 345kV
GEN-2013-012	147.00	OKGE	Redbud 345kV
GEN-2013-028	559.50	GRDA	Tap N Tulsa - GRDA 1 345kV
GEN-2013-029	300.00	OKGE	Renfrow 345kV

GEN-2014-001	200.60	WERE	Tap Wichita - Emporia Energy Center (GEN-2014-001 Tap) 345kV
GEN-2014-028	35.00	EMDE	Riverton 161kV
GEN-2014-064	248.40	OKGE	Otter 138kV
GEN-2015-001	200.00	OKGE	Ranch Road 345kV
GEN-2015-015	154.60	OKGE	Tap Medford Tap - Coyote 138kV
GEN-2015-016	200.00	KCPL	Tap Marmaton - Centerville 161kV
GEN-2015-024	220.00	WERE	Tap Thistle - Wichita 345kV Dbl CKT
GEN-2015-025	220.00	WERE	Tap Thistle - Wichita 345kV Dbl CKT
GEN-2015-030	200.10	OKGE	Sooner 345kV
GEN-2015-034	200.00	OKGE	Ranch Road 345kV
GEN-2015-047	300.00	OKGE	Sooner 345kV
GEN-2015-052	300.00	WERE	Tap Open Sky - Rose Hill 345kV
GEN-2015-062	4.50	OKGE	Tap and Tie South 4th - Bunch Creek & Enid Tap - Fairmont (GEN-2012-033T) 138kV
GEN-2015-063	300.00	OKGE	Tap Woodring - Mathewson 345kV
GEN-2015-066	248.40	OKGE	Tap Cleveland - Sooner 345kV
GEN-2015-069	300.00	WERE	Union Ridge 230kV
GEN-2015-073	200.10	WERE	Emporia Energy Center 345kV
GEN-2015-083	125.00	WERE	Belle Plain 138kV
GEN-2015-090	220.00	WERE	Tap Thistle - Wichita 345kV Dbl CKT
GEN-2016-009	29.00	OKGE	Osage 69kV
GEN-2016-022	151.80	OKGE	Ranch Road 345kV
GEN-2016-031	1.50	OKGE	Ranch Road 345kV
GEN-2016-032	200.00	OKGE	Tap Marshall - Cottonwood Creek 138kV
GEN-2016-048	82.30	OKGE	Sooner 138kV
GEN-2016-060	25.30	WERE	Belle Plain 138kV
GEN-2016-061	250.70	OKGE	Tap Woodring - Sooner 345kV
GEN-2016-068	250.00	OKGE	Woodring 345kV
GEN-2016-071	200.10	WFEC	Chilocco 138kV
GEN-2016-073	220.00	WERE	Tap Thistle – Wichita 345kV Dbl CKT
PRIOR QUEUED SUBTOTAL	**8,834.76**		
AREA TOTAL	**8,834.76**		

GROUP 9: NEBRASKA AREA

Request	Capacity	Area	Proposed Point of Interconnection
GEN-2002-023N	0.80	NPPD	Harmony 115kV
GEN-2003-021N	75.00	NPPD	Ainsworth Wind Tap 115kV
GEN-2004-023N	75.00	NPPD	Columbus Co 115kV
GEN-2006-020N	42.00	NPPD	Bloomfield 115kV
GEN-2006-037N1	75.00	NPPD	Broken Bow 115kV
GEN-2006-038N005	80.00	NPPD	Broken Bow 115kV
GEN-2006-038N019	80.00	NPPD	Petersburg North 115kV
GEN-2006-044N	40.50	NPPD	North Petersburg 115kV
GEN-2007-011N08	81.00	NPPD	Bloomfield 115kV
GEN-2007-017IS	166.00	WAPA	Ft Thompson-Grand Island 345kV
GEN-2007-018IS	234.00	WAPA	Ft Thompson-Grand Island 345kV
GEN-2008-086N02	201.00	NPPD	Meadow Grove 230kV
GEN-2008-119O	60.00	OPPD	S1399 161kV
GEN-2008-123N	89.70	NPPD	Tap Pauline - Guide Rock (Rosemont) 115kV
GEN-2009-040	73.80	WERE	Marshall 115kV
GEN-2010-041	10.50	OPPD	S1399 161kV
GEN-2010-051	200.00	NPPD	Tap Hoskins - Twin Church (Dixon County) 230kV
GEN-2011-018	73.60	NPPD	Steele City 115kV
GEN-2011-027	120.00	NPPD	Tap Hoskins - Twin Church (Dixon County) 230kV

GEN-2011-056	3.60	NPPD	Jeffrey 115kV
GEN-2011-056A	3.60	NPPD	John 1 115kV
GEN-2011-056B	4.50	NPPD	John 2 115kV
GEN-2012-021	4.80	LES	Terry Bundy Generating Station 115kV
GEN-2013-002	50.60	LES	Tap Sheldon - Folsom & Pleasant Hill (GEN-2013-002 Tap) 115kV CKT 2
GEN-2013-008	1.20	NPPD	Steele City 115kV
GEN-2013-019	73.60	LES	Tap Sheldon - Folsom & Pleasant Hill (GEN-2013-002 Tap) 115kV CKT 2
GEN-2013-032	204.00	NPPD	Antelope 115kV
GEN-2014-004	4.00	NPPD	Steele City 115kV (GEN-2011-018 POI)
GEN-2014-013	73.50	NPPD	Meadow Grove (GEN-2008-086N2 Sub) 230kV
GEN-2014-031	35.80	NPPD	Meadow Grove 230kV
GEN-2014-032	10.20	NPPD	Meadow Grove 230kV
GEN-2014-039	73.40	NPPD	Friend 115kV
GEN-2015-007	160.00	NPPD	Hoskins 345kV
GEN-2015-023	300.70	NPPD	Holt County 345kV
GEN-2015-053	50.00	NPPD	Antelope 115kV
GEN-2015-076	158.40	NPPD	Belden 115kV
GEN-2015-087	66.00	NPPD	Tap Fairbury - Hebron 115kV
GEN-2015-088	300.00	NPPD	Tap Moore - Pauline 345kV
GEN-2015-089	200.00	WAPA	Utica 230kV
GEN-2016-021	300.00	NPPD	Hoskins 345kV
GEN-2016-023	150.50	WAPA	Tap Laramie River – Sidney 345kV
GEN-2016-029	150.00	WAPA	Tap Laramie River – Sidney 345kV
GEN-2016-043	230.00	NPPD	Hoskins 345kV
GEN-2016-050	250.70	NPPD	Tap Axtell - Post Rock 345kV
GEN-2016-075	50.00	WAPA	Grand Prairie 345kV
NPPD Distributed (Broken Bow)	8.30	NPPD	Broken Bow 115kV
NPPD Distributed (Buffalo County Solar)	10.00	NPPD	Kearney Northeast
NPPD Distributed (Burt County Wind)	12.00	NPPD	Tekamah & Oakland 115kV
NPPD Distributed (Burwell)	3.00	NPPD	Ord 115kV
NPPD Distributed (Columbus Hydro)	45.00	NPPD	Columbus 115kV
NPPD Distributed (North Platte - Lexington)	54.00	NPPD	Multiple: Jeffrey 115kV, John_1 115kV, John_2 115kV
NPPD Distributed (Ord)	11.90	NPPD	Ord 115kV
NPPD Distributed (Stuart)	2.10	NPPD	Ainsworth 115kV
PRIOR QUEUED SUBTOTAL	**4,833.30**		
AREA TOTAL	**4,833.30**		

GROUP 10: SOUTHEAST OKLAHOMA/NORTHEAST TEXAS AREA

Request	Capacity	Area	Proposed Point of Interconnection
AREA TOTAL	0.00		

GROUP 12: NORTHWEST ARKANSAS AREA

Request	Capacity	Area	Proposed Point of Interconnection
GEN-2013-011	30.00	AEPW	Turk 138kV
GEN-2016-013	10.00	EMDE	La Russell 161kV
GEN-2016-014	10.00	EMDE	La Russell 161kV
PRIOR QUEUED SUBTOTAL	50.00		
AREA TOTAL	50.00		

GROUP 13: NORTHWEST MISSOURI AREA

Request	Capacity	Area	Proposed Point of Interconnection
ASGI-2016-003	6.00	KCPL	Paola 161kV
GEN-2008-129	80.00	KCPL	Pleasant Hill 161kV
GEN-2010-036	4.60	WERE	6th Street 115kV
GEN-2011-011	50.00	KCPL	Iatan 345kV
GEN-2014-021	300.00	KCPL	Tap Nebraska City - Mullin Creek 345kV
GEN-2015-005	200.10	KCPL	Tap Nebraska City - Sibley 345kV
PRIOR QUEUED SUBTOTAL	640.70		
GEN-2017-108	400.00	KCPL	Montrose 161kV
CURRENT CLUSTER SUBTOTAL	400.00		
AREA TOTAL	1,040.70		

GROUP 14: SOUTH CENTRAL OKLAHOMA AREA

Request	Capacity	Area	Proposed Point of Interconnection
ASGI-2015-006	9.00	SWPA	Tupelo 138kV
GEN-2011-040	111.00	OKGE	Carter County 138kV
GEN-2011-050	109.80	AEPW	Santa Fe Tap 138kV
GEN-2012-004	41.40	OKGE	Carter County 138kV
GEN-2013-007	100.30	OKGE	Tap Prices Falls - Carter 138kV
GEN-2014-057	250.00	AEPW	Tap Lawton - Sunnyside (Terry Road) 345kV
GEN-2015-036	303.60	OKGE	Johnston County 345kV
GEN-2015-045	20.00	AEPW	Tap Lawton - Sunnyside (Terry Road) 345kV
GEN-2015-092	250.00	AEPW	Tap Lawton - Sunnyside (Terry Road) 345kV
GEN-2016-028	100.00	AEPW	Clayton 138kV
GEN-2016-030	100.00	OKGE	Brown 138kV
GEN-2016-063	200.00	OKGE	Tap Sunnyside – Hugo 345kV
PRIOR QUEUED SUBTOTAL	1,595.10		
AREA TOTAL	1,595.10		

GROUP 15: E-SOUTH DAKOTA AREA

Request	Capacity	Area	Proposed Point of Interconnection
ASGI-2016-005	20.00	WAPA	Tap White Lake - Stickeny 69kV
ASGI-2016-006	20.00	WAPA	Mitchall
ASGI-2016-007	20.00	WAPA	Kimball 69kV
G176	100.00	XEL	Yankee 115kV
G255	100.00	XEL	Yankee 115kV
G586	30.00	XEL	Yankee 115kV
G736	200.00	OTP	Big Stone South 230kV
GEN-2002-009IS	40.00	WAPA	Ft Thompson 69kV [Hyde 69kV]
GEN-2007-013IS	50.00	WAPA	Wessington Springs 230kV
GEN-2007-014IS	100.00	WAPA	Wessington Springs 230kV
GEN-2007-023IS	50.00	WAPA	Formit-Summit 115kV
GEN-2009-001IS	200.00	WAPA	Groton-Watertown 345kV
GEN-2009-018IS	100.00	WAPA	Groton 115kV
GEN-2010-001IS	99.00	WAPA	Bismarck-Glenham 230kV
GEN-2010-003IS	34.00	WAPA	Wessington Springs 230kV
GEN-2012-014IS	99.50	WAPA	Groton 115kV
GEN-2013-001IS	90.00	WAPA	Summit-Watertown 115kV
GEN-2013-009IS	19.50	WAPA	Redfield NW 115kV
GEN-2014-001IS	103.70	WAPA	Newell-Maurine 115kV
GEN-2016-017	250.70	WAPA	Tap Fort Thompson - Leland Olds 345kV
H081	200.00	XEL	Tap Brookings - Lyons County 345kV
J432	98.00	XEL	Brookings 345kV
J436	150.00	OTP	Big Stone South 345kV
J437	150.00	OTP	Big Stone South 345kV
J442	200.00	OTP	Big Stone 230 kV
J460	200.00	XEL	Tap Brookings - Lyons County 345kV
J488	151.80	OTP	Tap Big Stone - Ellendale 345kV
J489	151.80	OTP	Tap Big Stone - Ellendale 345kV
J493	150.00	OTP	Burr 115kV
J510	326.90	OTP	Tap Brookings - Big Stone 345kV
J525	50.00	XEL	Lake Wilson 69kV
J526	300.00	OTP	Tap Brookings - Big Stone 345kV
PRIOR QUEUED SUBTOTAL	**3,854.90**		
AREA TOTAL	**3,854.90**		

GROUP 16: W-NORTH DAKOTA AREA

Request	Capacity	Area	Proposed Point of Interconnection

G380	150.00	OTP	Rugby 115kV
G408	12.00	XEL	Tap McHenry - Souris 115kV
G502	50.60	MP	Milton Young 230kV
G645	50.00	GRE	Ladish 115kV
G723	10.00	MDU	Haskett 115kV
G752	150.00	MDU	Tap Bison - Hettinger 230kV
G788	49.00	GRE	Ladish 115kV
G830	99.00	GRE	GRE McHenry 115kV
GEN-2005-008IS	50.00	WAPA	Hilken 230kV [Ecklund 230kV]
GEN-2006-015IS	50.00	WAPA	Hilken 230kV [Ecklund 230kV]
GEN-2007-015IS	100.00	WAPA	Hilken 230kV [Ecklund 230kV]
GEN-2009-026IS	110.00	WAPA	Dickenson-Heskett 230kV
GEN-2010-007IS	172.50	WAPA	Antelope Valley 345kV
GEN-2012-006IS	125.01	WAPA	Williston-Ch. Creek 230kV
GEN-2012-012IS	75.00	WAPA	Wolf Point-Circle 115kV
GEN-2014-003IS	91.00	WAPA	Culbertson 115kV
GEN-2014-004IS	384.20	WAPA	Charlie Creek 345kV
GEN-2014-006IS	125.00	WAPA	Williston 115kV
GEN-2014-010IS	150.00	WAPA	Neset 115kV
GEN-2014-014IS	151.50	WAPA	Belfield-Rhame 230kV
GEN-2015-046	300.00	WAPA	Tande 345kV
GEN-2015-096	150.00	WAPA	Tap Belfied - Rhame 230kV
GEN-2015-098	100.00	WAPA	Mingusville 230kV
GEN-2016-004	202.00	WAPA	Leland Olds 230kV
GEN-2016-052	3.30	WAPA	Hilken 230kV
GEN-2016-053	3.30	WAPA	Hilken 230kV
J003	20.00	MDU	Baker 115kV
J249	180.00	MDU	MDU Tatanka 230kV
J262	100.00	OTP	Jamestown 345
J263	100.00	OTP	Jamestown 345
J290	150.00	XEL	Tap Glenboro South - Rugby 230kV
J316	150.00	MDU	MDU 230 kV Tatanka-Ellendale line
MPC01200	44.00	OTP	Sidney 230kV
MPC02100	100.00	OTP	Sidney 230kV
PRIOR QUEUED SUBTOTAL	**3,757.41**		
GEN-2017-109	320.00	WAPA	Tap Dawson County - Fort Peck 230kV
CURRENT CLUSTER SUBTOTAL	**320.00**		
AREA TOTAL	**0.00**		

GROUP 17: W-SOUTH DAKOTA AREA

Request	Capacity	Area	Proposed Point of Interconnection
GEN-2006-002IS	51.00	WAPA	Wessington Springs 230kV
GEN-2009-006IS	90.00	WAPA	Mission 115kV
GEN-2009-007IS	100.00	WAPA	Mission 115kV
GEN-2009-020AIS	130.50	WAPA	Tripp Junction 115kV
GEN-2012-009IS	99.00	WAPA	Fort Randall 115kV
GEN-2016-054	3.40	WAPA	Wessington Springs 230kV
J490	60.00	MDU	McIntosh 115kV
PRIOR QUEUED SUBTOTAL	**533.90**		
AREA TOTAL	**0.00**		

GROUP 18: E-NORTH DAKOTA AREA

Request	Capacity	Area	Proposed Point of Interconnection
GEN-2002-008IS	40.50	WAPA	Edgeley 115kV [Pomona 115kV]
GEN-2005-003IS	100.00	WAPA	Nelson 115kV
GEN-2006-001IS	10.00	XEL	Marshall 115kV
GEN-2006-006IS	10.00	XEL	Marshall 115kV
GEN-2007-020IS	16.00	WAPA	Nelson 115kV
GEN-2008-008IS	5.00	WAPA	Nelson 115kV
GEN-2016-007	100.00	WAPA	Valley City 115kV
PRIOR QUEUED SUBTOTAL	**281.50**		
AREA TOTAL	**0.00**		

CLUSTER TOTAL (CURRENT STUDY)	**720.0**	**MW**
PQ TOTAL (PRIOR QUEUED)	**48,647.0**	**MW**
CLUSTER TOTAL (INCLUDING PRIOR QUEUED)	**49,367.0**	**MW**

11.4 D: PROPOSED POINT OF INTERCONNECTION ONE-LINE DIAGRAMS

Interconnection Request: GEN-2017-108
(POI: Montrose 161kV)
Cluster Interconnection Costs: $20,000,000

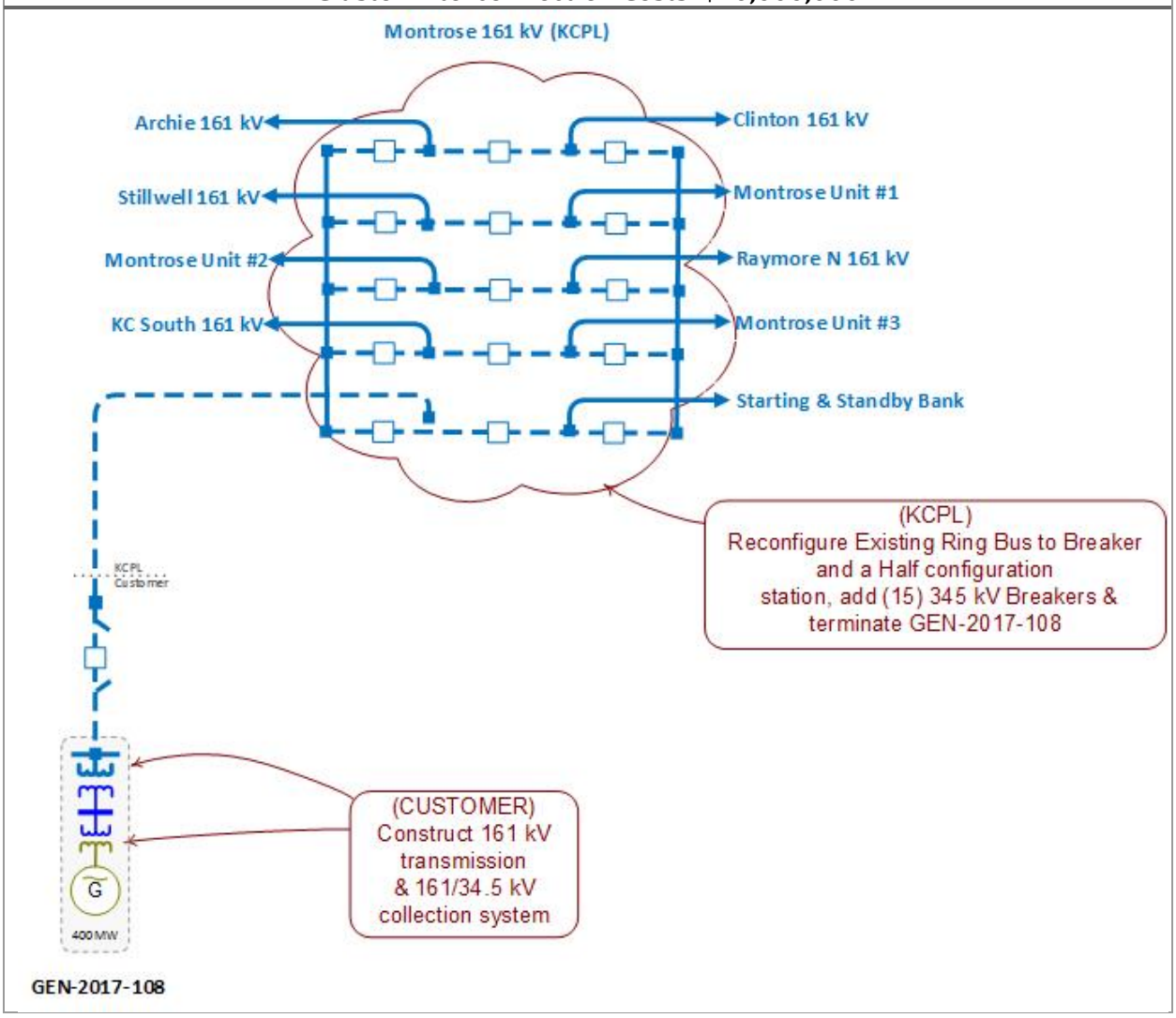

Interconnection Request: GEN-2017-109
(Primary POI: Tap Dawson Co-Ft Peck 230 kV)
Cluster Interconnection Costs: $8,000,000

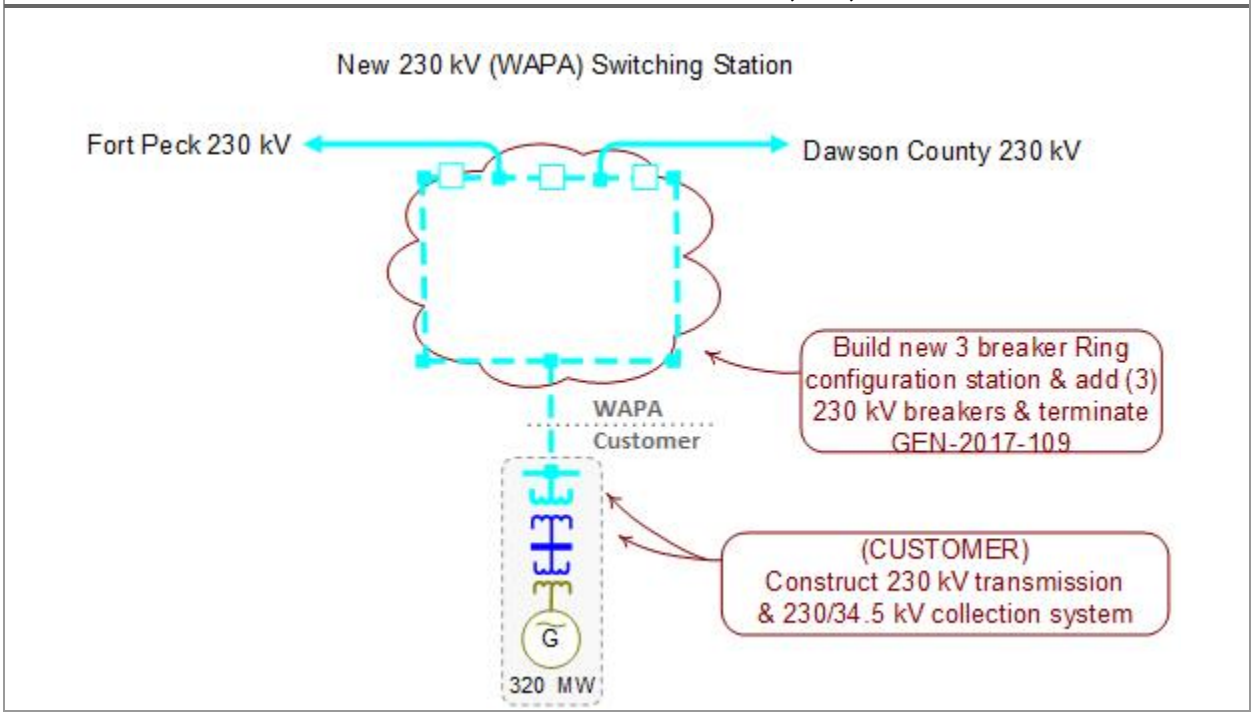

11.5 E: COST ALLOCATION PER INTERCONNECTION REQUEST (INCLUDING PRIOR QUEUED UPGRADES)

Important Note:

****WITHDRAWAL OF HIGHER QUEUED PROJECTS WILL CAUSE A RESTUDY AND MAY RESULT IN HIGHER INTERCONNECTION COSTS****

This section shows each Generator Interconnection Request Customer, their current study impacted Network Upgrades, and the previously allocated upgrades upon which they rely to accommodate their interconnection to the transmission system.

The costs associated with the current study Network Upgrades are allocated to the Customers shown in this report.

In addition should a higher queued request, defined as one this study includes as a prior queued request, withdraw, the Network Upgrades assigned to the withdrawn request may be reallocated to the remaining requests that have an impact on the Network Upgrade under a restudy. Also, should an Interconnection Request choose to go into service prior to the operation date of any necessary Network Upgrades, the costs associated with those upgrades may be reallocated to the impacted Interconnection Request. The actual costs allocated to each Generator Interconnection Request Customer will be determined at the time of a restudy.

The required interconnection costs listed do not include all costs associated with the deliverability of the energy to final customers. These costs are determined by separate studies if the Customer submits a Transmission Service Request through SPP's Open Access Same Time Information System (OASIS) as required by Attachment Z1 of the SPP OATT. In addition, costs associated with a short circuit analysis will be allocated should the Interconnection Request Customer choose to execute a Interconnection Facilities Study Agreement.

Appendix E. Cost Allocation Per Request
Scenario #1

(Including Previously Allocated Network Upgrades*)

Interconnection Request and Upgrades	Upgrade Type	Allocated Cost	Upgrade Cost
GEN-2017-108			
GEN-2017-108 Interconnection Costs See One-Line Diagram.	Current Study	$20,000,000	$20,000,000
	Current Study Total	$20,000,000	
	TOTAL CURRENT STUDY COSTS:	**$20,000,000**	

* Withdrawal of higher queued projects will cause a restudy and may result in higher costs

Appendix E. Cost Allocation Per Request Scenario #2

(Including Previously Allocated Network Upgrades*)

Interconnection Request and Upgrades	Upgrade Type	Allocated Cost	Upgrade Cost
GEN-2017-109			
Belfield - Dickinson 230kV CKT 1 Replace terminal equipment	Current Study	$200,000	$200,000
Dawson Creek - Fallon 115KV CKT 1 NRIS Only Required Upgrade: Rebuild approximately 26 miles of 115kV circuit from Dawson Creek - Fallon	Current Study	$15,600,000	$15,600,000
Dawson Creek - Lewis & Clark 115KV CKT 1 Rebuild approximately 50 miles of 115kV circuit from Dawson County - Lewis & Clark	Current Study	$37,500,000	$37,500,000
East Culberston - Wiliston 115kV CKT 1 Rebuild approximately 30 miles of 115kV circuit from Culberston - Williston	Current Study	$7,000,000	$7,000,000
Fort Thompson 345/230/13.8KV Transformer CKT 1 NRIS Only Required Upgrade: Replace Fort Thompson 345/230/13.8kV transformer CKT 1	Current Study	$6,700,000	$6,700,000
Fort Thompson 345/230/13.8KV Transformer CKT 2 NRIS Only Required Upgrade: Replace Fort Thompson 345/230/13.8kV transformer CKT 2	Current Study	$6,700,000	$6,700,000
Garrison - Stanton Tap 115kV CKT 1 NRIS Only Required Upgrade: Rebuild approximately 20 miles of 115kV from Garrison - Stanton Tap	Current Study	$16,000,000	$16,000,000
GEN-2017-109 Interconnection Costs See One-Line Diagram.	Current Study	$8,000,000	$8,000,000
GEN-2017-109 Tap - Dawson County 230kV CKT 1 Rebuild approximately 25 miles of 230kV circuit from GEN-2017-109 Tap - Dawson County	Current Study	$18,500,000	$18,500,000
GEN-2017-109 Tap - Dawson County 230kV CKT 2 Build approximately 25 miles of second 230kV circuit from GEN-2017-109 Tap - Dawson County	Current Study	$20,000,000	$20,000,000
Maurine 230/115/13.8KV Transformer CKT 1 NRIS Only Required Upgrade: Replace Maurine 230/115/13.8kV Transformer CKT 1	Current Study	$7,000,000	$7,000,000
MISO Affected System Review MISO Affected System Review Required	Current Study	$TBD	$TBD
MPC Affected System Review MPC Affected System Review Required	Current Study	$TBD	$TBD
Huron 345/230/13.8kV Transformer CKT 1 Replace Huron 345/230/13.8kV Transformer CKT 1	Previously Allocated		$5,000,000

* Withdrawal of higher queued projects will cause a restudy and may result in higher costs

Interconnection Request and Upgrades	Upgrade Type	Allocated Cost	Upgrade Cost
Kummer Ridge - Roundup Project Kummer Ridge - Roundup 345 kV Ckt 1 New Line per SPP-NTC-200417	Previously Allocated		$52,312,877
Maurine - Newell - Elk Creek - Rapid City 115kV CKT 1 NRIS Only Required Upgrade: Replace structures and terminal equipment	Previously Allocated		$8,529,876
Neset - Tande 230kV CKT 1 Build new 230kV line from Neset - Tande	Previously Allocated		$3,000,000
Tande 345/230 Substation Construct new 345kV Tande Substation & Tande 345/230/13kV transformer Construct new 345kV Tande Substation adjacent to the existing 230kV Neset Substation and	Previously Allocated		$18,000,000
	Current Study Total	$143,200,000	
	TOTAL CURRENT STUDY COSTS:	**$143,200,000***	

Total costs do no include potential stability mitigations as listed through out. Appendix E and F. Total cost does not include MISO and MPC Affected System costs.

* Withdrawal of higher queued projects will cause a restudy and may result in higher costs

11.6 F: COST ALLOCATION PER PROPOSED STUDY NETWORK UPGRADE

Important Note:

****WITHDRAWAL OF HIGHER QUEUED PROJECTS WILL CAUSE A RESTUDY AND MAY RESULT IN HIGHER INTERCONNECTION COSTS****

This section shows each Direct Assigned Facility and Network Upgrade and the Generator Interconnection Request Customer(s) which have an impact in this study assuming all higher queued projects remain in the queue and achieve commercial operation.

The required interconnection costs listed do not include all costs associated with the deliverability of the energy to final customers. These costs are determined by separate studies if the Customer submits a Transmission Service Request through SPP's Open Access Same Time Information System (OASIS) as required by Attachment Z1 of the SPP OATT. In addition, costs associated with a short circuit analysis will be allocated should the Interconnection Request Customer choose to execute a Facility Study Agreement.

There may be additional costs allocated to each Customer. See Appendix E for more details.

Appendix F. Cost Allocation by Upgrade Scenario #1

GEN-2017-108 Interconnection Costs		**$20,000,000**
See One-Line Diagram.		
	GEN-2017-108	$20,000,000
	Total Allocated Costs	**$20,000,000**

* Withdrawal of higher queued projects will cause a restudy and may result in higher costs

Appendix F. Cost Allocation by Upgrade
Scenario #2

Belfield - Dickinson 230kV CKT 1			**$200,000**
Replace terminal equipment			
	GEN-2017-109	$200,000	
	Total Allocated Costs	**$200,000**	
Dawson Creek - Fallon 115KV CKT 1			**$15,600,000**
NRIS Only Required Upgrade: Rebuild approximately 26 miles of 115kV circuit from Dawson Creek - Fallon			
	GEN-2017-109	$15,600,000	
	Total Allocated Costs	**$15,600,000**	
Dawson Creek - Lewis & Clark 115KV CKT 1			**$37,500,000**
Rebuild approximately 50 miles of 115kV circuit from Dawson County - Lewis & Clark			
	GEN-2017-109	$37,500,000	
	Total Allocated Costs	**$37,500,000**	
East Culberston - Wiliston 115kV CKT 1			**$7,000,000**
Rebuild approximately 30 miles of 115kV circuit from Culberston - Williston			
	GEN-2017-109	$7,000,000	
	Total Allocated Costs	**$7,000,000**	
Fort Thompson 345/230/13.8KV Transformer CKT 1			**$6,700,000**
NRIS Only Required Upgrade: Replace Fort Thompson 345/230/13.8kV transformer CKT 1			
	GEN-2017-109	$6,700,000	
	Total Allocated Costs	**$6,700,000**	
Fort Thompson 345/230/13.8KV Transformer CKT 2			**$6,700,000**
NRIS Only Required Upgrade: Replace Fort Thompson 345/230/13.8kV transformer CKT 2			
	GEN-2017-109	$6,700,000	
	Total Allocated Costs	**$6,700,000**	
Garrison - Stanton Tap 115kV CKT 1			**$16,000,000**
NRIS Only Required Upgrade: Rebuild approximately 20 miles of 115kV from Garrison - Stanton Tap			
	GEN-2017-109	$16,000,000	
	Total Allocated Costs	**$16,000,000**	

* Withdrawal of higher queued projects will cause a restudy and may result in higher costs

GEN-2017-109 Interconnection Costs			**$8,000,000**
See One-Line Diagram.			
	GEN-2017-109	$8,000,000	
	Total Allocated Costs	**$8,000,000**	
GEN-2017-109 Tap - Dawson County 230kV CKT 1			**$18,500,000**
Rebuild approximately 25 miles of 230kV circuit from GEN-2017-109 Tap - Dawson County			
	GEN-2017-109	$18,500,000	
	Total Allocated Costs	**$18,500,000**	
GEN-2017-109 Tap - Dawson County 230kV CKT 2			**$20,000,000**
Build approximately 25 miles of second 230kV circuit from GEN-2017-109 Tap - Dawson County			
	GEN-2017-109	$20,000,000	
	Total Allocated Costs	**$20,000,000**	
Maurine 230/115/13.8KV Transformer CKT 1			**$7,000,000**
NRIS Only Required Upgrade: Replace Maurine 230/115/13.8kV Transformer CKT 1			
	GEN-2017-109	$7,000,000	
	Total Allocated Costs	**$7,000,000**	
MISO Affected System Review			**$TBD***
MISO Affected System Review Required			
	GEN-2017-109	$TBD	
	Total Allocated Costs	**$TBD**	
MPC Affected System Review			**$TBD***
MPC Affected System Review Required			
	GEN-2017-109	$TBD	
	Total Allocated Costs	**$TBD**	

* Withdrawal of higher queued projects will cause a restudy and may result in higher costs

11.7 G: POWER FLOW ANALYSIS (CONSTRAINTS REQUIRING TRANSMISSION REINFORCEMENT)

Scenario Number	Scenario Description	Group Name
Scenario #1	Group 13HVER	13ALL
	Group 13 NRIS	13NR, 00NR (G17_108)
Scenario #2	Group 16 HVER	16ALL
	Group 16 NRIS	16NR, 00NR (G17_109)

SEASON	GROUP	SCENARIO	DIRECTION	SOURCE	MONITORED ELEMENT	RATE (MVA)	TDF	CONTINGENCY LOADING %	CONTINGENCY
17SP	13ALL	0	TO->FROM	G17_108	ARCHIE - MONTROSE 161KV CKT 1	223.3	0.35196	105.1088	CLINTON - MONTROSE 161KV CKT 1
20SP	13ALL	0	TO->FROM	G17_108	ARCHIE - MONTROSE 161KV CKT 1	223.5	0.35197	105.0574	CLINTON - MONTROSE 161KV CKT 1
17SP	13ALL	2	TO->FROM	G17_108	ARCHIE - MONTROSE 161KV CKT 1	223.3	0.35195	105.1536	CLINTON - MONTROSE 161KV CKT 1
20SP	13ALL	2	TO->FROM	G17_108	ARCHIE - MONTROSE 161KV CKT 1	223.5	0.35197	105.0574	CLINTON - MONTROSE 161KV CKT 1
17SP	13ALL	3	TO->FROM	G17_108	ARCHIE - MONTROSE 161KV CKT 1	223.3	0.35195	105.1536	CLINTON - MONTROSE 161KV CKT 1
20SP	13ALL	3	TO->FROM	G17_108	ARCHIE - MONTROSE 161KV CKT 1	223.5	0.35197	105.0574	CLINTON - MONTROSE 161KV CKT 1
25SP	16ALL	0	FROM->TO	G17_109	BELFIELD - DICKINSON 230KV CKT 1	264	0.29051	104.1712	BOWMAN - RHAME 4 230.00 230KV CKT 1
17SP	16ALL	0	FROM->TO	G17_109	BELFIELD - DICKINSON 230KV CKT 1	263.6	0.42844	102.8073	BELFIELD - CHARLIE CREEK 345KV CKT 1
17G	16ALL	0	FROM->TO	G17_109	BELFIELD - DICKINSON 230KV CKT 1	262.9	0.42827	102.442	BELFIELD - CHARLIE CREEK 345KV CKT 1
17SP	16ALL	0	FROM->TO	G17_109	BELFIELD - DICKINSON 230KV CKT 1	263.6	0.28975	102.1897	BOWMAN - RHAME 4 230.00 230KV CKT 1
16WP	16ALL	0	FROM->TO	G17_109	BELFIELD - DICKINSON 230KV CKT 1	263.9	0.42803	102.1341	BELFIELD - CHARLIE CREEK 345KV CKT 1
20SP	16ALL	0	FROM->TO	G17_109	BELFIELD - DICKINSON 230KV CKT 1	264	0.29024	101.5909	BOWMAN - RHAME 4 230.00 230KV CKT 1
17G	16NR	0	FROM->TO	G17_109	BEULAH - STANTONTAP 7115.00 115KV CKT 1	121	0.04457	105.754	CENTER - COYOTE 345KV CKT 1
16WP	00NR	0	FROM->TO	G17_109	BEULAH - STANTONTAP 7115.00 115KV CKT 1	131.9	0.04166	104.3451	CENTER - COYOTE 345KV CKT 1
20WP	00NR	0	FROM->TO	G17_109	BEULAH - STANTONTAP 7115.00 115KV CKT 1	132	0.03903	102.8709	CENTER - COYOTE 345KV CKT 1
17SP	16ALL	0	TO->FROM	G17_109	BISON - HETINGER 230KV CKT 1	212.8	0.15981	108.6617	System Intact
25SP	16ALL	0	TO->FROM	G17_109	BISON - HETINGER 230KV CKT 1	212.6	0.15744	108.1787	System Intact
20SP	16ALL	0	TO->FROM	G17_109	BISON - HETINGER 230KV CKT 1	213	0.1569	103.8535	System Intact
17SP	16ALL	0	FROM->TO	G17_109	CIRCLE - DAWSON CREEK 115KV CKT 1	77.7	0.43912	278.5946	DAWSON CREEK - G17109_T(P) 230.00 230KV CKT 1
17SP	00NR	0	FROM->TO	G17_109	CIRCLE - DAWSON CREEK 115KV CKT 1	77.5	0.42841	276.7628	DAWSON CREEK - G17109_T(P) 230.00 230KV CKT 1
17G	16NR	0	FROM->TO	G17_109	CIRCLE - DAWSON CREEK 115KV CKT 1	77.8	0.42703	272.3002	DAWSON CREEK - G17109_T(P) 230.00 230KV CKT 1
17G	16ALL	0	FROM->TO	G17_109	CIRCLE - DAWSON CREEK 115KV CKT 1	78.7	0.43828	270.0534	DAWSON CREEK - G17109_T(P) 230.00 230KV CKT 1
25SP	16ALL	0	FROM->TO	G17_109	CIRCLE - DAWSON CREEK 115KV CKT 1	78.1	0.43911	249.9053	DAWSON CREEK - G17109_T(P) 230.00 230KV CKT 1
20SP	16ALL	0	FROM->TO	G17_109	CIRCLE - DAWSON CREEK 115KV CKT 1	78.5	0.43899	241.9465	DAWSON CREEK - G17109_T(P) 230.00 230KV CKT 1
25SP	00NR	0	FROM->TO	G17_109	CIRCLE - DAWSON CREEK 115KV CKT 1	78.1	0.42834	241.1893	DAWSON CREEK - G17109_T(P) 230.00 230KV CKT 1
20SP	00NR	0	FROM->TO	G17_109	CIRCLE - DAWSON CREEK 115KV CKT 1	78.3	0.42831	239.7946	DAWSON CREEK - G17109_T(P) 230.00 230KV CKT 1
20L	16ALL	0	FROM->TO	G17_109	CIRCLE - DAWSON CREEK 115KV CKT 1	78.7	0.43619	235.2071	DAWSON CREEK - G17109_T(P) 230.00 230KV CKT 1
20L	16NR	0	FROM->TO	G17_109	CIRCLE - DAWSON CREEK 115KV CKT 1	78.7	0.42959	235.0302	DAWSON CREEK - G17109_T(P) 230.00 230KV CKT 1
16WP	16ALL	0	FROM->TO	G17_109	CIRCLE - DAWSON CREEK 115KV CKT 1	86.9	0.43855	234.3383	DAWSON CREEK - G17109_T(P) 230.00 230KV CKT 1
16WP	00NR	0	FROM->TO	G17_109	CIRCLE - DAWSON CREEK 115KV CKT 1	87.3	0.42846	216.0449	DAWSON CREEK - G17109_T(P) 230.00 230KV CKT 1
20WP	16ALL	0	FROM->TO	G17_109	CIRCLE - DAWSON CREEK 115KV CKT 1	87.4	0.43838	202.6133	DAWSON CREEK - G17109_T(P) 230.00 230KV CKT 1
20WP	00NR	0	FROM->TO	G17_109	CIRCLE - DAWSON CREEK 115KV CKT 1	87.3	0.42461	196.3061	DAWSON CREEK - G17109_T(P) 230.00 230KV CKT 1
17SP	16ALL	0	TO->FROM	G17_109	CIRCLE - G12_012IST 115.00 115KV CKT 1	77.2	0.43912	299.0518	DAWSON CREEK - G17109_T(P) 230.00 230KV CKT 1
17G	16ALL	0	TO->FROM	G17_109	CIRCLE - G12_012IST 115.00 115KV CKT 1	76.7	0.43828	298.0861	DAWSON CREEK - G17109_T(P) 230.00 230KV CKT 1
17SP	00NR	0	TO->FROM	G17_109	CIRCLE - G12_012IST 115.00 115KV CKT 1	77	0.42841	297.7808	DAWSON CREEK - G17109_T(P) 230.00 230KV CKT 1
25SP	16ALL	0	TO->FROM	G17_109	CIRCLE - G12_012IST 115.00 115KV CKT 1	77.2	0.43911	296.342	DAWSON CREEK - G17109_T(P) 230.00 230KV CKT 1
17G	16NR	0	TO->FROM	G17_109	CIRCLE - G12_012IST 115.00 115KV CKT 1	77.4	0.42703	295.0253	DAWSON CREEK - G17109_T(P) 230.00 230KV CKT 1
25SP	00NR	0	TO->FROM	G17_109	CIRCLE - G12_012IST 115.00 115KV CKT 1	77.2	0.42834	287.5244	DAWSON CREEK - G17109_T(P) 230.00 230KV CKT 1
20SP	16ALL	0	TO->FROM	G17_109	CIRCLE - G12_012IST 115.00 115KV CKT 1	77.5	0.43899	287.52	DAWSON CREEK - G17109_T(P) 230.00 230KV CKT 1
20SP	00NR	0	TO->FROM	G17_109	CIRCLE - G12_012IST 115.00 115KV CKT 1	77.5	0.42831	285.1086	DAWSON CREEK - G17109_T(P) 230.00 230KV CKT 1
20L	16NR	0	TO->FROM	G17_109	CIRCLE - G12_012IST 115.00 115KV CKT 1	77.2	0.42959	270.5555	DAWSON CREEK - G17109_T(P) 230.00 230KV CKT 1
20L	16ALL	0	TO->FROM	G17_109	CIRCLE - G12_012IST 115.00 115KV CKT 1	77.3	0.43619	270.2561	DAWSON CREEK - G17109_T(P) 230.00 230KV CKT 1
16WP	16ALL	0	TO->FROM	G17_109	CIRCLE - G12_012IST 115.00 115KV CKT 1	86.5	0.43855	259.1214	DAWSON CREEK - G17109_T(P) 230.00 230KV CKT 1
20WP	16ALL	0	TO->FROM	G17_109	CIRCLE - G12_012IST 115.00 115KV CKT 1	86.9	0.43838	251.42	DAWSON CREEK - G17109_T(P) 230.00 230KV CKT 1
20WP	00NR	0	TO->FROM	G17_109	CIRCLE - G12_012IST 115.00 115KV CKT 1	86.9	0.42461	244.9657	DAWSON CREEK - G17109_T(P) 230.00 230KV CKT 1
16WP	00NR	0	TO->FROM	G17_109	CIRCLE - G12_012IST 115.00 115KV CKT 1	86.7	0.42846	240.3774	DAWSON CREEK - G17109_T(P) 230.00 230KV CKT 1
17G	16NR	0	TO->FROM	G17_109	CIRCLE - G12_012IST 115.00 115KV CKT 1	77.4	0.03823	116.0641	CULBERTSN E7115.00 - WILISTON 115KV CKT 1
17SP	00NR	0	TO->FROM	G17_109	CIRCLE - G12_012IST 115.00 115KV CKT 1	77	0.03947	116.0135	CULBERTSN E7115.00 - WILISTON 115KV CKT 1
20SP	00NR	0	TO->FROM	G17_109	CIRCLE - G12_012IST 115.00 115KV CKT 1	77.5	0.03974	114.3443	CULBERTSN E7115.00 - WILISTON 115KV CKT 1
25SP	00NR	0	TO->FROM	G17_109	CIRCLE - G12_012IST 115.00 115KV CKT 1	77.2	0.03975	113.7565	CULBERTSN E7115.00 - WILISTON 115KV CKT 1
20WP	00NR	0	TO->FROM	G17_109	CIRCLE - G12_012IST 115.00 115KV CKT 1	86.9	0.03083	106.98	CULBERTSN E7115.00 - WILISTON 115KV CKT 1
20L	16NR	0	TO->FROM	G17_109	CIRCLE - G12_012IST 115.00 115KV CKT 1	77.2	0.04033	104.4114	CULBERTSN E7115.00 - WILISTON 115KV CKT 1
17SP	13ALL	0	TO->FROM	G17_109	CIRCLE - G12_012IST 115.00 115KV CKT 1	78.4	0.43926	102.9504	DAWSON CREEK - G17109_T(P) 230.00 230KV CKT 1

SEASON	GROUP	SCENARIO	DIRECTION	SOURCE	MONITORED ELEMENT	RATE (MVA)	TDF	CONTINGENCY LOADING %	CONTINGENCY
25SP	13ALL	0	TO->FROM	G17_109	CIRCLE - G12_012IST 115.00 115KV CKT 1	78.3	0.43921	101.469	DAWSON CREEK - G17109_T(P) 230.00 230KV CKT 1
16WP	00NR	0	FROM->TO	G17_109	COALHILL4 230.00 - FT PECK 230KV CKT 1	174.8	1	182.7803	DAWSON CREEK - G17109_T(P) 230.00 230KV CKT 1
16WP	16ALL	0	FROM->TO	G17_109	COALHILL4 230.00 - FT PECK 230KV CKT 1	175.1	1	182.2958	DAWSON CREEK - G17109_T(P) 230.00 230KV CKT 1
17SP	00NR	0	FROM->TO	G17_109	COALHILL4 230.00 - FT PECK 230KV CKT 1	175.2	1	182.0776	DAWSON CREEK - G17109_T(P) 230.00 230KV CKT 1
17SP	16ALL	0	FROM->TO	G17_109	COALHILL4 230.00 - FT PECK 230KV CKT 1	175.5	1	181.7664	DAWSON CREEK - G17109_T(P) 230.00 230KV CKT 1
17G	16NR	0	FROM->TO	G17_109	COALHILL4 230.00 - FT PECK 230KV CKT 1	175.5	1	181.7664	DAWSON CREEK - G17109_T(P) 230.00 230KV CKT 1
17G	16ALL	0	FROM->TO	G17_109	COALHILL4 230.00 - FT PECK 230KV CKT 1	175.8	1	181.5131	DAWSON CREEK - G17109_T(P) 230.00 230KV CKT 1
20L	16NR	0	FROM->TO	G17_109	COALHILL4 230.00 - FT PECK 230KV CKT 1	175.8	1	174.1183	DAWSON CREEK - G17109_T(P) 230.00 230KV CKT 1
20L	16ALL	0	FROM->TO	G17_109	COALHILL4 230.00 - FT PECK 230KV CKT 1	175.9	1	174.0193	DAWSON CREEK - G17109_T(P) 230.00 230KV CKT 1
25SP	00NR	0	FROM->TO	G17_109	COALHILL4 230.00 - FT PECK 230KV CKT 1	175.7	1	170.7456	DAWSON CREEK - G17109_T(P) 230.00 230KV CKT 1
20WP	00NR	0	FROM->TO	G17_109	COALHILL4 230.00 - FT PECK 230KV CKT 1	175.6	1	170.7289	DAWSON CREEK - G17109_T(P) 230.00 230KV CKT 1
20SP	00NR	0	FROM->TO	G17_109	COALHILL4 230.00 - FT PECK 230KV CKT 1	175.8	1	170.6485	DAWSON CREEK - G17109_T(P) 230.00 230KV CKT 1
20WP	16ALL	0	FROM->TO	G17_109	COALHILL4 230.00 - FT PECK 230KV CKT 1	175.7	1	170.6318	DAWSON CREEK - G17109_T(P) 230.00 230KV CKT 1
25SP	16ALL	0	FROM->TO	G17_109	COALHILL4 230.00 - FT PECK 230KV CKT 1	175.8	1	170.5916	DAWSON CREEK - G17109_T(P) 230.00 230KV CKT 1
20SP	16ALL	0	FROM->TO	G17_109	COALHILL4 230.00 - FT PECK 230KV CKT 1	175.9	1	170.5515	DAWSON CREEK - G17109_T(P) 230.00 230KV CKT 1
16WP	00NR	0	TO->FROM	G17_109	COALHILL4 230.00 - G17109_T(P) 230.00 230KV CKT 1	174.8	1	182.7803	DAWSON CREEK - G17109_T(P) 230.00 230KV CKT 1
20WP	00NR	0	TO->FROM	G17_109	COALHILL4 230.00 - G17109_T(P) 230.00 230KV CKT 1	175	1	182.6857	DAWSON CREEK - G17109_T(P) 230.00 230KV CKT 1
20WP	16ALL	0	TO->FROM	G17_109	COALHILL4 230.00 - G17109_T(P) 230.00 230KV CKT 1	175.1	1	182.5243	DAWSON CREEK - G17109_T(P) 230.00 230KV CKT 1
25SP	00NR	0	TO->FROM	G17_109	COALHILL4 230.00 - G17109_T(P) 230.00 230KV CKT 1	175.2	1	182.363	DAWSON CREEK - G17109_T(P) 230.00 230KV CKT 1
16WP	16ALL	0	TO->FROM	G17_109	COALHILL4 230.00 - G17109_T(P) 230.00 230KV CKT 1	175.1	1	182.2958	DAWSON CREEK - G17109_T(P) 230.00 230KV CKT 1
20SP	00NR	0	TO->FROM	G17_109	COALHILL4 230.00 - G17109_T(P) 230.00 230KV CKT 1	175.4	1	182.1551	DAWSON CREEK - G17109_T(P) 230.00 230KV CKT 1
25SP	16ALL	0	TO->FROM	G17_109	COALHILL4 230.00 - G17109_T(P) 230.00 230KV CKT 1	175.4	1	182.0981	DAWSON CREEK - G17109_T(P) 230.00 230KV CKT 1
17SP	00NR	0	TO->FROM	G17_109	COALHILL4 230.00 - G17109_T(P) 230.00 230KV CKT 1	175.2	1	182.0776	DAWSON CREEK - G17109_T(P) 230.00 230KV CKT 1
20L	16ALL	0	TO->FROM	G17_109	COALHILL4 230.00 - G17109_T(P) 230.00 230KV CKT 1	175.6	1	182.0615	DAWSON CREEK - G17109_T(P) 230.00 230KV CKT 1
20L	16NR	0	TO->FROM	G17_109	COALHILL4 230.00 - G17109_T(P) 230.00 230KV CKT 1	175.6	1	182.0615	DAWSON CREEK - G17109_T(P) 230.00 230KV CKT 1
20SP	16ALL	0	TO->FROM	G17_109	COALHILL4 230.00 - G17109_T(P) 230.00 230KV CKT 1	175.5	1	182.0513	DAWSON CREEK - G17109_T(P) 230.00 230KV CKT 1
17SP	16ALL	0	TO->FROM	G17_109	COALHILL4 230.00 - G17109_T(P) 230.00 230KV CKT 1	175.5	1	181.7664	DAWSON CREEK - G17109_T(P) 230.00 230KV CKT 1
17G	16NR	0	TO->FROM	G17_109	COALHILL4 230.00 - G17109_T(P) 230.00 230KV CKT 1	175.5	1	181.7664	DAWSON CREEK - G17109_T(P) 230.00 230KV CKT 1
17G	16ALL	0	TO->FROM	G17_109	COALHILL4 230.00 - G17109_T(P) 230.00 230KV CKT 1	175.8	1	181.5131	DAWSON CREEK - G17109_T(P) 230.00 230KV CKT 1
17G	16ALL	0	TO->FROM	G17_109	CULBERTSN E7115.00 - CULBERTSON 115KV CKT 1	127.9	0.55586	177.2666	DAWSON CREEK - G17109_T(P) 230.00 230KV CKT 1
17SP	16ALL	0	TO->FROM	G17_109	CULBERTSN E7115.00 - CULBERTSON 115KV CKT 1	127.7	0.55707	172.1284	DAWSON CREEK - G17109_T(P) 230.00 230KV CKT 1
17G	16NR	0	TO->FROM	G17_109	CULBERTSN E7115.00 - CULBERTSON 115KV CKT 1	127.7	0.54402	171.8766	DAWSON CREEK - G17109_T(P) 230.00 230KV CKT 1
16WP	16ALL	0	TO->FROM	G17_109	CULBERTSN E7115.00 - CULBERTSON 115KV CKT 1	131.6	0.55636	165.5988	DAWSON CREEK - G17109_T(P) 230.00 230KV CKT 1
17SP	00NR	0	TO->FROM	G17_109	CULBERTSN E7115.00 - CULBERTSON 115KV CKT 1	127.8	0.54803	159.9919	DAWSON CREEK - G17109_T(P) 230.00 230KV CKT 1
16WP	00NR	0	TO->FROM	G17_109	CULBERTSN E7115.00 - CULBERTSON 115KV CKT 1	131.4	0.54807	158.7385	DAWSON CREEK - G17109_T(P) 230.00 230KV CKT 1
20SP	16ALL	0	TO->FROM	G17_109	CULBERTSN E7115.00 - CULBERTSON 115KV CKT 1	127.9	0.55737	147.5497	DAWSON CREEK - G17109_T(P) 230.00 230KV CKT 1
20L	16ALL	0	TO->FROM	G17_109	CULBERTSN E7115.00 - CULBERTSON 115KV CKT 1	128	0.55381	143.9781	DAWSON CREEK - G17109_T(P) 230.00 230KV CKT 1
25SP	16ALL	0	TO->FROM	G17_109	CULBERTSN E7115.00 - CULBERTSON 115KV CKT 1	128	0.55747	141.8406	DAWSON CREEK - G17109_T(P) 230.00 230KV CKT 1
20WP	16ALL	0	TO->FROM	G17_109	CULBERTSN E7115.00 - CULBERTSON 115KV CKT 1	131.9	0.55681	140.0243	DAWSON CREEK - G17109_T(P) 230.00 230KV CKT 1
20L	16NR	0	TO->FROM	G17_109	CULBERTSN E7115.00 - CULBERTSON 115KV CKT 1	128	0.54803	139.5075	DAWSON CREEK - G17109_T(P) 230.00 230KV CKT 1
20SP	00NR	0	TO->FROM	G17_109	CULBERTSN E7115.00 - CULBERTSON 115KV CKT 1	128	0.54924	137.4662	DAWSON CREEK - G17109_T(P) 230.00 230KV CKT 1
25SP	00NR	0	TO->FROM	G17_109	CULBERTSN E7115.00 - CULBERTSON 115KV CKT 1	128	0.54926	135.0494	DAWSON CREEK - G17109_T(P) 230.00 230KV CKT 1
20WP	00NR	0	TO->FROM	G17_109	CULBERTSN E7115.00 - CULBERTSON 115KV CKT 1	132	0.55296	128.7479	DAWSON CREEK - G17109_T(P) 230.00 230KV CKT 1
17G	16ALL	0	FROM->TO	G17_109	CULBERTSN E7115.00 - WILISTON 115KV CKT 1	127	0.55558	248.1197	DAWSON CREEK - G17109_T(P) 230.00 230KV CKT 1
17SP	16ALL	0	FROM->TO	G17_109	CULBERTSN E7115.00 - WILISTON 115KV CKT 1	126	0.55689	245.6667	DAWSON CREEK - G17109_T(P) 230.00 230KV CKT 1
16WP	16ALL	0	FROM->TO	G17_109	CULBERTSN E7115.00 - WILISTON 115KV CKT 1	129	0.55612	237.8543	DAWSON CREEK - G17109_T(P) 230.00 230KV CKT 1
17SP	00NR	0	FROM->TO	G17_109	CULBERTSN E7115.00 - WILISTON 115KV CKT 1	125	0.54648	235.4189	DAWSON CREEK - G17109_T(P) 230.00 230KV CKT 1
17G	16NR	0	FROM->TO	G17_109	CULBERTSN E7115.00 - WILISTON 115KV CKT 1	125.1	0.54211	233.4734	DAWSON CREEK - G17109_T(P) 230.00 230KV CKT 1
20WP	16ALL	0	FROM->TO	G17_109	CULBERTSN E7115.00 - WILISTON 115KV CKT 1	128.8	0.55655	228.3292	DAWSON CREEK - G17109_T(P) 230.00 230KV CKT 1
20SP	16ALL	0	FROM->TO	G17_109	CULBERTSN E7115.00 - WILISTON 115KV CKT 1	126.6	0.5572	221.128	DAWSON CREEK - G17109_T(P) 230.00 230KV CKT 1
20L	16ALL	0	FROM->TO	G17_109	CULBERTSN E7115.00 - WILISTON 115KV CKT 1	125.8	0.55312	217.8983	DAWSON CREEK - G17109_T(P) 230.00 230KV CKT 1
25SP	16ALL	0	FROM->TO	G17_109	CULBERTSN E7115.00 - WILISTON 115KV CKT 1	126.7	0.55731	215.8579	DAWSON CREEK - G17109_T(P) 230.00 230KV CKT 1
20WP	00NR	0	FROM->TO	G17_109	CULBERTSN E7115.00 - WILISTON 115KV CKT 1	129	0.52791	211.187	DAWSON CREEK - G17109_T(P) 230.00 230KV CKT 1

SEASON	GROUP	SCENARIO	DIRECTION	SOURCE	MONITORED ELEMENT	RATE (MVA)	TDF	CONTINGENCY LOADING %	CONTINGENCY
20SP	00NR	0	FROM->TO	G17_109	CULBERTSN E7115.00 - WILISTON 115KV CKT 1	126.7	0.54776	210.7997	DAWSON CREEK - G17109_T(P) 230.00 230KV CKT 1
25SP	00NR	0	FROM->TO	G17_109	CULBERTSN E7115.00 - WILISTON 115KV CKT 1	126.7	0.54779	208.5184	DAWSON CREEK - G17109_T(P) 230.00 230KV CKT 1
20L	16NR	0	FROM->TO	G17_109	CULBERTSN E7115.00 - WILISTON 115KV CKT 1	126.6	0.54586	198.9536	DAWSON CREEK - G17109_T(P) 230.00 230KV CKT 1
16WP	00NR	0	FROM->TO	G17_109	CULBERTSN E7115.00 - WILISTON 115KV CKT 1	131.6	0.54653	182.5149	DAWSON CREEK - G17109_T(P) 230.00 230KV CKT 1
17SP	13ALL	0	FROM->TO	G17_109	CULBERTSN E7115.00 - WILISTON 115KV CKT 1	126.9	0.55703	111.9503	DAWSON CREEK - G17109_T(P) 230.00 230KV CKT 1
17G	16ALL	0	FROM->TO	G17_109	CULBERTSN E7115.00 - WILISTON 115KV CKT 1	118.9	0.11343	111.5122	System Intact
16WP	16ALL	0	FROM->TO	G17_109	CULBERTSN E7115.00 - WILISTON 115KV CKT 1	116.7	0.11376	108.497	System Intact
20WP	16ALL	0	FROM->TO	G17_109	CULBERTSN E7115.00 - WILISTON 115KV CKT 1	116.5	0.11415	108.4669	System Intact
17G	16NR	0	FROM->TO	G17_109	CULBERTSN E7115.00 - WILISTON 115KV CKT 1	125.1	0.18219	108.3939	BEAVERHILL4 230.00 - MEDORA 230KV CKT 1
17SP	00NR	0	FROM->TO	G17_109	CULBERTSN E7115.00 - WILISTON 115KV CKT 1	125	0.04412	107.2147	COALHILL4 230.00 - FT PECK 230KV CKT 1
17SP	00NR	0	FROM->TO	G17_109	CULBERTSN E7115.00 - WILISTON 115KV CKT 1	125	0.04412	107.2147	COALHILL4 230.00 - G17109_T(P) 230.00 230KV CKT 1
17G	16NR	0	FROM->TO	G17_109	CULBERTSN E7115.00 - WILISTON 115KV CKT 1	125.1	0.18219	106.5554	BELFIELD - MEDORA 230KV CKT 1
17G	16NR	0	FROM->TO	G17_109	CULBERTSN E7115.00 - WILISTON 115KV CKT 1	125.1	0.03976	105.2943	COALHILL4 230.00 - FT PECK 230KV CKT 1
17G	16NR	0	FROM->TO	G17_109	CULBERTSN E7115.00 - WILISTON 115KV CKT 1	125.1	0.03976	105.2943	COALHILL4 230.00 - G17109_T(P) 230.00 230KV CKT 1
17SP	00NR	0	FROM->TO	G17_109	CULBERTSN E7115.00 - WILISTON 115KV CKT 1	125	0.18529	105.0342	BEAVERHILL4 230.00 - MEDORA 230KV CKT 1
17SP	16ALL	0	FROM->TO	G17_109	CULBERTSN E7115.00 - WILISTON 115KV CKT 1	117.8	0.11409	104.7131	System Intact
17SP	00NR	0	FROM->TO	G17_109	CULBERTSN E7115.00 - WILISTON 115KV CKT 1	125	0.18529	104.1542	BEAVERHILL4 230.00 - DAWSON CREEK 230KV CKT 1
17SP	00NR	0	FROM->TO	G17_109	CULBERTSN E7115.00 - WILISTON 115KV CKT 1	125	0.18529	103.1942	BELFIELD - MEDORA 230KV CKT 1
17SP	00NR	0	FROM->TO	G17_109	CULBERTSN E7115.00 - WILISTON 115KV CKT 1	125	0.11018	102.9261	CIRCLE - G12_012IST 115.00 115KV CKT 1
17G	16NR	0	FROM->TO	G17_109	CULBERTSN E7115.00 - WILISTON 115KV CKT 1	125.1	0.1071	102.6155	CIRCLE - G12_012IST 115.00 115KV CKT 1
20WP	00NR	0	FROM->TO	G17_109	CULBERTSN E7115.00 - WILISTON 115KV CKT 1	129	0.09232	100.0329	CIRCLE - G12_012IST 115.00 115KV CKT 1
17G	16ALL	0	TO->FROM	G17_109	CULBERTSON - POPLAR 115KV CKT 1	88	0.55586	276.7318	DAWSON CREEK - G17109_T(P) 230.00 230KV CKT 1
16WP	16ALL	0	TO->FROM	G17_109	CULBERTSON - POPLAR 115KV CKT 1	87.9	0.55636	272.6143	DAWSON CREEK - G17109_T(P) 230.00 230KV CKT 1
17SP	16ALL	0	TO->FROM	G17_109	CULBERTSON - POPLAR 115KV CKT 1	88	0.55707	271.6	DAWSON CREEK - G17109_T(P) 230.00 230KV CKT 1
17G	16NR	0	TO->FROM	G17_109	CULBERTSON - POPLAR 115KV CKT 1	87.9	0.54402	268.8127	DAWSON CREEK - G17109_T(P) 230.00 230KV CKT 1
16WP	00NR	0	TO->FROM	G17_109	CULBERTSON - POPLAR 115KV CKT 1	87.7	0.54807	262.6937	DAWSON CREEK - G17109_T(P) 230.00 230KV CKT 1
17SP	00NR	0	TO->FROM	G17_109	CULBERTSON - POPLAR 115KV CKT 1	88	0.54803	254.17	DAWSON CREEK - G17109_T(P) 230.00 230KV CKT 1
20SP	16ALL	0	TO->FROM	G17_109	CULBERTSON - POPLAR 115KV CKT 1	88	0.55737	235.3591	DAWSON CREEK - G17109_T(P) 230.00 230KV CKT 1
20WP	16ALL	0	TO->FROM	G17_109	CULBERTSON - POPLAR 115KV CKT 1	88	0.55681	233.2864	DAWSON CREEK - G17109_T(P) 230.00 230KV CKT 1
25SP	16ALL	0	TO->FROM	G17_109	CULBERTSON - POPLAR 115KV CKT 1	87.9	0.55747	228.2776	DAWSON CREEK - G17109_T(P) 230.00 230KV CKT 1
20L	16ALL	0	TO->FROM	G17_109	CULBERTSON - POPLAR 115KV CKT 1	88	0.55381	222.0364	DAWSON CREEK - G17109_T(P) 230.00 230KV CKT 1
20SP	00NR	0	TO->FROM	G17_109	CULBERTSON - POPLAR 115KV CKT 1	87.9	0.54924	221.225	DAWSON CREEK - G17109_T(P) 230.00 230KV CKT 1
25SP	00NR	0	TO->FROM	G17_109	CULBERTSON - POPLAR 115KV CKT 1	87.9	0.54926	218.502	DAWSON CREEK - G17109_T(P) 230.00 230KV CKT 1
20WP	00NR	0	TO->FROM	G17_109	CULBERTSON - POPLAR 115KV CKT 1	87.9	0.55296	217.0048	DAWSON CREEK - G17109_T(P) 230.00 230KV CKT 1
20L	16NR	0	TO->FROM	G17_109	CULBERTSON - POPLAR 115KV CKT 1	88	0.54803	215.5336	DAWSON CREEK - G17109_T(P) 230.00 230KV CKT 1
25SP	00NR	0	FROM->TO	G17_109	DAWSON CREEK - FALLON 115KV CKT 1	88	0.07871	124.4173	DAWSON CREEK - MILES CITY EAST 230KV CKT 1
20SP	00NR	0	FROM->TO	G17_109	DAWSON CREEK - FALLON 115KV CKT 1	87.9	0.07869	118.1807	DAWSON CREEK - MILES CITY EAST 230KV CKT 1
17SP	00NR	0	FROM->TO	G17_109	DAWSON CREEK - FALLON 115KV CKT 1	87.8	0.07896	108.5048	DAWSON CREEK - MILES CITY EAST 230KV CKT 1
20L	16NR	0	FROM->TO	G17_109	DAWSON CREEK - FALLON 115KV CKT 1	87.7	0.07894	103.4901	DAWSON CREEK - MILES CITY EAST 230KV CKT 1
20WP	00NR	0	FROM->TO	G17_109	DAWSON CREEK - FALLON 115KV CKT 1	88	0.07799	102.2236	DAWSON CREEK - MILES CITY EAST 230KV CKT 1
17SP	16ALL	0	TO->FROM	G17_109	DAWSON CREEK - G17109_T(P) 230.00 230KV CKT 1	176	0.95223	254.0114	CULBERTSN E7115.00 - WILISTON 115KV CKT 1
17G	16ALL	0	TO->FROM	G17_109	DAWSON CREEK - G17109_T(P) 230.00 230KV CKT 1	175.9	0.95052	253.3121	CULBERTSN E7115.00 - WILISTON 115KV CKT 1
16WP	16ALL	0	TO->FROM	G17_109	DAWSON CREEK - G17109_T(P) 230.00 230KV CKT 1	176	0.95116	248.4273	CULBERTSN E7115.00 - WILISTON 115KV CKT 1
17SP	00NR	0	TO->FROM	G17_109	DAWSON CREEK - G17109_T(P) 230.00 230KV CKT 1	176	0.93542	246.7241	CULBERTSN E7115.00 - WILISTON 115KV CKT 1
17G	16NR	0	TO->FROM	G17_109	DAWSON CREEK - G17109_T(P) 230.00 230KV CKT 1	176	0.93091	244.5973	CULBERTSN E7115.00 - WILISTON 115KV CKT 1
20WP	16ALL	0	TO->FROM	G17_109	DAWSON CREEK - G17109_T(P) 230.00 230KV CKT 1	176	0.95136	234.2682	CULBERTSN E7115.00 - WILISTON 115KV CKT 1
17SP	16ALL	0	TO->FROM	G17_109	DAWSON CREEK - G17109_T(P) 230.00 230KV CKT 1	176	0.95234	233.6386	POPLAR - WOLF POINT 115KV CKT 1
25SP	16ALL	0	TO->FROM	G17_109	DAWSON CREEK - G17109_T(P) 230.00 230KV CKT 1	176	0.95255	233.4023	CULBERTSN E7115.00 - WILISTON 115KV CKT 1
20SP	16ALL	0	TO->FROM	G17_109	DAWSON CREEK - G17109_T(P) 230.00 230KV CKT 1	176	0.95236	233.2454	CULBERTSN E7115.00 - WILISTON 115KV CKT 1
17SP	16ALL	0	TO->FROM	G17_109	DAWSON CREEK - G17109_T(P) 230.00 230KV CKT 1	160	0.88145	231.5275	System Intact
17G	16ALL	0	TO->FROM	G17_109	DAWSON CREEK - G17109_T(P) 230.00 230KV CKT 1	175.9	0.95069	231.5202	POPLAR - WOLF POINT 115KV CKT 1
16WP	16ALL	0	TO->FROM	G17_109	DAWSON CREEK - G17109_T(P) 230.00 230KV CKT 1	176	0.95131	229.3136	POPLAR - WOLF POINT 115KV CKT 1
17SP	16ALL	0	TO->FROM	G17_109	DAWSON CREEK - G17109_T(P) 230.00 230KV CKT 1	176	0.95234	229.15	CULBERTSON - POPLAR 115KV CKT 1

SEASON	GROUP	SCENARIO	DIRECTION	SOURCE	MONITORED ELEMENT	RATE (MVA)	TDF	CONTINGENCY LOADING %	CONTINGENCY
17SP	00NR	0	TO->FROM	G17_109	DAWSON CREEK - G17109_T(P) 230.00 230KV CKT 1	160	0.86641	228.532	System Intact
17G	16NR	0	TO->FROM	G17_109	DAWSON CREEK - G17109_T(P) 230.00 230KV CKT 1	176	0.93209	228.3345	POPLAR - WOLF POINT 115KV CKT 1
17G	16ALL	0	TO->FROM	G17_109	DAWSON CREEK - G17109_T(P) 230.00 230KV CKT 1	175.9	0.95069	228.0523	CULBERTSON - POPLAR 115KV CKT 1
17G	16ALL	0	TO->FROM	G17_109	DAWSON CREEK - G17109_T(P) 230.00 230KV CKT 1	159.9	0.88015	227.157	System Intact
20SP	00NR	0	TO->FROM	G17_109	DAWSON CREEK - G17109_T(P) 230.00 230KV CKT 1	176	0.93633	226.9464	CULBERTSN E7115.00 - WILISTON 115KV CKT 1
17SP	16ALL	0	TO->FROM	G17_109	DAWSON CREEK - G17109_T(P) 230.00 230KV CKT 1	176	0.88174	226.825	CIRCLE - G12_012IST 115.00 115KV CKT 1
17G	16NR	0	TO->FROM	G17_109	DAWSON CREEK - G17109_T(P) 230.00 230KV CKT 1	160	0.86379	226.383	System Intact
25SP	00NR	0	TO->FROM	G17_109	DAWSON CREEK - G17109_T(P) 230.00 230KV CKT 1	176	0.93638	226.3305	CULBERTSN E7115.00 - WILISTON 115KV CKT 1
17SP	00NR	0	TO->FROM	G17_109	DAWSON CREEK - G17109_T(P) 230.00 230KV CKT 1	176	0.93638	226.2168	POPLAR - WOLF POINT 115KV CKT 1
17G	16NR	0	TO->FROM	G17_109	DAWSON CREEK - G17109_T(P) 230.00 230KV CKT 1	176	0.93209	224.9254	CULBERTSON - POPLAR 115KV CKT 1
16WP	16ALL	0	TO->FROM	G17_109	DAWSON CREEK - G17109_T(P) 230.00 230KV CKT 1	176	0.95131	224.7682	CULBERTSON - POPLAR 115KV CKT 1
20L	16ALL	0	TO->FROM	G17_109	DAWSON CREEK - G17109_T(P) 230.00 230KV CKT 1	175.8	0.94653	224.562	CULBERTSN E7115.00 - WILISTON 115KV CKT 1
17SP	00NR	0	TO->FROM	G17_109	DAWSON CREEK - G17109_T(P) 230.00 230KV CKT 1	176	0.86471	224.3791	CIRCLE - G12_012IST 115.00 115KV CKT 1
16WP	16ALL	0	TO->FROM	G17_109	DAWSON CREEK - G17109_T(P) 230.00 230KV CKT 1	160	0.88058	224.1875	System Intact
17G	16ALL	0	TO->FROM	G17_109	DAWSON CREEK - G17109_T(P) 230.00 230KV CKT 1	175.9	0.88032	223.336	CIRCLE - G12_012IST 115.00 115KV CKT 1
20WP	00NR	0	TO->FROM	G17_109	DAWSON CREEK - G17109_T(P) 230.00 230KV CKT 1	176	0.9217	222.9227	CULBERTSN E7115.00 - WILISTON 115KV CKT 1
17G	16NR	0	TO->FROM	G17_109	DAWSON CREEK - G17109_T(P) 230.00 230KV CKT 1	176	0.86204	222.7005	CIRCLE - G12_012IST 115.00 115KV CKT 1
17SP	16ALL	0	TO->FROM	G17_109	DAWSON CREEK - G17109_T(P) 230.00 230KV CKT 1	176	0.95234	222.3318	CULBERTSN E7115.00 - CULBERTSON 115KV CKT 1
17G	16ALL	0	TO->FROM	G17_109	DAWSON CREEK - G17109_T(P) 230.00 230KV CKT 1	175.9	0.95069	222.1399	CULBERTSN E7115.00 - CULBERTSON 115KV CKT 1
17SP	00NR	0	TO->FROM	G17_109	DAWSON CREEK - G17109_T(P) 230.00 230KV CKT 1	176	0.93638	221.8418	CULBERTSON - POPLAR 115KV CKT 1
17SP	16ALL	0	TO->FROM	G17_109	DAWSON CREEK - G17109_T(P) 230.00 230KV CKT 1	176	0.88174	221.7682	CIRCLE - DAWSON CREEK 115KV CKT 1
17G	16ALL	0	TO->FROM	G17_109	DAWSON CREEK - G17109_T(P) 230.00 230KV CKT 1	175.9	0.99599	220.0659	FT PECK 230/115KV TRANSFORMER CKT 1
16WP	16ALL	0	TO->FROM	G17_109	DAWSON CREEK - G17109_T(P) 230.00 230KV CKT 1	176	0.88079	219.8477	CIRCLE - G12_012IST 115.00 115KV CKT 1
17SP	00NR	0	TO->FROM	G17_109	DAWSON CREEK - G17109_T(P) 230.00 230KV CKT 1	176	0.86471	219.2086	CIRCLE - DAWSON CREEK 115KV CKT 1
17G	16NR	0	TO->FROM	G17_109	DAWSON CREEK - G17109_T(P) 230.00 230KV CKT 1	176	0.93209	219.0164	CULBERTSN E7115.00 - CULBERTSON 115KV CKT 1
25SP	16ALL	0	TO->FROM	G17_109	DAWSON CREEK - G17109_T(P) 230.00 230KV CKT 1	160	0.88158	219.0025	System Intact
16WP	16ALL	0	TO->FROM	G17_109	DAWSON CREEK - G17109_T(P) 230.00 230KV CKT 1	176	0.99652	218.3568	FT PECK 230/115KV TRANSFORMER CKT 1
25SP	16ALL	0	TO->FROM	G17_109	DAWSON CREEK - G17109_T(P) 230.00 230KV CKT 1	176	0.88186	218.2227	CIRCLE - G12_012IST 115.00 115KV CKT 1
16WP	00NR	0	TO->FROM	G17_109	DAWSON CREEK - G17109_T(P) 230.00 230KV CKT 1	176	0.93646	218.1064	POPLAR - WOLF POINT 115KV CKT 1
17G	16ALL	0	TO->FROM	G17_109	DAWSON CREEK - G17109_T(P) 230.00 230KV CKT 1	175.9	0.88032	217.6509	CIRCLE - DAWSON CREEK 115KV CKT 1
16WP	16ALL	0	TO->FROM	G17_109	DAWSON CREEK - G17109_T(P) 230.00 230KV CKT 1	176	0.95131	217.0977	CULBERTSN E7115.00 - CULBERTSON 115KV CKT 1
16WP	00NR	0	TO->FROM	G17_109	DAWSON CREEK - G17109_T(P) 230.00 230KV CKT 1	176	0.9355	216.9659	CULBERTSN E7115.00 - WILISTON 115KV CKT 1
17G	16NR	0	TO->FROM	G17_109	DAWSON CREEK - G17109_T(P) 230.00 230KV CKT 1	176	0.86204	216.905	CIRCLE - DAWSON CREEK 115KV CKT 1
20L	16NR	0	TO->FROM	G17_109	DAWSON CREEK - G17109_T(P) 230.00 230KV CKT 1	175.9	0.93512	216.1105	CULBERTSN E7115.00 - WILISTON 115KV CKT 1
20SP	16ALL	0	TO->FROM	G17_109	DAWSON CREEK - G17109_T(P) 230.00 230KV CKT 1	160	0.88141	215.085	System Intact
17SP	00NR	0	TO->FROM	G17_109	DAWSON CREEK - G17109_T(P) 230.00 230KV CKT 1	176	0.93638	215.0804	CULBERTSN E7115.00 - CULBERTSON 115KV CKT 1
17SP	16ALL	0	TO->FROM	G17_109	DAWSON CREEK - G17109_T(P) 230.00 230KV CKT 1	176	0.89604	214.3773	FT PECK - WOLF POINT 115KV CKT 2
17SP	16ALL	0	TO->FROM	G17_109	DAWSON CREEK - G17109_T(P) 230.00 230KV CKT 1	176	0.89514	214.0432	FT PECK - WOLF POINT 115KV CKT 1
20SP	16ALL	0	TO->FROM	G17_109	DAWSON CREEK - G17109_T(P) 230.00 230KV CKT 1	176	0.88166	213.6318	CIRCLE - G12_012IST 115.00 115KV CKT 1
16WP	00NR	0	TO->FROM	G17_109	DAWSON CREEK - G17109_T(P) 230.00 230KV CKT 1	176	0.93646	213.5041	CULBERTSON - POPLAR 115KV CKT 1
17SP	16ALL	0	TO->FROM	G17_109	DAWSON CREEK - G17109_T(P) 230.00 230KV CKT 1	176	0.88145	213.2068	G15098_1 230.00 230/34.5KV TRANSFORMER CKT 1
17SP	16ALL	0	TO->FROM	G17_109	DAWSON CREEK - G17109_T(P) 230.00 230KV CKT 1	176	0.88145	213.15	BEAVERHILL4 230.00 - G15098_1 230.00 230KV CKT 1
25SP	00NR	0	TO->FROM	G17_109	DAWSON CREEK - G17109_T(P) 230.00 230KV CKT 1	160	0.86667	212.834	System Intact
17SP	16ALL	0	TO->FROM	G17_109	DAWSON CREEK - G17109_T(P) 230.00 230KV CKT 1	176	0.88145	212.6386	DAGLUM 4230.00 - GI1414 4230.00 230KV CKT 1
16WP	16ALL	0	TO->FROM	G17_109	DAWSON CREEK - G17109_T(P) 230.00 230KV CKT 1	176	0.88079	212.6318	CIRCLE - DAWSON CREEK 115KV CKT 1
25SP	16ALL	0	TO->FROM	G17_109	DAWSON CREEK - G17109_T(P) 230.00 230KV CKT 1	176	0.95265	212.4023	POPLAR - WOLF POINT 115KV CKT 1
17SP	16ALL	0	TO->FROM	G17_109	DAWSON CREEK - G17109_T(P) 230.00 230KV CKT 1	176	0.88282	212.2636	TIMBERCREEK4230.00 - WILLISTON 230KV CKT 1
17SP	16ALL	0	TO->FROM	G17_109	DAWSON CREEK - G17109_T(P) 230.00 230KV CKT 1	176	0.88282	212.2068	TIMBERCREEK4230.00 - WATFORD 230KV CKT 1
20SP	00NR	0	TO->FROM	G17_109	DAWSON CREEK - G17109_T(P) 230.00 230KV CKT 1	160	0.86663	212.201	System Intact
17SP	16ALL	0	TO->FROM	G17_109	DAWSON CREEK - G17109_T(P) 230.00 230KV CKT 1	176	0.87902	212.1977	DAGLUM 4230.00 - RHAME 4 230.00 230KV CKT 1
20SP	16ALL	0	TO->FROM	G17_109	DAWSON CREEK - G17109_T(P) 230.00 230KV CKT 1	176	0.95247	212.0205	POPLAR - WOLF POINT 115KV CKT 1
25SP	00NR	0	TO->FROM	G17_109	DAWSON CREEK - G17109_T(P) 230.00 230KV CKT 1	176	0.86488	211.9668	CIRCLE - G12_012IST 115.00 115KV CKT 1
16WP	00NR	0	TO->FROM	G17_109	DAWSON CREEK - G17109_T(P) 230.00 230KV CKT 1	160	0.86648	211.421	System Intact

SEASON	GROUP	SCENARIO	DIRECTION	SOURCE	MONITORED ELEMENT	RATE (MVA)	TDF	CONTINGENCY LOADING %	CONTINGENCY
20SP	00NR	0	TO->FROM	G17_109	DAWSON CREEK - G17109_T(P) 230.00 230KV CKT 1	176	0.86483	211.1623	CIRCLE - G12_012IST 115.00 115KV CKT 1
17SP	00NR	0	TO->FROM	G17_109	DAWSON CREEK - G17109_T(P) 230.00 230KV CKT 1	176	0.88041	210.6996	FT PECK - WOLF POINT 115KV CKT 2
20SP	16ALL	0	TO->FROM	G17_109	DAWSON CREEK - G17109_T(P) 230.00 230KV CKT 1	176	0.99751	210.5704	FT PECK 230/115KV TRANSFORMER CKT 1
17G	16ALL	0	TO->FROM	G17_109	DAWSON CREEK - G17109_T(P) 230.00 230KV CKT 1	175.9	0.89465	210.5446	FT PECK - WOLF POINT 115KV CKT 2
17SP	00NR	0	TO->FROM	G17_109	DAWSON CREEK - G17109_T(P) 230.00 230KV CKT 1	176	0.87954	210.4277	FT PECK - WOLF POINT 115KV CKT 1
17G	16ALL	0	TO->FROM	G17_109	DAWSON CREEK - G17109_T(P) 230.00 230KV CKT 1	175.9	0.89375	210.2672	FT PECK - WOLF POINT 115KV CKT 1
17G	16NR	0	TO->FROM	G17_109	DAWSON CREEK - G17109_T(P) 230.00 230KV CKT 1	176	0.87744	209.3073	FT PECK - WOLF POINT 115KV CKT 2
17G	16ALL	0	TO->FROM	G17_109	DAWSON CREEK - G17109_T(P) 230.00 230KV CKT 1	175.9	0.88015	209.2234	BEAVERHILL4 230.00 - G15098_1 230.00 230KV CKT 1
17G	16ALL	0	TO->FROM	G17_109	DAWSON CREEK - G17109_T(P) 230.00 230KV CKT 1	175.9	0.88015	209.2234	G15098_1 230.00 230/34.5KV TRANSFORMER CKT 1
17G	16NR	0	TO->FROM	G17_109	DAWSON CREEK - G17109_T(P) 230.00 230KV CKT 1	176	0.87659	209.0959	FT PECK - WOLF POINT 115KV CKT 1
17SP	00NR	0	TO->FROM	G17_109	DAWSON CREEK - G17109_T(P) 230.00 230KV CKT 1	176	0.86377	208.9809	DAGLUM 4230.00 - RHAME 4 230.00 230KV CKT 1
17SP	16ALL	0	TO->FROM	G17_109	DAWSON CREEK - G17109_T(P) 230.00 230KV CKT 1	176	0.88274	208.8955	JUDSON 3345.00 (JUDSON KU1A) 345/230/13.8KV TRANSFORMER CKT 1
17SP	16ALL	0	TO->FROM	G17_109	DAWSON CREEK - G17109_T(P) 230.00 230KV CKT 1	176	0.88274	208.8955	JUDSON 4230.00 - WILLISTON 230KV CKT 1
16WP	00NR	0	TO->FROM	G17_109	DAWSON CREEK - G17109_T(P) 230.00 230KV CKT 1	176	0.98407	208.865	FT PECK 230/115KV TRANSFORMER CKT 1
20WP	16ALL	0	TO->FROM	G17_109	DAWSON CREEK - G17109_T(P) 230.00 230KV CKT 1	160	0.88054	208.7425	System Intact
17G	16ALL	0	TO->FROM	G17_109	DAWSON CREEK - G17109_T(P) 230.00 230KV CKT 1	175.9	0.88015	208.6549	DAGLUM 4230.00 - GI1414 4230.00 230KV CKT 1
17SP	16ALL	0	TO->FROM	G17_109	DAWSON CREEK - G17109_T(P) 230.00 230KV CKT 1	176	0.87711	208.5	BOWMAN - RHAME 4 230.00 230KV CKT 1
17SP	16ALL	0	TO->FROM	G17_109	DAWSON CREEK - G17109_T(P) 230.00 230KV CKT 1	176	0.86519	208.3795	BAKER - LTLMISS 230KV CKT 1
20WP	16ALL	0	TO->FROM	G17_109	DAWSON CREEK - G17109_T(P) 230.00 230KV CKT 1	176	0.88068	208.125	CIRCLE - G12_012IST 115.00 115KV CKT 1
17G	16NR	0	TO->FROM	G17_109	DAWSON CREEK - G17109_T(P) 230.00 230KV CKT 1	176	0.86379	207.9618	BEAVERHILL4 230.00 - G15098_1 230.00 230KV CKT 1
17G	16NR	0	TO->FROM	G17_109	DAWSON CREEK - G17109_T(P) 230.00 230KV CKT 1	176	0.86379	207.9618	G15098_1 230.00 230/34.5KV TRANSFORMER CKT 1
16WP	16ALL	0	TO->FROM	G17_109	DAWSON CREEK - G17109_T(P) 230.00 230KV CKT 1	176	0.89513	207.8636	FT PECK - WOLF POINT 115KV CKT 2
17G	16ALL	0	TO->FROM	G17_109	DAWSON CREEK - G17109_T(P) 230.00 230KV CKT 1	175.9	0.87771	207.8136	DAGLUM 4230.00 - RHAME 4 230.00 230KV CKT 1
25SP	16ALL	0	TO->FROM	G17_109	DAWSON CREEK - G17109_T(P) 230.00 230KV CKT 1	176	0.95265	207.7432	CULBERTSON - POPLAR 115KV CKT 1
17G	16NR	0	TO->FROM	G17_109	DAWSON CREEK - G17109_T(P) 230.00 230KV CKT 1	176	0.86379	207.7345	DAGLUM 4230.00 - GI1414 4230.00 230KV CKT 1
20SP	16ALL	0	TO->FROM	G17_109	DAWSON CREEK - G17109_T(P) 230.00 230KV CKT 1	176	0.95247	207.5886	CULBERTSON - POPLAR 115KV CKT 1
16WP	16ALL	0	TO->FROM	G17_109	DAWSON CREEK - G17109_T(P) 230.00 230KV CKT 1	176	0.89422	207.5864	FT PECK - WOLF POINT 115KV CKT 1
20WP	16ALL	0	TO->FROM	G17_109	DAWSON CREEK - G17109_T(P) 230.00 230KV CKT 1	176	0.95153	207.3727	POPLAR - WOLF POINT 115KV CKT 1
25SP	16ALL	0	TO->FROM	G17_109	DAWSON CREEK - G17109_T(P) 230.00 230KV CKT 1	176	0.88158	207.2182	COALHILL4 230.00 230/6.9KV TRANSFORMER CKT 1
17G	16NR	0	TO->FROM	G17_109	DAWSON CREEK - G17109_T(P) 230.00 230KV CKT 1	176	0.86114	207.0255	DAGLUM 4230.00 - RHAME 4 230.00 230KV CKT 1
20WP	16ALL	0	TO->FROM	G17_109	DAWSON CREEK - G17109_T(P) 230.00 230KV CKT 1	176	0.99671	206.9227	FT PECK 230/115KV TRANSFORMER CKT 1
17SP	16ALL	0	TO->FROM	G17_109	DAWSON CREEK - G17109_T(P) 230.00 230KV CKT 1	176	0.8605	206.8932	BELFIELD - CHARLIE CREEK 345KV CKT 1
17SP	00NR	0	TO->FROM	G17_109	DAWSON CREEK - G17109_T(P) 230.00 230KV CKT 1	176	0.8438	206.8841	BELFIELD - CHARLIE CREEK 345KV CKT 1
17SP	00NR	0	TO->FROM	G17_109	DAWSON CREEK - G17109_T(P) 230.00 230KV CKT 1	176	0.85082	206.7968	LTLMISS - RHAME 4 230.00 230KV CKT 1
16WP	16ALL	0	TO->FROM	G17_109	DAWSON CREEK - G17109_T(P) 230.00 230KV CKT 1	176	0.88058	206.4773	BEAVERHILL4 230.00 - G15098_1 230.00 230KV CKT 1
16WP	16ALL	0	TO->FROM	G17_109	DAWSON CREEK - G17109_T(P) 230.00 230KV CKT 1	176	0.88058	206.4773	G15098_1 230.00 230/34.5KV TRANSFORMER CKT 1
25SP	16ALL	0	TO->FROM	G17_109	DAWSON CREEK - G17109_T(P) 230.00 230KV CKT 1	176	0.88186	206.4046	CIRCLE - DAWSON CREEK 115KV CKT 1
16WP	00NR	0	TO->FROM	G17_109	DAWSON CREEK - G17109_T(P) 230.00 230KV CKT 1	176	0.86479	206.2687	CIRCLE - G12_012IST 115.00 115KV CKT 1
16WP	16ALL	0	TO->FROM	G17_109	DAWSON CREEK - G17109_T(P) 230.00 230KV CKT 1	176	0.88058	205.9659	DAGLUM 4230.00 - GI1414 4230.00 230KV CKT 1
16WP	00NR	0	TO->FROM	G17_109	DAWSON CREEK - G17109_T(P) 230.00 230KV CKT 1	176	0.93646	205.8336	CULBERTSN E7115.00 - CULBERTSON 115KV CKT 1
20SP	00NR	0	TO->FROM	G17_109	DAWSON CREEK - G17109_T(P) 230.00 230KV CKT 1	176	0.93725	205.8068	POPLAR - WOLF POINT 115KV CKT 1
25SP	00NR	0	TO->FROM	G17_109	DAWSON CREEK - G17109_T(P) 230.00 230KV CKT 1	176	0.93729	205.53	POPLAR - WOLF POINT 115KV CKT 1
17SP	00NR	0	TO->FROM	G17_109	DAWSON CREEK - G17109_T(P) 230.00 230KV CKT 1	176	0.86711	205.3837	CHAR.CK4 230.00 - WATFORD 230KV CKT 1
17SP	00NR	0	TO->FROM	G17_109	DAWSON CREEK - G17109_T(P) 230.00 230KV CKT 1	176	0.86301	205.3768	BISON - MAURINE 230KV CKT 1
17SP	00NR	0	TO->FROM	G17_109	DAWSON CREEK - G17109_T(P) 230.00 230KV CKT 1	176	0.86301	205.2632	BISON - HETINGER 230KV CKT 1
17SP	00NR	0	TO->FROM	G17_109	DAWSON CREEK - G17109_T(P) 230.00 230KV CKT 1	176	0.85507	205.24	DAWSON CREEK - LEWIS & CLARK 115KV CKT 1
16WP	16ALL	0	TO->FROM	G17_109	DAWSON CREEK - G17109_T(P) 230.00 230KV CKT 1	176	0.87815	205.1818	DAGLUM 4230.00 - RHAME 4 230.00 230KV CKT 1
20SP	00NR	0	TO->FROM	G17_109	DAWSON CREEK - G17109_T(P) 230.00 230KV CKT 1	176	0.98476	204.9564	FT PECK 230/115KV TRANSFORMER CKT 1
25SP	16ALL	0	TO->FROM	G17_109	DAWSON CREEK - G17109_T(P) 230.00 230KV CKT 1	176	0.88158	204.9454	FT PECK - KPS10-FP7 115.00 115KV CKT 1
25SP	16ALL	0	TO->FROM	G17_109	DAWSON CREEK - G17109_T(P) 230.00 230KV CKT 1	176	0.88158	204.9454	KPS10-FP7 115.00 115/6.9KV TRANSFORMER CKT 1
20L	16ALL	0	TO->FROM	G17_109	DAWSON CREEK - G17109_T(P) 230.00 230KV CKT 1	175.8	0.99	204.7782	FT PECK 230/115KV TRANSFORMER CKT 1
17G	16ALL	0	TO->FROM	G17_109	DAWSON CREEK - G17109_T(P) 230.00 230KV CKT 1	175.9	0.88146	204.5162	JUDSON 3345.00 (JUDSON KU1A) 345/230/13.8KV TRANSFORMER CKT 1
17G	16ALL	0	TO->FROM	G17_109	DAWSON CREEK - G17109_T(P) 230.00 230KV CKT 1	175.9	0.88146	204.5162	JUDSON 4230.00 - WILLISTON 230KV CKT 1

SEASON	GROUP	SCENARIO	DIRECTION	SOURCE	MONITORED ELEMENT	RATE (MVA)	TDF	CONTINGENCY LOADING %	CONTINGENCY
17SP	16ALL	0	TO->FROM	G17_109	DAWSON CREEK - G17109_T(P) 230.00 230KV CKT 1	176	0.82639	204.4568	BEAVERHILL4 230.00 - DAWSON CREEK 230KV CKT 1
17SP	00NR	0	TO->FROM	G17_109	DAWSON CREEK - G17109_T(P) 230.00 230KV CKT 1	176	0.85507	204.4445	LEWIS & CLARK - RICHLAND 115KV CKT 1
17G	16ALL	0	TO->FROM	G17_109	DAWSON CREEK - G17109_T(P) 230.00 230KV CKT 1	175.9	0.86393	204.3457	BAKER - LTLMISS 230KV CKT 1
20L	16ALL	0	TO->FROM	G17_109	DAWSON CREEK - G17109_T(P) 230.00 230KV CKT 1	159.8	0.87661	204.3279	System Intact
17G	16ALL	0	TO->FROM	G17_109	DAWSON CREEK - G17109_T(P) 230.00 230KV CKT 1	175.9	0.87623	203.8522	BISON - MAURINE 230KV CKT 1
17G	16NR	0	TO->FROM	G17_109	DAWSON CREEK - G17109_T(P) 230.00 230KV CKT 1	176	0.86379	203.7573	G15046_1 345.00 - TANDE 3345.00 345KV CKT 1
20SP	16ALL	0	TO->FROM	G17_109	DAWSON CREEK - G17109_T(P) 230.00 230KV CKT 1	176	0.88141	203.7136	COALHILL4 230.00 230/6.9KV TRANSFORMER CKT 1
17G	16ALL	0	TO->FROM	G17_109	DAWSON CREEK - G17109_T(P) 230.00 230KV CKT 1	175.9	0.87623	203.6816	BISON - HETINGER 230KV CKT 1
17G	16NR	0	TO->FROM	G17_109	DAWSON CREEK - G17109_T(P) 230.00 230KV CKT 1	176	0.84821	203.595	BAKER - LTLMISS 230KV CKT 1
17G	16ALL	0	TO->FROM	G17_109	DAWSON CREEK - G17109_T(P) 230.00 230KV CKT 1	175.9	0.86893	203.4906	LEWIS & CLARK - RICHLAND 115KV CKT 1
17G	16NR	0	TO->FROM	G17_109	DAWSON CREEK - G17109_T(P) 230.00 230KV CKT 1	176	0.86114	203.3891	BELFIELD - DAGLUM 4230.00 230KV CKT 1
20L	16NR	0	TO->FROM	G17_109	DAWSON CREEK - G17109_T(P) 230.00 230KV CKT 1	159.9	0.86657	203.3786	System Intact
17G	16NR	0	TO->FROM	G17_109	DAWSON CREEK - G17109_T(P) 230.00 230KV CKT 1	176	0.85262	203.3741	LEWIS & CLARK - RICHLAND 115KV CKT 1
17G	16NR	0	TO->FROM	G17_109	DAWSON CREEK - G17109_T(P) 230.00 230KV CKT 1	176	0.86041	203.1995	BISON - MAURINE 230KV CKT 1
20WP	16ALL	0	TO->FROM	G17_109	DAWSON CREEK - G17109_T(P) 230.00 230KV CKT 1	176	0.95153	202.9409	CULBERTSON - POPLAR 115KV CKT 1
20WP	00NR	0	TO->FROM	G17_109	DAWSON CREEK - G17109_T(P) 230.00 230KV CKT 1	160	0.86325	202.775	System Intact
16WP	16ALL	0	TO->FROM	G17_109	DAWSON CREEK - G17109_T(P) 230.00 230KV CKT 1	176	0.86435	202.7364	LTLMISS - RHAME 4 230.00 230KV CKT 1
20WP	00NR	0	TO->FROM	G17_109	DAWSON CREEK - G17109_T(P) 230.00 230KV CKT 1	176	0.8602	202.3659	CIRCLE - G12_012IST 115.00 115KV CKT 1
17G	16NR	0	TO->FROM	G17_109	DAWSON CREEK - G17109_T(P) 230.00 230KV CKT 1	176	0.85262	202.3514	DAWSON CREEK - LEWIS & CLARK 115KV CKT 1
20SP	16ALL	0	TO->FROM	G17_109	DAWSON CREEK - G17109_T(P) 230.00 230KV CKT 1	176	0.88166	202.0977	CIRCLE - DAWSON CREEK 115KV CKT 1
20L	16ALL	0	TO->FROM	G17_109	DAWSON CREEK - G17109_T(P) 230.00 230KV CKT 1	175.8	0.87661	202.0318	CIRCLE - G12_012IST 115.00 115KV CKT 1
16WP	16ALL	0	TO->FROM	G17_109	DAWSON CREEK - G17109_T(P) 230.00 230KV CKT 1	176	0.87494	201.9273	FAIRVIEW - RICHLAND 115KV CKT 1
16WP	16ALL	0	TO->FROM	G17_109	DAWSON CREEK - G17109_T(P) 230.00 230KV CKT 1	176	0.88188	201.825	JUDSON 3345.00 (JUDSON KU1A) 345/230/13.8KV TRANSFORMER CKT 1
16WP	16ALL	0	TO->FROM	G17_109	DAWSON CREEK - G17109_T(P) 230.00 230KV CKT 1	176	0.88188	201.825	JUDSON 4230.00 - WILLISTON 230KV CKT 1
25SP	16ALL	0	TO->FROM	G17_109	DAWSON CREEK - G17109_T(P) 230.00 230KV CKT 1	176	0.88158	201.7636	BEAVERHILL4 230.00 - G15098_1 230.00 230KV CKT 1
25SP	16ALL	0	TO->FROM	G17_109	DAWSON CREEK - G17109_T(P) 230.00 230KV CKT 1	176	0.88158	201.7636	G15098_1 230.00 230/34.5KV TRANSFORMER CKT 1
17G	16NR	0	TO->FROM	G17_109	DAWSON CREEK - G17109_T(P) 230.00 230KV CKT 1	176	0.84128	201.71	BELFIELD - CHARLIE CREEK 345KV CKT 1
25SP	00NR	0	TO->FROM	G17_109	DAWSON CREEK - G17109_T(P) 230.00 230KV CKT 1	176	0.86667	201.6673	COALHILL4 230.00 230/6.9KV TRANSFORMER CKT 1
25SP	16ALL	0	TO->FROM	G17_109	DAWSON CREEK - G17109_T(P) 230.00 230KV CKT 1	176	0.89621	201.6364	FT PECK - WOLF POINT 115KV CKT 2
16WP	16ALL	0	TO->FROM	G17_109	DAWSON CREEK - G17109_T(P) 230.00 230KV CKT 1	176	0.87665	201.5591	BISON - MAURINE 230KV CKT 1
20L	16NR	0	TO->FROM	G17_109	DAWSON CREEK - G17109_T(P) 230.00 230KV CKT 1	175.9	0.86557	201.4681	CIRCLE - G12_012IST 115.00 115KV CKT 1
20L	16NR	0	TO->FROM	G17_109	DAWSON CREEK - G17109_T(P) 230.00 230KV CKT 1	175.9	0.97761	201.4413	FT PECK 230/115KV TRANSFORMER CKT 1
20SP	16ALL	0	TO->FROM	G17_109	DAWSON CREEK - G17109_T(P) 230.00 230KV CKT 1	176	0.88141	201.4409	FT PECK - KPS10-FP7 115.00 115KV CKT 1
16WP	16ALL	0	TO->FROM	G17_109	DAWSON CREEK - G17109_T(P) 230.00 230KV CKT 1	176	0.87665	201.3886	BISON - HETINGER 230KV CKT 1
20SP	16ALL	0	TO->FROM	G17_109	DAWSON CREEK - G17109_T(P) 230.00 230KV CKT 1	176	0.88141	201.3841	KPS10-FP7 115.00 115/6.9KV TRANSFORMER CKT 1
20SP	00NR	0	TO->FROM	G17_109	DAWSON CREEK - G17109_T(P) 230.00 230KV CKT 1	176	0.93725	201.3182	CULBERTSON - POPLAR 115KV CKT 1
25SP	16ALL	0	TO->FROM	G17_109	DAWSON CREEK - G17109_T(P) 230.00 230KV CKT 1	176	0.8953	201.3	FT PECK - WOLF POINT 115KV CKT 1
25SP	16ALL	0	TO->FROM	G17_109	DAWSON CREEK - G17109_T(P) 230.00 230KV CKT 1	176	0.87913	201.2636	DAGLUM 4230.00 - RHAME 4 230.00 230KV CKT 1
25SP	16ALL	0	TO->FROM	G17_109	DAWSON CREEK - G17109_T(P) 230.00 230KV CKT 1	176	0.88158	201.2523	DAGLUM 4230.00 - GI1414 4230.00 230KV CKT 1
17G	16ALL	0	TO->FROM	G17_109	DAWSON CREEK - G17109_T(P) 230.00 230KV CKT 1	175.9	0.82515	201.2212	BEAVERHILL4 230.00 - DAWSON CREEK 230KV CKT 1
20SP	00NR	0	TO->FROM	G17_109	DAWSON CREEK - G17109_T(P) 230.00 230KV CKT 1	176	0.86663	201.0918	COALHILL4 230.00 230/6.9KV TRANSFORMER CKT 1
25SP	16ALL	0	TO->FROM	G17_109	DAWSON CREEK - G17109_T(P) 230.00 230KV CKT 1	176	0.8828	200.9614	JUDSON 3345.00 - PATENTGATE 3345.00 345KV CKT 1
25SP	00NR	0	TO->FROM	G17_109	DAWSON CREEK - G17109_T(P) 230.00 230KV CKT 1	176	0.93729	200.8709	CULBERTSON - POPLAR 115KV CKT 1
25SP	16ALL	0	TO->FROM	G17_109	DAWSON CREEK - G17109_T(P) 230.00 230KV CKT 1	176	0.88158	200.7977	CIRCLE - KPS12-CR7 115.00 115KV CKT 1
25SP	16ALL	0	TO->FROM	G17_109	DAWSON CREEK - G17109_T(P) 230.00 230KV CKT 1	176	0.88158	200.7977	KPS12-CR7 115.00 115/6.9KV TRANSFORMER CKT 1
25SP	00NR	0	TO->FROM	G17_109	DAWSON CREEK - G17109_T(P) 230.00 230KV CKT 1	176	0.86488	200.1486	CIRCLE - DAWSON CREEK 115KV CKT 1
17SP	00NR	0	TO->FROM	G17_109	DAWSON CREEK - G17109_T(P) 230.00 230KV CKT 1	176	0.81236	200.145	BELFIELD - MEDORA 230KV CKT 1
17SP	00NR	0	TO->FROM	G17_109	DAWSON CREEK - G17109_T(P) 230.00 230KV CKT 1	176	0.82492	199.7582	DAWSON CREEK (DC KU5A) 230/115/13.2KV TRANSFORMER CKT 1
17G	16NR	0	TO->FROM	G17_109	DAWSON CREEK - G17109_T(P) 230.00 230KV CKT 1	176	0.80978	199.7327	BEAVERHILL4 230.00 - DAWSON CREEK 230KV CKT 1
17SP	00NR	0	TO->FROM	G17_109	DAWSON CREEK - G17109_T(P) 230.00 230KV CKT 1	176	0.81236	199.6336	BEAVERHILL4 230.00 - DAWSON CREEK 230KV CKT 1
20SP	00NR	0	TO->FROM	G17_109	DAWSON CREEK - G17109_T(P) 230.00 230KV CKT 1	176	0.86483	199.5145	CIRCLE - DAWSON CREEK 115KV CKT 1
20L	16ALL	0	TO->FROM	G17_109	DAWSON CREEK - G17109_T(P) 230.00 230KV CKT 1	175.8	0.94696	199.4016	POPLAR - WOLF POINT 115KV CKT 1
25SP	00NR	0	TO->FROM	G17_109	DAWSON CREEK - G17109_T(P) 230.00 230KV CKT 1	176	0.86667	199.3946	FT PECK - KPS10-FP7 115.00 115KV CKT 1

SEASON	GROUP	SCENARIO	DIRECTION	SOURCE	MONITORED ELEMENT	RATE (MVA)	TDF	CONTINGENCY LOADING %	CONTINGENCY
25SP	00NR	0	TO->FROM	G17_109	DAWSON CREEK - G17109_T(P) 230.00 230KV CKT 1	176	0.86667	199.3946	KPS10-FP7 115.00 115/6.9KV TRANSFORMER CKT 1
16WP	00NR	0	TO->FROM	G17_109	DAWSON CREEK - G17109_T(P) 230.00 230KV CKT 1	176	0.86479	199.28	CIRCLE - DAWSON CREEK 115KV CKT 1
17SP	00NR	0	TO->FROM	G17_109	DAWSON CREEK - G17109_T(P) 230.00 230KV CKT 1	176	0.81236	199.1791	BEAVERHILL4 230.00 - MEDORA 230KV CKT 1
20WP	00NR	0	TO->FROM	G17_109	DAWSON CREEK - G17109_T(P) 230.00 230KV CKT 1	176	0.98478	199.1077	FT PECK 230/115KV TRANSFORMER CKT 1
20SP	00NR	0	TO->FROM	G17_109	DAWSON CREEK - G17109_T(P) 230.00 230KV CKT 1	176	0.86663	198.8191	FT PECK - KPS10-FP7 115.00 115KV CKT 1
20SP	00NR	0	TO->FROM	G17_109	DAWSON CREEK - G17109_T(P) 230.00 230KV CKT 1	176	0.86663	198.7623	KPS10-FP7 115.00 115/6.9KV TRANSFORMER CKT 1
20WP	00NR	0	TO->FROM	G17_109	DAWSON CREEK - G17109_T(P) 230.00 230KV CKT 1	176	0.93724	198.5323	POPLAR - WOLF POINT 115KV CKT 1
20SP	16ALL	0	TO->FROM	G17_109	DAWSON CREEK - G17109_T(P) 230.00 230KV CKT 1	176	0.89603	198.4705	FT PECK - WOLF POINT 115KV CKT 2
20SP	16ALL	0	TO->FROM	G17_109	DAWSON CREEK - G17109_T(P) 230.00 230KV CKT 1	176	0.88141	198.2023	BEAVERHILL4 230.00 - G15098_1 230.00 230KV CKT 1
20SP	16ALL	0	TO->FROM	G17_109	DAWSON CREEK - G17109_T(P) 230.00 230KV CKT 1	176	0.88141	198.2023	G15098_1 230.00 230/34.5KV TRANSFORMER CKT 1
25SP	16ALL	0	TO->FROM	G17_109	DAWSON CREEK - G17109_T(P) 230.00 230KV CKT 1	176	0.86077	198.2023	BELFIELD - CHARLIE CREEK 345KV CKT 1
20SP	16ALL	0	TO->FROM	G17_109	DAWSON CREEK - G17109_T(P) 230.00 230KV CKT 1	176	0.89512	198.1341	FT PECK - WOLF POINT 115KV CKT 1
16WP	16ALL	0	TO->FROM	G17_109	DAWSON CREEK - G17109_T(P) 230.00 230KV CKT 1	176	0.82558	198.0795	BEAVERHILL4 230.00 - DAWSON CREEK 230KV CKT 1
20WP	16ALL	0	TO->FROM	G17_109	DAWSON CREEK - G17109_T(P) 230.00 230KV CKT 1	176	0.88054	198.0614	COALHILL4 230.00 230/6.9KV TRANSFORMER CKT 1
25SP	16ALL	0	TO->FROM	G17_109	DAWSON CREEK - G17109_T(P) 230.00 230KV CKT 1	176	0.86535	198.0204	LTLMISS - RHAME 4 230.00 230KV CKT 1
20SP	16ALL	0	TO->FROM	G17_109	DAWSON CREEK - G17109_T(P) 230.00 230KV CKT 1	176	0.88141	197.6909	DAGLUM 4230.00 - GI1414 4230.00 230KV CKT 1
20SP	16ALL	0	TO->FROM	G17_109	DAWSON CREEK - G17109_T(P) 230.00 230KV CKT 1	176	0.87895	197.5273	DAGLUM 4230.00 - RHAME 4 230.00 230KV CKT 1
20SP	16ALL	0	TO->FROM	G17_109	DAWSON CREEK - G17109_T(P) 230.00 230KV CKT 1	176	0.88141	197.2364	CIRCLE - KPS12-CR7 115.00 115KV CKT 1
20SP	16ALL	0	TO->FROM	G17_109	DAWSON CREEK - G17109_T(P) 230.00 230KV CKT 1	176	0.88141	197.2364	KPS12-CR7 115.00 115/6.9KV TRANSFORMER CKT 1
20L	16ALL	0	TO->FROM	G17_109	DAWSON CREEK - G17109_T(P) 230.00 230KV CKT 1	175.8	0.94696	196.785	CULBERTSON - POPLAR 115KV CKT 1
20L	16NR	0	TO->FROM	G17_109	DAWSON CREEK - G17109_T(P) 230.00 230KV CKT 1	175.9	0.93646	196.7409	POPLAR - WOLF POINT 115KV CKT 1
16WP	00NR	0	TO->FROM	G17_109	DAWSON CREEK - G17109_T(P) 230.00 230KV CKT 1	176	0.88048	195.9396	FT PECK - WOLF POINT 115KV CKT 2
20WP	16ALL	0	TO->FROM	G17_109	DAWSON CREEK - G17109_T(P) 230.00 230KV CKT 1	176	0.88054	195.7318	FT PECK - KPS10-FP7 115.00 115KV CKT 1
20WP	16ALL	0	TO->FROM	G17_109	DAWSON CREEK - G17109_T(P) 230.00 230KV CKT 1	176	0.88054	195.7318	KPS10-FP7 115.00 115/6.9KV TRANSFORMER CKT 1
16WP	00NR	0	TO->FROM	G17_109	DAWSON CREEK - G17109_T(P) 230.00 230KV CKT 1	176	0.87961	195.6677	FT PECK - WOLF POINT 115KV CKT 1
25SP	00NR	0	TO->FROM	G17_109	DAWSON CREEK - G17109_T(P) 230.00 230KV CKT 1	176	0.88078	195.6532	FT PECK - WOLF POINT 115KV CKT 2
25SP	16ALL	0	TO->FROM	G17_109	DAWSON CREEK - G17109_T(P) 230.00 230KV CKT 1	176	0.82649	195.3363	BEAVERHILL4 230.00 - DAWSON CREEK 230KV CKT 1
25SP	00NR	0	TO->FROM	G17_109	DAWSON CREEK - G17109_T(P) 230.00 230KV CKT 1	176	0.87991	195.3246	FT PECK - WOLF POINT 115KV CKT 1
25SP	00NR	0	TO->FROM	G17_109	DAWSON CREEK - G17109_T(P) 230.00 230KV CKT 1	176	0.86667	195.2468	CIRCLE - KPS12-CR7 115.00 115KV CKT 1
25SP	00NR	0	TO->FROM	G17_109	DAWSON CREEK - G17109_T(P) 230.00 230KV CKT 1	176	0.86667	195.2468	KPS12-CR7 115.00 115/6.9KV TRANSFORMER CKT 1
25SP	00NR	0	TO->FROM	G17_109	DAWSON CREEK - G17109_T(P) 230.00 230KV CKT 1	176	0.86402	195.2195	DAGLUM 4230.00 - RHAME 4 230.00 230KV CKT 1
20SP	00NR	0	TO->FROM	G17_109	DAWSON CREEK - G17109_T(P) 230.00 230KV CKT 1	176	0.88074	195.1346	FT PECK - WOLF POINT 115KV CKT 2
20SP	00NR	0	TO->FROM	G17_109	DAWSON CREEK - G17109_T(P) 230.00 230KV CKT 1	176	0.87986	194.8609	FT PECK - WOLF POINT 115KV CKT 1
20SP	00NR	0	TO->FROM	G17_109	DAWSON CREEK - G17109_T(P) 230.00 230KV CKT 1	176	0.86663	194.6714	CIRCLE - KPS12-CR7 115.00 115KV CKT 1
20SP	00NR	0	TO->FROM	G17_109	DAWSON CREEK - G17109_T(P) 230.00 230KV CKT 1	176	0.86663	194.6145	KPS12-CR7 115.00 115/6.9KV TRANSFORMER CKT 1
25SP	00NR	0	TO->FROM	G17_109	DAWSON CREEK - G17109_T(P) 230.00 230KV CKT 1	176	0.84412	194.6127	BELFIELD - CHARLIE CREEK 345KV CKT 1
20SP	00NR	0	TO->FROM	G17_109	DAWSON CREEK - G17109_T(P) 230.00 230KV CKT 1	176	0.86396	194.5268	DAGLUM 4230.00 - RHAME 4 230.00 230KV CKT 1
20SP	16ALL	0	TO->FROM	G17_109	DAWSON CREEK - G17109_T(P) 230.00 230KV CKT 1	176	0.86518	194.4046	LTLMISS - RHAME 4 230.00 230KV CKT 1
20L	16NR	0	TO->FROM	G17_109	DAWSON CREEK - G17109_T(P) 230.00 230KV CKT 1	175.9	0.93646	194.1258	CULBERTSON - POPLAR 115KV CKT 1
20WP	00NR	0	TO->FROM	G17_109	DAWSON CREEK - G17109_T(P) 230.00 230KV CKT 1	176	0.93724	194.1005	CULBERTSON - POPLAR 115KV CKT 1
20SP	16ALL	0	TO->FROM	G17_109	DAWSON CREEK - G17109_T(P) 230.00 230KV CKT 1	176	0.86055	193.8363	BELFIELD - CHARLIE CREEK 345KV CKT 1
20SP	00NR	0	TO->FROM	G17_109	DAWSON CREEK - G17109_T(P) 230.00 230KV CKT 1	176	0.84405	193.7477	BELFIELD - CHARLIE CREEK 345KV CKT 1
20L	16ALL	0	TO->FROM	G17_109	DAWSON CREEK - G17109_T(P) 230.00 230KV CKT 1	175.8	0.87661	193.727	CIRCLE - DAWSON CREEK 115KV CKT 1
20WP	16ALL	0	TO->FROM	G17_109	DAWSON CREEK - G17109_T(P) 230.00 230KV CKT 1	176	0.88068	193.5796	CIRCLE - DAWSON CREEK 115KV CKT 1
25SP	00NR	0	TO->FROM	G17_109	DAWSON CREEK - G17109_T(P) 230.00 230KV CKT 1	176	0.8511	193.4386	LTLMISS - RHAME 4 230.00 230KV CKT 1
20L	16NR	0	TO->FROM	G17_109	DAWSON CREEK - G17109_T(P) 230.00 230KV CKT 1	175.9	0.86557	193.0542	CIRCLE - DAWSON CREEK 115KV CKT 1
25SP	00NR	0	TO->FROM	G17_109	DAWSON CREEK - G17109_T(P) 230.00 230KV CKT 1	176	0.8511	192.9273	BAKER - LTLMISS 230KV CKT 1
20L	16ALL	0	TO->FROM	G17_109	DAWSON CREEK - G17109_T(P) 230.00 230KV CKT 1	175.8	0.94696	192.8601	CULBERTSN E7115.00 - CULBERTSON 115KV CKT 1
20WP	16ALL	0	TO->FROM	G17_109	DAWSON CREEK - G17109_T(P) 230.00 230KV CKT 1	176	0.89513	192.6954	FT PECK - WOLF POINT 115KV CKT 2
20WP	00NR	0	TO->FROM	G17_109	DAWSON CREEK - G17109_T(P) 230.00 230KV CKT 1	176	0.86325	192.6364	COALHILL4 230.00 230/6.9KV TRANSFORMER CKT 1
20SP	00NR	0	TO->FROM	G17_109	DAWSON CREEK - G17109_T(P) 230.00 230KV CKT 1	176	0.85106	192.4655	LTLMISS - RHAME 4 230.00 230KV CKT 1
20WP	16ALL	0	TO->FROM	G17_109	DAWSON CREEK - G17109_T(P) 230.00 230KV CKT 1	176	0.88054	192.4364	BEAVERHILL4 230.00 - G15098_1 230.00 230KV CKT 1
20WP	16ALL	0	TO->FROM	G17_109	DAWSON CREEK - G17109_T(P) 230.00 230KV CKT 1	176	0.88054	192.4364	G15098_1 230.00 230/34.5KV TRANSFORMER CKT 1

SEASON	GROUP	SCENARIO	DIRECTION	SOURCE	MONITORED ELEMENT	RATE (MVA)	TDF	CONTINGENCY LOADING %	CONTINGENCY
20WP	16ALL	0	TO->FROM	G17_109	DAWSON CREEK - G17109_T(P) 230.00 230KV CKT 1	176	0.89422	192.4182	FT PECK - WOLF POINT 115KV CKT 1
16WP	00NR	0	TO->FROM	G17_109	DAWSON CREEK - G17109_T(P) 230.00 230KV CKT 1	176	0.85088	192.1486	LTLMISS - RHAME 4 230.00 230KV CKT 1
20SP	00NR	0	TO->FROM	G17_109	DAWSON CREEK - G17109_T(P) 230.00 230KV CKT 1	176	0.85106	192.0109	BAKER - LTLMISS 230KV CKT 1
20WP	16ALL	0	TO->FROM	G17_109	DAWSON CREEK - G17109_T(P) 230.00 230KV CKT 1	176	0.88054	191.925	DAGLUM 4230.00 - GI1414 4230.00 230KV CKT 1
16WP	00NR	0	TO->FROM	G17_109	DAWSON CREEK - G17109_T(P) 230.00 230KV CKT 1	176	0.85088	191.6373	BAKER - LTLMISS 230KV CKT 1
20SP	16ALL	0	TO->FROM	G17_109	DAWSON CREEK - G17109_T(P) 230.00 230KV CKT 1	176	0.82631	191.6045	BEAVERHILL4 230.00 - DAWSON CREEK 230KV CKT 1
25SP	00NR	0	TO->FROM	G17_109	DAWSON CREEK - G17109_T(P) 230.00 230KV CKT 1	176	0.85526	191.5814	DAWSON CREEK - LEWIS & CLARK 115KV CKT 1
20WP	16ALL	0	TO->FROM	G17_109	DAWSON CREEK - G17109_T(P) 230.00 230KV CKT 1	176	0.88054	191.5273	CIRCLE - KPS12-CR7 115.00 115KV CKT 1
20WP	16ALL	0	TO->FROM	G17_109	DAWSON CREEK - G17109_T(P) 230.00 230KV CKT 1	176	0.88054	191.5273	KPS12-CR7 115.00 115/6.9KV TRANSFORMER CKT 1
20L	16ALL	0	TO->FROM	G17_109	DAWSON CREEK - G17109_T(P) 230.00 230KV CKT 1	175.8	0.87661	191.4767	COALHILL4 230.00 230/6.9KV TRANSFORMER CKT 1
20WP	16ALL	0	TO->FROM	G17_109	DAWSON CREEK - G17109_T(P) 230.00 230KV CKT 1	176	0.87808	191.3636	DAGLUM 4230.00 - RHAME 4 230.00 230KV CKT 1
20L	16NR	0	TO->FROM	G17_109	DAWSON CREEK - G17109_T(P) 230.00 230KV CKT 1	175.9	0.86657	190.621	COALHILL4 230.00 230/6.9KV TRANSFORMER CKT 1
20WP	00NR	0	TO->FROM	G17_109	DAWSON CREEK - G17109_T(P) 230.00 230KV CKT 1	176	0.86325	190.3068	FT PECK - KPS10-FP7 115.00 115KV CKT 1
20WP	00NR	0	TO->FROM	G17_109	DAWSON CREEK - G17109_T(P) 230.00 230KV CKT 1	176	0.86325	190.3068	KPS10-FP7 115.00 115/6.9KV TRANSFORMER CKT 1
20L	16NR	0	TO->FROM	G17_109	DAWSON CREEK - G17109_T(P) 230.00 230KV CKT 1	175.9	0.93646	190.2599	CULBERTSN E7115.00 - CULBERTSON 115KV CKT 1
20L	16ALL	0	TO->FROM	G17_109	DAWSON CREEK - G17109_T(P) 230.00 230KV CKT 1	175.8	0.87661	189.884	FT PECK - KPS10-FP7 115.00 115KV CKT 1
20L	16ALL	0	TO->FROM	G17_109	DAWSON CREEK - G17109_T(P) 230.00 230KV CKT 1	175.8	0.87661	189.884	KPS10-FP7 115.00 115/6.9KV TRANSFORMER CKT 1
16WP	00NR	0	TO->FROM	G17_109	DAWSON CREEK - G17109_T(P) 230.00 230KV CKT 1	176	0.86648	189.6441	RED CEDAR DC 115/34.5KV TRANSFORMER CKT 1
16WP	00NR	0	TO->FROM	G17_109	DAWSON CREEK - G17109_T(P) 230.00 230KV CKT 1	176	0.84388	189.4554	BELFIELD - CHARLIE CREEK 345KV CKT 1
16WP	00NR	0	TO->FROM	G17_109	DAWSON CREEK - G17109_T(P) 230.00 230KV CKT 1	176	0.86648	189.4036	CULBERTSN E7115.00 - RED CEDAR DC 115KV CKT 1
16WP	00NR	0	TO->FROM	G17_109	DAWSON CREEK - G17109_T(P) 230.00 230KV CKT 1	176	0.86751	189.32	JUDSON 3345.00 - PATENTGATE 3345.00 345KV CKT 1
25SP	00NR	0	TO->FROM	G17_109	DAWSON CREEK - G17109_T(P) 230.00 230KV CKT 1	176	0.81265	189.2318	BELFIELD - MEDORA 230KV CKT 1
20WP	16ALL	0	TO->FROM	G17_109	DAWSON CREEK - G17109_T(P) 230.00 230KV CKT 1	176	0.86434	189.2136	LTLMISS - RHAME 4 230.00 230KV CKT 1
16WP	00NR	0	TO->FROM	G17_109	DAWSON CREEK - G17109_T(P) 230.00 230KV CKT 1	176	0.85514	189.1164	DAWSON CREEK - LEWIS & CLARK 115KV CKT 1
20L	16NR	0	TO->FROM	G17_109	DAWSON CREEK - G17109_T(P) 230.00 230KV CKT 1	175.9	0.86657	189.0292	FT PECK - KPS10-FP7 115.00 115KV CKT 1
20L	16NR	0	TO->FROM	G17_109	DAWSON CREEK - G17109_T(P) 230.00 230KV CKT 1	175.9	0.86657	189.0292	KPS10-FP7 115.00 115/6.9KV TRANSFORMER CKT 1
20WP	16ALL	0	TO->FROM	G17_109	DAWSON CREEK - G17109_T(P) 230.00 230KV CKT 1	176	0.86434	188.7023	BAKER - LTLMISS 230KV CKT 1
20L	16ALL	0	TO->FROM	G17_109	DAWSON CREEK - G17109_T(P) 230.00 230KV CKT 1	175.8	0.87661	188.4619	BEAVERHILL4 230.00 - G15098_1 230.00 230KV CKT 1
20L	16ALL	0	TO->FROM	G17_109	DAWSON CREEK - G17109_T(P) 230.00 230KV CKT 1	175.8	0.87661	188.4619	G15098_1 230.00 230/34.5KV TRANSFORMER CKT 1
16WP	00NR	0	TO->FROM	G17_109	DAWSON CREEK - G17109_T(P) 230.00 230KV CKT 1	176	0.85514	188.4345	LEWIS & CLARK - RICHLAND 115KV CKT 1
25SP	00NR	0	TO->FROM	G17_109	DAWSON CREEK - G17109_T(P) 230.00 230KV CKT 1	176	0.81265	188.3795	BEAVERHILL4 230.00 - DAWSON CREEK 230KV CKT 1
25SP	00NR	0	TO->FROM	G17_109	DAWSON CREEK - G17109_T(P) 230.00 230KV CKT 1	176	0.81265	188.2091	BEAVERHILL4 230.00 - MEDORA 230KV CKT 1
20L	16ALL	0	TO->FROM	G17_109	DAWSON CREEK - G17109_T(P) 230.00 230KV CKT 1	175.8	0.87661	187.8931	DAGLUM 4230.00 - GI1414 4230.00 230KV CKT 1
20SP	00NR	0	TO->FROM	G17_109	DAWSON CREEK - G17109_T(P) 230.00 230KV CKT 1	176	0.8126	187.8591	BELFIELD - MEDORA 230KV CKT 1
20WP	00NR	0	TO->FROM	G17_109	DAWSON CREEK - G17109_T(P) 230.00 230KV CKT 1	176	0.8602	187.8204	CIRCLE - DAWSON CREEK 115KV CKT 1
20L	16ALL	0	TO->FROM	G17_109	DAWSON CREEK - G17109_T(P) 230.00 230KV CKT 1	175.8	0.87415	187.5017	DAGLUM 4230.00 - RHAME 4 230.00 230KV CKT 1
20L	16ALL	0	TO->FROM	G17_109	DAWSON CREEK - G17109_T(P) 230.00 230KV CKT 1	175.8	0.87785	187.4926	JUDSON 3345.00 - PATENTGATE 3345.00 345KV CKT 1
20SP	00NR	0	TO->FROM	G17_109	DAWSON CREEK - G17109_T(P) 230.00 230KV CKT 1	176	0.8126	187.1773	BEAVERHILL4 230.00 - DAWSON CREEK 230KV CKT 1
20L	16NR	0	TO->FROM	G17_109	DAWSON CREEK - G17109_T(P) 230.00 230KV CKT 1	175.9	0.86657	187.0395	BEAVERHILL4 230.00 - G15098_1 230.00 230KV CKT 1
20L	16NR	0	TO->FROM	G17_109	DAWSON CREEK - G17109_T(P) 230.00 230KV CKT 1	175.9	0.86657	187.0395	G15098_1 230.00 230/34.5KV TRANSFORMER CKT 1
20SP	00NR	0	TO->FROM	G17_109	DAWSON CREEK - G17109_T(P) 230.00 230KV CKT 1	176	0.8126	186.8932	BEAVERHILL4 230.00 - MEDORA 230KV CKT 1
20L	16NR	0	TO->FROM	G17_109	DAWSON CREEK - G17109_T(P) 230.00 230KV CKT 1	175.9	0.86657	186.8689	DAGLUM 4230.00 - GI1414 4230.00 230KV CKT 1
20L	16NR	0	TO->FROM	G17_109	DAWSON CREEK - G17109_T(P) 230.00 230KV CKT 1	175.9	0.86384	186.5997	DAGLUM 4230.00 - RHAME 4 230.00 230KV CKT 1
20WP	00NR	0	TO->FROM	G17_109	DAWSON CREEK - G17109_T(P) 230.00 230KV CKT 1	176	0.8778	186.5318	FT PECK - WOLF POINT 115KV CKT 2
20WP	00NR	0	TO->FROM	G17_109	DAWSON CREEK - G17109_T(P) 230.00 230KV CKT 1	176	0.87689	186.2527	FT PECK - WOLF POINT 115KV CKT 1
20WP	00NR	0	TO->FROM	G17_109	DAWSON CREEK - G17109_T(P) 230.00 230KV CKT 1	176	0.86325	186.1023	CIRCLE - KPS12-CR7 115.00 115KV CKT 1
20WP	00NR	0	TO->FROM	G17_109	DAWSON CREEK - G17109_T(P) 230.00 230KV CKT 1	176	0.86325	186.1023	KPS12-CR7 115.00 115/6.9KV TRANSFORMER CKT 1
20WP	16ALL	0	TO->FROM	G17_109	DAWSON CREEK - G17109_T(P) 230.00 230KV CKT 1	176	0.82551	185.9682	BEAVERHILL4 230.00 - DAWSON CREEK 230KV CKT 1
16WP	00NR	0	TO->FROM	G17_109	DAWSON CREEK - G17109_T(P) 230.00 230KV CKT 1	176	0.81242	185.9514	BELFIELD - MEDORA 230KV CKT 1
20WP	00NR	0	TO->FROM	G17_109	DAWSON CREEK - G17109_T(P) 230.00 230KV CKT 1	176	0.8606	185.5636	DAGLUM 4230.00 - RHAME 4 230.00 230KV CKT 1
16WP	00NR	0	TO->FROM	G17_109	DAWSON CREEK - G17109_T(P) 230.00 230KV CKT 1	176	0.81242	185.2127	BEAVERHILL4 230.00 - DAWSON CREEK 230KV CKT 1
16WP	00NR	0	TO->FROM	G17_109	DAWSON CREEK - G17109_T(P) 230.00 230KV CKT 1	176	0.81242	184.8718	BEAVERHILL4 230.00 - MEDORA 230KV CKT 1
20WP	00NR	0	TO->FROM	G17_109	DAWSON CREEK - G17109_T(P) 230.00 230KV CKT 1	176	0.84781	184.6018	LTLMISS - RHAME 4 230.00 230KV CKT 1

SEASON	GROUP	SCENARIO	DIRECTION	SOURCE	MONITORED ELEMENT	RATE (MVA)	TDF	CONTINGENCY LOADING %	CONTINGENCY
20L	16ALL	0	TO->FROM	G17_109	DAWSON CREEK - G17109_T(P) 230.00 230KV CKT 1	175.8	0.87793	184.207	CHAR.CK4 230.00 - WATFORD 230KV CKT 1
20WP	00NR	0	TO->FROM	G17_109	DAWSON CREEK - G17109_T(P) 230.00 230KV CKT 1	176	0.84781	184.0905	BAKER - LTLMISS 230KV CKT 1
20L	16ALL	0	TO->FROM	G17_109	DAWSON CREEK - G17109_T(P) 230.00 230KV CKT 1	175.8	0.86049	183.7179	BAKER - LTLMISS 230KV CKT 1
20L	16ALL	0	TO->FROM	G17_109	DAWSON CREEK - G17109_T(P) 230.00 230KV CKT 1	175.8	0.86543	183.6997	LEWIS & CLARK - RICHLAND 115KV CKT 1
20WP	00NR	0	TO->FROM	G17_109	DAWSON CREEK - G17109_T(P) 230.00 230KV CKT 1	176	0.84079	183.5527	BELFIELD - CHARLIE CREEK 345KV CKT 1
20L	16NR	0	TO->FROM	G17_109	DAWSON CREEK - G17109_T(P) 230.00 230KV CKT 1	175.9	0.86384	182.9612	BELFIELD - DAGLUM 4230.00 230KV CKT 1
20L	16ALL	0	TO->FROM	G17_109	DAWSON CREEK - G17109_T(P) 230.00 230KV CKT 1	175.8	0.86543	182.9602	DAWSON CREEK - LEWIS & CLARK 115KV CKT 1
20L	16NR	0	TO->FROM	G17_109	DAWSON CREEK - G17109_T(P) 230.00 230KV CKT 1	175.9	0.85097	182.8371	BAKER - LTLMISS 230KV CKT 1
20L	16NR	0	TO->FROM	G17_109	DAWSON CREEK - G17109_T(P) 230.00 230KV CKT 1	175.9	0.86283	182.7206	BOWMAN - RHAME 4 230.00 230KV CKT 1
20L	16NR	0	TO->FROM	G17_109	DAWSON CREEK - G17109_T(P) 230.00 230KV CKT 1	175.9	0.85531	182.5465	DAWSON CREEK - LEWIS & CLARK 115KV CKT 1
20L	16NR	0	TO->FROM	G17_109	DAWSON CREEK - G17109_T(P) 230.00 230KV CKT 1	175.9	0.84376	182.435	BELFIELD - CHARLIE CREEK 345KV CKT 1
20L	16ALL	0	TO->FROM	G17_109	DAWSON CREEK - G17109_T(P) 230.00 230KV CKT 1	175.8	0.82181	182.0956	BEAVERHILL4 230.00 - DAWSON CREEK 230KV CKT 1
20L	16NR	0	TO->FROM	G17_109	DAWSON CREEK - G17109_T(P) 230.00 230KV CKT 1	175.9	0.81225	180.6822	BEAVERHILL4 230.00 - DAWSON CREEK 230KV CKT 1
20WP	00NR	0	TO->FROM	G17_109	DAWSON CREEK - G17109_T(P) 230.00 230KV CKT 1	176	0.8096	180.0409	BELFIELD - MEDORA 230KV CKT 1
20WP	00NR	0	TO->FROM	G17_109	DAWSON CREEK - G17109_T(P) 230.00 230KV CKT 1	176	0.8096	178.9614	BEAVERHILL4 230.00 - DAWSON CREEK 230KV CKT 1
20WP	00NR	0	TO->FROM	G17_109	DAWSON CREEK - G17109_T(P) 230.00 230KV CKT 1	176	0.8096	178.8477	BEAVERHILL4 230.00 - MEDORA 230KV CKT 1
17G	16ALL	0	FROM->TO	G17_109	DAWSON CREEK - LEWIS & CLARK 115KV CKT 1	100.9	0.26617	132.6898	BEAVERHILL4 230.00 - MEDORA 230KV CKT 1
17G	16ALL	0	FROM->TO	G17_109	DAWSON CREEK - LEWIS & CLARK 115KV CKT 1	100.9	0.26617	129.0228	BELFIELD - MEDORA 230KV CKT 1
17G	16NR	0	FROM->TO	G17_109	DAWSON CREEK - LEWIS & CLARK 115KV CKT 1	101	0.26337	118.3945	BEAVERHILL4 230.00 - MEDORA 230KV CKT 1
17SP	16ALL	0	FROM->TO	G17_109	DAWSON CREEK - LEWIS & CLARK 115KV CKT 1	101	0.26664	115.6198	BEAVERHILL4 230.00 - MEDORA 230KV CKT 1
17G	16NR	0	FROM->TO	G17_109	DAWSON CREEK - LEWIS & CLARK 115KV CKT 1	101	0.26337	114.7311	BELFIELD - MEDORA 230KV CKT 1
17G	16ALL	0	FROM->TO	G17_109	DAWSON CREEK - LEWIS & CLARK 115KV CKT 1	100.9	0.19522	112.5431	BELFIELD - CHARLIE CREEK 345KV CKT 1
17SP	16ALL	0	FROM->TO	G17_109	DAWSON CREEK - LEWIS & CLARK 115KV CKT 1	101	0.26664	111.8574	BELFIELD - MEDORA 230KV CKT 1
17G	16ALL	0	FROM->TO	G17_109	DAWSON CREEK - LEWIS & CLARK 115KV CKT 1	100.9	0.26617	109.5976	BEAVERHILL4 230.00 - DAWSON CREEK 230KV CKT 1
17G	16NR	0	FROM->TO	G17_109	DAWSON CREEK - LEWIS & CLARK 115KV CKT 1	101	0.16877	104.8578	CULBERTSN E7115.00 - WILISTON 115KV CKT 1
17G	16ALL	0	FROM->TO	G17_109	DAWSON CREEK - LEWIS & CLARK 115KV CKT 1	100.9	0.195	101.1219	BAKER - LTLMISS 230KV CKT 1
16WP	16ALL	0	FROM->TO	G17_109	DAWSON CREEK - LEWIS & CLARK 115KV CKT 1	124	0.26639	101.0258	BEAVERHILL4 230.00 - MEDORA 230KV CKT 1
17G	16NR	0	FROM->TO	G17_109	DAWSON CREEK - LEWIS & CLARK 115KV CKT 1	101	0.26337	100.5727	BEAVERHILL4 230.00 - DAWSON CREEK 230KV CKT 1
25SP	16ALL	0	FROM->TO	G17_109	DICKINSON (KW1A 100) 230/115/13.8KV TRANSFORMER CKT 1	99.6	0.04084	128.1325	System Intact
25SP	16ALL	0	FROM->TO	G17_109	DICKINSON (KW1A 100) 230/115/13.8KV TRANSFORMER CKT 1	100	0.04084	127.22	System Intact
20SP	16ALL	0	FROM->TO	G17_109	DICKINSON (KW1A 100) 230/115/13.8KV TRANSFORMER CKT 1	99.1	0.04075	118.9586	System Intact
20SP	16ALL	0	FROM->TO	G17_109	DICKINSON (KW1A 100) 230/115/13.8KV TRANSFORMER CKT 1	99.9	0.04075	117.7057	System Intact
16WP	16ALL	0	FROM->TO	G17_109	DICKINSON (KW1A 100) 230/115/13.8KV TRANSFORMER CKT 1	99.3	0.04119	117.5428	System Intact
16WP	16ALL	0	FROM->TO	G17_109	DICKINSON (KW1A 100) 230/115/13.8KV TRANSFORMER CKT 1	100	0.04119	116.42	System Intact
20WP	16ALL	0	FROM->TO	G17_109	DICKINSON (KW1A 100) 230/115/13.8KV TRANSFORMER CKT 1	99.9	0.04057	115.6316	System Intact
25SP	00NR	0	FROM->TO	G17_109	DICKINSON (KW1A 100) 230/115/13.8KV TRANSFORMER CKT 1	124.2	0.08473	115.3894	BOWMAN - RHAME 4 230.00 230KV CKT 1
17SP	16ALL	0	FROM->TO	G17_109	DICKINSON (KW1A 100) 230/115/13.8KV TRANSFORMER CKT 1	99.6	0.04133	115.3333	System Intact
20WP	16ALL	0	FROM->TO	G17_109	DICKINSON (KW1A 100) 230/115/13.8KV TRANSFORMER CKT 1	99.9	0.04057	115.3313	System Intact
17SP	16ALL	0	FROM->TO	G17_109	DICKINSON (KW1A 100) 230/115/13.8KV TRANSFORMER CKT 1	100	0.04133	114.572	System Intact
25SP	00NR	0	FROM->TO	G17_109	DICKINSON (KW1A 100) 230/115/13.8KV TRANSFORMER CKT 1	124.9	0.08473	114.5025	BOWMAN - RHAME 4 230.00 230KV CKT 1
25SP	00NR	0	FROM->TO	G17_109	DICKINSON (KW1A 100) 230/115/13.8KV TRANSFORMER CKT 1	99	0.03383	112.4501	System Intact
20SP	00NR	0	FROM->TO	G17_109	DICKINSON (KW1A 100) 230/115/13.8KV TRANSFORMER CKT 1	123.5	0.08478	112.0887	BOWMAN - RHAME 4 230.00 230KV CKT 1
20L	16NR	0	FROM->TO	G17_109	DICKINSON (KW1A 100) 230/115/13.8KV TRANSFORMER CKT 1	125	0.08432	111.4259	BOWMAN - RHAME 4 230.00 230KV CKT 1
25SP	00NR	0	FROM->TO	G17_109	DICKINSON (KW1A 100) 230/115/13.8KV TRANSFORMER CKT 1	99.8	0.03383	111.3483	System Intact
20L	16NR	0	FROM->TO	G17_109	DICKINSON (KW1A 100) 230/115/13.8KV TRANSFORMER CKT 1	125	0.08432	111.2659	BOWMAN - RHAME 4 230.00 230KV CKT 1
20SP	00NR	0	FROM->TO	G17_109	DICKINSON (KW1A 100) 230/115/13.8KV TRANSFORMER CKT 1	124.5	0.08478	111.0278	BOWMAN - RHAME 4 230.00 230KV CKT 1
17G	16NR	0	FROM->TO	G17_109	DICKINSON (KW1A 100) 230/115/13.8KV TRANSFORMER CKT 1	124.8	0.08649	107.9942	BOWMAN - RHAME 4 230.00 230KV CKT 1
17SP	00NR	0	FROM->TO	G17_109	DICKINSON (KW1A 100) 230/115/13.8KV TRANSFORMER CKT 1	123.5	0.06188	107.9365	HEBRON 4 230.00 - MANDAN 4 230.00 230KV CKT 1
17SP	00NR	0	FROM->TO	G17_109	DICKINSON (KW1A 100) 230/115/13.8KV TRANSFORMER CKT 1	123.5	0.08613	107.7422	BOWMAN - RHAME 4 230.00 230KV CKT 1
17G	16NR	0	FROM->TO	G17_109	DICKINSON (KW1A 100) 230/115/13.8KV TRANSFORMER CKT 1	125	0.08649	107.6614	BOWMAN - RHAME 4 230.00 230KV CKT 1
20SP	00NR	0	FROM->TO	G17_109	DICKINSON (KW1A 100) 230/115/13.8KV TRANSFORMER CKT 1	98.2	0.03379	107.6505	System Intact
17SP	00NR	0	FROM->TO	G17_109	DICKINSON (KW1A 100) 230/115/13.8KV TRANSFORMER CKT 1	124.4	0.06188	106.9145	HEBRON 4 230.00 - MANDAN 4 230.00 230KV CKT 1
17SP	00NR	0	FROM->TO	G17_109	DICKINSON (KW1A 100) 230/115/13.8KV TRANSFORMER CKT 1	124.4	0.08613	106.8019	BOWMAN - RHAME 4 230.00 230KV CKT 1

SEASON	GROUP	SCENARIO	DIRECTION	SOURCE	MONITORED ELEMENT	RATE (MVA)	TDF	CONTINGENCY LOADING %	CONTINGENCY
20SP	00NR	0	FROM->TO	G17_109	DICKINSON (KW1A 100) 230/115/13.8KV TRANSFORMER CKT 1	99.4	0.03379	106.0491	System Intact
17G	16NR	0	FROM->TO	G17_109	DICKINSON (KW1A 100) 230/115/13.8KV TRANSFORMER CKT 1	124.8	0.06254	105.7795	HEBRON 4 230.00 - MANDAN 4 230.00 230KV CKT 1
17SP	00NR	0	FROM->TO	G17_109	DICKINSON (KW1A 100) 230/115/13.8KV TRANSFORMER CKT 1	98.1	0.03437	105.7068	System Intact
17G	16NR	0	FROM->TO	G17_109	DICKINSON (KW1A 100) 230/115/13.8KV TRANSFORMER CKT 1	125	0.06254	105.4502	HEBRON 4 230.00 - MANDAN 4 230.00 230KV CKT 1
25SP	00NR	0	FROM->TO	G17_109	DICKINSON (KW1A 100) 230/115/13.8KV TRANSFORMER CKT 1	124.2	0.06118	104.8129	HEBRON 4 230.00 - MANDAN 4 230.00 230KV CKT 1
17SP	00NR	0	FROM->TO	G17_109	DICKINSON (KW1A 100) 230/115/13.8KV TRANSFORMER CKT 1	99.3	0.03437	104.228	System Intact
25SP	00NR	0	FROM->TO	G17_109	DICKINSON (KW1A 100) 230/115/13.8KV TRANSFORMER CKT 1	124.9	0.06118	103.9853	HEBRON 4 230.00 - MANDAN 4 230.00 230KV CKT 1
20SP	00NR	0	FROM->TO	G17_109	DICKINSON (KW1A 100) 230/115/13.8KV TRANSFORMER CKT 1	123.5	0.06113	103.8555	HEBRON 4 230.00 - MANDAN 4 230.00 230KV CKT 1
20SP	00NR	0	FROM->TO	G17_109	DICKINSON (KW1A 100) 230/115/13.8KV TRANSFORMER CKT 1	124.5	0.06113	102.8607	HEBRON 4 230.00 - MANDAN 4 230.00 230KV CKT 1
20WP	00NR	0	FROM->TO	G17_109	DICKINSON (KW1A 100) 230/115/13.8KV TRANSFORMER CKT 1	99.7	0.03345	102.6118	System Intact
20WP	00NR	0	FROM->TO	G17_109	DICKINSON (KW1A 100) 230/115/13.8KV TRANSFORMER CKT 1	100	0.03345	102.104	System Intact
16WP	00NR	0	FROM->TO	G17_109	DICKINSON (KW1A 100) 230/115/13.8KV TRANSFORMER CKT 1	124.1	0.04466	100.8793	HETINGER (HETTINGR TR1) 230/115/13.8KV TRANSFORMER CKT 1
16WP	00NR	0	FROM->TO	G17_109	DICKINSON (KW1A 100) 230/115/13.8KV TRANSFORMER CKT 1	98.8	0.03441	100.6186	System Intact
16WP	00NR	0	FROM->TO	G17_109	DICKINSON (KW1A 100) 230/115/13.8KV TRANSFORMER CKT 1	124.7	0.04466	100.2335	HETINGER (HETTINGR TR1) 230/115/13.8KV TRANSFORMER CKT 1
20L	16NR	0	FROM->TO	G17_109	DICKINSON (KW1A 100) 230/115/13.8KV TRANSFORMER CKT 1	125	0.08432	100.0659	BOWMAN - HETINGER 230KV CKT 1
20L	16NR	0	TO->FROM	G17_109	ELK CREEK - NEWELL 115KV CKT 1	89.3	0.0481	101.5588	MAURINE - NUNDRWD-LNX3230.00 230KV CKT 1
20L	16NR	0	TO->FROM	G17_109	ELK CREEK - NEWELL 115KV CKT 1	89.3	0.0481	101.5588	NUNDRWD - NUNDRWD-LNX3230.00 230KV CKT Z
17SP	16ALL	0	FROM->TO	G17_109	FT PECK - WOLF POINT 115KV CKT 1	119.9	0.48898	173.2477	DAWSON CREEK - G17109_T(P) 230.00 230KV CKT 1
17G	16ALL	0	FROM->TO	G17_109	FT PECK - WOLF POINT 115KV CKT 1	120	0.48797	171.1	DAWSON CREEK - G17109_T(P) 230.00 230KV CKT 1
16WP	16ALL	0	FROM->TO	G17_109	FT PECK - WOLF POINT 115KV CKT 1	120	0.48835	169.4767	DAWSON CREEK - G17109_T(P) 230.00 230KV CKT 1
17G	16NR	0	FROM->TO	G17_109	FT PECK - WOLF POINT 115KV CKT 1	120	0.47664	167.854	DAWSON CREEK - G17109_T(P) 230.00 230KV CKT 1
17SP	00NR	0	FROM->TO	G17_109	FT PECK - WOLF POINT 115KV CKT 1	120	0.47929	165.894	DAWSON CREEK - G17109_T(P) 230.00 230KV CKT 1
16WP	00NR	0	FROM->TO	G17_109	FT PECK - WOLF POINT 115KV CKT 1	120	0.47933	159.4047	DAWSON CREEK - G17109_T(P) 230.00 230KV CKT 1
25SP	16ALL	0	FROM->TO	G17_109	FT PECK - WOLF POINT 115KV CKT 1	119.9	0.48917	156.9641	DAWSON CREEK - G17109_T(P) 230.00 230KV CKT 1
20SP	16ALL	0	FROM->TO	G17_109	FT PECK - WOLF POINT 115KV CKT 1	119.9	0.48906	156.7607	DAWSON CREEK - G17109_T(P) 230.00 230KV CKT 1
20WP	16ALL	0	FROM->TO	G17_109	FT PECK - WOLF POINT 115KV CKT 1	120	0.48849	152.8567	DAWSON CREEK - G17109_T(P) 230.00 230KV CKT 1
20SP	00NR	0	FROM->TO	G17_109	FT PECK - WOLF POINT 115KV CKT 1	119.9	0.47983	150.6636	DAWSON CREEK - G17109_T(P) 230.00 230KV CKT 1
25SP	00NR	0	FROM->TO	G17_109	FT PECK - WOLF POINT 115KV CKT 1	119.9	0.47985	150.5855	DAWSON CREEK - G17109_T(P) 230.00 230KV CKT 1
20WP	00NR	0	FROM->TO	G17_109	FT PECK - WOLF POINT 115KV CKT 1	119.9	0.47984	144.4944	DAWSON CREEK - G17109_T(P) 230.00 230KV CKT 1
20L	16ALL	0	FROM->TO	G17_109	FT PECK - WOLF POINT 115KV CKT 1	120	0.48594	141.34	DAWSON CREEK - G17109_T(P) 230.00 230KV CKT 1
20L	16NR	0	FROM->TO	G17_109	FT PECK - WOLF POINT 115KV CKT 1	120	0.47986	138.9627	DAWSON CREEK - G17109_T(P) 230.00 230KV CKT 1
17SP	16ALL	0	FROM->TO	G17_109	FT PECK - WOLF POINT 115KV CKT 2	128	0.50721	168.7125	DAWSON CREEK - G17109_T(P) 230.00 230KV CKT 1
17G	16ALL	0	FROM->TO	G17_109	FT PECK - WOLF POINT 115KV CKT 2	128	0.50617	166.5125	DAWSON CREEK - G17109_T(P) 230.00 230KV CKT 1
17G	16NR	0	FROM->TO	G17_109	FT PECK - WOLF POINT 115KV CKT 2	128	0.49441	163.3681	DAWSON CREEK - G17109_T(P) 230.00 230KV CKT 1
17SP	00NR	0	FROM->TO	G17_109	FT PECK - WOLF POINT 115KV CKT 2	128	0.49716	161.8681	DAWSON CREEK - G17109_T(P) 230.00 230KV CKT 1
16WP	16ALL	0	FROM->TO	G17_109	FT PECK - WOLF POINT 115KV CKT 2	132	0.50656	159.9182	DAWSON CREEK - G17109_T(P) 230.00 230KV CKT 1
25SP	16ALL	0	FROM->TO	G17_109	FT PECK - WOLF POINT 115KV CKT 2	127.9	0.50741	153.5043	DAWSON CREEK - G17109_T(P) 230.00 230KV CKT 1
20SP	16ALL	0	FROM->TO	G17_109	FT PECK - WOLF POINT 115KV CKT 2	127.9	0.50729	153.2322	DAWSON CREEK - G17109_T(P) 230.00 230KV CKT 1
16WP	00NR	0	FROM->TO	G17_109	FT PECK - WOLF POINT 115KV CKT 2	132	0.4972	150.3818	DAWSON CREEK - G17109_T(P) 230.00 230KV CKT 1
20SP	00NR	0	FROM->TO	G17_109	FT PECK - WOLF POINT 115KV CKT 2	127.9	0.49772	147.514	DAWSON CREEK - G17109_T(P) 230.00 230KV CKT 1
25SP	00NR	0	FROM->TO	G17_109	FT PECK - WOLF POINT 115KV CKT 2	127.9	0.49775	147.4433	DAWSON CREEK - G17109_T(P) 230.00 230KV CKT 1
20WP	16ALL	0	FROM->TO	G17_109	FT PECK - WOLF POINT 115KV CKT 2	132	0.5067	144.6576	DAWSON CREEK - G17109_T(P) 230.00 230KV CKT 1
20L	16ALL	0	FROM->TO	G17_109	FT PECK - WOLF POINT 115KV CKT 2	128	0.50406	138.1969	DAWSON CREEK - G17109_T(P) 230.00 230KV CKT 1
20WP	00NR	0	FROM->TO	G17_109	FT PECK - WOLF POINT 115KV CKT 2	131.9	0.49773	137.1293	DAWSON CREEK - G17109_T(P) 230.00 230KV CKT 1
20L	16NR	0	FROM->TO	G17_109	FT PECK - WOLF POINT 115KV CKT 2	128	0.49775	136	DAWSON CREEK - G17109_T(P) 230.00 230KV CKT 1
17SP	16ALL	0	FROM->TO	G17_109	FT PECK 230/115KV TRANSFORMER CKT 1	100	0.9974	390.56	DAWSON CREEK - G17109_T(P) 230.00 230KV CKT 1
17G	16ALL	0	FROM->TO	G17_109	FT PECK 230/115KV TRANSFORMER CKT 1	100	0.99599	387.096	DAWSON CREEK - G17109_T(P) 230.00 230KV CKT 1
16WP	16ALL	0	FROM->TO	G17_109	FT PECK 230/115KV TRANSFORMER CKT 1	100	0.99652	384.308	DAWSON CREEK - G17109_T(P) 230.00 230KV CKT 1
17G	16NR	0	FROM->TO	G17_109	FT PECK 230/115KV TRANSFORMER CKT 1	100	0.98034	381.6088	DAWSON CREEK - G17109_T(P) 230.00 230KV CKT 1
17SP	00NR	0	FROM->TO	G17_109	FT PECK 230/115KV TRANSFORMER CKT 1	100	0.984	378.68	DAWSON CREEK - G17109_T(P) 230.00 230KV CKT 1
25SP	16ALL	0	FROM->TO	G17_109	FT PECK 230/115KV TRANSFORMER CKT 1	100	0.99766	370.964	DAWSON CREEK - G17109_T(P) 230.00 230KV CKT 1
20SP	16ALL	0	FROM->TO	G17_109	FT PECK 230/115KV TRANSFORMER CKT 1	100	0.99751	370.604	DAWSON CREEK - G17109_T(P) 230.00 230KV CKT 1
16WP	00NR	0	FROM->TO	G17_109	FT PECK 230/115KV TRANSFORMER CKT 1	100	0.98407	367.6024	DAWSON CREEK - G17109_T(P) 230.00 230KV CKT 1

SEASON	GROUP	SCENARIO	DIRECTION	SOURCE	MONITORED ELEMENT	RATE (MVA)	TDF	CONTINGENCY LOADING %	CONTINGENCY
20WP	16ALL	0	FROM->TO	G17_109	FT PECK 230/115KV TRANSFORMER CKT 1	100	0.99671	364.184	DAWSON CREEK - G17109_T(P) 230.00 230KV CKT 1
20L	16ALL	0	FROM->TO	G17_109	FT PECK 230/115KV TRANSFORMER CKT 1	99.7	0.99	361.0833	DAWSON CREEK - G17109_T(P) 230.00 230KV CKT 1
20SP	00NR	0	FROM->TO	G17_109	FT PECK 230/115KV TRANSFORMER CKT 1	100	0.98476	360.7232	DAWSON CREEK - G17109_T(P) 230.00 230KV CKT 1
25SP	00NR	0	FROM->TO	G17_109	FT PECK 230/115KV TRANSFORMER CKT 1	100	0.98479	360.5328	DAWSON CREEK - G17109_T(P) 230.00 230KV CKT 1
20L	16NR	0	FROM->TO	G17_109	FT PECK 230/115KV TRANSFORMER CKT 1	99.7	0.97761	355.4014	DAWSON CREEK - G17109_T(P) 230.00 230KV CKT 1
20WP	00NR	0	FROM->TO	G17_109	FT PECK 230/115KV TRANSFORMER CKT 1	100	0.98478	350.4296	DAWSON CREEK - G17109_T(P) 230.00 230KV CKT 1
17SP	13ALL	0	FROM->TO	G17_109	FT PECK 230/115KV TRANSFORMER CKT 1	100	0.99758	131.9766	DAWSON CREEK - G17109_T(P) 230.00 230KV CKT 1
16WP	13ALL	0	FROM->TO	G17_109	FT PECK 230/115KV TRANSFORMER CKT 1	100	0.99673	127.8822	DAWSON CREEK - G17109_T(P) 230.00 230KV CKT 1
17G	13ALL	0	FROM->TO	G17_109	FT PECK 230/115KV TRANSFORMER CKT 1	100	0.99647	126.6616	DAWSON CREEK - G17109_T(P) 230.00 230KV CKT 1
25SP	13ALL	0	FROM->TO	G17_109	FT PECK 230/115KV TRANSFORMER CKT 1	100	0.99779	113.0741	DAWSON CREEK - G17109_T(P) 230.00 230KV CKT 1
20SP	13ALL	0	FROM->TO	G17_109	FT PECK 230/115KV TRANSFORMER CKT 1	100	0.99765	112.9091	DAWSON CREEK - G17109_T(P) 230.00 230KV CKT 1
20WP	13ALL	0	FROM->TO	G17_109	FT PECK 230/115KV TRANSFORMER CKT 1	100	0.99686	108.3426	DAWSON CREEK - G17109_T(P) 230.00 230KV CKT 1
17SP	00NR	0	FROM->TO	G17_109	FT THOMPSON (FT2 KU1A) 345/230/13.8KV TRANSFORMER CKT 1	299.2	0.03362	144.438	GR ISLD-LNX3345.00 - GRAND ISLAND 345KV CKT Z
17SP	00NR	0	FROM->TO	G17_109	FT THOMPSON (FT2 KU1A) 345/230/13.8KV TRANSFORMER CKT 1	299.2	0.03362	144.438	GR ISLD-LNX3345.00 - HOLT.CO3 345.00 345KV CKT 1
17SP	00NR	0	FROM->TO	G17_109	FT THOMPSON (FT2 KU1A) 345/230/13.8KV TRANSFORMER CKT 1	300.1	0.03362	144.0048	GR ISLD-LNX3345.00 - GRAND ISLAND 345KV CKT Z
17SP	00NR	0	FROM->TO	G17_109	FT THOMPSON (FT2 KU1A) 345/230/13.8KV TRANSFORMER CKT 1	300.1	0.03362	144.0048	GR ISLD-LNX3345.00 - HOLT.CO3 345.00 345KV CKT 1
16WP	00NR	0	FROM->TO	G17_109	FT THOMPSON (FT2 KU1A) 345/230/13.8KV TRANSFORMER CKT 1	309.2	0.0335	126.7852	GR ISLD-LNX3345.00 - GRAND ISLAND 345KV CKT Z
16WP	00NR	0	FROM->TO	G17_109	FT THOMPSON (FT2 KU1A) 345/230/13.8KV TRANSFORMER CKT 1	309.2	0.0335	126.7852	GR ISLD-LNX3345.00 - HOLT.CO3 345.00 345KV CKT 1
16WP	00NR	0	FROM->TO	G17_109	FT THOMPSON (FT2 KU1A) 345/230/13.8KV TRANSFORMER CKT 1	309.5	0.0335	126.6947	GR ISLD-LNX3345.00 - GRAND ISLAND 345KV CKT Z
16WP	00NR	0	FROM->TO	G17_109	FT THOMPSON (FT2 KU1A) 345/230/13.8KV TRANSFORMER CKT 1	309.5	0.0335	126.6947	GR ISLD-LNX3345.00 - HOLT.CO3 345.00 345KV CKT 1
17SP	00NR	0	FROM->TO	G17_109	FT THOMPSON (FT2 KU1A) 345/230/13.8KV TRANSFORMER CKT 1	299.2	0.03362	108.0075	GRPRAR1-LNX3345.00 - YANKTON 345KV CKT Z
17SP	00NR	0	FROM->TO	G17_109	FT THOMPSON (FT2 KU1A) 345/230/13.8KV TRANSFORMER CKT 1	300.1	0.03362	107.6836	GRPRAR1-LNX3345.00 - YANKTON 345KV CKT Z
17SP	00NR	0	FROM->TO	G17_109	FT THOMPSON (FT2 KU1A) 345/230/13.8KV TRANSFORMER CKT 1	299.2	0.03362	107.1719	GRPRAR1-LNX3345.00 - HOLT.CO3 345.00 345KV CKT 1
17SP	00NR	0	FROM->TO	G17_109	FT THOMPSON (FT2 KU1A) 345/230/13.8KV TRANSFORMER CKT 1	300.1	0.03362	106.8505	GRPRAR1-LNX3345.00 - HOLT.CO3 345.00 345KV CKT 1
20SP	00NR	0	FROM->TO	G17_109	FT THOMPSON (FT2 KU1A) 345/230/13.8KV TRANSFORMER CKT 1	302.7	0.03267	103.6189	GRPRAR1-LNX3345.00 - YANKTON 345KV CKT Z
20SP	00NR	0	FROM->TO	G17_109	FT THOMPSON (FT2 KU1A) 345/230/13.8KV TRANSFORMER CKT 1	303.2	0.03267	103.448	GRPRAR1-LNX3345.00 - YANKTON 345KV CKT Z
25SP	00NR	0	FROM->TO	G17_109	FT THOMPSON (FT2 KU1A) 345/230/13.8KV TRANSFORMER CKT 1	303.2	0.03269	102.6586	GRPRAR1-LNX3345.00 - YANKTON 345KV CKT Z
20SP	00NR	0	FROM->TO	G17_109	FT THOMPSON (FT2 KU1A) 345/230/13.8KV TRANSFORMER CKT 1	302.7	0.03267	102.5617	GRPRAR1-LNX3345.00 - HOLT.CO3 345.00 345KV CKT 1
25SP	00NR	0	FROM->TO	G17_109	FT THOMPSON (FT2 KU1A) 345/230/13.8KV TRANSFORMER CKT 1	303.6	0.03269	102.5563	GRPRAR1-LNX3345.00 - YANKTON 345KV CKT Z
20SP	00NR	0	FROM->TO	G17_109	FT THOMPSON (FT2 KU1A) 345/230/13.8KV TRANSFORMER CKT 1	303.2	0.03267	102.3926	GRPRAR1-LNX3345.00 - HOLT.CO3 345.00 345KV CKT 1
25SP	00NR	0	FROM->TO	G17_109	FT THOMPSON (FT2 KU1A) 345/230/13.8KV TRANSFORMER CKT 1	303.2	0.03269	101.6361	GRPRAR1-LNX3345.00 - HOLT.CO3 345.00 345KV CKT 1
25SP	00NR	0	FROM->TO	G17_109	FT THOMPSON (FT2 KU1A) 345/230/13.8KV TRANSFORMER CKT 1	303.6	0.03269	101.5023	GRPRAR1-LNX3345.00 - HOLT.CO3 345.00 345KV CKT 1
17SP	00NR	0	FROM->TO	G17_109	FT THOMPSON (FT2 KU1B) 345/230/13.8KV TRANSFORMER CKT 1	299.1	0.03367	144.6922	GR ISLD-LNX3345.00 - GRAND ISLAND 345KV CKT Z
17SP	00NR	0	FROM->TO	G17_109	FT THOMPSON (FT2 KU1B) 345/230/13.8KV TRANSFORMER CKT 1	299.1	0.03367	144.6922	GR ISLD-LNX3345.00 - HOLT.CO3 345.00 345KV CKT 1
17SP	00NR	0	FROM->TO	G17_109	FT THOMPSON (FT2 KU1B) 345/230/13.8KV TRANSFORMER CKT 1	300.1	0.03367	144.2101	GR ISLD-LNX3345.00 - GRAND ISLAND 345KV CKT Z
17SP	00NR	0	FROM->TO	G17_109	FT THOMPSON (FT2 KU1B) 345/230/13.8KV TRANSFORMER CKT 1	300.1	0.03367	144.2101	GR ISLD-LNX3345.00 - HOLT.CO3 345.00 345KV CKT 1
16WP	00NR	0	FROM->TO	G17_109	FT THOMPSON (FT2 KU1B) 345/230/13.8KV TRANSFORMER CKT 1	309.2	0.03355	126.9845	GR ISLD-LNX3345.00 - GRAND ISLAND 345KV CKT Z
16WP	00NR	0	FROM->TO	G17_109	FT THOMPSON (FT2 KU1B) 345/230/13.8KV TRANSFORMER CKT 1	309.2	0.03355	126.9845	GR ISLD-LNX3345.00 - HOLT.CO3 345.00 345KV CKT 1
16WP	00NR	0	FROM->TO	G17_109	FT THOMPSON (FT2 KU1B) 345/230/13.8KV TRANSFORMER CKT 1	309.5	0.03355	126.8614	GR ISLD-LNX3345.00 - GRAND ISLAND 345KV CKT Z
16WP	00NR	0	FROM->TO	G17_109	FT THOMPSON (FT2 KU1B) 345/230/13.8KV TRANSFORMER CKT 1	309.5	0.03355	126.8614	GR ISLD-LNX3345.00 - HOLT.CO3 345.00 345KV CKT 1
17SP	00NR	0	FROM->TO	G17_109	FT THOMPSON (FT2 KU1B) 345/230/13.8KV TRANSFORMER CKT 1	299.1	0.03367	108.1827	GRPRAR1-LNX3345.00 - YANKTON 345KV CKT Z
17SP	00NR	0	FROM->TO	G17_109	FT THOMPSON (FT2 KU1B) 345/230/13.8KV TRANSFORMER CKT 1	300.1	0.03367	107.8555	GRPRAR1-LNX3345.00 - YANKTON 345KV CKT Z
17SP	00NR	0	FROM->TO	G17_109	FT THOMPSON (FT2 KU1B) 345/230/13.8KV TRANSFORMER CKT 1	299.1	0.03367	107.3468	GRPRAR1-LNX3345.00 - HOLT.CO3 345.00 345KV CKT 1
17SP	00NR	0	FROM->TO	G17_109	FT THOMPSON (FT2 KU1B) 345/230/13.8KV TRANSFORMER CKT 1	300.1	0.03367	107.0225	GRPRAR1-LNX3345.00 - HOLT.CO3 345.00 345KV CKT 1
20SP	00NR	0	FROM->TO	G17_109	FT THOMPSON (FT2 KU1B) 345/230/13.8KV TRANSFORMER CKT 1	302.7	0.03272	103.7563	GRPRAR1-LNX3345.00 - YANKTON 345KV CKT Z
20SP	00NR	0	FROM->TO	G17_109	FT THOMPSON (FT2 KU1B) 345/230/13.8KV TRANSFORMER CKT 1	303.1	0.03272	103.6524	GRPRAR1-LNX3345.00 - YANKTON 345KV CKT Z
25SP	00NR	0	FROM->TO	G17_109	FT THOMPSON (FT2 KU1B) 345/230/13.8KV TRANSFORMER CKT 1	303.1	0.03274	102.8627	GRPRAR1-LNX3345.00 - YANKTON 345KV CKT Z
25SP	00NR	0	FROM->TO	G17_109	FT THOMPSON (FT2 KU1B) 345/230/13.8KV TRANSFORMER CKT 1	303.5	0.03274	102.7271	GRPRAR1-LNX3345.00 - YANKTON 345KV CKT Z
20SP	00NR	0	FROM->TO	G17_109	FT THOMPSON (FT2 KU1B) 345/230/13.8KV TRANSFORMER CKT 1	302.7	0.03272	102.6992	GRPRAR1-LNX3345.00 - HOLT.CO3 345.00 345KV CKT 1
20SP	00NR	0	FROM->TO	G17_109	FT THOMPSON (FT2 KU1B) 345/230/13.8KV TRANSFORMER CKT 1	303.1	0.03272	102.5636	GRPRAR1-LNX3345.00 - HOLT.CO3 345.00 345KV CKT 1
25SP	00NR	0	FROM->TO	G17_109	FT THOMPSON (FT2 KU1B) 345/230/13.8KV TRANSFORMER CKT 1	303.1	0.03274	101.8069	GRPRAR1-LNX3345.00 - HOLT.CO3 345.00 345KV CKT 1
25SP	00NR	0	FROM->TO	G17_109	FT THOMPSON (FT2 KU1B) 345/230/13.8KV TRANSFORMER CKT 1	303.5	0.03274	101.6728	GRPRAR1-LNX3345.00 - HOLT.CO3 345.00 345KV CKT 1
17SP	16ALL	0	TO->FROM	G17_109	G12_012IST 115.00 - WOLF POINT 115KV CKT 1	78.5	0.43912	199.7044	DAWSON CREEK - G17109_T(P) 230.00 230KV CKT 1

SEASON	GROUP	SCENARIO	DIRECTION	SOURCE	MONITORED ELEMENT	RATE (MVA)	TDF	CONTINGENCY LOADING %	CONTINGENCY
17SP	00NR	0	TO->FROM	G17_109	G12_012IST 115.00 - WOLF POINT 115KV CKT 1	78.6	0.42841	197.317	DAWSON CREEK - G17109_T(P) 230.00 230KV CKT 1
17G	16NR	0	TO->FROM	G17_109	G12_012IST 115.00 - WOLF POINT 115KV CKT 1	78.4	0.42703	196.6194	DAWSON CREEK - G17109_T(P) 230.00 230KV CKT 1
17G	16ALL	0	TO->FROM	G17_109	G12_012IST 115.00 - WOLF POINT 115KV CKT 1	78.7	0.43828	196.2287	DAWSON CREEK - G17109_T(P) 230.00 230KV CKT 1
25SP	16ALL	0	TO->FROM	G17_109	G12_012IST 115.00 - WOLF POINT 115KV CKT 1	78.7	0.43911	196.1576	DAWSON CREEK - G17109_T(P) 230.00 230KV CKT 1
20SP	16ALL	0	TO->FROM	G17_109	G12_012IST 115.00 - WOLF POINT 115KV CKT 1	78.6	0.43899	188.9669	DAWSON CREEK - G17109_T(P) 230.00 230KV CKT 1
25SP	00NR	0	TO->FROM	G17_109	G12_012IST 115.00 - WOLF POINT 115KV CKT 1	78.7	0.42834	187.508	DAWSON CREEK - G17109_T(P) 230.00 230KV CKT 1
20SP	00NR	0	TO->FROM	G17_109	G12_012IST 115.00 - WOLF POINT 115KV CKT 1	78.7	0.42831	186.2252	DAWSON CREEK - G17109_T(P) 230.00 230KV CKT 1
20L	16ALL	0	TO->FROM	G17_109	G12_012IST 115.00 - WOLF POINT 115KV CKT 1	78.5	0.43619	171.7299	DAWSON CREEK - G17109_T(P) 230.00 230KV CKT 1
20L	16NR	0	TO->FROM	G17_109	G12_012IST 115.00 - WOLF POINT 115KV CKT 1	78.5	0.42959	171.68	DAWSON CREEK - G17109_T(P) 230.00 230KV CKT 1
16WP	16ALL	0	TO->FROM	G17_109	G12_012IST 115.00 - WOLF POINT 115KV CKT 1	87.5	0.43855	171.4743	DAWSON CREEK - G17109_T(P) 230.00 230KV CKT 1
20WP	16ALL	0	TO->FROM	G17_109	G12_012IST 115.00 - WOLF POINT 115KV CKT 1	87.5	0.43838	164.6674	DAWSON CREEK - G17109_T(P) 230.00 230KV CKT 1
20WP	00NR	0	TO->FROM	G17_109	G12_012IST 115.00 - WOLF POINT 115KV CKT 1	87.6	0.42461	158.0767	DAWSON CREEK - G17109_T(P) 230.00 230KV CKT 1
16WP	00NR	0	TO->FROM	G17_109	G12_012IST 115.00 - WOLF POINT 115KV CKT 1	87.3	0.42846	154.1892	DAWSON CREEK - G17109_T(P) 230.00 230KV CKT 1
20L	16NR	0	FROM->TO	G17_109	G14_001IST 115.00 - NEWELL 115KV CKT 1	88.4	0.0481	109.6063	MAURINE - NUNDRWD-LNX3230.00 230KV CKT 1
20L	16NR	0	FROM->TO	G17_109	G14_001IST 115.00 - NEWELL 115KV CKT 1	88.4	0.0481	109.6063	NUNDRWD - NUNDRWD-LNX3230.00 230KV CKT Z
17G	16NR	0	TO->FROM	G17_109	GARRISON - STANTONTAP 7115.00 115KV CKT 1	121	0.04457	105.5888	CENTER - COYOTE 345KV CKT 1
16WP	00NR	0	TO->FROM	G17_109	GARRISON - STANTONTAP 7115.00 115KV CKT 1	132	0.04166	104.2661	CENTER - COYOTE 345KV CKT 1
20WP	00NR	0	TO->FROM	G17_109	GARRISON - STANTONTAP 7115.00 115KV CKT 1	132	0.03903	102.8709	CENTER - COYOTE 345KV CKT 1
20L	16NR	0	TO->FROM	G17_109	GLENHAM - L3 HAWDON 230KV CKT 1	209.8	0.03353	110.7386	FT THOMPSON - FTTHOM1-LNX3345.00 345KV CKT Z
20L	16NR	0	TO->FROM	G17_109	GLENHAM - L3 HAWDON 230KV CKT 1	209.8	0.03353	110.7386	FTTHOM1-LNX3345.00 - G16-017-TAP 345.00 345KV CKT 1
20L	16NR	0	TO->FROM	G17_109	GLENHAM - L3 HAWDON 230KV CKT 1	209.8	0.03353	109.3563	P12:345:UMZB:# 108 #: LOS FT IN ND. LOS FT
20L	16NR	0	TO->FROM	G17_109	GLENHAM - L3 HAWDON 230KV CKT 1	209.8	0.03353	108.4031	LELAND OLDS - LELAND2-LNX3345.00 345KV CKT Z
20L	16NR	0	TO->FROM	G17_109	GLENHAM - L3 HAWDON 230KV CKT 1	209.8	0.03353	107.6881	G16-017-TAP 345.00 - LELAND2-LNX3345.00 345KV CKT 1
20L	16NR	0	TO->FROM	G17_109	GLENHAM - L3 HAWDON 230KV CKT 1	209.8	0.04785	104.2002	BISON - HETINGER 230KV CKT 1
20L	16NR	0	TO->FROM	G17_109	GLENHAM - L3 HAWDON 230KV CKT 1	209.8	0.04785	102.5319	BISON - MAURINE 230KV CKT 1
17G	16NR	0	TO->FROM	G17_109	GLENHAM - L3 HAWDON 230KV CKT 1	209.8	0.04509	102.4923	FT THOMPSON - FTTHOM1-LNX3345.00 345KV CKT Z
17G	16NR	0	TO->FROM	G17_109	GLENHAM - L3 HAWDON 230KV CKT 1	209.8	0.04509	102.4923	FTTHOM1-LNX3345.00 - G16-017-TAP 345.00 345KV CKT 1
17G	16NR	0	TO->FROM	G17_109	GLENHAM - L3 HAWDON 230KV CKT 1	209.8	0.04509	101.11	P12:345:UMZB:# 108 #: LOS FT IN ND. LOS FT
17G	16NR	0	TO->FROM	G17_109	GLENHAM - L3 HAWDON 230KV CKT 1	209.8	0.04509	100.1567	LELAND OLDS - LELAND2-LNX3345.00 345KV CKT Z
17G	16NR	0	FROM->TO	G17_109	HURON (BD KU2A) 345/230/13.8KV TRANSFORMER CKT 1	387	0.06717	120.5929	FT THOMPSON - FTTHOM1-LNX3345.00 345KV CKT Z
17G	16NR	0	FROM->TO	G17_109	HURON (BD KU2A) 345/230/13.8KV TRANSFORMER CKT 1	387	0.06717	120.5929	FTTHOM1-LNX3345.00 - G16-017-TAP 345.00 345KV CKT 1
17G	16NR	0	FROM->TO	G17_109	HURON (BD KU2A) 345/230/13.8KV TRANSFORMER CKT 1	387	0.06282	118.9412	LELAND OLDS - LELAND1-LNX3345.00 345KV CKT Z
17G	16NR	0	FROM->TO	G17_109	HURON (BD KU2A) 345/230/13.8KV TRANSFORMER CKT 1	387	0.06717	118.9133	P12:345:UMZB:# 108 #: LOS FT IN ND. LOS FT
17G	16NR	0	FROM->TO	G17_109	HURON (BD KU2A) 345/230/13.8KV TRANSFORMER CKT 1	387	0.06282	118.8378	P12:345:UMZB:# 109 #: LOS GRT IN ND. LOS GRT
17G	16NR	0	FROM->TO	G17_109	HURON (BD KU2A) 345/230/13.8KV TRANSFORMER CKT 1	387	0.06717	118.5257	LELAND OLDS - LELAND2-LNX3345.00 345KV CKT Z
17G	16NR	0	FROM->TO	G17_109	HURON (BD KU2A) 345/230/13.8KV TRANSFORMER CKT 1	395.4	0.06717	118.1574	FT THOMPSON - FTTHOM1-LNX3345.00 345KV CKT Z
17G	16NR	0	FROM->TO	G17_109	HURON (BD KU2A) 345/230/13.8KV TRANSFORMER CKT 1	395.4	0.06717	118.1574	FTTHOM1-LNX3345.00 - G16-017-TAP 345.00 345KV CKT 1
17G	16NR	0	FROM->TO	G17_109	HURON (BD KU2A) 345/230/13.8KV TRANSFORMER CKT 1	387	0.06282	118.1143	GROTON - GROTON-LNX3 345.00 345KV CKT Z
17G	16NR	0	FROM->TO	G17_109	HURON (BD KU2A) 345/230/13.8KV TRANSFORMER CKT 1	387	0.06282	118.1143	GROTON-LNX3 345.00 - LELAND1-LNX3345.00 345KV CKT 1
17G	16NR	0	FROM->TO	G17_109	HURON (BD KU2A) 345/230/13.8KV TRANSFORMER CKT 1	387	0.06717	117.8539	G16-017-TAP 345.00 - LELAND2-LNX3345.00 345KV CKT 1
17G	16NR	0	FROM->TO	G17_109	HURON (BD KU2A) 345/230/13.8KV TRANSFORMER CKT 1	395.4	0.06282	116.5661	LELAND OLDS - LELAND1-LNX3345.00 345KV CKT Z
17G	16NR	0	FROM->TO	G17_109	HURON (BD KU2A) 345/230/13.8KV TRANSFORMER CKT 1	395.4	0.06717	116.5388	P12:345:UMZB:# 108 #: LOS FT IN ND. LOS FT
17G	16NR	0	FROM->TO	G17_109	HURON (BD KU2A) 345/230/13.8KV TRANSFORMER CKT 1	395.4	0.06282	116.4397	P12:345:UMZB:# 109 #: LOS GRT IN ND. LOS GRT
17G	16NR	0	FROM->TO	G17_109	HURON (BD KU2A) 345/230/13.8KV TRANSFORMER CKT 1	395.4	0.06717	116.1594	LELAND OLDS - LELAND2-LNX3345.00 345KV CKT Z
17G	16NR	0	FROM->TO	G17_109	HURON (BD KU2A) 345/230/13.8KV TRANSFORMER CKT 1	395.4	0.06282	115.7568	GROTON - GROTON-LNX3 345.00 345KV CKT Z
17G	16NR	0	FROM->TO	G17_109	HURON (BD KU2A) 345/230/13.8KV TRANSFORMER CKT 1	395.4	0.06282	115.7568	GROTON-LNX3 345.00 - LELAND1-LNX3345.00 345KV CKT 1
17G	16NR	0	FROM->TO	G17_109	HURON (BD KU2A) 345/230/13.8KV TRANSFORMER CKT 1	395.4	0.06717	115.4766	G16-017-TAP 345.00 - LELAND2-LNX3345.00 345KV CKT 1
17G	16NR	0	FROM->TO	G17_109	HURON (BD KU2A) 345/230/13.8KV TRANSFORMER CKT 1	387	0.05652	113.3298	RIEL - ROSEAU 500KV CKT 1
17G	16NR	0	FROM->TO	G17_109	HURON (BD KU2A) 345/230/13.8KV TRANSFORMER CKT 1	387	0.05652	113.0197	ROSEAU - ROSEAUM 2 500.00 500KV CKT 1
17G	16NR	0	FROM->TO	G17_109	HURON (BD KU2A) 345/230/13.8KV TRANSFORMER CKT 1	387	0.05652	113.0197	ROSEAU - ROSEAUM 2 500.00 500KV CKT 1
17G	16NR	0	FROM->TO	G17_109	HURON (BD KU2A) 345/230/13.8KV TRANSFORMER CKT 1	387	0.05652	112.7097	FORBES - ROSEAU 500KV CKT 1
17G	16NR	0	FROM->TO	G17_109	HURON (BD KU2A) 345/230/13.8KV TRANSFORMER CKT 1	395.4	0.05652	111.0487	RIEL - ROSEAU 500KV CKT 1
17G	16NR	0	FROM->TO	G17_109	HURON (BD KU2A) 345/230/13.8KV TRANSFORMER CKT 1	395.4	0.05652	110.7705	ROSEAU - ROSEAUM 2 500.00 500KV CKT 1

SEASON	GROUP	SCENARIO	DIRECTION	SOURCE	MONITORED ELEMENT	RATE (MVA)	TDF	CONTINGENCY LOADING %	CONTINGENCY
17G	16NR	0	FROM->TO	G17_109	HURON (BD KU2A) 345/230/13.8KV TRANSFORMER CKT 1	395.4	0.05652	110.7705	ROSEAU - ROSEAUM 2 500.00 500KV CKT 1
17G	16NR	0	FROM->TO	G17_109	HURON (BD KU2A) 345/230/13.8KV TRANSFORMER CKT 1	395.4	0.05652	110.467	FORBES - ROSEAU 500KV CKT 1
17G	16NR	0	FROM->TO	G17_109	HURON (BD KU2A) 345/230/13.8KV TRANSFORMER CKT 1	387	0.05756	108.4029	BUFFALO - JAMESTOWN 345KV CKT 1
17G	16NR	0	FROM->TO	G17_109	HURON (BD KU2A) 345/230/13.8KV TRANSFORMER CKT 1	387	0.05856	107.8654	G09_001IST 345.00 - WATERTOWN 345KV CKT 1
17SP	16ALL	0	FROM->TO	G17_109	HURON (BD KU2A) 345/230/13.8KV TRANSFORMER CKT 1	384.1	0.12106	107.221	System Intact
20L	16NR	0	FROM->TO	G17_109	HURON (BD KU2A) 345/230/13.8KV TRANSFORMER CKT 1	392.9	0.05336	107.1456	FT THOMPSON - FTTHOM1-LNX3345.00 345KV CKT Z
20L	16NR	0	FROM->TO	G17_109	HURON (BD KU2A) 345/230/13.8KV TRANSFORMER CKT 1	392.9	0.05336	107.1456	FTTHOM1-LNX3345.00 - G16-017-TAP 345.00 345KV CKT 1
17G	16NR	0	FROM->TO	G17_109	HURON (BD KU2A) 345/230/13.8KV TRANSFORMER CKT 1	387	0.05856	106.9869	G09_001IST 345.00 - GROTON 345KV CKT 1
17G	16NR	0	FROM->TO	G17_109	HURON (BD KU2A) 345/230/13.8KV TRANSFORMER CKT 1	395.4	0.05756	106.2264	BUFFALO - JAMESTOWN 345KV CKT 1
20L	16NR	0	FROM->TO	G17_109	HURON (BD KU2A) 345/230/13.8KV TRANSFORMER CKT 1	397.6	0.05336	105.9797	FT THOMPSON - FTTHOM1-LNX3345.00 345KV CKT Z
20L	16NR	0	FROM->TO	G17_109	HURON (BD KU2A) 345/230/13.8KV TRANSFORMER CKT 1	397.6	0.05336	105.9797	FTTHOM1-LNX3345.00 - G16-017-TAP 345.00 345KV CKT 1
17G	16NR	0	FROM->TO	G17_109	HURON (BD KU2A) 345/230/13.8KV TRANSFORMER CKT 1	387	0.07735	105.7757	BISON - HETINGER 230KV CKT 1
17G	16NR	0	FROM->TO	G17_109	HURON (BD KU2A) 345/230/13.8KV TRANSFORMER CKT 1	395.4	0.05856	105.7004	G09_001IST 345.00 - WATERTOWN 345KV CKT 1
20L	16NR	0	FROM->TO	G17_109	HURON (BD KU2A) 345/230/13.8KV TRANSFORMER CKT 1	392.9	0.05336	105.4913	P12:345:UMZB:# 108 #: LOS FT IN ND. LOS FT
17G	16NR	0	FROM->TO	G17_109	HURON (BD KU2A) 345/230/13.8KV TRANSFORMER CKT 1	387	0.07735	105.2589	BISON - MAURINE 230KV CKT 1
20L	16NR	0	FROM->TO	G17_109	HURON (BD KU2A) 345/230/13.8KV TRANSFORMER CKT 1	392.9	0.05336	105.1349	LELAND OLDS - LELAND2-LNX3345.00 345KV CKT Z
17G	16NR	0	FROM->TO	G17_109	HURON (BD KU2A) 345/230/13.8KV TRANSFORMER CKT 1	395.4	0.05856	104.8405	G09_001IST 345.00 - GROTON 345KV CKT 1
17G	16NR	0	FROM->TO	G17_109	HURON (BD KU2A) 345/230/13.8KV TRANSFORMER CKT 1	387	0.05762	104.7645	CENTER - JAMESTOWN 345KV CKT 1
17SP	16ALL	0	FROM->TO	G17_109	HURON (BD KU2A) 345/230/13.8KV TRANSFORMER CKT 1	394.5	0.12106	104.5465	System Intact
20L	16NR	0	FROM->TO	G17_109	HURON (BD KU2A) 345/230/13.8KV TRANSFORMER CKT 1	392.9	0.05336	104.4986	G16-017-TAP 345.00 - LELAND2-LNX3345.00 345KV CKT 1
17G	16NR	0	FROM->TO	G17_109	HURON (BD KU2A) 345/230/13.8KV TRANSFORMER CKT 1	387	0.05674	104.3816	BISON 3 345.00 - BUFFALO 345KV CKT 1
20L	16NR	0	FROM->TO	G17_109	HURON (BD KU2A) 345/230/13.8KV TRANSFORMER CKT 1	397.6	0.05336	104.37	P12:345:UMZB:# 108 #: LOS FT IN ND. LOS FT
20L	16NR	0	FROM->TO	G17_109	HURON (BD KU2A) 345/230/13.8KV TRANSFORMER CKT 1	397.6	0.05336	103.9928	LELAND OLDS - LELAND2-LNX3345.00 345KV CKT Z
17SP	00NR	0	FROM->TO	G17_109	HURON (BD KU2A) 345/230/13.8KV TRANSFORMER CKT 1	395.3	0.06672	103.782	RIEL - ROSEAU 500KV CKT 1
17G	16NR	0	FROM->TO	G17_109	HURON (BD KU2A) 345/230/13.8KV TRANSFORMER CKT 1	395.4	0.07735	103.6803	BISON - HETINGER 230KV CKT 1
17SP	00NR	0	FROM->TO	G17_109	HURON (BD KU2A) 345/230/13.8KV TRANSFORMER CKT 1	395.3	0.07992	103.611	FT THOMPSON - FTTHOM1-LNX3345.00 345KV CKT Z
17SP	00NR	0	FROM->TO	G17_109	HURON (BD KU2A) 345/230/13.8KV TRANSFORMER CKT 1	395.3	0.07992	103.611	FTTHOM1-LNX3345.00 - G16-017-TAP 345.00 345KV CKT 1
25SP	16ALL	0	FROM->TO	G17_109	HURON (BD KU2A) 345/230/13.8KV TRANSFORMER CKT 1	386.2	0.119	103.4252	System Intact
20L	16NR	0	FROM->TO	G17_109	HURON (BD KU2A) 345/230/13.8KV TRANSFORMER CKT 1	397.6	0.05336	103.3891	G16-017-TAP 345.00 - LELAND2-LNX3345.00 345KV CKT 1
17SP	00NR	0	FROM->TO	G17_109	HURON (BD KU2A) 345/230/13.8KV TRANSFORMER CKT 1	395.3	0.06672	103.3267	ROSEAU - ROSEAUM 2 500.00 500KV CKT 1
17SP	00NR	0	FROM->TO	G17_109	HURON (BD KU2A) 345/230/13.8KV TRANSFORMER CKT 1	395.3	0.06672	103.3267	ROSEAU - ROSEAUM 2 500.00 500KV CKT 1
17G	16NR	0	FROM->TO	G17_109	HURON (BD KU2A) 345/230/13.8KV TRANSFORMER CKT 1	395.4	0.07735	103.1745	BISON - MAURINE 230KV CKT 1
17SP	00NR	0	FROM->TO	G17_109	HURON (BD KU2A) 345/230/13.8KV TRANSFORMER CKT 1	398.9	0.06672	102.9457	RIEL - ROSEAU 500KV CKT 1
17SP	00NR	0	FROM->TO	G17_109	HURON (BD KU2A) 345/230/13.8KV TRANSFORMER CKT 1	395.3	0.07469	102.8841	LELAND OLDS - LELAND1-LNX3345.00 345KV CKT Z
17SP	00NR	0	FROM->TO	G17_109	HURON (BD KU2A) 345/230/13.8KV TRANSFORMER CKT 1	395.3	0.06672	102.8713	FORBES - ROSEAU 500KV CKT 1
17SP	00NR	0	FROM->TO	G17_109	HURON (BD KU2A) 345/230/13.8KV TRANSFORMER CKT 1	395.3	0.07469	102.8082	P12:345:UMZB:# 109 #: LOS GRT IN ND. LOS GRT
17SP	00NR	0	FROM->TO	G17_109	HURON (BD KU2A) 345/230/13.8KV TRANSFORMER CKT 1	398.9	0.07992	102.7762	FT THOMPSON - FTTHOM1-LNX3345.00 345KV CKT Z
17SP	00NR	0	FROM->TO	G17_109	HURON (BD KU2A) 345/230/13.8KV TRANSFORMER CKT 1	398.9	0.07992	102.7762	FTTHOM1-LNX3345.00 - G16-017-TAP 345.00 345KV CKT 1
17G	16NR	0	FROM->TO	G17_109	HURON (BD KU2A) 345/230/13.8KV TRANSFORMER CKT 1	395.4	0.05762	102.6653	CENTER - JAMESTOWN 345KV CKT 1
17SP	00NR	0	FROM->TO	G17_109	HURON (BD KU2A) 345/230/13.8KV TRANSFORMER CKT 1	398.9	0.06672	102.4945	ROSEAU - ROSEAUM 2 500.00 500KV CKT 1
17SP	00NR	0	FROM->TO	G17_109	HURON (BD KU2A) 345/230/13.8KV TRANSFORMER CKT 1	398.9	0.06672	102.4945	ROSEAU - ROSEAUM 2 500.00 500KV CKT 1
17SP	00NR	0	FROM->TO	G17_109	HURON (BD KU2A) 345/230/13.8KV TRANSFORMER CKT 1	395.3	0.07469	102.3276	GROTON - GROTON-LNX3 345.00 345KV CKT Z
17SP	00NR	0	FROM->TO	G17_109	HURON (BD KU2A) 345/230/13.8KV TRANSFORMER CKT 1	395.3	0.07469	102.3276	GROTON-LNX3 345.00 - LELAND1-LNX3345.00 345KV CKT 1
17G	16NR	0	FROM->TO	G17_109	HURON (BD KU2A) 345/230/13.8KV TRANSFORMER CKT 1	395.4	0.05674	102.3158	BISON 3 345.00 - BUFFALO 345KV CKT 1
17SP	00NR	0	FROM->TO	G17_109	HURON (BD KU2A) 345/230/13.8KV TRANSFORMER CKT 1	398.9	0.06672	102.0683	FORBES - ROSEAU 500KV CKT 1
17SP	00NR	0	FROM->TO	G17_109	HURON (BD KU2A) 345/230/13.8KV TRANSFORMER CKT 1	398.9	0.07469	102.0559	LELAND OLDS - LELAND1-LNX3345.00 345KV CKT Z
17SP	00NR	0	FROM->TO	G17_109	HURON (BD KU2A) 345/230/13.8KV TRANSFORMER CKT 1	398.9	0.07469	101.9806	P12:345:UMZB:# 109 #: LOS GRT IN ND. LOS GRT
17SP	00NR	0	FROM->TO	G17_109	HURON (BD KU2A) 345/230/13.8KV TRANSFORMER CKT 1	395.3	0.07992	101.7137	P12:345:UMZB:# 108 #: LOS FT IN ND. LOS FT
17SP	00NR	0	FROM->TO	G17_109	HURON (BD KU2A) 345/230/13.8KV TRANSFORMER CKT 1	398.9	0.07469	101.5043	GROTON - GROTON-LNX3 345.00 345KV CKT Z
17SP	00NR	0	FROM->TO	G17_109	HURON (BD KU2A) 345/230/13.8KV TRANSFORMER CKT 1	398.9	0.07469	101.5043	GROTON-LNX3 345.00 - LELAND1-LNX3345.00 345KV CKT 1
20L	16NR	0	FROM->TO	G17_109	HURON (BD KU2A) 345/230/13.8KV TRANSFORMER CKT 1	392.9	0.04965	101.4732	LELAND OLDS - LELAND1-LNX3345.00 345KV CKT Z
20L	16NR	0	FROM->TO	G17_109	HURON (BD KU2A) 345/230/13.8KV TRANSFORMER CKT 1	392.9	0.04965	101.3968	P12:345:UMZB:# 109 #: LOS GRT IN ND. LOS GRT
17SP	00NR	0	FROM->TO	G17_109	HURON (BD KU2A) 345/230/13.8KV TRANSFORMER CKT 1	395.3	0.07992	101.2584	LELAND OLDS - LELAND2-LNX3345.00 345KV CKT Z

SEASON	GROUP	SCENARIO	DIRECTION	SOURCE	MONITORED ELEMENT	RATE (MVA)	TDF	CONTINGENCY LOADING %	CONTINGENCY
25SP	16ALL	0	FROM->TO	G17_109	HURON (BD KU2A) 345/230/13.8KV TRANSFORMER CKT 1	395	0.119	101.2476	System Intact
20L	16NR	0	FROM->TO	G17_109	HURON (BD KU2A) 345/230/13.8KV TRANSFORMER CKT 1	392.9	0.04965	101.015	GROTON - GROTON-LNX3 345.00 345KV CKT Z
20L	16NR	0	FROM->TO	G17_109	HURON (BD KU2A) 345/230/13.8KV TRANSFORMER CKT 1	392.9	0.04965	101.015	GROTON-LNX3 345.00 - LELAND1-LNX3345.00 345KV CKT 1
17SP	00NR	0	FROM->TO	G17_109	HURON (BD KU2A) 345/230/13.8KV TRANSFORMER CKT 1	398.9	0.07992	100.8961	P12:345:UMZB:# 108 #: LOS FT IN ND. LOS FT
17SP	00NR	0	FROM->TO	G17_109	HURON (BD KU2A) 345/230/13.8KV TRANSFORMER CKT 1	395.3	0.07992	100.8789	G16-017-TAP 345.00 - LELAND2-LNX3345.00 345KV CKT 1
20SP	16ALL	0	FROM->TO	G17_109	HURON (BD KU2A) 345/230/13.8KV TRANSFORMER CKT 1	387.8	0.11871	100.5952	System Intact
17SP	00NR	0	FROM->TO	G17_109	HURON (BD KU2A) 345/230/13.8KV TRANSFORMER CKT 1	398.9	0.07992	100.4448	LELAND OLDS - LELAND2-LNX3345.00 345KV CKT Z
20L	16NR	0	FROM->TO	G17_109	HURON (BD KU2A) 345/230/13.8KV TRANSFORMER CKT 1	397.6	0.04965	100.3742	LELAND OLDS - LELAND1-LNX3345.00 345KV CKT Z
20L	16NR	0	FROM->TO	G17_109	HURON (BD KU2A) 345/230/13.8KV TRANSFORMER CKT 1	397.6	0.04965	100.2988	P12:345:UMZB:# 109 #: LOS GRT IN ND. LOS GRT
17G	16ALL	0	FROM->TO	G17_109	HURON (BD KU2A) 345/230/13.8KV TRANSFORMER CKT 1	387.4	0.11827	100.1859	System Intact
17SP	00NR	0	FROM->TO	G17_109	HURON (BD KU2A) 345/230/13.8KV TRANSFORMER CKT 1	398.9	0.07992	100.0688	G16-017-TAP 345.00 - LELAND2-LNX3345.00 345KV CKT 1
20L	16NR	0	FROM->TO	G17_109	MAURINE (MA KV1A) 230/115/13.8KV TRANSFORMER CKT 1	124.8	0.08162	111.6333	MAURINE - NUNDRWD-LNX3230.00 230KV CKT 1
20L	16NR	0	FROM->TO	G17_109	MAURINE (MA KV1A) 230/115/13.8KV TRANSFORMER CKT 1	124.8	0.08162	111.6333	NUNDRWD - NUNDRWD-LNX3230.00 230KV CKT Z
20L	16NR	0	FROM->TO	G17_109	MAURINE (MA KV1A) 230/115/13.8KV TRANSFORMER CKT 1	124.9	0.08162	111.624	MAURINE - NUNDRWD-LNX3230.00 230KV CKT 1
20L	16NR	0	FROM->TO	G17_109	MAURINE (MA KV1A) 230/115/13.8KV TRANSFORMER CKT 1	124.9	0.08162	111.624	NUNDRWD - NUNDRWD-LNX3230.00 230KV CKT Z
17G	16ALL	0	TO->FROM	G17_109	POPLAR - WOLF POINT 115KV CKT 1	120.7	0.55586	209.9619	DAWSON CREEK - G17109_T(P) 230.00 230KV CKT 1
17SP	16ALL	0	TO->FROM	G17_109	POPLAR - WOLF POINT 115KV CKT 1	120.7	0.55707	208.623	DAWSON CREEK - G17109_T(P) 230.00 230KV CKT 1
17G	16NR	0	TO->FROM	G17_109	POPLAR - WOLF POINT 115KV CKT 1	120.6	0.54402	203.803	DAWSON CREEK - G17109_T(P) 230.00 230KV CKT 1
17SP	00NR	0	TO->FROM	G17_109	POPLAR - WOLF POINT 115KV CKT 1	120.7	0.54803	195.5838	DAWSON CREEK - G17109_T(P) 230.00 230KV CKT 1
16WP	16ALL	0	TO->FROM	G17_109	POPLAR - WOLF POINT 115KV CKT 1	131.9	0.55636	191.53	DAWSON CREEK - G17109_T(P) 230.00 230KV CKT 1
16WP	00NR	0	TO->FROM	G17_109	POPLAR - WOLF POINT 115KV CKT 1	131.9	0.54807	184.5204	DAWSON CREEK - G17109_T(P) 230.00 230KV CKT 1
20SP	16ALL	0	TO->FROM	G17_109	POPLAR - WOLF POINT 115KV CKT 1	120.7	0.55737	182.1177	DAWSON CREEK - G17109_T(P) 230.00 230KV CKT 1
25SP	16ALL	0	TO->FROM	G17_109	POPLAR - WOLF POINT 115KV CKT 1	120.7	0.55747	177.1798	DAWSON CREEK - G17109_T(P) 230.00 230KV CKT 1
20SP	00NR	0	TO->FROM	G17_109	POPLAR - WOLF POINT 115KV CKT 1	120.7	0.54924	171.6295	DAWSON CREEK - G17109_T(P) 230.00 230KV CKT 1
25SP	00NR	0	TO->FROM	G17_109	POPLAR - WOLF POINT 115KV CKT 1	120.6	0.54926	170.2017	DAWSON CREEK - G17109_T(P) 230.00 230KV CKT 1
20L	16ALL	0	TO->FROM	G17_109	POPLAR - WOLF POINT 115KV CKT 1	120.7	0.55381	167.9304	DAWSON CREEK - G17109_T(P) 230.00 230KV CKT 1
20WP	16ALL	0	TO->FROM	G17_109	POPLAR - WOLF POINT 115KV CKT 1	132	0.55681	165.0697	DAWSON CREEK - G17109_T(P) 230.00 230KV CKT 1
20L	16NR	0	TO->FROM	G17_109	POPLAR - WOLF POINT 115KV CKT 1	120.7	0.54803	163.2722	DAWSON CREEK - G17109_T(P) 230.00 230KV CKT 1
20WP	00NR	0	TO->FROM	G17_109	POPLAR - WOLF POINT 115KV CKT 1	132	0.55296	153.9751	DAWSON CREEK - G17109_T(P) 230.00 230KV CKT 1
17SP	00NR	0	TO->FROM	G17_109	SCOTTSBLUFF - VICTORY HILL 115KV CKT 1	119.1	0.03209	104.8437	P13:230-345:NPPD:STEGALL3:KV3A
17SP	00NR	0	TO->FROM	G17_109	SCOTTSBLUFF - VICTORY HILL 115KV CKT 1	119.1	0.03209	104.8437	STEGALL - STEGALL TRANSFORMER 230KV CKT 1
17SP	00NR	0	TO->FROM	G17_109	SCOTTSBLUFF - VICTORY HILL 115KV CKT 1	119.1	0.03209	104.7597	STEGALL (SGQ KV3A) 345/230/13.8KV TRANSFORMER CKT 1
20L	16NR	0	TO->FROM	G17_109	SPLIT ROCK - WHITE 345KV CKT 1	706.6	0.04373	105.5043	H081_SUB 345.00 - LYON COUNTY 345KV CKT 1
20L	16NR	0	TO->FROM	G17_109	SPLIT ROCK - WHITE 345KV CKT 1	706.6	0.04373	103.6787	H081_SUB 345.00 - J460 POI 345.00 345KV CKT 1
20L	16NR	0	TO->FROM	G17_109	SPLIT ROCK - WHITE 345KV CKT 1	706.6	0.04373	101.754	BROOKING COUNTY - J460 POI 345.00 345KV CKT 1
25SP	16ALL	2	FROM->TO	G17_109	BELFIELD - DICKINSON 230KV CKT 1	263.9	0.29758	108.097	BOWMAN - RHAME 4 230.00 230KV CKT 1
17SP	16ALL	2	FROM->TO	G17_109	BELFIELD - DICKINSON 230KV CKT 1	263.4	0.43657	106.6044	BELFIELD - CHARLIE CREEK 345KV CKT 1
16WP	16ALL	2	FROM->TO	G17_109	BELFIELD - DICKINSON 230KV CKT 1	263.8	0.43612	106.2608	BELFIELD - CHARLIE CREEK 345KV CKT 1
17G	16ALL	2	FROM->TO	G17_109	BELFIELD - DICKINSON 230KV CKT 1	262.7	0.43638	106.1698	BELFIELD - CHARLIE CREEK 345KV CKT 1
17SP	16ALL	2	FROM->TO	G17_109	BELFIELD - DICKINSON 230KV CKT 1	263.4	0.29875	105.4427	BOWMAN - RHAME 4 230.00 230KV CKT 1
20SP	16ALL	2	FROM->TO	G17_109	BELFIELD - DICKINSON 230KV CKT 1	263.9	0.29729	105.1732	BOWMAN - RHAME 4 230.00 230KV CKT 1
17G	16NR	2	FROM->TO	G17_109	BEULAH - STANTONTAP 7115.00 115KV CKT 1	121	0.04535	106.8694	CENTER - COYOTE 345KV CKT 1
16WP	00NR	2	FROM->TO	G17_109	BEULAH - STANTONTAP 7115.00 115KV CKT 1	132	0.04242	105.2079	CENTER - COYOTE 345KV CKT 1
20WP	00NR	2	FROM->TO	G17_109	BEULAH - STANTONTAP 7115.00 115KV CKT 1	132	0.03987	103.8321	CENTER - COYOTE 345KV CKT 1
17SP	16ALL	2	FROM->TO	G17_109	CIRCLE - DAWSON CREEK 115KV CKT 1	77.7	0.43912	278.3321	DAWSON CREEK - G17109_T(P) 230.00 230KV CKT 1
17SP	00NR	2	FROM->TO	G17_109	CIRCLE - DAWSON CREEK 115KV CKT 1	77.5	0.42842	276.6379	DAWSON CREEK - G17109_T(P) 230.00 230KV CKT 1
17G	16NR	2	FROM->TO	G17_109	CIRCLE - DAWSON CREEK 115KV CKT 1	77.8	0.42703	272.1717	DAWSON CREEK - G17109_T(P) 230.00 230KV CKT 1
17G	16ALL	2	FROM->TO	G17_109	CIRCLE - DAWSON CREEK 115KV CKT 1	78.7	0.43827	269.7942	DAWSON CREEK - G17109_T(P) 230.00 230KV CKT 1
25SP	16ALL	2	FROM->TO	G17_109	CIRCLE - DAWSON CREEK 115KV CKT 1	78.1	0.43911	249.7772	DAWSON CREEK - G17109_T(P) 230.00 230KV CKT 1
20SP	16ALL	2	FROM->TO	G17_109	CIRCLE - DAWSON CREEK 115KV CKT 1	78.5	0.43899	241.9465	DAWSON CREEK - G17109_T(P) 230.00 230KV CKT 1
25SP	00NR	2	FROM->TO	G17_109	CIRCLE - DAWSON CREEK 115KV CKT 1	78.1	0.42835	241.1934	DAWSON CREEK - G17109_T(P) 230.00 230KV CKT 1
20SP	00NR	2	FROM->TO	G17_109	CIRCLE - DAWSON CREEK 115KV CKT 1	78.3	0.42832	239.7987	DAWSON CREEK - G17109_T(P) 230.00 230KV CKT 1
20L	16ALL	2	FROM->TO	G17_109	CIRCLE - DAWSON CREEK 115KV CKT 1	78.7	0.43619	235.2071	DAWSON CREEK - G17109_T(P) 230.00 230KV CKT 1

SEASON	GROUP	SCENARIO	DIRECTION	SOURCE	MONITORED ELEMENT	RATE (MVA)	TDF	CONTINGENCY LOADING %	CONTINGENCY
20L	16NR	2	FROM->TO	G17_109	CIRCLE - DAWSON CREEK 115KV CKT 1	78.7	0.42959	235.0302	DAWSON CREEK - G17109_T(P) 230.00 230KV CKT 1
16WP	16ALL	2	FROM->TO	G17_109	CIRCLE - DAWSON CREEK 115KV CKT 1	86.9	0.43854	234.2186	DAWSON CREEK - G17109_T(P) 230.00 230KV CKT 1
16WP	00NR	2	FROM->TO	G17_109	CIRCLE - DAWSON CREEK 115KV CKT 1	87.3	0.42847	216.0486	DAWSON CREEK - G17109_T(P) 230.00 230KV CKT 1
20WP	16ALL	2	FROM->TO	G17_109	CIRCLE - DAWSON CREEK 115KV CKT 1	87.4	0.43838	202.6133	DAWSON CREEK - G17109_T(P) 230.00 230KV CKT 1
20WP	00NR	2	FROM->TO	G17_109	CIRCLE - DAWSON CREEK 115KV CKT 1	87.3	0.42462	196.3097	DAWSON CREEK - G17109_T(P) 230.00 230KV CKT 1
17SP	16ALL	2	TO->FROM	G17_109	CIRCLE - G12_012IST 115.00 115KV CKT 1	77.2	0.43912	298.7876	DAWSON CREEK - G17109_T(P) 230.00 230KV CKT 1
17G	16ALL	2	TO->FROM	G17_109	CIRCLE - G12_012IST 115.00 115KV CKT 1	76.7	0.43827	297.8201	DAWSON CREEK - G17109_T(P) 230.00 230KV CKT 1
17SP	00NR	2	TO->FROM	G17_109	CIRCLE - G12_012IST 115.00 115KV CKT 1	77	0.42842	297.5252	DAWSON CREEK - G17109_T(P) 230.00 230KV CKT 1
25SP	16ALL	2	TO->FROM	G17_109	CIRCLE - G12_012IST 115.00 115KV CKT 1	77.2	0.43911	296.342	DAWSON CREEK - G17109_T(P) 230.00 230KV CKT 1
17G	16NR	2	TO->FROM	G17_109	CIRCLE - G12_012IST 115.00 115KV CKT 1	77.4	0.42703	294.7669	DAWSON CREEK - G17109_T(P) 230.00 230KV CKT 1
25SP	00NR	2	TO->FROM	G17_109	CIRCLE - G12_012IST 115.00 115KV CKT 1	77.2	0.42835	287.5285	DAWSON CREEK - G17109_T(P) 230.00 230KV CKT 1
20SP	16ALL	2	TO->FROM	G17_109	CIRCLE - G12_012IST 115.00 115KV CKT 1	77.5	0.43899	287.52	DAWSON CREEK - G17109_T(P) 230.00 230KV CKT 1
20SP	00NR	2	TO->FROM	G17_109	CIRCLE - G12_012IST 115.00 115KV CKT 1	77.4	0.42832	285.3519	DAWSON CREEK - G17109_T(P) 230.00 230KV CKT 1
20L	16NR	2	TO->FROM	G17_109	CIRCLE - G12_012IST 115.00 115KV CKT 1	77.2	0.42959	270.5555	DAWSON CREEK - G17109_T(P) 230.00 230KV CKT 1
20L	16ALL	2	TO->FROM	G17_109	CIRCLE - G12_012IST 115.00 115KV CKT 1	77.3	0.43619	270.1267	DAWSON CREEK - G17109_T(P) 230.00 230KV CKT 1
16WP	16ALL	2	TO->FROM	G17_109	CIRCLE - G12_012IST 115.00 115KV CKT 1	86.5	0.43854	259.0012	DAWSON CREEK - G17109_T(P) 230.00 230KV CKT 1
20WP	16ALL	2	TO->FROM	G17_109	CIRCLE - G12_012IST 115.00 115KV CKT 1	86.9	0.43838	251.3049	DAWSON CREEK - G17109_T(P) 230.00 230KV CKT 1
20WP	00NR	2	TO->FROM	G17_109	CIRCLE - G12_012IST 115.00 115KV CKT 1	86.9	0.42462	244.9694	DAWSON CREEK - G17109_T(P) 230.00 230KV CKT 1
16WP	00NR	2	TO->FROM	G17_109	CIRCLE - G12_012IST 115.00 115KV CKT 1	86.7	0.42847	240.2657	DAWSON CREEK - G17109_T(P) 230.00 230KV CKT 1
17G	16NR	2	TO->FROM	G17_109	CIRCLE - G12_012IST 115.00 115KV CKT 1	77.4	0.03822	116.0599	CULBERTSN E7115.00 - WILISTON 115KV CKT 1
17SP	00NR	2	TO->FROM	G17_109	CIRCLE - G12_012IST 115.00 115KV CKT 1	77	0.03946	116.0093	CULBERTSN E7115.00 - WILISTON 115KV CKT 1
20SP	00NR	2	TO->FROM	G17_109	CIRCLE - G12_012IST 115.00 115KV CKT 1	77.4	0.03973	114.4879	CULBERTSN E7115.00 - WILISTON 115KV CKT 1
25SP	00NR	2	TO->FROM	G17_109	CIRCLE - G12_012IST 115.00 115KV CKT 1	77.2	0.03974	113.7523	CULBERTSN E7115.00 - WILISTON 115KV CKT 1
20WP	00NR	2	TO->FROM	G17_109	CIRCLE - G12_012IST 115.00 115KV CKT 1	86.9	0.03082	106.9763	CULBERTSN E7115.00 - WILISTON 115KV CKT 1
20L	16NR	2	TO->FROM	G17_109	CIRCLE - G12_012IST 115.00 115KV CKT 1	77.2	0.04032	104.4073	CULBERTSN E7115.00 - WILISTON 115KV CKT 1
17SP	13ALL	2	TO->FROM	G17_109	CIRCLE - G12_012IST 115.00 115KV CKT 1	78.4	0.43926	102.8229	DAWSON CREEK - G17109_T(P) 230.00 230KV CKT 1
25SP	13ALL	2	TO->FROM	G17_109	CIRCLE - G12_012IST 115.00 115KV CKT 1	78.3	0.43921	101.469	DAWSON CREEK - G17109_T(P) 230.00 230KV CKT 1
16WP	00NR	2	FROM->TO	G17_109	COALHILL4 230.00 - FT PECK 230KV CKT 1	174.7	1	182.8849	DAWSON CREEK - G17109_T(P) 230.00 230KV CKT 1
16WP	16ALL	2	FROM->TO	G17_109	COALHILL4 230.00 - FT PECK 230KV CKT 1	175.1	1	182.2958	DAWSON CREEK - G17109_T(P) 230.00 230KV CKT 1
17SP	00NR	2	FROM->TO	G17_109	COALHILL4 230.00 - FT PECK 230KV CKT 1	175.2	1	182.0776	DAWSON CREEK - G17109_T(P) 230.00 230KV CKT 1
17SP	16ALL	2	FROM->TO	G17_109	COALHILL4 230.00 - FT PECK 230KV CKT 1	175.5	1	181.7664	DAWSON CREEK - G17109_T(P) 230.00 230KV CKT 1
17G	16NR	2	FROM->TO	G17_109	COALHILL4 230.00 - FT PECK 230KV CKT 1	175.5	1	181.7664	DAWSON CREEK - G17109_T(P) 230.00 230KV CKT 1
17G	16ALL	2	FROM->TO	G17_109	COALHILL4 230.00 - FT PECK 230KV CKT 1	175.7	1	181.6164	DAWSON CREEK - G17109_T(P) 230.00 230KV CKT 1
20L	16NR	2	FROM->TO	G17_109	COALHILL4 230.00 - FT PECK 230KV CKT 1	175.8	1	174.1183	DAWSON CREEK - G17109_T(P) 230.00 230KV CKT 1
20L	16ALL	2	FROM->TO	G17_109	COALHILL4 230.00 - FT PECK 230KV CKT 1	175.9	1	174.0193	DAWSON CREEK - G17109_T(P) 230.00 230KV CKT 1
25SP	00NR	2	FROM->TO	G17_109	COALHILL4 230.00 - FT PECK 230KV CKT 1	175.7	1	170.7456	DAWSON CREEK - G17109_T(P) 230.00 230KV CKT 1
20WP	00NR	2	FROM->TO	G17_109	COALHILL4 230.00 - FT PECK 230KV CKT 1	175.6	1	170.7289	DAWSON CREEK - G17109_T(P) 230.00 230KV CKT 1
20SP	00NR	2	FROM->TO	G17_109	COALHILL4 230.00 - FT PECK 230KV CKT 1	175.8	1	170.6485	DAWSON CREEK - G17109_T(P) 230.00 230KV CKT 1
20WP	16ALL	2	FROM->TO	G17_109	COALHILL4 230.00 - FT PECK 230KV CKT 1	175.7	1	170.6318	DAWSON CREEK - G17109_T(P) 230.00 230KV CKT 1
25SP	16ALL	2	FROM->TO	G17_109	COALHILL4 230.00 - FT PECK 230KV CKT 1	175.8	1	170.5916	DAWSON CREEK - G17109_T(P) 230.00 230KV CKT 1
20SP	16ALL	2	FROM->TO	G17_109	COALHILL4 230.00 - FT PECK 230KV CKT 1	175.9	1	170.5515	DAWSON CREEK - G17109_T(P) 230.00 230KV CKT 1
16WP	00NR	2	TO->FROM	G17_109	COALHILL4 230.00 - G17109_T(P) 230.00 230KV CKT 1	174.7	1	182.8849	DAWSON CREEK - G17109_T(P) 230.00 230KV CKT 1
20WP	00NR	2	TO->FROM	G17_109	COALHILL4 230.00 - G17109_T(P) 230.00 230KV CKT 1	175	1	182.6857	DAWSON CREEK - G17109_T(P) 230.00 230KV CKT 1
20WP	16ALL	2	TO->FROM	G17_109	COALHILL4 230.00 - G17109_T(P) 230.00 230KV CKT 1	175.1	1	182.5243	DAWSON CREEK - G17109_T(P) 230.00 230KV CKT 1
25SP	00NR	2	TO->FROM	G17_109	COALHILL4 230.00 - G17109_T(P) 230.00 230KV CKT 1	175.2	1	182.363	DAWSON CREEK - G17109_T(P) 230.00 230KV CKT 1
16WP	16ALL	2	TO->FROM	G17_109	COALHILL4 230.00 - G17109_T(P) 230.00 230KV CKT 1	175.1	1	182.2958	DAWSON CREEK - G17109_T(P) 230.00 230KV CKT 1
20SP	00NR	2	TO->FROM	G17_109	COALHILL4 230.00 - G17109_T(P) 230.00 230KV CKT 1	175.3	1	182.259	DAWSON CREEK - G17109_T(P) 230.00 230KV CKT 1
25SP	16ALL	2	TO->FROM	G17_109	COALHILL4 230.00 - G17109_T(P) 230.00 230KV CKT 1	175.3	1	182.2019	DAWSON CREEK - G17109_T(P) 230.00 230KV CKT 1
17SP	00NR	2	TO->FROM	G17_109	COALHILL4 230.00 - G17109_T(P) 230.00 230KV CKT 1	175.2	1	182.0776	DAWSON CREEK - G17109_T(P) 230.00 230KV CKT 1
20L	16ALL	2	TO->FROM	G17_109	COALHILL4 230.00 - G17109_T(P) 230.00 230KV CKT 1	175.6	1	182.0615	DAWSON CREEK - G17109_T(P) 230.00 230KV CKT 1
20L	16NR	2	TO->FROM	G17_109	COALHILL4 230.00 - G17109_T(P) 230.00 230KV CKT 1	175.6	1	182.0615	DAWSON CREEK - G17109_T(P) 230.00 230KV CKT 1
20SP	16ALL	2	TO->FROM	G17_109	COALHILL4 230.00 - G17109_T(P) 230.00 230KV CKT 1	175.5	1	182.0513	DAWSON CREEK - G17109_T(P) 230.00 230KV CKT 1
17SP	16ALL	2	TO->FROM	G17_109	COALHILL4 230.00 - G17109_T(P) 230.00 230KV CKT 1	175.5	1	181.7664	DAWSON CREEK - G17109_T(P) 230.00 230KV CKT 1

SEASON	GROUP	SCENARIO	DIRECTION	SOURCE	MONITORED ELEMENT	RATE (MVA)	TDF	CONTINGENCY LOADING %	CONTINGENCY
17G	16NR	2	TO->FROM	G17_109	COALHILL4 230.00 - G17109_T(P) 230.00 230KV CKT 1	175.5	1	181.7664	DAWSON CREEK - G17109_T(P) 230.00 230KV CKT 1
17G	16ALL	2	TO->FROM	G17_109	COALHILL4 230.00 - G17109_T(P) 230.00 230KV CKT 1	175.7	1	181.6164	DAWSON CREEK - G17109_T(P) 230.00 230KV CKT 1
17G	16ALL	2	TO->FROM	G17_109	CULBERTSN E7115.00 - CULBERTSON 115KV CKT 1	127.9	0.55585	177.3417	DAWSON CREEK - G17109_T(P) 230.00 230KV CKT 1
17SP	16ALL	2	TO->FROM	G17_109	CULBERTSN E7115.00 - CULBERTSON 115KV CKT 1	127.7	0.55707	172.2067	DAWSON CREEK - G17109_T(P) 230.00 230KV CKT 1
17G	16NR	2	TO->FROM	G17_109	CULBERTSN E7115.00 - CULBERTSON 115KV CKT 1	127.7	0.54401	171.9524	DAWSON CREEK - G17109_T(P) 230.00 230KV CKT 1
16WP	16ALL	2	TO->FROM	G17_109	CULBERTSN E7115.00 - CULBERTSON 115KV CKT 1	131.6	0.55636	165.6717	DAWSON CREEK - G17109_T(P) 230.00 230KV CKT 1
17SP	00NR	2	TO->FROM	G17_109	CULBERTSN E7115.00 - CULBERTSON 115KV CKT 1	127.8	0.54802	160.0676	DAWSON CREEK - G17109_T(P) 230.00 230KV CKT 1
16WP	00NR	2	TO->FROM	G17_109	CULBERTSN E7115.00 - CULBERTSON 115KV CKT 1	131.4	0.54807	158.8146	DAWSON CREEK - G17109_T(P) 230.00 230KV CKT 1
20SP	16ALL	2	TO->FROM	G17_109	CULBERTSN E7115.00 - CULBERTSON 115KV CKT 1	127.9	0.55737	147.5497	DAWSON CREEK - G17109_T(P) 230.00 230KV CKT 1
20L	16ALL	2	TO->FROM	G17_109	CULBERTSN E7115.00 - CULBERTSON 115KV CKT 1	128	0.5538	143.975	DAWSON CREEK - G17109_T(P) 230.00 230KV CKT 1
25SP	16ALL	2	TO->FROM	G17_109	CULBERTSN E7115.00 - CULBERTSON 115KV CKT 1	128	0.55747	141.8406	DAWSON CREEK - G17109_T(P) 230.00 230KV CKT 1
20WP	16ALL	2	TO->FROM	G17_109	CULBERTSN E7115.00 - CULBERTSON 115KV CKT 1	131.9	0.55681	140.0243	DAWSON CREEK - G17109_T(P) 230.00 230KV CKT 1
20L	16NR	2	TO->FROM	G17_109	CULBERTSN E7115.00 - CULBERTSON 115KV CKT 1	128	0.54802	139.505	DAWSON CREEK - G17109_T(P) 230.00 230KV CKT 1
20SP	00NR	2	TO->FROM	G17_109	CULBERTSN E7115.00 - CULBERTSON 115KV CKT 1	128	0.54923	137.4637	DAWSON CREEK - G17109_T(P) 230.00 230KV CKT 1
25SP	00NR	2	TO->FROM	G17_109	CULBERTSN E7115.00 - CULBERTSON 115KV CKT 1	128	0.54925	135.0469	DAWSON CREEK - G17109_T(P) 230.00 230KV CKT 1
20WP	00NR	2	TO->FROM	G17_109	CULBERTSN E7115.00 - CULBERTSON 115KV CKT 1	132	0.55296	128.7479	DAWSON CREEK - G17109_T(P) 230.00 230KV CKT 1
17G	16ALL	2	FROM->TO	G17_109	CULBERTSN E7115.00 - WILISTON 115KV CKT 1	127	0.55558	248.1984	DAWSON CREEK - G17109_T(P) 230.00 230KV CKT 1
17SP	16ALL	2	FROM->TO	G17_109	CULBERTSN E7115.00 - WILISTON 115KV CKT 1	125.9	0.55689	245.938	DAWSON CREEK - G17109_T(P) 230.00 230KV CKT 1
16WP	16ALL	2	FROM->TO	G17_109	CULBERTSN E7115.00 - WILISTON 115KV CKT 1	129	0.55612	237.9287	DAWSON CREEK - G17109_T(P) 230.00 230KV CKT 1
17SP	00NR	2	FROM->TO	G17_109	CULBERTSN E7115.00 - WILISTON 115KV CKT 1	125	0.54648	235.5789	DAWSON CREEK - G17109_T(P) 230.00 230KV CKT 1
17G	16NR	2	FROM->TO	G17_109	CULBERTSN E7115.00 - WILISTON 115KV CKT 1	125	0.54211	233.7402	DAWSON CREEK - G17109_T(P) 230.00 230KV CKT 1
20WP	16ALL	2	FROM->TO	G17_109	CULBERTSN E7115.00 - WILISTON 115KV CKT 1	128.8	0.55655	228.3292	DAWSON CREEK - G17109_T(P) 230.00 230KV CKT 1
20SP	16ALL	2	FROM->TO	G17_109	CULBERTSN E7115.00 - WILISTON 115KV CKT 1	126.6	0.55719	221.128	DAWSON CREEK - G17109_T(P) 230.00 230KV CKT 1
20L	16ALL	2	FROM->TO	G17_109	CULBERTSN E7115.00 - WILISTON 115KV CKT 1	125.8	0.55311	217.8983	DAWSON CREEK - G17109_T(P) 230.00 230KV CKT 1
25SP	16ALL	2	FROM->TO	G17_109	CULBERTSN E7115.00 - WILISTON 115KV CKT 1	126.6	0.55731	216.0285	DAWSON CREEK - G17109_T(P) 230.00 230KV CKT 1
20WP	00NR	2	FROM->TO	G17_109	CULBERTSN E7115.00 - WILISTON 115KV CKT 1	129	0.52791	211.187	DAWSON CREEK - G17109_T(P) 230.00 230KV CKT 1
20SP	00NR	2	FROM->TO	G17_109	CULBERTSN E7115.00 - WILISTON 115KV CKT 1	126.7	0.54776	210.7997	DAWSON CREEK - G17109_T(P) 230.00 230KV CKT 1
25SP	00NR	2	FROM->TO	G17_109	CULBERTSN E7115.00 - WILISTON 115KV CKT 1	126.6	0.54778	208.6806	DAWSON CREEK - G17109_T(P) 230.00 230KV CKT 1
20L	16NR	2	FROM->TO	G17_109	CULBERTSN E7115.00 - WILISTON 115KV CKT 1	126.6	0.54585	198.951	DAWSON CREEK - G17109_T(P) 230.00 230KV CKT 1
16WP	00NR	2	FROM->TO	G17_109	CULBERTSN E7115.00 - WILISTON 115KV CKT 1	131.6	0.54653	182.5909	DAWSON CREEK - G17109_T(P) 230.00 230KV CKT 1
17SP	13ALL	2	FROM->TO	G17_109	CULBERTSN E7115.00 - WILISTON 115KV CKT 1	126.9	0.55703	111.9503	DAWSON CREEK - G17109_T(P) 230.00 230KV CKT 1
17G	16ALL	2	FROM->TO	G17_109	CULBERTSN E7115.00 - WILISTON 115KV CKT 1	118.9	0.11342	111.677	System Intact
17G	16NR	2	FROM->TO	G17_109	CULBERTSN E7115.00 - WILISTON 115KV CKT 1	125	0.18221	108.8058	BEAVERHILL4 230.00 - MEDORA 230KV CKT 1
16WP	16ALL	2	FROM->TO	G17_109	CULBERTSN E7115.00 - WILISTON 115KV CKT 1	116.7	0.11375	108.5827	System Intact
20WP	16ALL	2	FROM->TO	G17_109	CULBERTSN E7115.00 - WILISTON 115KV CKT 1	116.5	0.11414	108.4635	System Intact
17SP	00NR	2	FROM->TO	G17_109	CULBERTSN E7115.00 - WILISTON 115KV CKT 1	125	0.04411	107.3722	COALHILL4 230.00 - FT PECK 230KV CKT 1
17SP	00NR	2	FROM->TO	G17_109	CULBERTSN E7115.00 - WILISTON 115KV CKT 1	125	0.04411	107.3722	COALHILL4 230.00 - G17109_T(P) 230.00 230KV CKT 1
17G	16NR	2	FROM->TO	G17_109	CULBERTSN E7115.00 - WILISTON 115KV CKT 1	125	0.18221	106.9658	BELFIELD - MEDORA 230KV CKT 1
17G	16NR	2	FROM->TO	G17_109	CULBERTSN E7115.00 - WILISTON 115KV CKT 1	125	0.03975	105.536	COALHILL4 230.00 - FT PECK 230KV CKT 1
17G	16NR	2	FROM->TO	G17_109	CULBERTSN E7115.00 - WILISTON 115KV CKT 1	125	0.03975	105.536	COALHILL4 230.00 - G17109_T(P) 230.00 230KV CKT 1
17SP	00NR	2	FROM->TO	G17_109	CULBERTSN E7115.00 - WILISTON 115KV CKT 1	125	0.18532	105.3619	BEAVERHILL4 230.00 - MEDORA 230KV CKT 1
17SP	16ALL	2	FROM->TO	G17_109	CULBERTSN E7115.00 - WILISTON 115KV CKT 1	117.8	0.11408	104.8794	System Intact
17SP	00NR	2	FROM->TO	G17_109	CULBERTSN E7115.00 - WILISTON 115KV CKT 1	125	0.18532	104.4819	BEAVERHILL4 230.00 - DAWSON CREEK 230KV CKT 1
17SP	00NR	2	FROM->TO	G17_109	CULBERTSN E7115.00 - WILISTON 115KV CKT 1	125	0.18532	103.5219	BELFIELD - MEDORA 230KV CKT 1
17SP	00NR	2	FROM->TO	G17_109	CULBERTSN E7115.00 - WILISTON 115KV CKT 1	125	0.11016	103.081	CIRCLE - G12_012IST 115.00 115KV CKT 1
17G	16NR	2	FROM->TO	G17_109	CULBERTSN E7115.00 - WILISTON 115KV CKT 1	125	0.10709	102.855	CIRCLE - G12_012IST 115.00 115KV CKT 1
17G	16NR	2	FROM->TO	G17_109	CULBERTSN E7115.00 - WILISTON 115KV CKT 1	125	0.18221	100.0858	BEAVERHILL4 230.00 - DAWSON CREEK 230KV CKT 1
20WP	00NR	2	FROM->TO	G17_109	CULBERTSN E7115.00 - WILISTON 115KV CKT 1	129	0.09231	100.0304	CIRCLE - G12_012IST 115.00 115KV CKT 1
17G	16ALL	2	TO->FROM	G17_109	CULBERTSON - POPLAR 115KV CKT 1	88	0.55585	276.8409	DAWSON CREEK - G17109_T(P) 230.00 230KV CKT 1
16WP	16ALL	2	TO->FROM	G17_109	CULBERTSON - POPLAR 115KV CKT 1	87.9	0.55636	272.7235	DAWSON CREEK - G17109_T(P) 230.00 230KV CKT 1
17SP	16ALL	2	TO->FROM	G17_109	CULBERTSON - POPLAR 115KV CKT 1	88	0.55707	271.7136	DAWSON CREEK - G17109_T(P) 230.00 230KV CKT 1
17G	16NR	2	TO->FROM	G17_109	CULBERTSON - POPLAR 115KV CKT 1	87.9	0.54401	268.9229	DAWSON CREEK - G17109_T(P) 230.00 230KV CKT 1
16WP	00NR	2	TO->FROM	G17_109	CULBERTSON - POPLAR 115KV CKT 1	87.7	0.54807	262.6937	DAWSON CREEK - G17109_T(P) 230.00 230KV CKT 1

SEASON	GROUP	SCENARIO	DIRECTION	SOURCE	MONITORED ELEMENT	RATE (MVA)	TDF	CONTINGENCY LOADING %	CONTINGENCY
17SP	00NR	2	TO->FROM	G17_109	CULBERTSON - POPLAR 115KV CKT 1	88	0.54802	254.28	DAWSON CREEK - G17109_T(P) 230.00 230KV CKT 1
20SP	16ALL	2	TO->FROM	G17_109	CULBERTSON - POPLAR 115KV CKT 1	88	0.55737	235.4727	DAWSON CREEK - G17109_T(P) 230.00 230KV CKT 1
20WP	16ALL	2	TO->FROM	G17_109	CULBERTSON - POPLAR 115KV CKT 1	88	0.55681	233.2864	DAWSON CREEK - G17109_T(P) 230.00 230KV CKT 1
25SP	16ALL	2	TO->FROM	G17_109	CULBERTSON - POPLAR 115KV CKT 1	87.9	0.55747	228.3913	DAWSON CREEK - G17109_T(P) 230.00 230KV CKT 1
20L	16ALL	2	TO->FROM	G17_109	CULBERTSON - POPLAR 115KV CKT 1	88	0.5538	222.0318	DAWSON CREEK - G17109_T(P) 230.00 230KV CKT 1
20SP	00NR	2	TO->FROM	G17_109	CULBERTSON - POPLAR 115KV CKT 1	87.9	0.54923	221.2214	DAWSON CREEK - G17109_T(P) 230.00 230KV CKT 1
25SP	00NR	2	TO->FROM	G17_109	CULBERTSON - POPLAR 115KV CKT 1	87.9	0.54925	218.4983	DAWSON CREEK - G17109_T(P) 230.00 230KV CKT 1
20WP	00NR	2	TO->FROM	G17_109	CULBERTSON - POPLAR 115KV CKT 1	87.9	0.55296	216.891	DAWSON CREEK - G17109_T(P) 230.00 230KV CKT 1
20L	16NR	2	TO->FROM	G17_109	CULBERTSON - POPLAR 115KV CKT 1	88	0.54802	215.53	DAWSON CREEK - G17109_T(P) 230.00 230KV CKT 1
25SP	00NR	2	FROM->TO	G17_109	DAWSON CREEK - FALLON 115KV CKT 1	88	0.07858	123.9155	DAWSON CREEK - MILES CITY EAST 230KV CKT 1
20SP	00NR	2	FROM->TO	G17_109	DAWSON CREEK - FALLON 115KV CKT 1	87.9	0.07856	117.792	DAWSON CREEK - MILES CITY EAST 230KV CKT 1
17SP	00NR	2	FROM->TO	G17_109	DAWSON CREEK - FALLON 115KV CKT 1	87.8	0.07878	107.7558	DAWSON CREEK - MILES CITY EAST 230KV CKT 1
20L	16NR	2	FROM->TO	G17_109	DAWSON CREEK - FALLON 115KV CKT 1	87.7	0.07881	103.1006	DAWSON CREEK - MILES CITY EAST 230KV CKT 1
20WP	00NR	2	FROM->TO	G17_109	DAWSON CREEK - FALLON 115KV CKT 1	88	0.07786	101.8355	DAWSON CREEK - MILES CITY EAST 230KV CKT 1
17SP	16ALL	2	TO->FROM	G17_109	DAWSON CREEK - G17109_T(P) 230.00 230KV CKT 1	176	0.95224	254.0114	CULBERTSN E7115.00 - WILISTON 115KV CKT 1
17G	16ALL	2	TO->FROM	G17_109	DAWSON CREEK - G17109_T(P) 230.00 230KV CKT 1	175.9	0.95052	253.2553	CULBERTSN E7115.00 - WILISTON 115KV CKT 1
16WP	16ALL	2	TO->FROM	G17_109	DAWSON CREEK - G17109_T(P) 230.00 230KV CKT 1	176	0.95116	248.4273	CULBERTSN E7115.00 - WILISTON 115KV CKT 1
17SP	00NR	2	TO->FROM	G17_109	DAWSON CREEK - G17109_T(P) 230.00 230KV CKT 1	176	0.93543	246.7259	CULBERTSN E7115.00 - WILISTON 115KV CKT 1
17G	16NR	2	TO->FROM	G17_109	DAWSON CREEK - G17109_T(P) 230.00 230KV CKT 1	176	0.93092	244.5991	CULBERTSN E7115.00 - WILISTON 115KV CKT 1
20WP	16ALL	2	TO->FROM	G17_109	DAWSON CREEK - G17109_T(P) 230.00 230KV CKT 1	176	0.95137	234.2682	CULBERTSN E7115.00 - WILISTON 115KV CKT 1
17SP	16ALL	2	TO->FROM	G17_109	DAWSON CREEK - G17109_T(P) 230.00 230KV CKT 1	176	0.95235	233.6386	POPLAR - WOLF POINT 115KV CKT 1
25SP	16ALL	2	TO->FROM	G17_109	DAWSON CREEK - G17109_T(P) 230.00 230KV CKT 1	176	0.95256	233.4591	CULBERTSN E7115.00 - WILISTON 115KV CKT 1
20SP	16ALL	2	TO->FROM	G17_109	DAWSON CREEK - G17109_T(P) 230.00 230KV CKT 1	176	0.95237	233.2477	CULBERTSN E7115.00 - WILISTON 115KV CKT 1
17G	16ALL	2	TO->FROM	G17_109	DAWSON CREEK - G17109_T(P) 230.00 230KV CKT 1	175.9	0.95069	231.5202	POPLAR - WOLF POINT 115KV CKT 1
17SP	16ALL	2	TO->FROM	G17_109	DAWSON CREEK - G17109_T(P) 230.00 230KV CKT 1	160	0.88145	231.4675	System Intact
16WP	16ALL	2	TO->FROM	G17_109	DAWSON CREEK - G17109_T(P) 230.00 230KV CKT 1	176	0.95131	229.3136	POPLAR - WOLF POINT 115KV CKT 1
17SP	16ALL	2	TO->FROM	G17_109	DAWSON CREEK - G17109_T(P) 230.00 230KV CKT 1	176	0.95235	229.15	CULBERTSON - POPLAR 115KV CKT 1
17SP	00NR	2	TO->FROM	G17_109	DAWSON CREEK - G17109_T(P) 230.00 230KV CKT 1	160	0.86643	228.4735	System Intact
17G	16NR	2	TO->FROM	G17_109	DAWSON CREEK - G17109_T(P) 230.00 230KV CKT 1	176	0.9321	228.3364	POPLAR - WOLF POINT 115KV CKT 1
17G	16ALL	2	TO->FROM	G17_109	DAWSON CREEK - G17109_T(P) 230.00 230KV CKT 1	175.9	0.95069	228.0523	CULBERTSON - POPLAR 115KV CKT 1
17G	16ALL	2	TO->FROM	G17_109	DAWSON CREEK - G17109_T(P) 230.00 230KV CKT 1	159.9	0.88015	227.0945	System Intact
20SP	00NR	2	TO->FROM	G17_109	DAWSON CREEK - G17109_T(P) 230.00 230KV CKT 1	176	0.93634	226.9482	CULBERTSN E7115.00 - WILISTON 115KV CKT 1
17SP	16ALL	2	TO->FROM	G17_109	DAWSON CREEK - G17109_T(P) 230.00 230KV CKT 1	176	0.88175	226.7114	CIRCLE - G12_012IST 115.00 115KV CKT 1
25SP	00NR	2	TO->FROM	G17_109	DAWSON CREEK - G17109_T(P) 230.00 230KV CKT 1	176	0.93638	226.3305	CULBERTSN E7115.00 - WILISTON 115KV CKT 1
17G	16NR	2	TO->FROM	G17_109	DAWSON CREEK - G17109_T(P) 230.00 230KV CKT 1	160	0.86381	226.3245	System Intact
17SP	00NR	2	TO->FROM	G17_109	DAWSON CREEK - G17109_T(P) 230.00 230KV CKT 1	176	0.93639	226.2186	POPLAR - WOLF POINT 115KV CKT 1
17G	16NR	2	TO->FROM	G17_109	DAWSON CREEK - G17109_T(P) 230.00 230KV CKT 1	176	0.9321	224.9273	CULBERTSON - POPLAR 115KV CKT 1
16WP	16ALL	2	TO->FROM	G17_109	DAWSON CREEK - G17109_T(P) 230.00 230KV CKT 1	176	0.95131	224.7682	CULBERTSON - POPLAR 115KV CKT 1
20L	16ALL	2	TO->FROM	G17_109	DAWSON CREEK - G17109_T(P) 230.00 230KV CKT 1	175.8	0.94653	224.562	CULBERTSN E7115.00 - WILISTON 115KV CKT 1
17SP	00NR	2	TO->FROM	G17_109	DAWSON CREEK - G17109_T(P) 230.00 230KV CKT 1	176	0.86473	224.2691	CIRCLE - G12_012IST 115.00 115KV CKT 1
16WP	16ALL	2	TO->FROM	G17_109	DAWSON CREEK - G17109_T(P) 230.00 230KV CKT 1	160	0.88059	224.125	System Intact
17G	16ALL	2	TO->FROM	G17_109	DAWSON CREEK - G17109_T(P) 230.00 230KV CKT 1	175.9	0.88032	223.22	CIRCLE - G12_012IST 115.00 115KV CKT 1
20WP	00NR	2	TO->FROM	G17_109	DAWSON CREEK - G17109_T(P) 230.00 230KV CKT 1	176	0.9217	222.9227	CULBERTSN E7115.00 - WILISTON 115KV CKT 1
17G	16NR	2	TO->FROM	G17_109	DAWSON CREEK - G17109_T(P) 230.00 230KV CKT 1	176	0.86206	222.5905	CIRCLE - G12_012IST 115.00 115KV CKT 1
17SP	16ALL	2	TO->FROM	G17_109	DAWSON CREEK - G17109_T(P) 230.00 230KV CKT 1	176	0.95235	222.3886	CULBERTSN E7115.00 - CULBERTSON 115KV CKT 1
17G	16ALL	2	TO->FROM	G17_109	DAWSON CREEK - G17109_T(P) 230.00 230KV CKT 1	175.9	0.95069	222.1399	CULBERTSN E7115.00 - CULBERTSON 115KV CKT 1
17SP	00NR	2	TO->FROM	G17_109	DAWSON CREEK - G17109_T(P) 230.00 230KV CKT 1	176	0.93639	221.8436	CULBERTSON - POPLAR 115KV CKT 1
17SP	16ALL	2	TO->FROM	G17_109	DAWSON CREEK - G17109_T(P) 230.00 230KV CKT 1	176	0.88175	221.6545	CIRCLE - DAWSON CREEK 115KV CKT 1
17G	16ALL	2	TO->FROM	G17_109	DAWSON CREEK - G17109_T(P) 230.00 230KV CKT 1	175.9	0.99598	220.0637	FT PECK 230/115KV TRANSFORMER CKT 1
16WP	16ALL	2	TO->FROM	G17_109	DAWSON CREEK - G17109_T(P) 230.00 230KV CKT 1	176	0.88079	219.7909	CIRCLE - G12_012IST 115.00 115KV CKT 1
17SP	00NR	2	TO->FROM	G17_109	DAWSON CREEK - G17109_T(P) 230.00 230KV CKT 1	176	0.86473	219.0986	CIRCLE - DAWSON CREEK 115KV CKT 1
17G	16NR	2	TO->FROM	G17_109	DAWSON CREEK - G17109_T(P) 230.00 230KV CKT 1	176	0.9321	219.0182	CULBERTSN E7115.00 - CULBERTSON 115KV CKT 1
25SP	16ALL	2	TO->FROM	G17_109	DAWSON CREEK - G17109_T(P) 230.00 230KV CKT 1	160	0.8816	219.005	System Intact

SEASON	GROUP	SCENARIO	DIRECTION	SOURCE	MONITORED ELEMENT	RATE (MVA)	TDF	CONTINGENCY LOADING %	CONTINGENCY
16WP	16ALL	2	TO->FROM	G17_109	DAWSON CREEK - G17109_T(P) 230.00 230KV CKT 1	176	0.99652	218.3568	FT PECK 230/115KV TRANSFORMER CKT 1
25SP	16ALL	2	TO->FROM	G17_109	DAWSON CREEK - G17109_T(P) 230.00 230KV CKT 1	176	0.88187	218.1659	CIRCLE - G12_012IST 115.00 115KV CKT 1
16WP	00NR	2	TO->FROM	G17_109	DAWSON CREEK - G17109_T(P) 230.00 230KV CKT 1	176	0.93647	218.1082	POPLAR - WOLF POINT 115KV CKT 1
17G	16ALL	2	TO->FROM	G17_109	DAWSON CREEK - G17109_T(P) 230.00 230KV CKT 1	175.9	0.88032	217.5918	CIRCLE - DAWSON CREEK 115KV CKT 1
16WP	16ALL	2	TO->FROM	G17_109	DAWSON CREEK - G17109_T(P) 230.00 230KV CKT 1	176	0.95131	217.0977	CULBERTSN E7115.00 - CULBERTSON 115KV CKT 1
16WP	00NR	2	TO->FROM	G17_109	DAWSON CREEK - G17109_T(P) 230.00 230KV CKT 1	176	0.93551	216.9677	CULBERTSN E7115.00 - WILISTON 115KV CKT 1
17G	16NR	2	TO->FROM	G17_109	DAWSON CREEK - G17109_T(P) 230.00 230KV CKT 1	176	0.86206	216.8518	CIRCLE - DAWSON CREEK 115KV CKT 1
20L	16NR	2	TO->FROM	G17_109	DAWSON CREEK - G17109_T(P) 230.00 230KV CKT 1	175.9	0.93512	216.1105	CULBERTSN E7115.00 - WILISTON 115KV CKT 1
20SP	16ALL	2	TO->FROM	G17_109	DAWSON CREEK - G17109_T(P) 230.00 230KV CKT 1	160	0.88142	215.0875	System Intact
17SP	00NR	2	TO->FROM	G17_109	DAWSON CREEK - G17109_T(P) 230.00 230KV CKT 1	176	0.93639	215.0823	CULBERTSN E7115.00 - CULBERTSON 115KV CKT 1
17SP	16ALL	2	TO->FROM	G17_109	DAWSON CREEK - G17109_T(P) 230.00 230KV CKT 1	176	0.89605	214.3204	FT PECK - WOLF POINT 115KV CKT 2
17SP	16ALL	2	TO->FROM	G17_109	DAWSON CREEK - G17109_T(P) 230.00 230KV CKT 1	176	0.89514	213.9864	FT PECK - WOLF POINT 115KV CKT 1
20SP	16ALL	2	TO->FROM	G17_109	DAWSON CREEK - G17109_T(P) 230.00 230KV CKT 1	176	0.88167	213.6341	CIRCLE - G12_012IST 115.00 115KV CKT 1
16WP	00NR	2	TO->FROM	G17_109	DAWSON CREEK - G17109_T(P) 230.00 230KV CKT 1	176	0.93647	213.5059	CULBERTSON - POPLAR 115KV CKT 1
17SP	16ALL	2	TO->FROM	G17_109	DAWSON CREEK - G17109_T(P) 230.00 230KV CKT 1	176	0.88145	213.0954	BEAVERHILL4 230.00 - G15098_1 230.00 230KV CKT 1
17SP	16ALL	2	TO->FROM	G17_109	DAWSON CREEK - G17109_T(P) 230.00 230KV CKT 1	176	0.88145	213.0954	G15098_1 230.00 230/34.5KV TRANSFORMER CKT 1
25SP	00NR	2	TO->FROM	G17_109	DAWSON CREEK - G17109_T(P) 230.00 230KV CKT 1	160	0.86668	212.836	System Intact
17SP	16ALL	2	TO->FROM	G17_109	DAWSON CREEK - G17109_T(P) 230.00 230KV CKT 1	176	0.88145	212.5841	DAGLUM 4230.00 - GI1414 4230.00 230KV CKT 1
16WP	16ALL	2	TO->FROM	G17_109	DAWSON CREEK - G17109_T(P) 230.00 230KV CKT 1	176	0.88079	212.575	CIRCLE - DAWSON CREEK 115KV CKT 1
25SP	16ALL	2	TO->FROM	G17_109	DAWSON CREEK - G17109_T(P) 230.00 230KV CKT 1	176	0.95266	212.4023	POPLAR - WOLF POINT 115KV CKT 1
20SP	00NR	2	TO->FROM	G17_109	DAWSON CREEK - G17109_T(P) 230.00 230KV CKT 1	160	0.86664	212.203	System Intact
17SP	16ALL	2	TO->FROM	G17_109	DAWSON CREEK - G17109_T(P) 230.00 230KV CKT 1	176	0.88283	212.1523	TIMBERCREEK4230.00 - WATFORD 230KV CKT 1
17SP	16ALL	2	TO->FROM	G17_109	DAWSON CREEK - G17109_T(P) 230.00 230KV CKT 1	176	0.88283	212.1523	TIMBERCREEK4230.00 - WILLISTON 230KV CKT 1
20SP	16ALL	2	TO->FROM	G17_109	DAWSON CREEK - G17109_T(P) 230.00 230KV CKT 1	176	0.95248	212.0773	POPLAR - WOLF POINT 115KV CKT 1
17SP	16ALL	2	TO->FROM	G17_109	DAWSON CREEK - G17109_T(P) 230.00 230KV CKT 1	176	0.87898	212.0182	DAGLUM 4230.00 - RHAME 4 230.00 230KV CKT 1
25SP	00NR	2	TO->FROM	G17_109	DAWSON CREEK - G17109_T(P) 230.00 230KV CKT 1	176	0.86489	211.9118	CIRCLE - G12_012IST 115.00 115KV CKT 1
16WP	00NR	2	TO->FROM	G17_109	DAWSON CREEK - G17109_T(P) 230.00 230KV CKT 1	160	0.8665	211.3625	System Intact
20SP	00NR	2	TO->FROM	G17_109	DAWSON CREEK - G17109_T(P) 230.00 230KV CKT 1	176	0.86484	211.1641	CIRCLE - G12_012IST 115.00 115KV CKT 1
17SP	00NR	2	TO->FROM	G17_109	DAWSON CREEK - G17109_T(P) 230.00 230KV CKT 1	176	0.88042	210.6446	FT PECK - WOLF POINT 115KV CKT 2
20SP	16ALL	2	TO->FROM	G17_109	DAWSON CREEK - G17109_T(P) 230.00 230KV CKT 1	176	0.99751	210.5704	FT PECK 230/115KV TRANSFORMER CKT 1
17G	16ALL	2	TO->FROM	G17_109	DAWSON CREEK - G17109_T(P) 230.00 230KV CKT 1	175.9	0.89465	210.4286	FT PECK - WOLF POINT 115KV CKT 2
17SP	00NR	2	TO->FROM	G17_109	DAWSON CREEK - G17109_T(P) 230.00 230KV CKT 1	176	0.87955	210.3727	FT PECK - WOLF POINT 115KV CKT 1
17G	16ALL	2	TO->FROM	G17_109	DAWSON CREEK - G17109_T(P) 230.00 230KV CKT 1	175.9	0.89375	210.2104	FT PECK - WOLF POINT 115KV CKT 1
17G	16NR	2	TO->FROM	G17_109	DAWSON CREEK - G17109_T(P) 230.00 230KV CKT 1	176	0.87745	209.2523	FT PECK - WOLF POINT 115KV CKT 2
17G	16ALL	2	TO->FROM	G17_109	DAWSON CREEK - G17109_T(P) 230.00 230KV CKT 1	175.9	0.88015	209.1666	G15098_1 230.00 230/34.5KV TRANSFORMER CKT 1
17G	16ALL	2	TO->FROM	G17_109	DAWSON CREEK - G17109_T(P) 230.00 230KV CKT 1	175.9	0.88015	209.1097	BEAVERHILL4 230.00 - G15098_1 230.00 230KV CKT 1
17G	16NR	2	TO->FROM	G17_109	DAWSON CREEK - G17109_T(P) 230.00 230KV CKT 1	176	0.8766	209.0409	FT PECK - WOLF POINT 115KV CKT 1
16WP	00NR	2	TO->FROM	G17_109	DAWSON CREEK - G17109_T(P) 230.00 230KV CKT 1	176	0.98407	208.865	FT PECK 230/115KV TRANSFORMER CKT 1
17SP	16ALL	2	TO->FROM	G17_109	DAWSON CREEK - G17109_T(P) 230.00 230KV CKT 1	176	0.88275	208.8387	JUDSON 3345.00 (JUDSON KU1A) 345/230/13.8KV TRANSFORMER CKT 1
17SP	16ALL	2	TO->FROM	G17_109	DAWSON CREEK - G17109_T(P) 230.00 230KV CKT 1	176	0.88275	208.8387	JUDSON 4230.00 - WILLISTON 230KV CKT 1
20WP	16ALL	2	TO->FROM	G17_109	DAWSON CREEK - G17109_T(P) 230.00 230KV CKT 1	160	0.88055	208.745	System Intact
17G	16ALL	2	TO->FROM	G17_109	DAWSON CREEK - G17109_T(P) 230.00 230KV CKT 1	175.9	0.88015	208.5981	DAGLUM 4230.00 - GI1414 4230.00 230KV CKT 1
17SP	16ALL	2	TO->FROM	G17_109	DAWSON CREEK - G17109_T(P) 230.00 230KV CKT 1	176	0.87729	208.5886	BOWMAN - RHAME 4 230.00 230KV CKT 1
17SP	16ALL	2	TO->FROM	G17_109	DAWSON CREEK - G17109_T(P) 230.00 230KV CKT 1	176	0.86526	208.3932	BAKER - LTLMISS 230KV CKT 1
20WP	16ALL	2	TO->FROM	G17_109	DAWSON CREEK - G17109_T(P) 230.00 230KV CKT 1	176	0.88069	208.0704	CIRCLE - G12_012IST 115.00 115KV CKT 1
17G	16NR	2	TO->FROM	G17_109	DAWSON CREEK - G17109_T(P) 230.00 230KV CKT 1	176	0.86381	207.9086	BEAVERHILL4 230.00 - G15098_1 230.00 230KV CKT 1
17G	16NR	2	TO->FROM	G17_109	DAWSON CREEK - G17109_T(P) 230.00 230KV CKT 1	176	0.86381	207.9086	G15098_1 230.00 230/34.5KV TRANSFORMER CKT 1
16WP	16ALL	2	TO->FROM	G17_109	DAWSON CREEK - G17109_T(P) 230.00 230KV CKT 1	176	0.89513	207.8068	FT PECK - WOLF POINT 115KV CKT 2
25SP	16ALL	2	TO->FROM	G17_109	DAWSON CREEK - G17109_T(P) 230.00 230KV CKT 1	176	0.95266	207.8	CULBERTSON - POPLAR 115KV CKT 1
17G	16NR	2	TO->FROM	G17_109	DAWSON CREEK - G17109_T(P) 230.00 230KV CKT 1	176	0.86381	207.6814	DAGLUM 4230.00 - GI1414 4230.00 230KV CKT 1
20SP	16ALL	2	TO->FROM	G17_109	DAWSON CREEK - G17109_T(P) 230.00 230KV CKT 1	176	0.95248	207.5886	CULBERTSON - POPLAR 115KV CKT 1
16WP	16ALL	2	TO->FROM	G17_109	DAWSON CREEK - G17109_T(P) 230.00 230KV CKT 1	176	0.89423	207.5295	FT PECK - WOLF POINT 115KV CKT 1
20WP	16ALL	2	TO->FROM	G17_109	DAWSON CREEK - G17109_T(P) 230.00 230KV CKT 1	176	0.95153	207.375	POPLAR - WOLF POINT 115KV CKT 1

SEASON	GROUP	SCENARIO	DIRECTION	SOURCE	MONITORED ELEMENT	RATE (MVA)	TDF	CONTINGENCY LOADING %	CONTINGENCY
25SP	16ALL	2	TO->FROM	G17_109	DAWSON CREEK - G17109_T(P) 230.00 230KV CKT 1	176	0.8816	207.2205	COALHILL4 230.00 230/6.9KV TRANSFORMER CKT 1
20WP	16ALL	2	TO->FROM	G17_109	DAWSON CREEK - G17109_T(P) 230.00 230KV CKT 1	176	0.99671	206.9227	FT PECK 230/115KV TRANSFORMER CKT 1
17SP	16ALL	2	TO->FROM	G17_109	DAWSON CREEK - G17109_T(P) 230.00 230KV CKT 1	176	0.86091	206.8523	BELFIELD - CHARLIE CREEK 345KV CKT 1
17SP	00NR	2	TO->FROM	G17_109	DAWSON CREEK - G17109_T(P) 230.00 230KV CKT 1	176	0.84419	206.8414	BELFIELD - CHARLIE CREEK 345KV CKT 1
17SP	00NR	2	TO->FROM	G17_109	DAWSON CREEK - G17109_T(P) 230.00 230KV CKT 1	176	0.85088	206.8077	LTLMISS - RHAME 4 230.00 230KV CKT 1
16WP	16ALL	2	TO->FROM	G17_109	DAWSON CREEK - G17109_T(P) 230.00 230KV CKT 1	176	0.88059	206.4773	BEAVERHILL4 230.00 - G15098_1 230.00 230KV CKT 1
16WP	16ALL	2	TO->FROM	G17_109	DAWSON CREEK - G17109_T(P) 230.00 230KV CKT 1	176	0.88059	206.4773	G15098_1 230.00 230/34.5KV TRANSFORMER CKT 1
25SP	16ALL	2	TO->FROM	G17_109	DAWSON CREEK - G17109_T(P) 230.00 230KV CKT 1	176	0.88187	206.3477	CIRCLE - DAWSON CREEK 115KV CKT 1
16WP	00NR	2	TO->FROM	G17_109	DAWSON CREEK - G17109_T(P) 230.00 230KV CKT 1	176	0.86481	206.2155	CIRCLE - G12_012IST 115.00 115KV CKT 1
16WP	16ALL	2	TO->FROM	G17_109	DAWSON CREEK - G17109_T(P) 230.00 230KV CKT 1	176	0.88059	205.9091	DAGLUM 4230.00 - GI1414 4230.00 230KV CKT 1
16WP	00NR	2	TO->FROM	G17_109	DAWSON CREEK - G17109_T(P) 230.00 230KV CKT 1	176	0.93647	205.8354	CULBERTSN E7115.00 - CULBERTSON 115KV CKT 1
20SP	00NR	2	TO->FROM	G17_109	DAWSON CREEK - G17109_T(P) 230.00 230KV CKT 1	176	0.93726	205.8086	POPLAR - WOLF POINT 115KV CKT 1
25SP	00NR	2	TO->FROM	G17_109	DAWSON CREEK - G17109_T(P) 230.00 230KV CKT 1	176	0.9373	205.5318	POPLAR - WOLF POINT 115KV CKT 1
17SP	00NR	2	TO->FROM	G17_109	DAWSON CREEK - G17109_T(P) 230.00 230KV CKT 1	176	0.86304	205.3822	BISON - MAURINE 230KV CKT 1
17SP	00NR	2	TO->FROM	G17_109	DAWSON CREEK - G17109_T(P) 230.00 230KV CKT 1	176	0.86712	205.3286	CHAR.CK4 230.00 - WATFORD 230KV CKT 1
17SP	00NR	2	TO->FROM	G17_109	DAWSON CREEK - G17109_T(P) 230.00 230KV CKT 1	176	0.86304	205.2118	BISON - HETINGER 230KV CKT 1
17SP	00NR	2	TO->FROM	G17_109	DAWSON CREEK - G17109_T(P) 230.00 230KV CKT 1	176	0.85509	205.1868	DAWSON CREEK - LEWIS & CLARK 115KV CKT 1
16WP	16ALL	2	TO->FROM	G17_109	DAWSON CREEK - G17109_T(P) 230.00 230KV CKT 1	176	0.87811	205.0614	DAGLUM 4230.00 - RHAME 4 230.00 230KV CKT 1
20SP	00NR	2	TO->FROM	G17_109	DAWSON CREEK - G17109_T(P) 230.00 230KV CKT 1	176	0.98476	204.9564	FT PECK 230/115KV TRANSFORMER CKT 1
25SP	16ALL	2	TO->FROM	G17_109	DAWSON CREEK - G17109_T(P) 230.00 230KV CKT 1	176	0.8816	204.9477	FT PECK - KPS10-FP7 115.00 115KV CKT 1
25SP	16ALL	2	TO->FROM	G17_109	DAWSON CREEK - G17109_T(P) 230.00 230KV CKT 1	176	0.8816	204.9477	KPS10-FP7 115.00 115/6.9KV TRANSFORMER CKT 1
20L	16ALL	2	TO->FROM	G17_109	DAWSON CREEK - G17109_T(P) 230.00 230KV CKT 1	175.8	0.98999	204.7759	FT PECK 230/115KV TRANSFORMER CKT 1
17G	16ALL	2	TO->FROM	G17_109	DAWSON CREEK - G17109_T(P) 230.00 230KV CKT 1	175.9	0.88147	204.4594	JUDSON 3345.00 (JUDSON KU1A) 345/230/13.8KV TRANSFORMER CKT 1
17G	16ALL	2	TO->FROM	G17_109	DAWSON CREEK - G17109_T(P) 230.00 230KV CKT 1	175.9	0.88147	204.4594	JUDSON 4230.00 - WILLISTON 230KV CKT 1
17SP	00NR	2	TO->FROM	G17_109	DAWSON CREEK - G17109_T(P) 230.00 230KV CKT 1	176	0.85509	204.3914	LEWIS & CLARK - RICHLAND 115KV CKT 1
17G	16ALL	2	TO->FROM	G17_109	DAWSON CREEK - G17109_T(P) 230.00 230KV CKT 1	175.9	0.864	204.357	BAKER - LTLMISS 230KV CKT 1
20L	16ALL	2	TO->FROM	G17_109	DAWSON CREEK - G17109_T(P) 230.00 230KV CKT 1	159.8	0.87661	204.3279	System Intact
17SP	16ALL	2	TO->FROM	G17_109	DAWSON CREEK - G17109_T(P) 230.00 230KV CKT 1	176	0.82634	204.2773	BEAVERHILL4 230.00 - DAWSON CREEK 230KV CKT 1
17G	16ALL	2	TO->FROM	G17_109	DAWSON CREEK - G17109_T(P) 230.00 230KV CKT 1	175.9	0.87627	203.8022	BISON - MAURINE 230KV CKT 1
20SP	16ALL	2	TO->FROM	G17_109	DAWSON CREEK - G17109_T(P) 230.00 230KV CKT 1	176	0.88142	203.7159	COALHILL4 230.00 230/6.9KV TRANSFORMER CKT 1
17G	16NR	2	TO->FROM	G17_109	DAWSON CREEK - G17109_T(P) 230.00 230KV CKT 1	176	0.86381	203.7041	G15046_1 345.00 - TANDE 3345.00 345KV CKT 1
17G	16ALL	2	TO->FROM	G17_109	DAWSON CREEK - G17109_T(P) 230.00 230KV CKT 1	175.9	0.87627	203.6316	BISON - HETINGER 230KV CKT 1
17G	16NR	2	TO->FROM	G17_109	DAWSON CREEK - G17109_T(P) 230.00 230KV CKT 1	176	0.84827	203.6059	BAKER - LTLMISS 230KV CKT 1
17G	16ALL	2	TO->FROM	G17_109	DAWSON CREEK - G17109_T(P) 230.00 230KV CKT 1	175.9	0.87766	203.5975	BELFIELD - DAGLUM 4230.00 230KV CKT 1
17G	16ALL	2	TO->FROM	G17_109	DAWSON CREEK - G17109_T(P) 230.00 230KV CKT 1	175.9	0.86894	203.4338	LEWIS & CLARK - RICHLAND 115KV CKT 1
20L	16NR	2	TO->FROM	G17_109	DAWSON CREEK - G17109_T(P) 230.00 230KV CKT 1	159.9	0.86658	203.3806	System Intact
17G	16NR	2	TO->FROM	G17_109	DAWSON CREEK - G17109_T(P) 230.00 230KV CKT 1	176	0.86113	203.2736	BELFIELD - DAGLUM 4230.00 230KV CKT 1
17G	16NR	2	TO->FROM	G17_109	DAWSON CREEK - G17109_T(P) 230.00 230KV CKT 1	176	0.85264	203.2641	LEWIS & CLARK - RICHLAND 115KV CKT 1
17G	16NR	2	TO->FROM	G17_109	DAWSON CREEK - G17109_T(P) 230.00 230KV CKT 1	176	0.86043	203.1464	BISON - MAURINE 230KV CKT 1
20WP	16ALL	2	TO->FROM	G17_109	DAWSON CREEK - G17109_T(P) 230.00 230KV CKT 1	176	0.95153	203	CULBERTSON - POPLAR 115KV CKT 1
17G	16NR	2	TO->FROM	G17_109	DAWSON CREEK - G17109_T(P) 230.00 230KV CKT 1	176	0.86043	202.9759	BISON - HETINGER 230KV CKT 1
17SP	00NR	2	TO->FROM	G17_109	DAWSON CREEK - G17109_T(P) 230.00 230KV CKT 1	176	0.85761	202.9745	DAWSON CREEK - MILES CITY EAST 230KV CKT 1
20WP	00NR	2	TO->FROM	G17_109	DAWSON CREEK - G17109_T(P) 230.00 230KV CKT 1	160	0.86326	202.777	System Intact
16WP	16ALL	2	TO->FROM	G17_109	DAWSON CREEK - G17109_T(P) 230.00 230KV CKT 1	176	0.86442	202.7477	LTLMISS - RHAME 4 230.00 230KV CKT 1
20WP	00NR	2	TO->FROM	G17_109	DAWSON CREEK - G17109_T(P) 230.00 230KV CKT 1	176	0.86022	202.4264	CIRCLE - G12_012IST 115.00 115KV CKT 1
17G	16NR	2	TO->FROM	G17_109	DAWSON CREEK - G17109_T(P) 230.00 230KV CKT 1	176	0.85264	202.2413	DAWSON CREEK - LEWIS & CLARK 115KV CKT 1
20SP	16ALL	2	TO->FROM	G17_109	DAWSON CREEK - G17109_T(P) 230.00 230KV CKT 1	176	0.88167	202.1	CIRCLE - DAWSON CREEK 115KV CKT 1
20L	16ALL	2	TO->FROM	G17_109	DAWSON CREEK - G17109_T(P) 230.00 230KV CKT 1	175.8	0.87661	202.0318	CIRCLE - G12_012IST 115.00 115KV CKT 1
16WP	16ALL	2	TO->FROM	G17_109	DAWSON CREEK - G17109_T(P) 230.00 230KV CKT 1	176	0.87495	201.8727	FAIRVIEW - RICHLAND 115KV CKT 1
16WP	16ALL	2	TO->FROM	G17_109	DAWSON CREEK - G17109_T(P) 230.00 230KV CKT 1	176	0.88189	201.7682	JUDSON 3345.00 (JUDSON KU1A) 345/230/13.8KV TRANSFORMER CKT 1
16WP	16ALL	2	TO->FROM	G17_109	DAWSON CREEK - G17109_T(P) 230.00 230KV CKT 1	176	0.88189	201.7682	JUDSON 4230.00 - WILLISTON 230KV CKT 1
25SP	16ALL	2	TO->FROM	G17_109	DAWSON CREEK - G17109_T(P) 230.00 230KV CKT 1	176	0.8816	201.7659	BEAVERHILL4 230.00 - G15098_1 230.00 230KV CKT 1
25SP	16ALL	2	TO->FROM	G17_109	DAWSON CREEK - G17109_T(P) 230.00 230KV CKT 1	176	0.8816	201.7659	G15098_1 230.00 230/34.5KV TRANSFORMER CKT 1

SEASON	GROUP	SCENARIO	DIRECTION	SOURCE	MONITORED ELEMENT	RATE (MVA)	TDF	CONTINGENCY LOADING %	CONTINGENCY
25SP	00NR	2	TO->FROM	G17_109	DAWSON CREEK - G17109_T(P) 230.00 230KV CKT 1	176	0.86668	201.6691	COALHILL4 230.00 230/6.9KV TRANSFORMER CKT 1
17G	16NR	2	TO->FROM	G17_109	DAWSON CREEK - G17109_T(P) 230.00 230KV CKT 1	176	0.84167	201.6673	BELFIELD - CHARLIE CREEK 345KV CKT 1
25SP	16ALL	2	TO->FROM	G17_109	DAWSON CREEK - G17109_T(P) 230.00 230KV CKT 1	176	0.89622	201.6364	FT PECK - WOLF POINT 115KV CKT 2
16WP	16ALL	2	TO->FROM	G17_109	DAWSON CREEK - G17109_T(P) 230.00 230KV CKT 1	176	0.87669	201.5659	BISON - MAURINE 230KV CKT 1
20L	16NR	2	TO->FROM	G17_109	DAWSON CREEK - G17109_T(P) 230.00 230KV CKT 1	175.9	0.97761	201.4413	FT PECK 230/115KV TRANSFORMER CKT 1
20L	16NR	2	TO->FROM	G17_109	DAWSON CREEK - G17109_T(P) 230.00 230KV CKT 1	175.9	0.86559	201.4149	CIRCLE - G12_012IST 115.00 115KV CKT 1
20SP	16ALL	2	TO->FROM	G17_109	DAWSON CREEK - G17109_T(P) 230.00 230KV CKT 1	176	0.88142	201.3864	FT PECK - KPS10-FP7 115.00 115KV CKT 1
20SP	16ALL	2	TO->FROM	G17_109	DAWSON CREEK - G17109_T(P) 230.00 230KV CKT 1	176	0.88142	201.3864	KPS10-FP7 115.00 115/6.9KV TRANSFORMER CKT 1
16WP	16ALL	2	TO->FROM	G17_109	DAWSON CREEK - G17109_T(P) 230.00 230KV CKT 1	176	0.87669	201.3387	BISON - HETINGER 230KV CKT 1
20SP	00NR	2	TO->FROM	G17_109	DAWSON CREEK - G17109_T(P) 230.00 230KV CKT 1	176	0.93726	201.32	CULBERTSON - POPLAR 115KV CKT 1
25SP	16ALL	2	TO->FROM	G17_109	DAWSON CREEK - G17109_T(P) 230.00 230KV CKT 1	176	0.89531	201.3023	FT PECK - WOLF POINT 115KV CKT 1
25SP	16ALL	2	TO->FROM	G17_109	DAWSON CREEK - G17109_T(P) 230.00 230KV CKT 1	176	0.87911	201.2023	DAGLUM 4230.00 - RHAME 4 230.00 230KV CKT 1
25SP	16ALL	2	TO->FROM	G17_109	DAWSON CREEK - G17109_T(P) 230.00 230KV CKT 1	176	0.8816	201.1977	DAGLUM 4230.00 - GI1414 4230.00 230KV CKT 1
20SP	00NR	2	TO->FROM	G17_109	DAWSON CREEK - G17109_T(P) 230.00 230KV CKT 1	176	0.86664	201.0936	COALHILL4 230.00 230/6.9KV TRANSFORMER CKT 1
17G	16ALL	2	TO->FROM	G17_109	DAWSON CREEK - G17109_T(P) 230.00 230KV CKT 1	175.9	0.8251	201.0415	BEAVERHILL4 230.00 - DAWSON CREEK 230KV CKT 1
25SP	16ALL	2	TO->FROM	G17_109	DAWSON CREEK - G17109_T(P) 230.00 230KV CKT 1	176	0.88282	200.9636	JUDSON 3345.00 - PATENTGATE 3345.00 345KV CKT 1
25SP	00NR	2	TO->FROM	G17_109	DAWSON CREEK - G17109_T(P) 230.00 230KV CKT 1	176	0.9373	200.8727	CULBERTSON - POPLAR 115KV CKT 1
25SP	16ALL	2	TO->FROM	G17_109	DAWSON CREEK - G17109_T(P) 230.00 230KV CKT 1	176	0.8816	200.8	CIRCLE - KPS12-CR7 115.00 115KV CKT 1
25SP	16ALL	2	TO->FROM	G17_109	DAWSON CREEK - G17109_T(P) 230.00 230KV CKT 1	176	0.8816	200.8	KPS12-CR7 115.00 115/6.9KV TRANSFORMER CKT 1
25SP	00NR	2	TO->FROM	G17_109	DAWSON CREEK - G17109_T(P) 230.00 230KV CKT 1	176	0.86489	200.1505	CIRCLE - DAWSON CREEK 115KV CKT 1
17SP	00NR	2	TO->FROM	G17_109	DAWSON CREEK - G17109_T(P) 230.00 230KV CKT 1	176	0.81234	199.9709	BELFIELD - MEDORA 230KV CKT 1
17SP	00NR	2	TO->FROM	G17_109	DAWSON CREEK - G17109_T(P) 230.00 230KV CKT 1	176	0.82497	199.7105	DAWSON CREEK (DC KU5A) 230/115/13.2KV TRANSFORMER CKT 1
17G	16NR	2	TO->FROM	G17_109	DAWSON CREEK - G17109_T(P) 230.00 230KV CKT 1	176	0.80977	199.5605	BEAVERHILL4 230.00 - DAWSON CREEK 230KV CKT 1
20SP	00NR	2	TO->FROM	G17_109	DAWSON CREEK - G17109_T(P) 230.00 230KV CKT 1	176	0.86484	199.5163	CIRCLE - DAWSON CREEK 115KV CKT 1
17SP	00NR	2	TO->FROM	G17_109	DAWSON CREEK - G17109_T(P) 230.00 230KV CKT 1	176	0.81234	199.4595	BEAVERHILL4 230.00 - DAWSON CREEK 230KV CKT 1
20L	16ALL	2	TO->FROM	G17_109	DAWSON CREEK - G17109_T(P) 230.00 230KV CKT 1	175.8	0.94696	199.4016	POPLAR - WOLF POINT 115KV CKT 1
25SP	00NR	2	TO->FROM	G17_109	DAWSON CREEK - G17109_T(P) 230.00 230KV CKT 1	176	0.86668	199.3964	FT PECK - KPS10-FP7 115.00 115KV CKT 1
25SP	00NR	2	TO->FROM	G17_109	DAWSON CREEK - G17109_T(P) 230.00 230KV CKT 1	176	0.86668	199.3964	KPS10-FP7 115.00 115/6.9KV TRANSFORMER CKT 1
16WP	00NR	2	TO->FROM	G17_109	DAWSON CREEK - G17109_T(P) 230.00 230KV CKT 1	176	0.86481	199.2836	CIRCLE - DAWSON CREEK 115KV CKT 1
20WP	00NR	2	TO->FROM	G17_109	DAWSON CREEK - G17109_T(P) 230.00 230KV CKT 1	176	0.98478	199.1077	FT PECK 230/115KV TRANSFORMER CKT 1
17SP	00NR	2	TO->FROM	G17_109	DAWSON CREEK - G17109_T(P) 230.00 230KV CKT 1	176	0.81234	199.005	BEAVERHILL4 230.00 - MEDORA 230KV CKT 1
20SP	00NR	2	TO->FROM	G17_109	DAWSON CREEK - G17109_T(P) 230.00 230KV CKT 1	176	0.86664	198.8209	FT PECK - KPS10-FP7 115.00 115KV CKT 1
20SP	00NR	2	TO->FROM	G17_109	DAWSON CREEK - G17109_T(P) 230.00 230KV CKT 1	176	0.86664	198.8209	KPS10-FP7 115.00 115/6.9KV TRANSFORMER CKT 1
20WP	00NR	2	TO->FROM	G17_109	DAWSON CREEK - G17109_T(P) 230.00 230KV CKT 1	176	0.93725	198.5341	POPLAR - WOLF POINT 115KV CKT 1
20SP	16ALL	2	TO->FROM	G17_109	DAWSON CREEK - G17109_T(P) 230.00 230KV CKT 1	176	0.89604	198.4705	FT PECK - WOLF POINT 115KV CKT 2
25SP	16ALL	2	TO->FROM	G17_109	DAWSON CREEK - G17109_T(P) 230.00 230KV CKT 1	176	0.8611	198.3182	BELFIELD - CHARLIE CREEK 345KV CKT 1
20SP	16ALL	2	TO->FROM	G17_109	DAWSON CREEK - G17109_T(P) 230.00 230KV CKT 1	176	0.88142	198.2045	BEAVERHILL4 230.00 - G15098_1 230.00 230KV CKT 1
20SP	16ALL	2	TO->FROM	G17_109	DAWSON CREEK - G17109_T(P) 230.00 230KV CKT 1	176	0.88142	198.2045	G15098_1 230.00 230/34.5KV TRANSFORMER CKT 1
20SP	16ALL	2	TO->FROM	G17_109	DAWSON CREEK - G17109_T(P) 230.00 230KV CKT 1	176	0.89513	198.1364	FT PECK - WOLF POINT 115KV CKT 1
25SP	16ALL	2	TO->FROM	G17_109	DAWSON CREEK - G17109_T(P) 230.00 230KV CKT 1	176	0.86541	198.0886	LTLMISS - RHAME 4 230.00 230KV CKT 1
20WP	16ALL	2	TO->FROM	G17_109	DAWSON CREEK - G17109_T(P) 230.00 230KV CKT 1	176	0.88055	198.0636	COALHILL4 230.00 230/6.9KV TRANSFORMER CKT 1
16WP	16ALL	2	TO->FROM	G17_109	DAWSON CREEK - G17109_T(P) 230.00 230KV CKT 1	176	0.82553	197.9568	BEAVERHILL4 230.00 - DAWSON CREEK 230KV CKT 1
20SP	16ALL	2	TO->FROM	G17_109	DAWSON CREEK - G17109_T(P) 230.00 230KV CKT 1	176	0.88142	197.6932	DAGLUM 4230.00 - GI1414 4230.00 230KV CKT 1
20SP	16ALL	2	TO->FROM	G17_109	DAWSON CREEK - G17109_T(P) 230.00 230KV CKT 1	176	0.87893	197.4682	DAGLUM 4230.00 - RHAME 4 230.00 230KV CKT 1
20SP	16ALL	2	TO->FROM	G17_109	DAWSON CREEK - G17109_T(P) 230.00 230KV CKT 1	176	0.88142	197.2386	CIRCLE - KPS12-CR7 115.00 115KV CKT 1
20SP	16ALL	2	TO->FROM	G17_109	DAWSON CREEK - G17109_T(P) 230.00 230KV CKT 1	176	0.88142	197.2386	KPS12-CR7 115.00 115/6.9KV TRANSFORMER CKT 1
20L	16ALL	2	TO->FROM	G17_109	DAWSON CREEK - G17109_T(P) 230.00 230KV CKT 1	175.8	0.94696	196.785	CULBERTSON - POPLAR 115KV CKT 1
20L	16NR	2	TO->FROM	G17_109	DAWSON CREEK - G17109_T(P) 230.00 230KV CKT 1	175.9	0.93647	196.7427	POPLAR - WOLF POINT 115KV CKT 1
16WP	00NR	2	TO->FROM	G17_109	DAWSON CREEK - G17109_T(P) 230.00 230KV CKT 1	176	0.8805	195.8864	FT PECK - WOLF POINT 115KV CKT 2
20WP	16ALL	2	TO->FROM	G17_109	DAWSON CREEK - G17109_T(P) 230.00 230KV CKT 1	176	0.88055	195.7341	FT PECK - KPS10-FP7 115.00 115KV CKT 1
20WP	16ALL	2	TO->FROM	G17_109	DAWSON CREEK - G17109_T(P) 230.00 230KV CKT 1	176	0.88055	195.7341	KPS10-FP7 115.00 115/6.9KV TRANSFORMER CKT 1
16WP	00NR	2	TO->FROM	G17_109	DAWSON CREEK - G17109_T(P) 230.00 230KV CKT 1	176	0.87963	195.6714	FT PECK - WOLF POINT 115KV CKT 1
25SP	00NR	2	TO->FROM	G17_109	DAWSON CREEK - G17109_T(P) 230.00 230KV CKT 1	176	0.88079	195.655	FT PECK - WOLF POINT 115KV CKT 2

SEASON	GROUP	SCENARIO	DIRECTION	SOURCE	MONITORED ELEMENT	RATE (MVA)	TDF	CONTINGENCY LOADING %	CONTINGENCY
25SP	00NR	2	TO->FROM	G17_109	DAWSON CREEK - G17109_T(P) 230.00 230KV CKT 1	176	0.87992	195.3264	FT PECK - WOLF POINT 115KV CKT 1
25SP	00NR	2	TO->FROM	G17_109	DAWSON CREEK - G17109_T(P) 230.00 230KV CKT 1	176	0.86668	195.2487	CIRCLE - KPS12-CR7 115.00 115KV CKT 1
25SP	00NR	2	TO->FROM	G17_109	DAWSON CREEK - G17109_T(P) 230.00 230KV CKT 1	176	0.86668	195.2487	KPS12-CR7 115.00 115/6.9KV TRANSFORMER CKT 1
25SP	16ALL	2	TO->FROM	G17_109	DAWSON CREEK - G17109_T(P) 230.00 230KV CKT 1	176	0.82647	195.2182	BEAVERHILL4 230.00 - DAWSON CREEK 230KV CKT 1
25SP	00NR	2	TO->FROM	G17_109	DAWSON CREEK - G17109_T(P) 230.00 230KV CKT 1	176	0.86401	195.1609	DAGLUM 4230.00 - RHAME 4 230.00 230KV CKT 1
20SP	00NR	2	TO->FROM	G17_109	DAWSON CREEK - G17109_T(P) 230.00 230KV CKT 1	176	0.88075	195.1364	FT PECK - WOLF POINT 115KV CKT 2
20SP	00NR	2	TO->FROM	G17_109	DAWSON CREEK - G17109_T(P) 230.00 230KV CKT 1	176	0.87987	194.8627	FT PECK - WOLF POINT 115KV CKT 1
25SP	00NR	2	TO->FROM	G17_109	DAWSON CREEK - G17109_T(P) 230.00 230KV CKT 1	176	0.84446	194.7314	BELFIELD - CHARLIE CREEK 345KV CKT 1
20SP	00NR	2	TO->FROM	G17_109	DAWSON CREEK - G17109_T(P) 230.00 230KV CKT 1	176	0.86664	194.6732	CIRCLE - KPS12-CR7 115.00 115KV CKT 1
20SP	00NR	2	TO->FROM	G17_109	DAWSON CREEK - G17109_T(P) 230.00 230KV CKT 1	176	0.86664	194.6732	KPS12-CR7 115.00 115/6.9KV TRANSFORMER CKT 1
20SP	00NR	2	TO->FROM	G17_109	DAWSON CREEK - G17109_T(P) 230.00 230KV CKT 1	176	0.86395	194.4682	DAGLUM 4230.00 - RHAME 4 230.00 230KV CKT 1
20SP	16ALL	2	TO->FROM	G17_109	DAWSON CREEK - G17109_T(P) 230.00 230KV CKT 1	176	0.86524	194.4159	LTLMISS - RHAME 4 230.00 230KV CKT 1
20L	16NR	2	TO->FROM	G17_109	DAWSON CREEK - G17109_T(P) 230.00 230KV CKT 1	175.9	0.93647	194.1844	CULBERTSON - POPLAR 115KV CKT 1
20WP	00NR	2	TO->FROM	G17_109	DAWSON CREEK - G17109_T(P) 230.00 230KV CKT 1	176	0.93725	194.1023	CULBERTSON - POPLAR 115KV CKT 1
20SP	16ALL	2	TO->FROM	G17_109	DAWSON CREEK - G17109_T(P) 230.00 230KV CKT 1	176	0.86089	193.9545	BELFIELD - CHARLIE CREEK 345KV CKT 1
20SP	00NR	2	TO->FROM	G17_109	DAWSON CREEK - G17109_T(P) 230.00 230KV CKT 1	176	0.84439	193.8664	BELFIELD - CHARLIE CREEK 345KV CKT 1
20L	16ALL	2	TO->FROM	G17_109	DAWSON CREEK - G17109_T(P) 230.00 230KV CKT 1	175.8	0.87661	193.6701	CIRCLE - DAWSON CREEK 115KV CKT 1
20WP	16ALL	2	TO->FROM	G17_109	DAWSON CREEK - G17109_T(P) 230.00 230KV CKT 1	176	0.88069	193.5818	CIRCLE - DAWSON CREEK 115KV CKT 1
25SP	00NR	2	TO->FROM	G17_109	DAWSON CREEK - G17109_T(P) 230.00 230KV CKT 1	176	0.85116	193.4495	LTLMISS - RHAME 4 230.00 230KV CKT 1
20L	16NR	2	TO->FROM	G17_109	DAWSON CREEK - G17109_T(P) 230.00 230KV CKT 1	175.9	0.86559	193.001	CIRCLE - DAWSON CREEK 115KV CKT 1
25SP	00NR	2	TO->FROM	G17_109	DAWSON CREEK - G17109_T(P) 230.00 230KV CKT 1	176	0.85116	192.995	BAKER - LTLMISS 230KV CKT 1
20L	16ALL	2	TO->FROM	G17_109	DAWSON CREEK - G17109_T(P) 230.00 230KV CKT 1	175.8	0.94696	192.9169	CULBERTSN E7115.00 - CULBERTSON 115KV CKT 1
20WP	16ALL	2	TO->FROM	G17_109	DAWSON CREEK - G17109_T(P) 230.00 230KV CKT 1	176	0.89513	192.6977	FT PECK - WOLF POINT 115KV CKT 2
20WP	00NR	2	TO->FROM	G17_109	DAWSON CREEK - G17109_T(P) 230.00 230KV CKT 1	176	0.86326	192.6382	COALHILL4 230.00 230/6.9KV TRANSFORMER CKT 1
20SP	00NR	2	TO->FROM	G17_109	DAWSON CREEK - G17109_T(P) 230.00 230KV CKT 1	176	0.85112	192.5332	LTLMISS - RHAME 4 230.00 230KV CKT 1
20WP	16ALL	2	TO->FROM	G17_109	DAWSON CREEK - G17109_T(P) 230.00 230KV CKT 1	176	0.88055	192.4386	BEAVERHILL4 230.00 - G15098_1 230.00 230KV CKT 1
20WP	16ALL	2	TO->FROM	G17_109	DAWSON CREEK - G17109_T(P) 230.00 230KV CKT 1	176	0.88055	192.4386	G15098_1 230.00 230/34.5KV TRANSFORMER CKT 1
20WP	16ALL	2	TO->FROM	G17_109	DAWSON CREEK - G17109_T(P) 230.00 230KV CKT 1	176	0.89423	192.4182	FT PECK - WOLF POINT 115KV CKT 1
16WP	00NR	2	TO->FROM	G17_109	DAWSON CREEK - G17109_T(P) 230.00 230KV CKT 1	176	0.85095	192.2182	LTLMISS - RHAME 4 230.00 230KV CKT 1
20SP	00NR	2	TO->FROM	G17_109	DAWSON CREEK - G17109_T(P) 230.00 230KV CKT 1	176	0.85112	192.0218	BAKER - LTLMISS 230KV CKT 1
20WP	16ALL	2	TO->FROM	G17_109	DAWSON CREEK - G17109_T(P) 230.00 230KV CKT 1	176	0.88055	191.8705	DAGLUM 4230.00 - GI1414 4230.00 230KV CKT 1
16WP	00NR	2	TO->FROM	G17_109	DAWSON CREEK - G17109_T(P) 230.00 230KV CKT 1	176	0.85095	191.7068	BAKER - LTLMISS 230KV CKT 1
25SP	00NR	2	TO->FROM	G17_109	DAWSON CREEK - G17109_T(P) 230.00 230KV CKT 1	176	0.85528	191.585	DAWSON CREEK - LEWIS & CLARK 115KV CKT 1
20SP	16ALL	2	TO->FROM	G17_109	DAWSON CREEK - G17109_T(P) 230.00 230KV CKT 1	176	0.8263	191.5432	BEAVERHILL4 230.00 - DAWSON CREEK 230KV CKT 1
20WP	16ALL	2	TO->FROM	G17_109	DAWSON CREEK - G17109_T(P) 230.00 230KV CKT 1	176	0.88055	191.5295	CIRCLE - KPS12-CR7 115.00 115KV CKT 1
20WP	16ALL	2	TO->FROM	G17_109	DAWSON CREEK - G17109_T(P) 230.00 230KV CKT 1	176	0.88055	191.5295	KPS12-CR7 115.00 115/6.9KV TRANSFORMER CKT 1
20L	16ALL	2	TO->FROM	G17_109	DAWSON CREEK - G17109_T(P) 230.00 230KV CKT 1	175.8	0.87661	191.4767	COALHILL4 230.00 230/6.9KV TRANSFORMER CKT 1
20WP	16ALL	2	TO->FROM	G17_109	DAWSON CREEK - G17109_T(P) 230.00 230KV CKT 1	176	0.87806	191.3046	DAGLUM 4230.00 - RHAME 4 230.00 230KV CKT 1
20L	16NR	2	TO->FROM	G17_109	DAWSON CREEK - G17109_T(P) 230.00 230KV CKT 1	175.9	0.86658	190.6229	COALHILL4 230.00 230/6.9KV TRANSFORMER CKT 1
20WP	00NR	2	TO->FROM	G17_109	DAWSON CREEK - G17109_T(P) 230.00 230KV CKT 1	176	0.86326	190.3654	FT PECK - KPS10-FP7 115.00 115KV CKT 1
20WP	00NR	2	TO->FROM	G17_109	DAWSON CREEK - G17109_T(P) 230.00 230KV CKT 1	176	0.86326	190.3086	KPS10-FP7 115.00 115/6.9KV TRANSFORMER CKT 1
20L	16NR	2	TO->FROM	G17_109	DAWSON CREEK - G17109_T(P) 230.00 230KV CKT 1	175.9	0.93647	190.2617	CULBERTSN E7115.00 - CULBERTSON 115KV CKT 1
20L	16ALL	2	TO->FROM	G17_109	DAWSON CREEK - G17109_T(P) 230.00 230KV CKT 1	175.8	0.87661	189.884	FT PECK - KPS10-FP7 115.00 115KV CKT 1
20L	16ALL	2	TO->FROM	G17_109	DAWSON CREEK - G17109_T(P) 230.00 230KV CKT 1	175.8	0.87661	189.8271	KPS10-FP7 115.00 115/6.9KV TRANSFORMER CKT 1
16WP	00NR	2	TO->FROM	G17_109	DAWSON CREEK - G17109_T(P) 230.00 230KV CKT 1	176	0.8665	189.6477	RED CEDAR DC 115/34.5KV TRANSFORMER CKT 1
16WP	00NR	2	TO->FROM	G17_109	DAWSON CREEK - G17109_T(P) 230.00 230KV CKT 1	176	0.84427	189.64	BELFIELD - CHARLIE CREEK 345KV CKT 1
16WP	00NR	2	TO->FROM	G17_109	DAWSON CREEK - G17109_T(P) 230.00 230KV CKT 1	176	0.8665	189.4054	CULBERTSN E7115.00 - RED CEDAR DC 115KV CKT 1
20WP	16ALL	2	TO->FROM	G17_109	DAWSON CREEK - G17109_T(P) 230.00 230KV CKT 1	176	0.8644	189.2818	LTLMISS - RHAME 4 230.00 230KV CKT 1
16WP	00NR	2	TO->FROM	G17_109	DAWSON CREEK - G17109_T(P) 230.00 230KV CKT 1	176	0.86753	189.2668	CHARLIE CREEK - PATENTGATE 3345.00 345KV CKT 1
25SP	00NR	2	TO->FROM	G17_109	DAWSON CREEK - G17109_T(P) 230.00 230KV CKT 1	176	0.81264	189.1732	BELFIELD - MEDORA 230KV CKT 1
16WP	00NR	2	TO->FROM	G17_109	DAWSON CREEK - G17109_T(P) 230.00 230KV CKT 1	176	0.85516	189.12	DAWSON CREEK - LEWIS & CLARK 115KV CKT 1
20L	16NR	2	TO->FROM	G17_109	DAWSON CREEK - G17109_T(P) 230.00 230KV CKT 1	175.9	0.86658	189.0311	FT PECK - KPS10-FP7 115.00 115KV CKT 1
20L	16NR	2	TO->FROM	G17_109	DAWSON CREEK - G17109_T(P) 230.00 230KV CKT 1	175.9	0.86658	189.0311	KPS10-FP7 115.00 115/6.9KV TRANSFORMER CKT 1

SEASON	GROUP	SCENARIO	DIRECTION	SOURCE	MONITORED ELEMENT	RATE (MVA)	TDF	CONTINGENCY LOADING %	CONTINGENCY
20WP	16ALL	2	TO->FROM	G17_109	DAWSON CREEK - G17109_T(P) 230.00 230KV CKT 1	176	0.8644	188.7704	BAKER - LTLMISS 230KV CKT 1
20L	16ALL	2	TO->FROM	G17_109	DAWSON CREEK - G17109_T(P) 230.00 230KV CKT 1	175.8	0.87661	188.405	BEAVERHILL4 230.00 - G15098_1 230.00 230KV CKT 1
20L	16ALL	2	TO->FROM	G17_109	DAWSON CREEK - G17109_T(P) 230.00 230KV CKT 1	175.8	0.87661	188.405	G15098_1 230.00 230/34.5KV TRANSFORMER CKT 1
16WP	00NR	2	TO->FROM	G17_109	DAWSON CREEK - G17109_T(P) 230.00 230KV CKT 1	176	0.85516	188.3813	LEWIS & CLARK - RICHLAND 115KV CKT 1
25SP	00NR	2	TO->FROM	G17_109	DAWSON CREEK - G17109_T(P) 230.00 230KV CKT 1	176	0.81264	188.2641	BEAVERHILL4 230.00 - DAWSON CREEK 230KV CKT 1
25SP	00NR	2	TO->FROM	G17_109	DAWSON CREEK - G17109_T(P) 230.00 230KV CKT 1	176	0.81264	188.1505	BEAVERHILL4 230.00 - MEDORA 230KV CKT 1
20L	16ALL	2	TO->FROM	G17_109	DAWSON CREEK - G17109_T(P) 230.00 230KV CKT 1	175.8	0.87661	187.8931	DAGLUM 4230.00 - GI1414 4230.00 230KV CKT 1
20WP	00NR	2	TO->FROM	G17_109	DAWSON CREEK - G17109_T(P) 230.00 230KV CKT 1	176	0.86022	187.8241	CIRCLE - DAWSON CREEK 115KV CKT 1
20SP	00NR	2	TO->FROM	G17_109	DAWSON CREEK - G17109_T(P) 230.00 230KV CKT 1	176	0.81259	187.8005	BELFIELD - MEDORA 230KV CKT 1
20L	16ALL	2	TO->FROM	G17_109	DAWSON CREEK - G17109_T(P) 230.00 230KV CKT 1	175.8	0.87787	187.4949	JUDSON 3345.00 - PATENTGATE 3345.00 345KV CKT 1
20L	16ALL	2	TO->FROM	G17_109	DAWSON CREEK - G17109_T(P) 230.00 230KV CKT 1	175.8	0.87412	187.4403	DAGLUM 4230.00 - RHAME 4 230.00 230KV CKT 1
20SP	00NR	2	TO->FROM	G17_109	DAWSON CREEK - G17109_T(P) 230.00 230KV CKT 1	176	0.81259	187.1186	BEAVERHILL4 230.00 - DAWSON CREEK 230KV CKT 1
20L	16NR	2	TO->FROM	G17_109	DAWSON CREEK - G17109_T(P) 230.00 230KV CKT 1	175.9	0.86658	187.0413	BEAVERHILL4 230.00 - G15098_1 230.00 230KV CKT 1
20L	16NR	2	TO->FROM	G17_109	DAWSON CREEK - G17109_T(P) 230.00 230KV CKT 1	175.9	0.86658	187.0413	G15098_1 230.00 230/34.5KV TRANSFORMER CKT 1
20SP	00NR	2	TO->FROM	G17_109	DAWSON CREEK - G17109_T(P) 230.00 230KV CKT 1	176	0.81259	186.8345	BEAVERHILL4 230.00 - MEDORA 230KV CKT 1
20L	16NR	2	TO->FROM	G17_109	DAWSON CREEK - G17109_T(P) 230.00 230KV CKT 1	175.9	0.86658	186.8139	DAGLUM 4230.00 - GI1414 4230.00 230KV CKT 1
20L	16NR	2	TO->FROM	G17_109	DAWSON CREEK - G17109_T(P) 230.00 230KV CKT 1	175.9	0.86383	186.541	DAGLUM 4230.00 - RHAME 4 230.00 230KV CKT 1
20WP	00NR	2	TO->FROM	G17_109	DAWSON CREEK - G17109_T(P) 230.00 230KV CKT 1	176	0.87781	186.5336	FT PECK - WOLF POINT 115KV CKT 2
20WP	00NR	2	TO->FROM	G17_109	DAWSON CREEK - G17109_T(P) 230.00 230KV CKT 1	176	0.8769	186.2545	FT PECK - WOLF POINT 115KV CKT 1
20WP	00NR	2	TO->FROM	G17_109	DAWSON CREEK - G17109_T(P) 230.00 230KV CKT 1	176	0.86326	186.1609	CIRCLE - KPS12-CR7 115.00 115KV CKT 1
20WP	00NR	2	TO->FROM	G17_109	DAWSON CREEK - G17109_T(P) 230.00 230KV CKT 1	176	0.86326	186.1041	KPS12-CR7 115.00 115/6.9KV TRANSFORMER CKT 1
20WP	16ALL	2	TO->FROM	G17_109	DAWSON CREEK - G17109_T(P) 230.00 230KV CKT 1	176	0.8255	185.85	BEAVERHILL4 230.00 - DAWSON CREEK 230KV CKT 1
16WP	00NR	2	TO->FROM	G17_109	DAWSON CREEK - G17109_T(P) 230.00 230KV CKT 1	176	0.81241	185.8359	BELFIELD - MEDORA 230KV CKT 1
16WP	00NR	2	TO->FROM	G17_109	DAWSON CREEK - G17109_T(P) 230.00 230KV CKT 1	176	0.81241	185.0973	BEAVERHILL4 230.00 - DAWSON CREEK 230KV CKT 1
16WP	00NR	2	TO->FROM	G17_109	DAWSON CREEK - G17109_T(P) 230.00 230KV CKT 1	176	0.81241	184.7564	BEAVERHILL4 230.00 - MEDORA 230KV CKT 1
20WP	00NR	2	TO->FROM	G17_109	DAWSON CREEK - G17109_T(P) 230.00 230KV CKT 1	176	0.84787	184.6127	LTLMISS - RHAME 4 230.00 230KV CKT 1
20L	16ALL	2	TO->FROM	G17_109	DAWSON CREEK - G17109_T(P) 230.00 230KV CKT 1	175.8	0.87794	184.2093	CHAR.CK4 230.00 - WATFORD 230KV CKT 1
20WP	00NR	2	TO->FROM	G17_109	DAWSON CREEK - G17109_T(P) 230.00 230KV CKT 1	176	0.84787	184.1582	BAKER - LTLMISS 230KV CKT 1
20WP	00NR	2	TO->FROM	G17_109	DAWSON CREEK - G17109_T(P) 230.00 230KV CKT 1	176	0.84114	183.73	BELFIELD - CHARLIE CREEK 345KV CKT 1
20L	16ALL	2	TO->FROM	G17_109	DAWSON CREEK - G17109_T(P) 230.00 230KV CKT 1	175.8	0.86055	183.727	BAKER - LTLMISS 230KV CKT 1
20L	16ALL	2	TO->FROM	G17_109	DAWSON CREEK - G17109_T(P) 230.00 230KV CKT 1	175.8	0.87252	183.6814	BOWMAN - RHAME 4 230.00 230KV CKT 1
20L	16ALL	2	TO->FROM	G17_109	DAWSON CREEK - G17109_T(P) 230.00 230KV CKT 1	175.8	0.86543	183.6428	LEWIS & CLARK - RICHLAND 115KV CKT 1
20L	16NR	2	TO->FROM	G17_109	DAWSON CREEK - G17109_T(P) 230.00 230KV CKT 1	175.9	0.85103	182.9048	BAKER - LTLMISS 230KV CKT 1
20L	16NR	2	TO->FROM	G17_109	DAWSON CREEK - G17109_T(P) 230.00 230KV CKT 1	175.9	0.86383	182.9026	BELFIELD - DAGLUM 4230.00 230KV CKT 1
20L	16NR	2	TO->FROM	G17_109	DAWSON CREEK - G17109_T(P) 230.00 230KV CKT 1	175.9	0.86296	182.858	BOWMAN - RHAME 4 230.00 230KV CKT 1
20L	16NR	2	TO->FROM	G17_109	DAWSON CREEK - G17109_T(P) 230.00 230KV CKT 1	175.9	0.85533	182.5501	DAWSON CREEK - LEWIS & CLARK 115KV CKT 1
20L	16NR	2	TO->FROM	G17_109	DAWSON CREEK - G17109_T(P) 230.00 230KV CKT 1	175.9	0.84411	182.4987	BELFIELD - CHARLIE CREEK 345KV CKT 1
20L	16ALL	2	TO->FROM	G17_109	DAWSON CREEK - G17109_T(P) 230.00 230KV CKT 1	175.8	0.82179	182.0341	BEAVERHILL4 230.00 - DAWSON CREEK 230KV CKT 1
20WP	00NR	2	TO->FROM	G17_109	DAWSON CREEK - G17109_T(P) 230.00 230KV CKT 1	176	0.85186	181.8154	DAWSON CREEK - LEWIS & CLARK 115KV CKT 1
20L	16NR	2	TO->FROM	G17_109	DAWSON CREEK - G17109_T(P) 230.00 230KV CKT 1	175.9	0.81224	180.6236	BEAVERHILL4 230.00 - DAWSON CREEK 230KV CKT 1
20WP	00NR	2	TO->FROM	G17_109	DAWSON CREEK - G17109_T(P) 230.00 230KV CKT 1	176	0.8096	179.9841	BELFIELD - MEDORA 230KV CKT 1
20WP	00NR	2	TO->FROM	G17_109	DAWSON CREEK - G17109_T(P) 230.00 230KV CKT 1	176	0.8096	178.9045	BEAVERHILL4 230.00 - DAWSON CREEK 230KV CKT 1
20WP	00NR	2	TO->FROM	G17_109	DAWSON CREEK - G17109_T(P) 230.00 230KV CKT 1	176	0.8096	178.7909	BEAVERHILL4 230.00 - MEDORA 230KV CKT 1
17G	16ALL	2	FROM->TO	G17_109	DAWSON CREEK - LEWIS & CLARK 115KV CKT 1	100.9	0.26629	133.3241	BEAVERHILL4 230.00 - MEDORA 230KV CKT 1
17G	16ALL	2	FROM->TO	G17_109	DAWSON CREEK - LEWIS & CLARK 115KV CKT 1	100.9	0.26629	129.6571	BELFIELD - MEDORA 230KV CKT 1
17G	16NR	2	FROM->TO	G17_109	DAWSON CREEK - LEWIS & CLARK 115KV CKT 1	101	0.26342	119.1034	BEAVERHILL4 230.00 - MEDORA 230KV CKT 1
17SP	16ALL	2	FROM->TO	G17_109	DAWSON CREEK - LEWIS & CLARK 115KV CKT 1	101	0.26676	116.4515	BEAVERHILL4 230.00 - MEDORA 230KV CKT 1
17G	16NR	2	FROM->TO	G17_109	DAWSON CREEK - LEWIS & CLARK 115KV CKT 1	101	0.26342	115.44	BELFIELD - MEDORA 230KV CKT 1
17SP	16ALL	2	FROM->TO	G17_109	DAWSON CREEK - LEWIS & CLARK 115KV CKT 1	101	0.26676	112.6891	BELFIELD - MEDORA 230KV CKT 1
17G	16ALL	2	FROM->TO	G17_109	DAWSON CREEK - LEWIS & CLARK 115KV CKT 1	100.9	0.26629	110.331	BEAVERHILL4 230.00 - DAWSON CREEK 230KV CKT 1
17G	16NR	2	FROM->TO	G17_109	DAWSON CREEK - LEWIS & CLARK 115KV CKT 1	101	0.16875	105.2475	CULBERTSN E7115.00 - WILISTON 115KV CKT 1
16WP	16ALL	2	FROM->TO	G17_109	DAWSON CREEK - LEWIS & CLARK 115KV CKT 1	124	0.2665	101.6226	BEAVERHILL4 230.00 - MEDORA 230KV CKT 1
17G	16NR	2	FROM->TO	G17_109	DAWSON CREEK - LEWIS & CLARK 115KV CKT 1	101	0.26342	101.2816	BEAVERHILL4 230.00 - DAWSON CREEK 230KV CKT 1

SEASON	GROUP	SCENARIO	DIRECTION	SOURCE	MONITORED ELEMENT	RATE (MVA)	TDF	CONTINGENCY LOADING %	CONTINGENCY
20L	16NR	2	TO->FROM	G17_109	ELK CREEK - NEWELL 115KV CKT 1	89.3	0.04817	101.6958	MAURINE - NUNDRWD-LNX3230.00 230KV CKT 1
20L	16NR	2	TO->FROM	G17_109	ELK CREEK - NEWELL 115KV CKT 1	89.3	0.04817	101.6958	NUNDRWD - NUNDRWD-LNX3230.00 230KV CKT Z
17SP	16ALL	2	FROM->TO	G17_109	FT PECK - WOLF POINT 115KV CKT 1	119.9	0.48898	173.2477	DAWSON CREEK - G17109_T(P) 230.00 230KV CKT 1
17G	16ALL	2	FROM->TO	G17_109	FT PECK - WOLF POINT 115KV CKT 1	120	0.48797	171.1833	DAWSON CREEK - G17109_T(P) 230.00 230KV CKT 1
16WP	16ALL	2	FROM->TO	G17_109	FT PECK - WOLF POINT 115KV CKT 1	120	0.48835	169.4767	DAWSON CREEK - G17109_T(P) 230.00 230KV CKT 1
17G	16NR	2	FROM->TO	G17_109	FT PECK - WOLF POINT 115KV CKT 1	120	0.47664	167.854	DAWSON CREEK - G17109_T(P) 230.00 230KV CKT 1
17SP	00NR	2	FROM->TO	G17_109	FT PECK - WOLF POINT 115KV CKT 1	120	0.47929	165.894	DAWSON CREEK - G17109_T(P) 230.00 230KV CKT 1
16WP	00NR	2	FROM->TO	G17_109	FT PECK - WOLF POINT 115KV CKT 1	120	0.47933	159.4047	DAWSON CREEK - G17109_T(P) 230.00 230KV CKT 1
25SP	16ALL	2	FROM->TO	G17_109	FT PECK - WOLF POINT 115KV CKT 1	119.9	0.48917	156.9641	DAWSON CREEK - G17109_T(P) 230.00 230KV CKT 1
20SP	16ALL	2	FROM->TO	G17_109	FT PECK - WOLF POINT 115KV CKT 1	119.9	0.48906	156.7607	DAWSON CREEK - G17109_T(P) 230.00 230KV CKT 1
20WP	16ALL	2	FROM->TO	G17_109	FT PECK - WOLF POINT 115KV CKT 1	120	0.48849	152.8567	DAWSON CREEK - G17109_T(P) 230.00 230KV CKT 1
20SP	00NR	2	FROM->TO	G17_109	FT PECK - WOLF POINT 115KV CKT 1	119.9	0.47983	150.6636	DAWSON CREEK - G17109_T(P) 230.00 230KV CKT 1
25SP	00NR	2	FROM->TO	G17_109	FT PECK - WOLF POINT 115KV CKT 1	119.9	0.47985	150.5855	DAWSON CREEK - G17109_T(P) 230.00 230KV CKT 1
20WP	00NR	2	FROM->TO	G17_109	FT PECK - WOLF POINT 115KV CKT 1	119.9	0.47984	144.4944	DAWSON CREEK - G17109_T(P) 230.00 230KV CKT 1
20L	16ALL	2	FROM->TO	G17_109	FT PECK - WOLF POINT 115KV CKT 1	120	0.48594	141.34	DAWSON CREEK - G17109_T(P) 230.00 230KV CKT 1
20L	16NR	2	FROM->TO	G17_109	FT PECK - WOLF POINT 115KV CKT 1	120	0.47986	138.9627	DAWSON CREEK - G17109_T(P) 230.00 230KV CKT 1
17SP	16ALL	2	FROM->TO	G17_109	FT PECK - WOLF POINT 115KV CKT 2	128	0.50721	168.7125	DAWSON CREEK - G17109_T(P) 230.00 230KV CKT 1
17G	16ALL	2	FROM->TO	G17_109	FT PECK - WOLF POINT 115KV CKT 2	128	0.50616	166.5094	DAWSON CREEK - G17109_T(P) 230.00 230KV CKT 1
17G	16NR	2	FROM->TO	G17_109	FT PECK - WOLF POINT 115KV CKT 2	128	0.49441	163.3681	DAWSON CREEK - G17109_T(P) 230.00 230KV CKT 1
17SP	00NR	2	FROM->TO	G17_109	FT PECK - WOLF POINT 115KV CKT 2	128	0.49716	161.8681	DAWSON CREEK - G17109_T(P) 230.00 230KV CKT 1
16WP	16ALL	2	FROM->TO	G17_109	FT PECK - WOLF POINT 115KV CKT 2	132	0.50656	159.9182	DAWSON CREEK - G17109_T(P) 230.00 230KV CKT 1
25SP	16ALL	2	FROM->TO	G17_109	FT PECK - WOLF POINT 115KV CKT 2	127.9	0.50741	153.5043	DAWSON CREEK - G17109_T(P) 230.00 230KV CKT 1
20SP	16ALL	2	FROM->TO	G17_109	FT PECK - WOLF POINT 115KV CKT 2	127.9	0.50729	153.2322	DAWSON CREEK - G17109_T(P) 230.00 230KV CKT 1
16WP	00NR	2	FROM->TO	G17_109	FT PECK - WOLF POINT 115KV CKT 2	132	0.4972	150.3818	DAWSON CREEK - G17109_T(P) 230.00 230KV CKT 1
20SP	00NR	2	FROM->TO	G17_109	FT PECK - WOLF POINT 115KV CKT 2	127.9	0.49772	147.514	DAWSON CREEK - G17109_T(P) 230.00 230KV CKT 1
25SP	00NR	2	FROM->TO	G17_109	FT PECK - WOLF POINT 115KV CKT 2	127.9	0.49775	147.4433	DAWSON CREEK - G17109_T(P) 230.00 230KV CKT 1
20WP	16ALL	2	FROM->TO	G17_109	FT PECK - WOLF POINT 115KV CKT 2	132	0.5067	144.6576	DAWSON CREEK - G17109_T(P) 230.00 230KV CKT 1
20L	16ALL	2	FROM->TO	G17_109	FT PECK - WOLF POINT 115KV CKT 2	128	0.50405	138.1938	DAWSON CREEK - G17109_T(P) 230.00 230KV CKT 1
20WP	00NR	2	FROM->TO	G17_109	FT PECK - WOLF POINT 115KV CKT 2	131.9	0.49773	137.1293	DAWSON CREEK - G17109_T(P) 230.00 230KV CKT 1
20L	16NR	2	FROM->TO	G17_109	FT PECK - WOLF POINT 115KV CKT 2	128	0.49775	136	DAWSON CREEK - G17109_T(P) 230.00 230KV CKT 1
17SP	16ALL	2	FROM->TO	G17_109	FT PECK 230/115KV TRANSFORMER CKT 1	100	0.99739	390.556	DAWSON CREEK - G17109_T(P) 230.00 230KV CKT 1
17G	16ALL	2	FROM->TO	G17_109	FT PECK 230/115KV TRANSFORMER CKT 1	100	0.99598	387.092	DAWSON CREEK - G17109_T(P) 230.00 230KV CKT 1
16WP	16ALL	2	FROM->TO	G17_109	FT PECK 230/115KV TRANSFORMER CKT 1	100	0.99652	384.308	DAWSON CREEK - G17109_T(P) 230.00 230KV CKT 1
17G	16NR	2	FROM->TO	G17_109	FT PECK 230/115KV TRANSFORMER CKT 1	100	0.98034	381.6088	DAWSON CREEK - G17109_T(P) 230.00 230KV CKT 1
17SP	00NR	2	FROM->TO	G17_109	FT PECK 230/115KV TRANSFORMER CKT 1	100	0.984	378.68	DAWSON CREEK - G17109_T(P) 230.00 230KV CKT 1
25SP	16ALL	2	FROM->TO	G17_109	FT PECK 230/115KV TRANSFORMER CKT 1	100	0.99766	370.964	DAWSON CREEK - G17109_T(P) 230.00 230KV CKT 1
20SP	16ALL	2	FROM->TO	G17_109	FT PECK 230/115KV TRANSFORMER CKT 1	100	0.99751	370.604	DAWSON CREEK - G17109_T(P) 230.00 230KV CKT 1
16WP	00NR	2	FROM->TO	G17_109	FT PECK 230/115KV TRANSFORMER CKT 1	100	0.98407	367.6024	DAWSON CREEK - G17109_T(P) 230.00 230KV CKT 1
20WP	16ALL	2	FROM->TO	G17_109	FT PECK 230/115KV TRANSFORMER CKT 1	100	0.99671	364.184	DAWSON CREEK - G17109_T(P) 230.00 230KV CKT 1
20L	16ALL	2	FROM->TO	G17_109	FT PECK 230/115KV TRANSFORMER CKT 1	99.7	0.98999	361.0793	DAWSON CREEK - G17109_T(P) 230.00 230KV CKT 1
20SP	00NR	2	FROM->TO	G17_109	FT PECK 230/115KV TRANSFORMER CKT 1	100	0.98476	360.7232	DAWSON CREEK - G17109_T(P) 230.00 230KV CKT 1
25SP	00NR	2	FROM->TO	G17_109	FT PECK 230/115KV TRANSFORMER CKT 1	100	0.98479	360.5328	DAWSON CREEK - G17109_T(P) 230.00 230KV CKT 1
20L	16NR	2	FROM->TO	G17_109	FT PECK 230/115KV TRANSFORMER CKT 1	99.7	0.97761	355.4014	DAWSON CREEK - G17109_T(P) 230.00 230KV CKT 1
20WP	00NR	2	FROM->TO	G17_109	FT PECK 230/115KV TRANSFORMER CKT 1	100	0.98478	350.4296	DAWSON CREEK - G17109_T(P) 230.00 230KV CKT 1
17SP	13ALL	2	FROM->TO	G17_109	FT PECK 230/115KV TRANSFORMER CKT 1	100	0.99758	131.9766	DAWSON CREEK - G17109_T(P) 230.00 230KV CKT 1
16WP	13ALL	2	FROM->TO	G17_109	FT PECK 230/115KV TRANSFORMER CKT 1	100	0.99673	127.8822	DAWSON CREEK - G17109_T(P) 230.00 230KV CKT 1
17G	13ALL	2	FROM->TO	G17_109	FT PECK 230/115KV TRANSFORMER CKT 1	100	0.99647	126.6616	DAWSON CREEK - G17109_T(P) 230.00 230KV CKT 1
25SP	13ALL	2	FROM->TO	G17_109	FT PECK 230/115KV TRANSFORMER CKT 1	100	0.99779	113.0741	DAWSON CREEK - G17109_T(P) 230.00 230KV CKT 1
20SP	13ALL	2	FROM->TO	G17_109	FT PECK 230/115KV TRANSFORMER CKT 1	100	0.99765	112.9091	DAWSON CREEK - G17109_T(P) 230.00 230KV CKT 1
20WP	13ALL	2	FROM->TO	G17_109	FT PECK 230/115KV TRANSFORMER CKT 1	100	0.99686	108.3426	DAWSON CREEK - G17109_T(P) 230.00 230KV CKT 1
17SP	00NR	2	FROM->TO	G17_109	FT THOMPSON (FT2 KU1A) 345/230/13.8KV TRANSFORMER CKT 1	300.1	0.03263	142.8329	GR ISLD-LNX3345.00 - GRAND ISLAND 345KV CKT Z
17SP	00NR	2	FROM->TO	G17_109	FT THOMPSON (FT2 KU1A) 345/230/13.8KV TRANSFORMER CKT 1	300.1	0.03263	142.8329	GR ISLD-LNX3345.00 - HOLT.CO3 345.00 345KV CKT 1
17SP	00NR	2	FROM->TO	G17_109	FT THOMPSON (FT2 KU1A) 345/230/13.8KV TRANSFORMER CKT 1	301	0.03263	142.4058	GR ISLD-LNX3345.00 - GRAND ISLAND 345KV CKT Z

SEASON	GROUP	SCENARIO	DIRECTION	SOURCE	MONITORED ELEMENT	RATE (MVA)	TDF	CONTINGENCY LOADING %	CONTINGENCY
17SP	00NR	2	FROM->TO	G17_109	FT THOMPSON (FT2 KU1A) 345/230/13.8KV TRANSFORMER CKT 1	301	0.03263	142.4058	GR ISLD-LNX3345.00 - HOLT.CO3 345.00 345KV CKT 1
16WP	00NR	2	FROM->TO	G17_109	FT THOMPSON (FT2 KU1A) 345/230/13.8KV TRANSFORMER CKT 1	309.2	0.03248	125.3537	GR ISLD-LNX3345.00 - GRAND ISLAND 345KV CKT Z
16WP	00NR	2	FROM->TO	G17_109	FT THOMPSON (FT2 KU1A) 345/230/13.8KV TRANSFORMER CKT 1	309.2	0.03248	125.3537	GR ISLD-LNX3345.00 - HOLT.CO3 345.00 345KV CKT 1
16WP	00NR	2	FROM->TO	G17_109	FT THOMPSON (FT2 KU1A) 345/230/13.8KV TRANSFORMER CKT 1	309.5	0.03248	125.2322	GR ISLD-LNX3345.00 - GRAND ISLAND 345KV CKT Z
16WP	00NR	2	FROM->TO	G17_109	FT THOMPSON (FT2 KU1A) 345/230/13.8KV TRANSFORMER CKT 1	309.5	0.03248	125.2322	GR ISLD-LNX3345.00 - HOLT.CO3 345.00 345KV CKT 1
17SP	00NR	2	FROM->TO	G17_109	FT THOMPSON (FT2 KU1A) 345/230/13.8KV TRANSFORMER CKT 1	300.1	0.03263	106.3118	GRPRAR1-LNX3345.00 - YANKTON 345KV CKT Z
17SP	00NR	2	FROM->TO	G17_109	FT THOMPSON (FT2 KU1A) 345/230/13.8KV TRANSFORMER CKT 1	301	0.03263	106.0271	GRPRAR1-LNX3345.00 - YANKTON 345KV CKT Z
17SP	00NR	2	FROM->TO	G17_109	FT THOMPSON (FT2 KU1A) 345/230/13.8KV TRANSFORMER CKT 1	300.1	0.03263	105.512	GRPRAR1-LNX3345.00 - HOLT.CO3 345.00 345KV CKT 1
17SP	00NR	2	FROM->TO	G17_109	FT THOMPSON (FT2 KU1A) 345/230/13.8KV TRANSFORMER CKT 1	301	0.03263	105.2298	GRPRAR1-LNX3345.00 - HOLT.CO3 345.00 345KV CKT 1
20SP	00NR	2	FROM->TO	G17_109	FT THOMPSON (FT2 KU1A) 345/230/13.8KV TRANSFORMER CKT 1	302.8	0.03238	103.2568	GRPRAR1-LNX3345.00 - YANKTON 345KV CKT Z
20SP	00NR	2	FROM->TO	G17_109	FT THOMPSON (FT2 KU1A) 345/230/13.8KV TRANSFORMER CKT 1	303.3	0.03238	103.1196	GRPRAR1-LNX3345.00 - YANKTON 345KV CKT Z
25SP	00NR	2	FROM->TO	G17_109	FT THOMPSON (FT2 KU1A) 345/230/13.8KV TRANSFORMER CKT 1	303.3	0.0324	102.3304	GRPRAR1-LNX3345.00 - YANKTON 345KV CKT Z
20SP	00NR	2	FROM->TO	G17_109	FT THOMPSON (FT2 KU1A) 345/230/13.8KV TRANSFORMER CKT 1	302.8	0.03238	102.2	GRPRAR1-LNX3345.00 - HOLT.CO3 345.00 345KV CKT 1
25SP	00NR	2	FROM->TO	G17_109	FT THOMPSON (FT2 KU1A) 345/230/13.8KV TRANSFORMER CKT 1	303.7	0.0324	102.1956	GRPRAR1-LNX3345.00 - YANKTON 345KV CKT Z
20SP	00NR	2	FROM->TO	G17_109	FT THOMPSON (FT2 KU1A) 345/230/13.8KV TRANSFORMER CKT 1	303.3	0.03238	102.0315	GRPRAR1-LNX3345.00 - HOLT.CO3 345.00 345KV CKT 1
25SP	00NR	2	FROM->TO	G17_109	FT THOMPSON (FT2 KU1A) 345/230/13.8KV TRANSFORMER CKT 1	303.3	0.0324	101.2753	GRPRAR1-LNX3345.00 - HOLT.CO3 345.00 345KV CKT 1
25SP	00NR	2	FROM->TO	G17_109	FT THOMPSON (FT2 KU1A) 345/230/13.8KV TRANSFORMER CKT 1	303.7	0.0324	101.1748	GRPRAR1-LNX3345.00 - HOLT.CO3 345.00 345KV CKT 1
17SP	00NR	2	FROM->TO	G17_109	FT THOMPSON (FT2 KU1B) 345/230/13.8KV TRANSFORMER CKT 1	300.1	0.03268	143.0382	GR ISLD-LNX3345.00 - GRAND ISLAND 345KV CKT Z
17SP	00NR	2	FROM->TO	G17_109	FT THOMPSON (FT2 KU1B) 345/230/13.8KV TRANSFORMER CKT 1	300.1	0.03268	143.0382	GR ISLD-LNX3345.00 - HOLT.CO3 345.00 345KV CKT 1
17SP	00NR	2	FROM->TO	G17_109	FT THOMPSON (FT2 KU1B) 345/230/13.8KV TRANSFORMER CKT 1	301	0.03268	142.6105	GR ISLD-LNX3345.00 - GRAND ISLAND 345KV CKT Z
17SP	00NR	2	FROM->TO	G17_109	FT THOMPSON (FT2 KU1B) 345/230/13.8KV TRANSFORMER CKT 1	301	0.03268	142.6105	GR ISLD-LNX3345.00 - HOLT.CO3 345.00 345KV CKT 1
16WP	00NR	2	FROM->TO	G17_109	FT THOMPSON (FT2 KU1B) 345/230/13.8KV TRANSFORMER CKT 1	309.2	0.03253	125.5206	GR ISLD-LNX3345.00 - GRAND ISLAND 345KV CKT Z
16WP	00NR	2	FROM->TO	G17_109	FT THOMPSON (FT2 KU1B) 345/230/13.8KV TRANSFORMER CKT 1	309.2	0.03253	125.5206	GR ISLD-LNX3345.00 - HOLT.CO3 345.00 345KV CKT 1
16WP	00NR	2	FROM->TO	G17_109	FT THOMPSON (FT2 KU1B) 345/230/13.8KV TRANSFORMER CKT 1	309.4	0.03253	125.4717	GR ISLD-LNX3345.00 - GRAND ISLAND 345KV CKT Z
16WP	00NR	2	FROM->TO	G17_109	FT THOMPSON (FT2 KU1B) 345/230/13.8KV TRANSFORMER CKT 1	309.4	0.03253	125.4717	GR ISLD-LNX3345.00 - HOLT.CO3 345.00 345KV CKT 1
17SP	00NR	2	FROM->TO	G17_109	FT THOMPSON (FT2 KU1B) 345/230/13.8KV TRANSFORMER CKT 1	300.1	0.03268	106.4504	GRPRAR1-LNX3345.00 - YANKTON 345KV CKT Z
17SP	00NR	2	FROM->TO	G17_109	FT THOMPSON (FT2 KU1B) 345/230/13.8KV TRANSFORMER CKT 1	301	0.03268	106.1653	GRPRAR1-LNX3345.00 - YANKTON 345KV CKT Z
17SP	00NR	2	FROM->TO	G17_109	FT THOMPSON (FT2 KU1B) 345/230/13.8KV TRANSFORMER CKT 1	300.1	0.03268	105.684	GRPRAR1-LNX3345.00 - HOLT.CO3 345.00 345KV CKT 1
17SP	00NR	2	FROM->TO	G17_109	FT THOMPSON (FT2 KU1B) 345/230/13.8KV TRANSFORMER CKT 1	301	0.03268	105.368	GRPRAR1-LNX3345.00 - HOLT.CO3 345.00 345KV CKT 1
20SP	00NR	2	FROM->TO	G17_109	FT THOMPSON (FT2 KU1B) 345/230/13.8KV TRANSFORMER CKT 1	302.8	0.03243	103.3942	GRPRAR1-LNX3345.00 - YANKTON 345KV CKT Z
20SP	00NR	2	FROM->TO	G17_109	FT THOMPSON (FT2 KU1B) 345/230/13.8KV TRANSFORMER CKT 1	303.2	0.03243	103.2908	GRPRAR1-LNX3345.00 - YANKTON 345KV CKT Z
25SP	00NR	2	FROM->TO	G17_109	FT THOMPSON (FT2 KU1B) 345/230/13.8KV TRANSFORMER CKT 1	303.2	0.03245	102.5013	GRPRAR1-LNX3345.00 - YANKTON 345KV CKT Z
25SP	00NR	2	FROM->TO	G17_109	FT THOMPSON (FT2 KU1B) 345/230/13.8KV TRANSFORMER CKT 1	303.6	0.03245	102.3663	GRPRAR1-LNX3345.00 - YANKTON 345KV CKT Z
20SP	00NR	2	FROM->TO	G17_109	FT THOMPSON (FT2 KU1B) 345/230/13.8KV TRANSFORMER CKT 1	302.8	0.03243	102.3374	GRPRAR1-LNX3345.00 - HOLT.CO3 345.00 345KV CKT 1
20SP	00NR	2	FROM->TO	G17_109	FT THOMPSON (FT2 KU1B) 345/230/13.8KV TRANSFORMER CKT 1	303.2	0.03243	102.2354	GRPRAR1-LNX3345.00 - HOLT.CO3 345.00 345KV CKT 1
25SP	00NR	2	FROM->TO	G17_109	FT THOMPSON (FT2 KU1B) 345/230/13.8KV TRANSFORMER CKT 1	303.2	0.03245	101.4459	GRPRAR1-LNX3345.00 - HOLT.CO3 345.00 345KV CKT 1
25SP	00NR	2	FROM->TO	G17_109	FT THOMPSON (FT2 KU1B) 345/230/13.8KV TRANSFORMER CKT 1	303.6	0.03245	101.3452	GRPRAR1-LNX3345.00 - HOLT.CO3 345.00 345KV CKT 1
17SP	16ALL	2	TO->FROM	G17_109	G12_012IST 115.00 - WOLF POINT 115KV CKT 1	78.5	0.43912	199.4446	DAWSON CREEK - G17109_T(P) 230.00 230KV CKT 1
17SP	00NR	2	TO->FROM	G17_109	G12_012IST 115.00 - WOLF POINT 115KV CKT 1	78.6	0.42842	197.0667	DAWSON CREEK - G17109_T(P) 230.00 230KV CKT 1
17G	16NR	2	TO->FROM	G17_109	G12_012IST 115.00 - WOLF POINT 115KV CKT 1	78.4	0.42703	196.3643	DAWSON CREEK - G17109_T(P) 230.00 230KV CKT 1
25SP	16ALL	2	TO->FROM	G17_109	G12_012IST 115.00 - WOLF POINT 115KV CKT 1	78.7	0.43911	196.1576	DAWSON CREEK - G17109_T(P) 230.00 230KV CKT 1
17G	16ALL	2	TO->FROM	G17_109	G12_012IST 115.00 - WOLF POINT 115KV CKT 1	78.8	0.43827	195.7208	DAWSON CREEK - G17109_T(P) 230.00 230KV CKT 1
20SP	16ALL	2	TO->FROM	G17_109	G12_012IST 115.00 - WOLF POINT 115KV CKT 1	78.6	0.43899	188.8397	DAWSON CREEK - G17109_T(P) 230.00 230KV CKT 1
25SP	00NR	2	TO->FROM	G17_109	G12_012IST 115.00 - WOLF POINT 115KV CKT 1	78.7	0.42835	187.5121	DAWSON CREEK - G17109_T(P) 230.00 230KV CKT 1
20SP	00NR	2	TO->FROM	G17_109	G12_012IST 115.00 - WOLF POINT 115KV CKT 1	78.7	0.42832	186.2292	DAWSON CREEK - G17109_T(P) 230.00 230KV CKT 1
20L	16ALL	2	TO->FROM	G17_109	G12_012IST 115.00 - WOLF POINT 115KV CKT 1	78.5	0.43619	171.6025	DAWSON CREEK - G17109_T(P) 230.00 230KV CKT 1
20L	16NR	2	TO->FROM	G17_109	G12_012IST 115.00 - WOLF POINT 115KV CKT 1	78.5	0.42959	171.5526	DAWSON CREEK - G17109_T(P) 230.00 230KV CKT 1
16WP	16ALL	2	TO->FROM	G17_109	G12_012IST 115.00 - WOLF POINT 115KV CKT 1	87.5	0.43854	171.3554	DAWSON CREEK - G17109_T(P) 230.00 230KV CKT 1
20WP	16ALL	2	TO->FROM	G17_109	G12_012IST 115.00 - WOLF POINT 115KV CKT 1	87.5	0.43838	164.6674	DAWSON CREEK - G17109_T(P) 230.00 230KV CKT 1
20WP	00NR	2	TO->FROM	G17_109	G12_012IST 115.00 - WOLF POINT 115KV CKT 1	87.6	0.42462	158.0804	DAWSON CREEK - G17109_T(P) 230.00 230KV CKT 1
16WP	00NR	2	TO->FROM	G17_109	G12_012IST 115.00 - WOLF POINT 115KV CKT 1	87.3	0.42847	154.0783	DAWSON CREEK - G17109_T(P) 230.00 230KV CKT 1
20L	16NR	2	FROM->TO	G17_109	G14_001IST 115.00 - NEWELL 115KV CKT 1	88.4	0.04817	109.7448	MAURINE - NUNDRWD-LNX3230.00 230KV CKT 1
20L	16NR	2	FROM->TO	G17_109	G14_001IST 115.00 - NEWELL 115KV CKT 1	88.4	0.04817	109.7448	NUNDRWD - NUNDRWD-LNX3230.00 230KV CKT Z

SEASON	GROUP	SCENARIO	DIRECTION	SOURCE	MONITORED ELEMENT	RATE (MVA)	TDF	CONTINGENCY LOADING %	CONTINGENCY
17G	16NR	2	TO->FROM	G17_109	GARRISON - STANTONTAP 7115.00 115KV CKT 1	121	0.04535	106.7041	CENTER - COYOTE 345KV CKT 1
16WP	00NR	2	TO->FROM	G17_109	GARRISON - STANTONTAP 7115.00 115KV CKT 1	132	0.04242	105.1321	CENTER - COYOTE 345KV CKT 1
20WP	00NR	2	TO->FROM	G17_109	GARRISON - STANTONTAP 7115.00 115KV CKT 1	132	0.03987	103.8321	CENTER - COYOTE 345KV CKT 1
20L	16NR	2	TO->FROM	G17_109	GLENHAM - L3 HAWDON 230KV CKT 1	209.8	0.03326	110.2684	FT THOMPSON - FTTHOM1-LNX3345.00 345KV CKT Z
20L	16NR	2	TO->FROM	G17_109	GLENHAM - L3 HAWDON 230KV CKT 1	209.8	0.03326	110.2684	FTTHOM1-LNX3345.00 - G16-017-TAP 345.00 345KV CKT 1
20L	16NR	2	TO->FROM	G17_109	GLENHAM - L3 HAWDON 230KV CKT 1	209.8	0.03326	108.9338	P12:345:UMZB:# 108 #: LOS FT IN ND. LOS FT
20L	16NR	2	TO->FROM	G17_109	GLENHAM - L3 HAWDON 230KV CKT 1	209.8	0.03326	107.9806	LELAND OLDS - LELAND2-LNX3345.00 345KV CKT Z
20L	16NR	2	TO->FROM	G17_109	GLENHAM - L3 HAWDON 230KV CKT 1	209.8	0.03326	107.2656	G16-017-TAP 345.00 - LELAND2-LNX3345.00 345KV CKT 1
20L	16NR	2	TO->FROM	G17_109	GLENHAM - L3 HAWDON 230KV CKT 1	209.8	0.04765	104.0267	BISON - HETINGER 230KV CKT 1
20L	16NR	2	TO->FROM	G17_109	GLENHAM - L3 HAWDON 230KV CKT 1	209.8	0.04765	102.4061	BISON - MAURINE 230KV CKT 1
20L	16NR	2	TO->FROM	G17_109	GLENHAM - L3 HAWDON 230KV CKT 1	209.8	0.03154	100.1872	ANTELOP-LNX3345.00 - ANTELOPE VALLEY 345KV CKT Z
20L	16NR	2	TO->FROM	G17_109	GLENHAM - L3 HAWDON 230KV CKT 1	209.8	0.03154	100.0919	P12:345:UMZB:# 102 #: AVS BD IN ND. AVS BRD LR
20L	16NR	2	TO->FROM	G17_109	GLENHAM - L3 HAWDON 230KV CKT 1	209.8	0.03154	100.0919	P12:345:UMZB:# 103 #: BD IN SD. LOSS OF LINE
20L	16NR	2	FROM->TO	G17_109	MAURINE (MA KV1A) 230/115/13.8KV TRANSFORMER CKT 1	124.8	0.08175	112.1474	MAURINE - NUNDRWD-LNX3230.00 230KV CKT 1
20L	16NR	2	FROM->TO	G17_109	MAURINE (MA KV1A) 230/115/13.8KV TRANSFORMER CKT 1	124.8	0.08175	112.1474	NUNDRWD - NUNDRWD-LNX3230.00 230KV CKT Z
20L	16NR	2	FROM->TO	G17_109	MAURINE (MA KV1A) 230/115/13.8KV TRANSFORMER CKT 1	124.9	0.08175	112.1377	MAURINE - NUNDRWD-LNX3230.00 230KV CKT 1
20L	16NR	2	FROM->TO	G17_109	MAURINE (MA KV1A) 230/115/13.8KV TRANSFORMER CKT 1	124.9	0.08175	112.1377	NUNDRWD - NUNDRWD-LNX3230.00 230KV CKT Z
17G	16ALL	2	TO->FROM	G17_109	POPLAR - WOLF POINT 115KV CKT 1	120.7	0.55585	210.0415	DAWSON CREEK - G17109_T(P) 230.00 230KV CKT 1
17SP	16ALL	2	TO->FROM	G17_109	POPLAR - WOLF POINT 115KV CKT 1	120.7	0.55707	208.7059	DAWSON CREEK - G17109_T(P) 230.00 230KV CKT 1
17G	16NR	2	TO->FROM	G17_109	POPLAR - WOLF POINT 115KV CKT 1	120.6	0.54401	203.9662	DAWSON CREEK - G17109_T(P) 230.00 230KV CKT 1
17SP	00NR	2	TO->FROM	G17_109	POPLAR - WOLF POINT 115KV CKT 1	120.7	0.54802	195.664	DAWSON CREEK - G17109_T(P) 230.00 230KV CKT 1
16WP	16ALL	2	TO->FROM	G17_109	POPLAR - WOLF POINT 115KV CKT 1	131.9	0.55636	191.6027	DAWSON CREEK - G17109_T(P) 230.00 230KV CKT 1
16WP	00NR	2	TO->FROM	G17_109	POPLAR - WOLF POINT 115KV CKT 1	131.9	0.54807	184.5962	DAWSON CREEK - G17109_T(P) 230.00 230KV CKT 1
20SP	16ALL	2	TO->FROM	G17_109	POPLAR - WOLF POINT 115KV CKT 1	120.7	0.55737	182.1177	DAWSON CREEK - G17109_T(P) 230.00 230KV CKT 1
25SP	16ALL	2	TO->FROM	G17_109	POPLAR - WOLF POINT 115KV CKT 1	120.7	0.55747	177.2626	DAWSON CREEK - G17109_T(P) 230.00 230KV CKT 1
20SP	00NR	2	TO->FROM	G17_109	POPLAR - WOLF POINT 115KV CKT 1	120.7	0.54923	171.6268	DAWSON CREEK - G17109_T(P) 230.00 230KV CKT 1
25SP	00NR	2	TO->FROM	G17_109	POPLAR - WOLF POINT 115KV CKT 1	120.6	0.54925	170.199	DAWSON CREEK - G17109_T(P) 230.00 230KV CKT 1
20L	16ALL	2	TO->FROM	G17_109	POPLAR - WOLF POINT 115KV CKT 1	120.7	0.5538	168.0099	DAWSON CREEK - G17109_T(P) 230.00 230KV CKT 1
20WP	16ALL	2	TO->FROM	G17_109	POPLAR - WOLF POINT 115KV CKT 1	132	0.55681	165.0697	DAWSON CREEK - G17109_T(P) 230.00 230KV CKT 1
20L	16NR	2	TO->FROM	G17_109	POPLAR - WOLF POINT 115KV CKT 1	120.7	0.54802	163.2696	DAWSON CREEK - G17109_T(P) 230.00 230KV CKT 1
20WP	00NR	2	TO->FROM	G17_109	POPLAR - WOLF POINT 115KV CKT 1	132	0.55296	153.9751	DAWSON CREEK - G17109_T(P) 230.00 230KV CKT 1
17SP	00NR	2	TO->FROM	G17_109	SCOTTSBLUFF - VICTORY HILL 115KV CKT 1	119.1	0.0319	101.0982	P13:230-345:NPPD:STEGALL3:KV3A
17SP	00NR	2	TO->FROM	G17_109	SCOTTSBLUFF - VICTORY HILL 115KV CKT 1	119.1	0.0319	101.0982	STEGALL - STEGALL TRANSFORMER 230KV CKT 1
17SP	00NR	2	TO->FROM	G17_109	SCOTTSBLUFF - VICTORY HILL 115KV CKT 1	119.1	0.0319	101.0982	STEGALL (SGQ KV3A) 345/230/13.8KV TRANSFORMER CKT 1
17SP	00NR	2	TO->FROM	G17_109	SPLIT ROCK - WHITE 345KV CKT 1	712.6	0.03074	107.4708	LAKEFIELD 3 - LKFLDXL3 345KV CKT 1
20L	16NR	2	TO->FROM	G17_109	SPLIT ROCK - WHITE 345KV CKT 1	706.6	0.04368	105.5304	H081_SUB 345.00 - LYON COUNTY 345KV CKT 1
20L	16NR	2	TO->FROM	G17_109	SPLIT ROCK - WHITE 345KV CKT 1	706.6	0.04368	103.7047	H081_SUB 345.00 - J460 POI 345.00 345KV CKT 1
20L	16NR	2	TO->FROM	G17_109	SPLIT ROCK - WHITE 345KV CKT 1	706.6	0.04368	101.78	BROOKING COUNTY - J460 POI 345.00 345KV CKT 1
17G	16NR	3	FROM->TO	G17_109	BEULAH - STANTONTAP 7115.00 115KV CKT 1	121	0.04537	106.7921	CENTER - COYOTE 345KV CKT 1
16WP	00NR	3	FROM->TO	G17_109	BEULAH - STANTONTAP 7115.00 115KV CKT 1	132	0.04243	105.2103	CENTER - COYOTE 345KV CKT 1
20WP	00NR	3	FROM->TO	G17_109	BEULAH - STANTONTAP 7115.00 115KV CKT 1	132	0.03991	103.8418	CENTER - COYOTE 345KV CKT 1
17SP	16ALL	3	FROM->TO	G17_109	CIRCLE - DAWSON CREEK 115KV CKT 1	77.8	0.43483	274.6735	DAWSON CREEK - G17109_T(P) 230.00 230KV CKT 1
17SP	00NR	3	FROM->TO	G17_109	CIRCLE - DAWSON CREEK 115KV CKT 1	77.6	0.42422	272.8742	DAWSON CREEK - G17109_T(P) 230.00 230KV CKT 1
17G	16NR	3	FROM->TO	G17_109	CIRCLE - DAWSON CREEK 115KV CKT 1	77.8	0.42286	268.7856	DAWSON CREEK - G17109_T(P) 230.00 230KV CKT 1
17G	16ALL	3	FROM->TO	G17_109	CIRCLE - DAWSON CREEK 115KV CKT 1	78.7	0.434	266.6633	DAWSON CREEK - G17109_T(P) 230.00 230KV CKT 1
25SP	16ALL	3	FROM->TO	G17_109	CIRCLE - DAWSON CREEK 115KV CKT 1	78.1	0.43483	246.7401	DAWSON CREEK - G17109_T(P) 230.00 230KV CKT 1
25SP	00NR	3	FROM->TO	G17_109	CIRCLE - DAWSON CREEK 115KV CKT 1	78.1	0.42835	241.1934	DAWSON CREEK - G17109_T(P) 230.00 230KV CKT 1
20SP	00NR	3	FROM->TO	G17_109	CIRCLE - DAWSON CREEK 115KV CKT 1	78.3	0.42832	239.7987	DAWSON CREEK - G17109_T(P) 230.00 230KV CKT 1
20SP	16ALL	3	FROM->TO	G17_109	CIRCLE - DAWSON CREEK 115KV CKT 1	78.5	0.4347	238.7975	DAWSON CREEK - G17109_T(P) 230.00 230KV CKT 1
20L	16NR	3	FROM->TO	G17_109	CIRCLE - DAWSON CREEK 115KV CKT 1	78.7	0.42959	235.0302	DAWSON CREEK - G17109_T(P) 230.00 230KV CKT 1
20L	16ALL	3	FROM->TO	G17_109	CIRCLE - DAWSON CREEK 115KV CKT 1	78.8	0.43193	231.7868	DAWSON CREEK - G17109_T(P) 230.00 230KV CKT 1
16WP	16ALL	3	FROM->TO	G17_109	CIRCLE - DAWSON CREEK 115KV CKT 1	86.9	0.43427	231.1485	DAWSON CREEK - G17109_T(P) 230.00 230KV CKT 1
16WP	00NR	3	FROM->TO	G17_109	CIRCLE - DAWSON CREEK 115KV CKT 1	87.3	0.42426	213.7035	DAWSON CREEK - G17109_T(P) 230.00 230KV CKT 1

SEASON	GROUP	SCENARIO	DIRECTION	SOURCE	MONITORED ELEMENT	RATE (MVA)	TDF	CONTINGENCY LOADING %	CONTINGENCY
20WP	16ALL	3	FROM->TO	G17_109	CIRCLE - DAWSON CREEK 115KV CKT 1	87.4	0.4341	199.5606	DAWSON CREEK - G17109_T(P) 230.00 230KV CKT 1
20WP	00NR	3	FROM->TO	G17_109	CIRCLE - DAWSON CREEK 115KV CKT 1	87.3	0.42462	196.3097	DAWSON CREEK - G17109_T(P) 230.00 230KV CKT 1
17SP	16ALL	3	TO->FROM	G17_109	CIRCLE - G12_012IST 115.00 115KV CKT 1	77.1	0.43483	295.585	DAWSON CREEK - G17109_T(P) 230.00 230KV CKT 1
17G	16ALL	3	TO->FROM	G17_109	CIRCLE - G12_012IST 115.00 115KV CKT 1	76.7	0.434	294.4772	DAWSON CREEK - G17109_T(P) 230.00 230KV CKT 1
17SP	00NR	3	TO->FROM	G17_109	CIRCLE - G12_012IST 115.00 115KV CKT 1	77	0.42422	293.9616	DAWSON CREEK - G17109_T(P) 230.00 230KV CKT 1
25SP	16ALL	3	TO->FROM	G17_109	CIRCLE - G12_012IST 115.00 115KV CKT 1	77.2	0.43483	293.1399	DAWSON CREEK - G17109_T(P) 230.00 230KV CKT 1
17G	16NR	3	TO->FROM	G17_109	CIRCLE - G12_012IST 115.00 115KV CKT 1	77.4	0.42286	291.2341	DAWSON CREEK - G17109_T(P) 230.00 230KV CKT 1
25SP	00NR	3	TO->FROM	G17_109	CIRCLE - G12_012IST 115.00 115KV CKT 1	77.2	0.42835	287.5285	DAWSON CREEK - G17109_T(P) 230.00 230KV CKT 1
20SP	00NR	3	TO->FROM	G17_109	CIRCLE - G12_012IST 115.00 115KV CKT 1	77.4	0.42832	285.3519	DAWSON CREEK - G17109_T(P) 230.00 230KV CKT 1
20SP	16ALL	3	TO->FROM	G17_109	CIRCLE - G12_012IST 115.00 115KV CKT 1	77.6	0.4347	283.8351	DAWSON CREEK - G17109_T(P) 230.00 230KV CKT 1
20L	16NR	3	TO->FROM	G17_109	CIRCLE - G12_012IST 115.00 115KV CKT 1	77.2	0.42959	270.5555	DAWSON CREEK - G17109_T(P) 230.00 230KV CKT 1
20L	16ALL	3	TO->FROM	G17_109	CIRCLE - G12_012IST 115.00 115KV CKT 1	77.3	0.43193	266.815	DAWSON CREEK - G17109_T(P) 230.00 230KV CKT 1
16WP	16ALL	3	TO->FROM	G17_109	CIRCLE - G12_012IST 115.00 115KV CKT 1	86.5	0.43427	255.8011	DAWSON CREEK - G17109_T(P) 230.00 230KV CKT 1
20WP	16ALL	3	TO->FROM	G17_109	CIRCLE - G12_012IST 115.00 115KV CKT 1	86.9	0.4341	248.2347	DAWSON CREEK - G17109_T(P) 230.00 230KV CKT 1
20WP	00NR	3	TO->FROM	G17_109	CIRCLE - G12_012IST 115.00 115KV CKT 1	86.9	0.42462	244.9694	DAWSON CREEK - G17109_T(P) 230.00 230KV CKT 1
16WP	00NR	3	TO->FROM	G17_109	CIRCLE - G12_012IST 115.00 115KV CKT 1	86.7	0.42426	237.9045	DAWSON CREEK - G17109_T(P) 230.00 230KV CKT 1
17G	16NR	3	TO->FROM	G17_109	CIRCLE - G12_012IST 115.00 115KV CKT 1	77.4	0.03573	115.2889	CULBERTSN E7115.00 - WILISTON 115KV CKT 1
17SP	00NR	3	TO->FROM	G17_109	CIRCLE - G12_012IST 115.00 115KV CKT 1	77	0.03695	115.226	CULBERTSN E7115.00 - WILISTON 115KV CKT 1
20SP	00NR	3	TO->FROM	G17_109	CIRCLE - G12_012IST 115.00 115KV CKT 1	77.4	0.03722	113.0625	CULBERTSN E7115.00 - WILISTON 115KV CKT 1
25SP	00NR	3	TO->FROM	G17_109	CIRCLE - G12_012IST 115.00 115KV CKT 1	77.2	0.03723	112.3233	CULBERTSN E7115.00 - WILISTON 115KV CKT 1
20L	16NR	3	TO->FROM	G17_109	CIRCLE - G12_012IST 115.00 115KV CKT 1	77.2	0.03781	103.1078	CULBERTSN E7115.00 - WILISTON 115KV CKT 1
17SP	13ALL	3	TO->FROM	G17_109	CIRCLE - G12_012IST 115.00 115KV CKT 1	78.4	0.43497	101.0765	DAWSON CREEK - G17109_T(P) 230.00 230KV CKT 1
25SP	13ALL	3	TO->FROM	G17_109	CIRCLE - G12_012IST 115.00 115KV CKT 1	78.3	0.43493	100.1036	DAWSON CREEK - G17109_T(P) 230.00 230KV CKT 1
16WP	00NR	3	FROM->TO	G17_109	COALHILL4 230.00 - FT PECK 230KV CKT 1	174.7	1	182.8849	DAWSON CREEK - G17109_T(P) 230.00 230KV CKT 1
16WP	16ALL	3	FROM->TO	G17_109	COALHILL4 230.00 - FT PECK 230KV CKT 1	175.1	1	182.2958	DAWSON CREEK - G17109_T(P) 230.00 230KV CKT 1
17SP	00NR	3	FROM->TO	G17_109	COALHILL4 230.00 - FT PECK 230KV CKT 1	175.2	1	182.0776	DAWSON CREEK - G17109_T(P) 230.00 230KV CKT 1
17G	16NR	3	FROM->TO	G17_109	COALHILL4 230.00 - FT PECK 230KV CKT 1	175.5	1	181.8234	DAWSON CREEK - G17109_T(P) 230.00 230KV CKT 1
17SP	16ALL	3	FROM->TO	G17_109	COALHILL4 230.00 - FT PECK 230KV CKT 1	175.5	1	181.7664	DAWSON CREEK - G17109_T(P) 230.00 230KV CKT 1
17G	16ALL	3	FROM->TO	G17_109	COALHILL4 230.00 - FT PECK 230KV CKT 1	175.8	1	181.5131	DAWSON CREEK - G17109_T(P) 230.00 230KV CKT 1
20L	16NR	3	FROM->TO	G17_109	COALHILL4 230.00 - FT PECK 230KV CKT 1	175.8	1	174.1183	DAWSON CREEK - G17109_T(P) 230.00 230KV CKT 1
20L	16ALL	3	FROM->TO	G17_109	COALHILL4 230.00 - FT PECK 230KV CKT 1	175.9	1	174.0193	DAWSON CREEK - G17109_T(P) 230.00 230KV CKT 1
25SP	00NR	3	FROM->TO	G17_109	COALHILL4 230.00 - FT PECK 230KV CKT 1	175.7	1	170.7456	DAWSON CREEK - G17109_T(P) 230.00 230KV CKT 1
20WP	00NR	3	FROM->TO	G17_109	COALHILL4 230.00 - FT PECK 230KV CKT 1	175.6	1	170.7289	DAWSON CREEK - G17109_T(P) 230.00 230KV CKT 1
20SP	00NR	3	FROM->TO	G17_109	COALHILL4 230.00 - FT PECK 230KV CKT 1	175.8	1	170.6485	DAWSON CREEK - G17109_T(P) 230.00 230KV CKT 1
20WP	16ALL	3	FROM->TO	G17_109	COALHILL4 230.00 - FT PECK 230KV CKT 1	175.7	1	170.6318	DAWSON CREEK - G17109_T(P) 230.00 230KV CKT 1
25SP	16ALL	3	FROM->TO	G17_109	COALHILL4 230.00 - FT PECK 230KV CKT 1	175.8	1	170.5916	DAWSON CREEK - G17109_T(P) 230.00 230KV CKT 1
20SP	16ALL	3	FROM->TO	G17_109	COALHILL4 230.00 - FT PECK 230KV CKT 1	175.9	1	170.5515	DAWSON CREEK - G17109_T(P) 230.00 230KV CKT 1
16WP	00NR	3	TO->FROM	G17_109	COALHILL4 230.00 - G17109_T(P) 230.00 230KV CKT 1	174.7	1	182.8849	DAWSON CREEK - G17109_T(P) 230.00 230KV CKT 1
20WP	00NR	3	TO->FROM	G17_109	COALHILL4 230.00 - G17109_T(P) 230.00 230KV CKT 1	175	1	182.6857	DAWSON CREEK - G17109_T(P) 230.00 230KV CKT 1
20WP	16ALL	3	TO->FROM	G17_109	COALHILL4 230.00 - G17109_T(P) 230.00 230KV CKT 1	175.1	1	182.5243	DAWSON CREEK - G17109_T(P) 230.00 230KV CKT 1
25SP	00NR	3	TO->FROM	G17_109	COALHILL4 230.00 - G17109_T(P) 230.00 230KV CKT 1	175.2	1	182.363	DAWSON CREEK - G17109_T(P) 230.00 230KV CKT 1
16WP	16ALL	3	TO->FROM	G17_109	COALHILL4 230.00 - G17109_T(P) 230.00 230KV CKT 1	175.1	1	182.2958	DAWSON CREEK - G17109_T(P) 230.00 230KV CKT 1
20SP	00NR	3	TO->FROM	G17_109	COALHILL4 230.00 - G17109_T(P) 230.00 230KV CKT 1	175.4	1	182.1551	DAWSON CREEK - G17109_T(P) 230.00 230KV CKT 1
25SP	16ALL	3	TO->FROM	G17_109	COALHILL4 230.00 - G17109_T(P) 230.00 230KV CKT 1	175.4	1	182.0981	DAWSON CREEK - G17109_T(P) 230.00 230KV CKT 1
17SP	00NR	3	TO->FROM	G17_109	COALHILL4 230.00 - G17109_T(P) 230.00 230KV CKT 1	175.2	1	182.0776	DAWSON CREEK - G17109_T(P) 230.00 230KV CKT 1
20L	16ALL	3	TO->FROM	G17_109	COALHILL4 230.00 - G17109_T(P) 230.00 230KV CKT 1	175.6	1	182.0615	DAWSON CREEK - G17109_T(P) 230.00 230KV CKT 1
20L	16NR	3	TO->FROM	G17_109	COALHILL4 230.00 - G17109_T(P) 230.00 230KV CKT 1	175.6	1	182.0615	DAWSON CREEK - G17109_T(P) 230.00 230KV CKT 1
20SP	16ALL	3	TO->FROM	G17_109	COALHILL4 230.00 - G17109_T(P) 230.00 230KV CKT 1	175.5	1	182.0513	DAWSON CREEK - G17109_T(P) 230.00 230KV CKT 1
17G	16NR	3	TO->FROM	G17_109	COALHILL4 230.00 - G17109_T(P) 230.00 230KV CKT 1	175.5	1	181.8234	DAWSON CREEK - G17109_T(P) 230.00 230KV CKT 1
17SP	16ALL	3	TO->FROM	G17_109	COALHILL4 230.00 - G17109_T(P) 230.00 230KV CKT 1	175.5	1	181.7664	DAWSON CREEK - G17109_T(P) 230.00 230KV CKT 1
17G	16ALL	3	TO->FROM	G17_109	COALHILL4 230.00 - G17109_T(P) 230.00 230KV CKT 1	175.8	1	181.5131	DAWSON CREEK - G17109_T(P) 230.00 230KV CKT 1
17G	16ALL	3	TO->FROM	G17_109	CULBERTSN E7115.00 - CULBERTSON 115KV CKT 1	127.9	0.56012	179.3464	DAWSON CREEK - G17109_T(P) 230.00 230KV CKT 1
17SP	16ALL	3	TO->FROM	G17_109	CULBERTSN E7115.00 - CULBERTSON 115KV CKT 1	127.8	0.56135	174.1628	DAWSON CREEK - G17109_T(P) 230.00 230KV CKT 1

SEASON	GROUP	SCENARIO	DIRECTION	SOURCE	MONITORED ELEMENT	RATE (MVA)	TDF	CONTINGENCY LOADING %	CONTINGENCY
17G	16NR	3	TO->FROM	G17_109	CULBERTSN E7115.00 - CULBERTSON 115KV CKT 1	127.7	0.54818	174.0154	DAWSON CREEK - G17109_T(P) 230.00 230KV CKT 1
16WP	16ALL	3	TO->FROM	G17_109	CULBERTSN E7115.00 - CULBERTSON 115KV CKT 1	131.7	0.56064	167.4958	DAWSON CREEK - G17109_T(P) 230.00 230KV CKT 1
17SP	00NR	3	TO->FROM	G17_109	CULBERTSN E7115.00 - CULBERTSON 115KV CKT 1	127.8	0.55222	162.2147	DAWSON CREEK - G17109_T(P) 230.00 230KV CKT 1
16WP	00NR	3	TO->FROM	G17_109	CULBERTSN E7115.00 - CULBERTSON 115KV CKT 1	131.4	0.55227	160.3702	DAWSON CREEK - G17109_T(P) 230.00 230KV CKT 1
20SP	16ALL	3	TO->FROM	G17_109	CULBERTSN E7115.00 - CULBERTSON 115KV CKT 1	128	0.56165	149.3625	DAWSON CREEK - G17109_T(P) 230.00 230KV CKT 1
20L	16ALL	3	TO->FROM	G17_109	CULBERTSN E7115.00 - CULBERTSON 115KV CKT 1	128	0.55805	145.9719	DAWSON CREEK - G17109_T(P) 230.00 230KV CKT 1
25SP	16ALL	3	TO->FROM	G17_109	CULBERTSN E7115.00 - CULBERTSON 115KV CKT 1	128	0.56175	143.7687	DAWSON CREEK - G17109_T(P) 230.00 230KV CKT 1
20WP	16ALL	3	TO->FROM	G17_109	CULBERTSN E7115.00 - CULBERTSON 115KV CKT 1	131.9	0.56109	142.047	DAWSON CREEK - G17109_T(P) 230.00 230KV CKT 1
20L	16NR	3	TO->FROM	G17_109	CULBERTSN E7115.00 - CULBERTSON 115KV CKT 1	128	0.54802	139.505	DAWSON CREEK - G17109_T(P) 230.00 230KV CKT 1
20SP	00NR	3	TO->FROM	G17_109	CULBERTSN E7115.00 - CULBERTSON 115KV CKT 1	128	0.54923	137.4637	DAWSON CREEK - G17109_T(P) 230.00 230KV CKT 1
25SP	00NR	3	TO->FROM	G17_109	CULBERTSN E7115.00 - CULBERTSON 115KV CKT 1	128	0.54925	135.0469	DAWSON CREEK - G17109_T(P) 230.00 230KV CKT 1
20WP	00NR	3	TO->FROM	G17_109	CULBERTSN E7115.00 - CULBERTSON 115KV CKT 1	132	0.55296	128.7479	DAWSON CREEK - G17109_T(P) 230.00 230KV CKT 1
17G	16ALL	3	FROM->TO	G17_109	CULBERTSN E7115.00 - WILISTON 115KV CKT 1	149.8	0.55985	213.8024	DAWSON CREEK - G17109_T(P) 230.00 230KV CKT 1
20WP	00NR	3	FROM->TO	G17_109	CULBERTSN E7115.00 - WILISTON 115KV CKT 1	129	0.52791	211.187	DAWSON CREEK - G17109_T(P) 230.00 230KV CKT 1
20SP	00NR	3	FROM->TO	G17_109	CULBERTSN E7115.00 - WILISTON 115KV CKT 1	126.7	0.54776	210.7997	DAWSON CREEK - G17109_T(P) 230.00 230KV CKT 1
17SP	16ALL	3	FROM->TO	G17_109	CULBERTSN E7115.00 - WILISTON 115KV CKT 1	149.2	0.56117	210.7292	DAWSON CREEK - G17109_T(P) 230.00 230KV CKT 1
16WP	16ALL	3	FROM->TO	G17_109	CULBERTSN E7115.00 - WILISTON 115KV CKT 1	148.6	0.5604	209.8223	DAWSON CREEK - G17109_T(P) 230.00 230KV CKT 1
25SP	00NR	3	FROM->TO	G17_109	CULBERTSN E7115.00 - WILISTON 115KV CKT 1	126.7	0.54778	208.5159	DAWSON CREEK - G17109_T(P) 230.00 230KV CKT 1
17SP	00NR	3	FROM->TO	G17_109	CULBERTSN E7115.00 - WILISTON 115KV CKT 1	148.6	0.55068	201.0212	DAWSON CREEK - G17109_T(P) 230.00 230KV CKT 1
20WP	16ALL	3	FROM->TO	G17_109	CULBERTSN E7115.00 - WILISTON 115KV CKT 1	148.8	0.56082	200.9785	DAWSON CREEK - G17109_T(P) 230.00 230KV CKT 1
17G	16NR	3	FROM->TO	G17_109	CULBERTSN E7115.00 - WILISTON 115KV CKT 1	148.7	0.54628	199.334	DAWSON CREEK - G17109_T(P) 230.00 230KV CKT 1
20L	16NR	3	FROM->TO	G17_109	CULBERTSN E7115.00 - WILISTON 115KV CKT 1	126.6	0.54585	198.951	DAWSON CREEK - G17109_T(P) 230.00 230KV CKT 1
20SP	16ALL	3	FROM->TO	G17_109	CULBERTSN E7115.00 - WILISTON 115KV CKT 1	149.4	0.56148	189.9706	DAWSON CREEK - G17109_T(P) 230.00 230KV CKT 1
20L	16ALL	3	FROM->TO	G17_109	CULBERTSN E7115.00 - WILISTON 115KV CKT 1	149.1	0.55737	186.5674	DAWSON CREEK - G17109_T(P) 230.00 230KV CKT 1
25SP	16ALL	3	FROM->TO	G17_109	CULBERTSN E7115.00 - WILISTON 115KV CKT 1	149.4	0.56159	185.4485	DAWSON CREEK - G17109_T(P) 230.00 230KV CKT 1
16WP	00NR	3	FROM->TO	G17_109	CULBERTSN E7115.00 - WILISTON 115KV CKT 1	149.8	0.55073	161.9717	DAWSON CREEK - G17109_T(P) 230.00 230KV CKT 1
17G	16ALL	3	TO->FROM	G17_109	CULBERTSON - POPLAR 115KV CKT 1	88	0.56012	279.7545	DAWSON CREEK - G17109_T(P) 230.00 230KV CKT 1
16WP	16ALL	3	TO->FROM	G17_109	CULBERTSON - POPLAR 115KV CKT 1	87.9	0.56064	275.7588	DAWSON CREEK - G17109_T(P) 230.00 230KV CKT 1
17SP	16ALL	3	TO->FROM	G17_109	CULBERTSON - POPLAR 115KV CKT 1	88	0.56135	274.75	DAWSON CREEK - G17109_T(P) 230.00 230KV CKT 1
17G	16NR	3	TO->FROM	G17_109	CULBERTSON - POPLAR 115KV CKT 1	87.9	0.54818	271.9199	DAWSON CREEK - G17109_T(P) 230.00 230KV CKT 1
16WP	00NR	3	TO->FROM	G17_109	CULBERTSON - POPLAR 115KV CKT 1	87.8	0.55227	264.7225	DAWSON CREEK - G17109_T(P) 230.00 230KV CKT 1
17SP	00NR	3	TO->FROM	G17_109	CULBERTSON - POPLAR 115KV CKT 1	88	0.55222	257.3982	DAWSON CREEK - G17109_T(P) 230.00 230KV CKT 1
20SP	16ALL	3	TO->FROM	G17_109	CULBERTSON - POPLAR 115KV CKT 1	88	0.56165	238.2773	DAWSON CREEK - G17109_T(P) 230.00 230KV CKT 1
20WP	16ALL	3	TO->FROM	G17_109	CULBERTSON - POPLAR 115KV CKT 1	88	0.56109	236.3182	DAWSON CREEK - G17109_T(P) 230.00 230KV CKT 1
25SP	16ALL	3	TO->FROM	G17_109	CULBERTSON - POPLAR 115KV CKT 1	87.9	0.56175	231.1991	DAWSON CREEK - G17109_T(P) 230.00 230KV CKT 1
20L	16ALL	3	TO->FROM	G17_109	CULBERTSON - POPLAR 115KV CKT 1	88	0.55805	224.9364	DAWSON CREEK - G17109_T(P) 230.00 230KV CKT 1
20SP	00NR	3	TO->FROM	G17_109	CULBERTSON - POPLAR 115KV CKT 1	87.9	0.54923	221.2214	DAWSON CREEK - G17109_T(P) 230.00 230KV CKT 1
25SP	00NR	3	TO->FROM	G17_109	CULBERTSON - POPLAR 115KV CKT 1	87.9	0.54925	218.4983	DAWSON CREEK - G17109_T(P) 230.00 230KV CKT 1
20WP	00NR	3	TO->FROM	G17_109	CULBERTSON - POPLAR 115KV CKT 1	87.9	0.55296	216.891	DAWSON CREEK - G17109_T(P) 230.00 230KV CKT 1
20L	16NR	3	TO->FROM	G17_109	CULBERTSON - POPLAR 115KV CKT 1	88	0.54802	215.53	DAWSON CREEK - G17109_T(P) 230.00 230KV CKT 1
25SP	00NR	3	FROM->TO	G17_109	DAWSON CREEK - FALLON 115KV CKT 1	88	0.07867	123.9482	DAWSON CREEK - MILES CITY EAST 230KV CKT 1
20SP	00NR	3	FROM->TO	G17_109	DAWSON CREEK - FALLON 115KV CKT 1	87.9	0.07865	117.8248	DAWSON CREEK - MILES CITY EAST 230KV CKT 1
17SP	00NR	3	FROM->TO	G17_109	DAWSON CREEK - FALLON 115KV CKT 1	87.8	0.07876	107.6346	DAWSON CREEK - MILES CITY EAST 230KV CKT 1
20L	16NR	3	FROM->TO	G17_109	DAWSON CREEK - FALLON 115KV CKT 1	87.8	0.0789	103.0159	DAWSON CREEK - MILES CITY EAST 230KV CKT 1
20WP	00NR	3	FROM->TO	G17_109	DAWSON CREEK - FALLON 115KV CKT 1	88	0.07795	101.8682	DAWSON CREEK - MILES CITY EAST 230KV CKT 1
17G	16ALL	3	FROM->TO	G17_109	DAWSON CREEK - LEWIS & CLARK 115KV CKT 1	101	0.26604	132.6178	BEAVERHILL4 230.00 - MEDORA 230KV CKT 1
17G	16ALL	3	FROM->TO	G17_109	DAWSON CREEK - LEWIS & CLARK 115KV CKT 1	101	0.26604	128.9545	BELFIELD - MEDORA 230KV CKT 1
17G	16NR	3	FROM->TO	G17_109	DAWSON CREEK - LEWIS & CLARK 115KV CKT 1	101	0.26318	118.4333	BEAVERHILL4 230.00 - MEDORA 230KV CKT 1
17SP	16ALL	3	FROM->TO	G17_109	DAWSON CREEK - LEWIS & CLARK 115KV CKT 1	101	0.26651	115.6792	BEAVERHILL4 230.00 - MEDORA 230KV CKT 1
17G	16NR	3	FROM->TO	G17_109	DAWSON CREEK - LEWIS & CLARK 115KV CKT 1	101	0.26318	114.7699	BELFIELD - MEDORA 230KV CKT 1
17SP	16ALL	3	FROM->TO	G17_109	DAWSON CREEK - LEWIS & CLARK 115KV CKT 1	101	0.26651	112.0158	BELFIELD - MEDORA 230KV CKT 1
17G	16ALL	3	FROM->TO	G17_109	DAWSON CREEK - LEWIS & CLARK 115KV CKT 1	101	0.26604	109.6475	BEAVERHILL4 230.00 - DAWSON CREEK 230KV CKT 1
17G	16NR	3	FROM->TO	G17_109	DAWSON CREEK - LEWIS & CLARK 115KV CKT 1	101	0.16864	105.6087	CULBERTSN E7115.00 - WILISTON 115KV CKT 1

SEASON	GROUP	SCENARIO	DIRECTION	SOURCE	MONITORED ELEMENT	RATE (MVA)	TDF	CONTINGENCY LOADING %	CONTINGENCY
16WP	16ALL	3	FROM->TO	G17_109	DAWSON CREEK - LEWIS & CLARK 115KV CKT 1	124	0.26625	100.9936	BEAVERHILL4 230.00 - MEDORA 230KV CKT 1
17G	16NR	3	FROM->TO	G17_109	DAWSON CREEK - LEWIS & CLARK 115KV CKT 1	101	0.26318	100.7105	BEAVERHILL4 230.00 - DAWSON CREEK 230KV CKT 1
20L	16NR	3	TO->FROM	G17_109	ELK CREEK - NEWELL 115KV CKT 1	89.3	0.04822	101.7138	MAURINE - NUNDRWD-LNX3230.00 230KV CKT 1
20L	16NR	3	TO->FROM	G17_109	ELK CREEK - NEWELL 115KV CKT 1	89.3	0.04822	101.7138	NUNDRWD - NUNDRWD-LNX3230.00 230KV CKT Z
20L	16NR	3	FROM->TO	G17_109	ELK CREEK - RAPID CITY 115KV CKT 1	87.2	0.04822	99.9202	MAURINE - NUNDRWD-LNX3230.00 230KV CKT 1
20L	16NR	3	FROM->TO	G17_109	ELK CREEK - RAPID CITY 115KV CKT 1	87.2	0.04822	99.9202	NUNDRWD - NUNDRWD-LNX3230.00 230KV CKT Z
17SP	16ALL	3	FROM->TO	G17_109	FT PECK - WOLF POINT 115KV CKT 1	119.9	0.48898	173.1643	DAWSON CREEK - G17109_T(P) 230.00 230KV CKT 1
17G	16ALL	3	FROM->TO	G17_109	FT PECK - WOLF POINT 115KV CKT 1	120	0.48797	171.1	DAWSON CREEK - G17109_T(P) 230.00 230KV CKT 1
16WP	16ALL	3	FROM->TO	G17_109	FT PECK - WOLF POINT 115KV CKT 1	120	0.48835	169.4767	DAWSON CREEK - G17109_T(P) 230.00 230KV CKT 1
17G	16NR	3	FROM->TO	G17_109	FT PECK - WOLF POINT 115KV CKT 1	120	0.47664	167.854	DAWSON CREEK - G17109_T(P) 230.00 230KV CKT 1
17SP	00NR	3	FROM->TO	G17_109	FT PECK - WOLF POINT 115KV CKT 1	119.9	0.47929	165.949	DAWSON CREEK - G17109_T(P) 230.00 230KV CKT 1
16WP	00NR	3	FROM->TO	G17_109	FT PECK - WOLF POINT 115KV CKT 1	120	0.47933	159.4047	DAWSON CREEK - G17109_T(P) 230.00 230KV CKT 1
25SP	16ALL	3	FROM->TO	G17_109	FT PECK - WOLF POINT 115KV CKT 1	119.9	0.48917	156.9641	DAWSON CREEK - G17109_T(P) 230.00 230KV CKT 1
20SP	16ALL	3	FROM->TO	G17_109	FT PECK - WOLF POINT 115KV CKT 1	119.9	0.48906	156.7607	DAWSON CREEK - G17109_T(P) 230.00 230KV CKT 1
20WP	16ALL	3	FROM->TO	G17_109	FT PECK - WOLF POINT 115KV CKT 1	120	0.48849	152.8567	DAWSON CREEK - G17109_T(P) 230.00 230KV CKT 1
20SP	00NR	3	FROM->TO	G17_109	FT PECK - WOLF POINT 115KV CKT 1	119.9	0.47983	150.6636	DAWSON CREEK - G17109_T(P) 230.00 230KV CKT 1
25SP	00NR	3	FROM->TO	G17_109	FT PECK - WOLF POINT 115KV CKT 1	119.9	0.47985	150.5855	DAWSON CREEK - G17109_T(P) 230.00 230KV CKT 1
20WP	00NR	3	FROM->TO	G17_109	FT PECK - WOLF POINT 115KV CKT 1	119.9	0.47984	144.4944	DAWSON CREEK - G17109_T(P) 230.00 230KV CKT 1
20L	16ALL	3	FROM->TO	G17_109	FT PECK - WOLF POINT 115KV CKT 1	120	0.48594	141.34	DAWSON CREEK - G17109_T(P) 230.00 230KV CKT 1
20L	16NR	3	FROM->TO	G17_109	FT PECK - WOLF POINT 115KV CKT 1	120	0.47986	138.9627	DAWSON CREEK - G17109_T(P) 230.00 230KV CKT 1
17SP	16ALL	3	FROM->TO	G17_109	FT PECK - WOLF POINT 115KV CKT 2	128	0.50721	168.7125	DAWSON CREEK - G17109_T(P) 230.00 230KV CKT 1
17G	16ALL	3	FROM->TO	G17_109	FT PECK - WOLF POINT 115KV CKT 2	128	0.50616	166.5875	DAWSON CREEK - G17109_T(P) 230.00 230KV CKT 1
17G	16NR	3	FROM->TO	G17_109	FT PECK - WOLF POINT 115KV CKT 2	128	0.49441	163.3681	DAWSON CREEK - G17109_T(P) 230.00 230KV CKT 1
17SP	00NR	3	FROM->TO	G17_109	FT PECK - WOLF POINT 115KV CKT 2	128	0.49716	161.8681	DAWSON CREEK - G17109_T(P) 230.00 230KV CKT 1
16WP	16ALL	3	FROM->TO	G17_109	FT PECK - WOLF POINT 115KV CKT 2	132	0.50656	159.9939	DAWSON CREEK - G17109_T(P) 230.00 230KV CKT 1
25SP	16ALL	3	FROM->TO	G17_109	FT PECK - WOLF POINT 115KV CKT 2	127.9	0.50741	153.5043	DAWSON CREEK - G17109_T(P) 230.00 230KV CKT 1
20SP	16ALL	3	FROM->TO	G17_109	FT PECK - WOLF POINT 115KV CKT 2	127.9	0.50729	153.2322	DAWSON CREEK - G17109_T(P) 230.00 230KV CKT 1
16WP	00NR	3	FROM->TO	G17_109	FT PECK - WOLF POINT 115KV CKT 2	132	0.4972	150.3818	DAWSON CREEK - G17109_T(P) 230.00 230KV CKT 1
20SP	00NR	3	FROM->TO	G17_109	FT PECK - WOLF POINT 115KV CKT 2	127.9	0.49772	147.514	DAWSON CREEK - G17109_T(P) 230.00 230KV CKT 1
25SP	00NR	3	FROM->TO	G17_109	FT PECK - WOLF POINT 115KV CKT 2	127.9	0.49775	147.4433	DAWSON CREEK - G17109_T(P) 230.00 230KV CKT 1
20WP	16ALL	3	FROM->TO	G17_109	FT PECK - WOLF POINT 115KV CKT 2	132	0.5067	144.6576	DAWSON CREEK - G17109_T(P) 230.00 230KV CKT 1
20L	16ALL	3	FROM->TO	G17_109	FT PECK - WOLF POINT 115KV CKT 2	128	0.50405	138.1938	DAWSON CREEK - G17109_T(P) 230.00 230KV CKT 1
20WP	00NR	3	FROM->TO	G17_109	FT PECK - WOLF POINT 115KV CKT 2	131.9	0.49773	137.1293	DAWSON CREEK - G17109_T(P) 230.00 230KV CKT 1
20L	16NR	3	FROM->TO	G17_109	FT PECK - WOLF POINT 115KV CKT 2	128	0.49775	136	DAWSON CREEK - G17109_T(P) 230.00 230KV CKT 1
17SP	16ALL	3	FROM->TO	G17_109	FT PECK 230/115KV TRANSFORMER CKT 1	100	0.99739	390.556	DAWSON CREEK - G17109_T(P) 230.00 230KV CKT 1
17G	16ALL	3	FROM->TO	G17_109	FT PECK 230/115KV TRANSFORMER CKT 1	100	0.99598	387.092	DAWSON CREEK - G17109_T(P) 230.00 230KV CKT 1
16WP	16ALL	3	FROM->TO	G17_109	FT PECK 230/115KV TRANSFORMER CKT 1	100	0.99652	384.308	DAWSON CREEK - G17109_T(P) 230.00 230KV CKT 1
17G	16NR	3	FROM->TO	G17_109	FT PECK 230/115KV TRANSFORMER CKT 1	100	0.98034	381.7088	DAWSON CREEK - G17109_T(P) 230.00 230KV CKT 1
17SP	00NR	3	FROM->TO	G17_109	FT PECK 230/115KV TRANSFORMER CKT 1	100	0.984	378.68	DAWSON CREEK - G17109_T(P) 230.00 230KV CKT 1
25SP	16ALL	3	FROM->TO	G17_109	FT PECK 230/115KV TRANSFORMER CKT 1	100	0.99766	370.964	DAWSON CREEK - G17109_T(P) 230.00 230KV CKT 1
20SP	16ALL	3	FROM->TO	G17_109	FT PECK 230/115KV TRANSFORMER CKT 1	100	0.99751	370.604	DAWSON CREEK - G17109_T(P) 230.00 230KV CKT 1
16WP	00NR	3	FROM->TO	G17_109	FT PECK 230/115KV TRANSFORMER CKT 1	100	0.98407	367.6024	DAWSON CREEK - G17109_T(P) 230.00 230KV CKT 1
20WP	16ALL	3	FROM->TO	G17_109	FT PECK 230/115KV TRANSFORMER CKT 1	100	0.99671	364.184	DAWSON CREEK - G17109_T(P) 230.00 230KV CKT 1
20L	16ALL	3	FROM->TO	G17_109	FT PECK 230/115KV TRANSFORMER CKT 1	99.7	0.98999	361.0793	DAWSON CREEK - G17109_T(P) 230.00 230KV CKT 1
20SP	00NR	3	FROM->TO	G17_109	FT PECK 230/115KV TRANSFORMER CKT 1	100	0.98476	360.7232	DAWSON CREEK - G17109_T(P) 230.00 230KV CKT 1
25SP	00NR	3	FROM->TO	G17_109	FT PECK 230/115KV TRANSFORMER CKT 1	100	0.98479	360.5328	DAWSON CREEK - G17109_T(P) 230.00 230KV CKT 1
20L	16NR	3	FROM->TO	G17_109	FT PECK 230/115KV TRANSFORMER CKT 1	99.7	0.97761	355.4014	DAWSON CREEK - G17109_T(P) 230.00 230KV CKT 1
20WP	00NR	3	FROM->TO	G17_109	FT PECK 230/115KV TRANSFORMER CKT 1	100	0.98478	350.4296	DAWSON CREEK - G17109_T(P) 230.00 230KV CKT 1
17SP	13ALL	3	FROM->TO	G17_109	FT PECK 230/115KV TRANSFORMER CKT 1	100	0.99758	131.9766	DAWSON CREEK - G17109_T(P) 230.00 230KV CKT 1
16WP	13ALL	3	FROM->TO	G17_109	FT PECK 230/115KV TRANSFORMER CKT 1	100	0.99673	127.8822	DAWSON CREEK - G17109_T(P) 230.00 230KV CKT 1
17G	13ALL	3	FROM->TO	G17_109	FT PECK 230/115KV TRANSFORMER CKT 1	100	0.99647	126.6616	DAWSON CREEK - G17109_T(P) 230.00 230KV CKT 1
25SP	13ALL	3	FROM->TO	G17_109	FT PECK 230/115KV TRANSFORMER CKT 1	100	0.99779	113.1741	DAWSON CREEK - G17109_T(P) 230.00 230KV CKT 1
20SP	13ALL	3	FROM->TO	G17_109	FT PECK 230/115KV TRANSFORMER CKT 1	100	0.99765	112.9091	DAWSON CREEK - G17109_T(P) 230.00 230KV CKT 1

SEASON	GROUP	SCENARIO	DIRECTION	SOURCE	MONITORED ELEMENT	RATE (MVA)	TDF	CONTINGENCY LOADING %	CONTINGENCY
20WP	13ALL	3	FROM->TO	G17_109	FT PECK 230/115KV TRANSFORMER CKT 1	100	0.99686	108.3426	DAWSON CREEK - G17109_T(P) 230.00 230KV CKT 1
17SP	00NR	3	FROM->TO	G17_109	FT THOMPSON (FT2 KU1A) 345/230/13.8KV TRANSFORMER CKT 1	300.1	0.03263	142.8996	GR ISLD-LNX3345.00 - GRAND ISLAND 345KV CKT Z
17SP	00NR	3	FROM->TO	G17_109	FT THOMPSON (FT2 KU1A) 345/230/13.8KV TRANSFORMER CKT 1	300.1	0.03263	142.8996	GR ISLD-LNX3345.00 - HOLT.CO3 345.00 345KV CKT 1
17SP	00NR	3	FROM->TO	G17_109	FT THOMPSON (FT2 KU1A) 345/230/13.8KV TRANSFORMER CKT 1	301	0.03263	142.4723	GR ISLD-LNX3345.00 - GRAND ISLAND 345KV CKT Z
17SP	00NR	3	FROM->TO	G17_109	FT THOMPSON (FT2 KU1A) 345/230/13.8KV TRANSFORMER CKT 1	301	0.03263	142.4723	GR ISLD-LNX3345.00 - HOLT.CO3 345.00 345KV CKT 1
16WP	00NR	3	FROM->TO	G17_109	FT THOMPSON (FT2 KU1A) 345/230/13.8KV TRANSFORMER CKT 1	309.2	0.03248	125.3537	GR ISLD-LNX3345.00 - GRAND ISLAND 345KV CKT Z
16WP	00NR	3	FROM->TO	G17_109	FT THOMPSON (FT2 KU1A) 345/230/13.8KV TRANSFORMER CKT 1	309.2	0.03248	125.3537	GR ISLD-LNX3345.00 - HOLT.CO3 345.00 345KV CKT 1
16WP	00NR	3	FROM->TO	G17_109	FT THOMPSON (FT2 KU1A) 345/230/13.8KV TRANSFORMER CKT 1	309.5	0.03248	125.2322	GR ISLD-LNX3345.00 - GRAND ISLAND 345KV CKT Z
16WP	00NR	3	FROM->TO	G17_109	FT THOMPSON (FT2 KU1A) 345/230/13.8KV TRANSFORMER CKT 1	309.5	0.03248	125.2322	GR ISLD-LNX3345.00 - HOLT.CO3 345.00 345KV CKT 1
17SP	00NR	3	FROM->TO	G17_109	FT THOMPSON (FT2 KU1A) 345/230/13.8KV TRANSFORMER CKT 1	300.1	0.03263	106.3784	GRPRAR1-LNX3345.00 - YANKTON 345KV CKT Z
17SP	00NR	3	FROM->TO	G17_109	FT THOMPSON (FT2 KU1A) 345/230/13.8KV TRANSFORMER CKT 1	301	0.03263	106.0936	GRPRAR1-LNX3345.00 - YANKTON 345KV CKT Z
17SP	00NR	3	FROM->TO	G17_109	FT THOMPSON (FT2 KU1A) 345/230/13.8KV TRANSFORMER CKT 1	300.1	0.03263	105.5787	GRPRAR1-LNX3345.00 - HOLT.CO3 345.00 345KV CKT 1
17SP	00NR	3	FROM->TO	G17_109	FT THOMPSON (FT2 KU1A) 345/230/13.8KV TRANSFORMER CKT 1	301	0.03263	105.2962	GRPRAR1-LNX3345.00 - HOLT.CO3 345.00 345KV CKT 1
20SP	00NR	3	FROM->TO	G17_109	FT THOMPSON (FT2 KU1A) 345/230/13.8KV TRANSFORMER CKT 1	302.8	0.03236	103.2547	GRPRAR1-LNX3345.00 - YANKTON 345KV CKT Z
20SP	00NR	3	FROM->TO	G17_109	FT THOMPSON (FT2 KU1A) 345/230/13.8KV TRANSFORMER CKT 1	303.3	0.03236	103.1174	GRPRAR1-LNX3345.00 - YANKTON 345KV CKT Z
25SP	00NR	3	FROM->TO	G17_109	FT THOMPSON (FT2 KU1A) 345/230/13.8KV TRANSFORMER CKT 1	303.3	0.03238	102.3283	GRPRAR1-LNX3345.00 - YANKTON 345KV CKT Z
20SP	00NR	3	FROM->TO	G17_109	FT THOMPSON (FT2 KU1A) 345/230/13.8KV TRANSFORMER CKT 1	302.8	0.03236	102.1979	GRPRAR1-LNX3345.00 - HOLT.CO3 345.00 345KV CKT 1
25SP	00NR	3	FROM->TO	G17_109	FT THOMPSON (FT2 KU1A) 345/230/13.8KV TRANSFORMER CKT 1	303.7	0.03238	102.1935	GRPRAR1-LNX3345.00 - YANKTON 345KV CKT Z
20SP	00NR	3	FROM->TO	G17_109	FT THOMPSON (FT2 KU1A) 345/230/13.8KV TRANSFORMER CKT 1	303.3	0.03236	102.0294	GRPRAR1-LNX3345.00 - HOLT.CO3 345.00 345KV CKT 1
25SP	00NR	3	FROM->TO	G17_109	FT THOMPSON (FT2 KU1A) 345/230/13.8KV TRANSFORMER CKT 1	303.3	0.03238	101.2732	GRPRAR1-LNX3345.00 - HOLT.CO3 345.00 345KV CKT 1
25SP	00NR	3	FROM->TO	G17_109	FT THOMPSON (FT2 KU1A) 345/230/13.8KV TRANSFORMER CKT 1	303.7	0.03238	101.1727	GRPRAR1-LNX3345.00 - HOLT.CO3 345.00 345KV CKT 1
17SP	00NR	3	FROM->TO	G17_109	FT THOMPSON (FT2 KU1B) 345/230/13.8KV TRANSFORMER CKT 1	300	0.03268	143.1525	GR ISLD-LNX3345.00 - GRAND ISLAND 345KV CKT Z
17SP	00NR	3	FROM->TO	G17_109	FT THOMPSON (FT2 KU1B) 345/230/13.8KV TRANSFORMER CKT 1	300	0.03268	143.1525	GR ISLD-LNX3345.00 - HOLT.CO3 345.00 345KV CKT 1
17SP	00NR	3	FROM->TO	G17_109	FT THOMPSON (FT2 KU1B) 345/230/13.8KV TRANSFORMER CKT 1	300.9	0.03268	142.7244	GR ISLD-LNX3345.00 - GRAND ISLAND 345KV CKT Z
17SP	00NR	3	FROM->TO	G17_109	FT THOMPSON (FT2 KU1B) 345/230/13.8KV TRANSFORMER CKT 1	300.9	0.03268	142.7244	GR ISLD-LNX3345.00 - HOLT.CO3 345.00 345KV CKT 1
16WP	00NR	3	FROM->TO	G17_109	FT THOMPSON (FT2 KU1B) 345/230/13.8KV TRANSFORMER CKT 1	309.2	0.03253	125.5206	GR ISLD-LNX3345.00 - GRAND ISLAND 345KV CKT Z
16WP	00NR	3	FROM->TO	G17_109	FT THOMPSON (FT2 KU1B) 345/230/13.8KV TRANSFORMER CKT 1	309.2	0.03253	125.5206	GR ISLD-LNX3345.00 - HOLT.CO3 345.00 345KV CKT 1
16WP	00NR	3	FROM->TO	G17_109	FT THOMPSON (FT2 KU1B) 345/230/13.8KV TRANSFORMER CKT 1	309.4	0.03253	125.4717	GR ISLD-LNX3345.00 - GRAND ISLAND 345KV CKT Z
16WP	00NR	3	FROM->TO	G17_109	FT THOMPSON (FT2 KU1B) 345/230/13.8KV TRANSFORMER CKT 1	309.4	0.03253	125.4717	GR ISLD-LNX3345.00 - HOLT.CO3 345.00 345KV CKT 1
17SP	00NR	3	FROM->TO	G17_109	FT THOMPSON (FT2 KU1B) 345/230/13.8KV TRANSFORMER CKT 1	300	0.03268	106.5525	GRPRAR1-LNX3345.00 - YANKTON 345KV CKT Z
17SP	00NR	3	FROM->TO	G17_109	FT THOMPSON (FT2 KU1B) 345/230/13.8KV TRANSFORMER CKT 1	300.9	0.03268	106.2671	GRPRAR1-LNX3345.00 - YANKTON 345KV CKT Z
17SP	00NR	3	FROM->TO	G17_109	FT THOMPSON (FT2 KU1B) 345/230/13.8KV TRANSFORMER CKT 1	300	0.03268	105.7859	GRPRAR1-LNX3345.00 - HOLT.CO3 345.00 345KV CKT 1
17SP	00NR	3	FROM->TO	G17_109	FT THOMPSON (FT2 KU1B) 345/230/13.8KV TRANSFORMER CKT 1	300.9	0.03268	105.4695	GRPRAR1-LNX3345.00 - HOLT.CO3 345.00 345KV CKT 1
20SP	00NR	3	FROM->TO	G17_109	FT THOMPSON (FT2 KU1B) 345/230/13.8KV TRANSFORMER CKT 1	302.8	0.03241	103.3921	GRPRAR1-LNX3345.00 - YANKTON 345KV CKT Z
20SP	00NR	3	FROM->TO	G17_109	FT THOMPSON (FT2 KU1B) 345/230/13.8KV TRANSFORMER CKT 1	303.2	0.03241	103.2886	GRPRAR1-LNX3345.00 - YANKTON 345KV CKT Z
25SP	00NR	3	FROM->TO	G17_109	FT THOMPSON (FT2 KU1B) 345/230/13.8KV TRANSFORMER CKT 1	303.2	0.03243	102.4992	GRPRAR1-LNX3345.00 - YANKTON 345KV CKT Z
25SP	00NR	3	FROM->TO	G17_109	FT THOMPSON (FT2 KU1B) 345/230/13.8KV TRANSFORMER CKT 1	303.6	0.03243	102.3642	GRPRAR1-LNX3345.00 - YANKTON 345KV CKT Z
20SP	00NR	3	FROM->TO	G17_109	FT THOMPSON (FT2 KU1B) 345/230/13.8KV TRANSFORMER CKT 1	302.8	0.03241	102.3353	GRPRAR1-LNX3345.00 - HOLT.CO3 345.00 345KV CKT 1
20SP	00NR	3	FROM->TO	G17_109	FT THOMPSON (FT2 KU1B) 345/230/13.8KV TRANSFORMER CKT 1	303.2	0.03241	102.2332	GRPRAR1-LNX3345.00 - HOLT.CO3 345.00 345KV CKT 1
25SP	00NR	3	FROM->TO	G17_109	FT THOMPSON (FT2 KU1B) 345/230/13.8KV TRANSFORMER CKT 1	303.2	0.03243	101.4438	GRPRAR1-LNX3345.00 - HOLT.CO3 345.00 345KV CKT 1
25SP	00NR	3	FROM->TO	G17_109	FT THOMPSON (FT2 KU1B) 345/230/13.8KV TRANSFORMER CKT 1	303.6	0.03243	101.3431	GRPRAR1-LNX3345.00 - HOLT.CO3 345.00 345KV CKT 1
17SP	16ALL	3	TO->FROM	G17_109	G12_012IST 115.00 - WOLF POINT 115KV CKT 1	78.5	0.43483	196.0459	DAWSON CREEK - G17109_T(P) 230.00 230KV CKT 1
17SP	00NR	3	TO->FROM	G17_109	G12_012IST 115.00 - WOLF POINT 115KV CKT 1	78.6	0.42422	193.7028	DAWSON CREEK - G17109_T(P) 230.00 230KV CKT 1
25SP	16ALL	3	TO->FROM	G17_109	G12_012IST 115.00 - WOLF POINT 115KV CKT 1	78.7	0.43483	193.0165	DAWSON CREEK - G17109_T(P) 230.00 230KV CKT 1
17G	16NR	3	TO->FROM	G17_109	G12_012IST 115.00 - WOLF POINT 115KV CKT 1	78.4	0.42286	193.0041	DAWSON CREEK - G17109_T(P) 230.00 230KV CKT 1
17G	16ALL	3	TO->FROM	G17_109	G12_012IST 115.00 - WOLF POINT 115KV CKT 1	78.8	0.434	192.467	DAWSON CREEK - G17109_T(P) 230.00 230KV CKT 1
25SP	00NR	3	TO->FROM	G17_109	G12_012IST 115.00 - WOLF POINT 115KV CKT 1	78.7	0.42835	187.5121	DAWSON CREEK - G17109_T(P) 230.00 230KV CKT 1
20SP	00NR	3	TO->FROM	G17_109	G12_012IST 115.00 - WOLF POINT 115KV CKT 1	78.7	0.42832	186.2292	DAWSON CREEK - G17109_T(P) 230.00 230KV CKT 1
20SP	16ALL	3	TO->FROM	G17_109	G12_012IST 115.00 - WOLF POINT 115KV CKT 1	78.6	0.4347	185.6946	DAWSON CREEK - G17109_T(P) 230.00 230KV CKT 1
20L	16NR	3	TO->FROM	G17_109	G12_012IST 115.00 - WOLF POINT 115KV CKT 1	78.5	0.42959	171.5526	DAWSON CREEK - G17109_T(P) 230.00 230KV CKT 1
20L	16ALL	3	TO->FROM	G17_109	G12_012IST 115.00 - WOLF POINT 115KV CKT 1	78.5	0.43193	168.4688	DAWSON CREEK - G17109_T(P) 230.00 230KV CKT 1
16WP	16ALL	3	TO->FROM	G17_109	G12_012IST 115.00 - WOLF POINT 115KV CKT 1	87.5	0.43427	168.3063	DAWSON CREEK - G17109_T(P) 230.00 230KV CKT 1
20WP	16ALL	3	TO->FROM	G17_109	G12_012IST 115.00 - WOLF POINT 115KV CKT 1	87.5	0.4341	161.6183	DAWSON CREEK - G17109_T(P) 230.00 230KV CKT 1

SEASON	GROUP	SCENARIO	DIRECTION	SOURCE	MONITORED ELEMENT	RATE (MVA)	TDF	CONTINGENCY LOADING %	CONTINGENCY
20WP	00NR	3	TO->FROM	G17_109	G12_012IST 115.00 - WOLF POINT 115KV CKT 1	87.6	0.42462	158.0804	DAWSON CREEK - G17109_T(P) 230.00 230KV CKT 1
16WP	00NR	3	TO->FROM	G17_109	G12_012IST 115.00 - WOLF POINT 115KV CKT 1	87.3	0.42426	151.7333	DAWSON CREEK - G17109_T(P) 230.00 230KV CKT 1
20L	16NR	3	FROM->TO	G17_109	G14_001IST 115.00 - NEWELL 115KV CKT 1	88.4	0.04822	109.7629	MAURINE - NUNDRWD-LNX3230.00 230KV CKT 1
20L	16NR	3	FROM->TO	G17_109	G14_001IST 115.00 - NEWELL 115KV CKT 1	88.4	0.04822	109.7629	NUNDRWD - NUNDRWD-LNX3230.00 230KV CKT Z
17G	16NR	3	TO->FROM	G17_109	GARRISON - STANTONTAP 7115.00 115KV CKT 1	121	0.04537	106.7094	CENTER - COYOTE 345KV CKT 1
16WP	00NR	3	TO->FROM	G17_109	GARRISON - STANTONTAP 7115.00 115KV CKT 1	132	0.04243	105.1345	CENTER - COYOTE 345KV CKT 1
20WP	00NR	3	TO->FROM	G17_109	GARRISON - STANTONTAP 7115.00 115KV CKT 1	132	0.03991	103.8418	CENTER - COYOTE 345KV CKT 1
20L	16NR	3	TO->FROM	G17_109	GLENHAM - L3 HAWDON 230KV CKT 1	209.8	0.03325	110.2669	FT THOMPSON - FTTHOM1-LNX3345.00 345KV CKT Z
20L	16NR	3	TO->FROM	G17_109	GLENHAM - L3 HAWDON 230KV CKT 1	209.8	0.03325	110.2669	FTTHOM1-LNX3345.00 - G16-017-TAP 345.00 345KV CKT 1
20L	16NR	3	TO->FROM	G17_109	GLENHAM - L3 HAWDON 230KV CKT 1	209.8	0.03325	108.9323	P12:345:UMZB:# 108 #: LOS FT IN ND. LOS FT
20L	16NR	3	TO->FROM	G17_109	GLENHAM - L3 HAWDON 230KV CKT 1	209.8	0.03325	107.979	LELAND OLDS - LELAND2-LNX3345.00 345KV CKT Z
20L	16NR	3	TO->FROM	G17_109	GLENHAM - L3 HAWDON 230KV CKT 1	209.8	0.03325	107.2641	G16-017-TAP 345.00 - LELAND2-LNX3345.00 345KV CKT 1
20L	16NR	3	TO->FROM	G17_109	GLENHAM - L3 HAWDON 230KV CKT 1	209.8	0.04766	104.0282	BISON - HETINGER 230KV CKT 1
20L	16NR	3	TO->FROM	G17_109	GLENHAM - L3 HAWDON 230KV CKT 1	209.8	0.04766	102.4076	BISON - MAURINE 230KV CKT 1
20L	16NR	3	TO->FROM	G17_109	GLENHAM - L3 HAWDON 230KV CKT 1	209.8	0.03152	100.1842	ANTELOP-LNX3345.00 - ANTELOPE VALLEY 345KV CKT Z
20L	16NR	3	TO->FROM	G17_109	GLENHAM - L3 HAWDON 230KV CKT 1	209.8	0.03152	100.0888	P12:345:UMZB:# 102 #: AVS BD IN ND. AVS BRD LR
20L	16NR	3	TO->FROM	G17_109	GLENHAM - L3 HAWDON 230KV CKT 1	209.8	0.03152	100.0888	P12:345:UMZB:# 103 #: BD IN SD. LOSS OF LINE
20L	16NR	3	FROM->TO	G17_109	MAURINE (MA KV1A) 230/115/13.8KV TRANSFORMER CKT 1	124.8	0.08183	112.1679	MAURINE - NUNDRWD-LNX3230.00 230KV CKT 1
20L	16NR	3	FROM->TO	G17_109	MAURINE (MA KV1A) 230/115/13.8KV TRANSFORMER CKT 1	124.8	0.08183	112.1679	NUNDRWD - NUNDRWD-LNX3230.00 230KV CKT Z
20L	16NR	3	FROM->TO	G17_109	MAURINE (MA KV1A) 230/115/13.8KV TRANSFORMER CKT 1	124.9	0.08183	112.1582	MAURINE - NUNDRWD-LNX3230.00 230KV CKT 1
20L	16NR	3	FROM->TO	G17_109	MAURINE (MA KV1A) 230/115/13.8KV TRANSFORMER CKT 1	124.9	0.08183	112.1582	NUNDRWD - NUNDRWD-LNX3230.00 230KV CKT Z
17G	16ALL	3	TO->FROM	G17_109	POPLAR - WOLF POINT 115KV CKT 1	120.7	0.56012	212.2485	DAWSON CREEK - G17109_T(P) 230.00 230KV CKT 1
17SP	16ALL	3	TO->FROM	G17_109	POPLAR - WOLF POINT 115KV CKT 1	120.7	0.56135	211.0025	DAWSON CREEK - G17109_T(P) 230.00 230KV CKT 1
17G	16NR	3	TO->FROM	G17_109	POPLAR - WOLF POINT 115KV CKT 1	120.6	0.54818	206.1506	DAWSON CREEK - G17109_T(P) 230.00 230KV CKT 1
17SP	00NR	3	TO->FROM	G17_109	POPLAR - WOLF POINT 115KV CKT 1	120.7	0.55222	197.9374	DAWSON CREEK - G17109_T(P) 230.00 230KV CKT 1
16WP	16ALL	3	TO->FROM	G17_109	POPLAR - WOLF POINT 115KV CKT 1	132	0.56064	193.4788	DAWSON CREEK - G17109_T(P) 230.00 230KV CKT 1
16WP	00NR	3	TO->FROM	G17_109	POPLAR - WOLF POINT 115KV CKT 1	131.9	0.55227	186.1459	DAWSON CREEK - G17109_T(P) 230.00 230KV CKT 1
20SP	16ALL	3	TO->FROM	G17_109	POPLAR - WOLF POINT 115KV CKT 1	120.7	0.56165	184.1624	DAWSON CREEK - G17109_T(P) 230.00 230KV CKT 1
25SP	16ALL	3	TO->FROM	G17_109	POPLAR - WOLF POINT 115KV CKT 1	120.6	0.56175	179.4561	DAWSON CREEK - G17109_T(P) 230.00 230KV CKT 1
20SP	00NR	3	TO->FROM	G17_109	POPLAR - WOLF POINT 115KV CKT 1	120.6	0.54923	171.7691	DAWSON CREEK - G17109_T(P) 230.00 230KV CKT 1
25SP	00NR	3	TO->FROM	G17_109	POPLAR - WOLF POINT 115KV CKT 1	120.6	0.54925	170.199	DAWSON CREEK - G17109_T(P) 230.00 230KV CKT 1
20L	16ALL	3	TO->FROM	G17_109	POPLAR - WOLF POINT 115KV CKT 1	120.7	0.55805	170.0447	DAWSON CREEK - G17109_T(P) 230.00 230KV CKT 1
20WP	16ALL	3	TO->FROM	G17_109	POPLAR - WOLF POINT 115KV CKT 1	132	0.56109	167.0909	DAWSON CREEK - G17109_T(P) 230.00 230KV CKT 1
20L	16NR	3	TO->FROM	G17_109	POPLAR - WOLF POINT 115KV CKT 1	120.7	0.54802	163.2696	DAWSON CREEK - G17109_T(P) 230.00 230KV CKT 1
20WP	00NR	3	TO->FROM	G17_109	POPLAR - WOLF POINT 115KV CKT 1	132	0.55296	153.9751	DAWSON CREEK - G17109_T(P) 230.00 230KV CKT 1
17SP	00NR	3	TO->FROM	G17_109	SCOTTSBLUFF - VICTORY HILL 115KV CKT 1	119.1	0.0319	101.0982	P13:230-345:NPPD:STEGALL3:KV3A
17SP	00NR	3	TO->FROM	G17_109	SCOTTSBLUFF - VICTORY HILL 115KV CKT 1	119.1	0.0319	101.0982	STEGALL - STEGALL TRANSFORMER 230KV CKT 1
17SP	00NR	3	TO->FROM	G17_109	SCOTTSBLUFF - VICTORY HILL 115KV CKT 1	119.1	0.0319	101.0143	STEGALL (SGQ KV3A) 345/230/13.8KV TRANSFORMER CKT 1
17SP	00NR	3	TO->FROM	G17_109	SPLIT ROCK - WHITE 345KV CKT 1	712.5	0.03073	107.4995	LAKEFIELD 3 - LKFLDXL3 345KV CKT 1
20L	16NR	3	TO->FROM	G17_109	SPLIT ROCK - WHITE 345KV CKT 1	706.6	0.04366	105.5295	H081_SUB 345.00 - LYON COUNTY 345KV CKT 1
20L	16NR	3	TO->FROM	G17_109	SPLIT ROCK - WHITE 345KV CKT 1	706.6	0.04366	103.7038	H081_SUB 345.00 - J460 POI 345.00 345KV CKT 1
20L	16NR	3	TO->FROM	G17_109	SPLIT ROCK - WHITE 345KV CKT 1	706.6	0.04366	101.7791	BROOKING COUNTY - J460 POI 345.00 345KV CKT 1
17G	16NR	4	FROM->TO	G17_109	BEULAH - STANTONTAP 7115.00 115KV CKT 1	121	0.04556	106.9249	CENTER - COYOTE 345KV CKT 1
16WP	00NR	4	FROM->TO	G17_109	BEULAH - STANTONTAP 7115.00 115KV CKT 1	132	0.04262	105.2564	CENTER - COYOTE 345KV CKT 1
20WP	00NR	4	FROM->TO	G17_109	BEULAH - STANTONTAP 7115.00 115KV CKT 1	132	0.04006	103.8024	CENTER - COYOTE 345KV CKT 1
25SP	00NR	4	FROM->TO	G17_109	DAWSON CREEK - FALLON 115KV CKT 1	88	0.0782	124.0045	DAWSON CREEK - MILES CITY EAST 230KV CKT 1
20SP	00NR	4	FROM->TO	G17_109	DAWSON CREEK - FALLON 115KV CKT 1	87.9	0.07818	117.6537	DAWSON CREEK - MILES CITY EAST 230KV CKT 1
17SP	00NR	4	FROM->TO	G17_109	DAWSON CREEK - FALLON 115KV CKT 1	87.8	0.07841	107.5071	DAWSON CREEK - MILES CITY EAST 230KV CKT 1
20L	16NR	4	FROM->TO	G17_109	DAWSON CREEK - FALLON 115KV CKT 1	87.8	0.07844	102.7344	DAWSON CREEK - MILES CITY EAST 230KV CKT 1
20WP	00NR	4	FROM->TO	G17_109	DAWSON CREEK - FALLON 115KV CKT 1	88	0.07749	101.7009	DAWSON CREEK - MILES CITY EAST 230KV CKT 1
20L	16NR	4	TO->FROM	G17_109	ELK CREEK - NEWELL 115KV CKT 1	89.3	0.04824	101.7209	MAURINE - NUNDRWD-LNX3230.00 230KV CKT 1
20L	16NR	4	TO->FROM	G17_109	ELK CREEK - NEWELL 115KV CKT 1	89.3	0.04824	101.7209	NUNDRWD - NUNDRWD-LNX3230.00 230KV CKT Z
20L	16NR	4	FROM->TO	G17_109	ELK CREEK - RAPID CITY 115KV CKT 1	87.2	0.04824	99.9275	MAURINE - NUNDRWD-LNX3230.00 230KV CKT 1

SEASON	GROUP	SCENARIO	DIRECTION	SOURCE	MONITORED ELEMENT	RATE (MVA)	TDF	CONTINGENCY LOADING %	CONTINGENCY
20L	16NR	4	FROM->TO	G17_109	ELK CREEK - RAPID CITY 115KV CKT 1	87.2	0.04824	99.9275	NUNDRWD - NUNDRWD-LNX3230.00 230KV CKT Z
17SP	00NR	4	FROM->TO	G17_109	FT THOMPSON (FT2 KU1A) 345/230/13.8KV TRANSFORMER CKT 1	300.1	0.0326	142.8964	GR ISLD-LNX3345.00 - GRAND ISLAND 345KV CKT Z
17SP	00NR	4	FROM->TO	G17_109	FT THOMPSON (FT2 KU1A) 345/230/13.8KV TRANSFORMER CKT 1	300.1	0.0326	142.8964	GR ISLD-LNX3345.00 - HOLT.CO3 345.00 345KV CKT 1
17SP	00NR	4	FROM->TO	G17_109	FT THOMPSON (FT2 KU1A) 345/230/13.8KV TRANSFORMER CKT 1	301	0.0326	142.4691	GR ISLD-LNX3345.00 - GRAND ISLAND 345KV CKT Z
17SP	00NR	4	FROM->TO	G17_109	FT THOMPSON (FT2 KU1A) 345/230/13.8KV TRANSFORMER CKT 1	301	0.0326	142.4691	GR ISLD-LNX3345.00 - HOLT.CO3 345.00 345KV CKT 1
16WP	00NR	4	FROM->TO	G17_109	FT THOMPSON (FT2 KU1A) 345/230/13.8KV TRANSFORMER CKT 1	309.2	0.03245	125.3506	GR ISLD-LNX3345.00 - GRAND ISLAND 345KV CKT Z
16WP	00NR	4	FROM->TO	G17_109	FT THOMPSON (FT2 KU1A) 345/230/13.8KV TRANSFORMER CKT 1	309.2	0.03245	125.3506	GR ISLD-LNX3345.00 - HOLT.CO3 345.00 345KV CKT 1
16WP	00NR	4	FROM->TO	G17_109	FT THOMPSON (FT2 KU1A) 345/230/13.8KV TRANSFORMER CKT 1	309.5	0.03245	125.2291	GR ISLD-LNX3345.00 - GRAND ISLAND 345KV CKT Z
16WP	00NR	4	FROM->TO	G17_109	FT THOMPSON (FT2 KU1A) 345/230/13.8KV TRANSFORMER CKT 1	309.5	0.03245	125.2291	GR ISLD-LNX3345.00 - HOLT.CO3 345.00 345KV CKT 1
17SP	00NR	4	FROM->TO	G17_109	FT THOMPSON (FT2 KU1A) 345/230/13.8KV TRANSFORMER CKT 1	300.1	0.0326	106.3752	GRPRAR1-LNX3345.00 - YANKTON 345KV CKT Z
17SP	00NR	4	FROM->TO	G17_109	FT THOMPSON (FT2 KU1A) 345/230/13.8KV TRANSFORMER CKT 1	301	0.0326	106.0904	GRPRAR1-LNX3345.00 - YANKTON 345KV CKT Z
17SP	00NR	4	FROM->TO	G17_109	FT THOMPSON (FT2 KU1A) 345/230/13.8KV TRANSFORMER CKT 1	300.1	0.0326	105.5755	GRPRAR1-LNX3345.00 - HOLT.CO3 345.00 345KV CKT 1
17SP	00NR	4	FROM->TO	G17_109	FT THOMPSON (FT2 KU1A) 345/230/13.8KV TRANSFORMER CKT 1	301	0.0326	105.293	GRPRAR1-LNX3345.00 - HOLT.CO3 345.00 345KV CKT 1
20SP	00NR	4	FROM->TO	G17_109	FT THOMPSON (FT2 KU1A) 345/230/13.8KV TRANSFORMER CKT 1	302.8	0.03235	103.2867	GRPRAR1-LNX3345.00 - YANKTON 345KV CKT Z
20SP	00NR	4	FROM->TO	G17_109	FT THOMPSON (FT2 KU1A) 345/230/13.8KV TRANSFORMER CKT 1	303.2	0.03235	103.1834	GRPRAR1-LNX3345.00 - YANKTON 345KV CKT Z
25SP	00NR	4	FROM->TO	G17_109	FT THOMPSON (FT2 KU1A) 345/230/13.8KV TRANSFORMER CKT 1	303.2	0.03237	102.3939	GRPRAR1-LNX3345.00 - YANKTON 345KV CKT Z
25SP	00NR	4	FROM->TO	G17_109	FT THOMPSON (FT2 KU1A) 345/230/13.8KV TRANSFORMER CKT 1	303.6	0.03237	102.259	GRPRAR1-LNX3345.00 - YANKTON 345KV CKT Z
20SP	00NR	4	FROM->TO	G17_109	FT THOMPSON (FT2 KU1A) 345/230/13.8KV TRANSFORMER CKT 1	302.8	0.03235	102.2299	GRPRAR1-LNX3345.00 - HOLT.CO3 345.00 345KV CKT 1
20SP	00NR	4	FROM->TO	G17_109	FT THOMPSON (FT2 KU1A) 345/230/13.8KV TRANSFORMER CKT 1	303.2	0.03235	102.095	GRPRAR1-LNX3345.00 - HOLT.CO3 345.00 345KV CKT 1
25SP	00NR	4	FROM->TO	G17_109	FT THOMPSON (FT2 KU1A) 345/230/13.8KV TRANSFORMER CKT 1	303.2	0.03237	101.3385	GRPRAR1-LNX3345.00 - HOLT.CO3 345.00 345KV CKT 1
25SP	00NR	4	FROM->TO	G17_109	FT THOMPSON (FT2 KU1A) 345/230/13.8KV TRANSFORMER CKT 1	303.6	0.03237	101.205	GRPRAR1-LNX3345.00 - HOLT.CO3 345.00 345KV CKT 1
17SP	00NR	4	FROM->TO	G17_109	FT THOMPSON (FT2 KU1B) 345/230/13.8KV TRANSFORMER CKT 1	300	0.03265	143.1493	GR ISLD-LNX3345.00 - GRAND ISLAND 345KV CKT Z
17SP	00NR	4	FROM->TO	G17_109	FT THOMPSON (FT2 KU1B) 345/230/13.8KV TRANSFORMER CKT 1	300	0.03265	143.1493	GR ISLD-LNX3345.00 - HOLT.CO3 345.00 345KV CKT 1
17SP	00NR	4	FROM->TO	G17_109	FT THOMPSON (FT2 KU1B) 345/230/13.8KV TRANSFORMER CKT 1	300.9	0.03265	142.7212	GR ISLD-LNX3345.00 - GRAND ISLAND 345KV CKT Z
17SP	00NR	4	FROM->TO	G17_109	FT THOMPSON (FT2 KU1B) 345/230/13.8KV TRANSFORMER CKT 1	300.9	0.03265	142.7212	GR ISLD-LNX3345.00 - HOLT.CO3 345.00 345KV CKT 1
16WP	00NR	4	FROM->TO	G17_109	FT THOMPSON (FT2 KU1B) 345/230/13.8KV TRANSFORMER CKT 1	309.2	0.0325	125.5498	GR ISLD-LNX3345.00 - GRAND ISLAND 345KV CKT Z
16WP	00NR	4	FROM->TO	G17_109	FT THOMPSON (FT2 KU1B) 345/230/13.8KV TRANSFORMER CKT 1	309.2	0.0325	125.5498	GR ISLD-LNX3345.00 - HOLT.CO3 345.00 345KV CKT 1
16WP	00NR	4	FROM->TO	G17_109	FT THOMPSON (FT2 KU1B) 345/230/13.8KV TRANSFORMER CKT 1	309.4	0.0325	125.4687	GR ISLD-LNX3345.00 - GRAND ISLAND 345KV CKT Z
16WP	00NR	4	FROM->TO	G17_109	FT THOMPSON (FT2 KU1B) 345/230/13.8KV TRANSFORMER CKT 1	309.4	0.0325	125.4687	GR ISLD-LNX3345.00 - HOLT.CO3 345.00 345KV CKT 1
17SP	00NR	4	FROM->TO	G17_109	FT THOMPSON (FT2 KU1B) 345/230/13.8KV TRANSFORMER CKT 1	300	0.03265	106.5493	GRPRAR1-LNX3345.00 - YANKTON 345KV CKT Z
17SP	00NR	4	FROM->TO	G17_109	FT THOMPSON (FT2 KU1B) 345/230/13.8KV TRANSFORMER CKT 1	300.9	0.03265	106.2639	GRPRAR1-LNX3345.00 - YANKTON 345KV CKT Z
17SP	00NR	4	FROM->TO	G17_109	FT THOMPSON (FT2 KU1B) 345/230/13.8KV TRANSFORMER CKT 1	300	0.03265	105.7827	GRPRAR1-LNX3345.00 - HOLT.CO3 345.00 345KV CKT 1
17SP	00NR	4	FROM->TO	G17_109	FT THOMPSON (FT2 KU1B) 345/230/13.8KV TRANSFORMER CKT 1	300.9	0.03265	105.4663	GRPRAR1-LNX3345.00 - HOLT.CO3 345.00 345KV CKT 1
20SP	00NR	4	FROM->TO	G17_109	FT THOMPSON (FT2 KU1B) 345/230/13.8KV TRANSFORMER CKT 1	302.8	0.0324	103.424	GRPRAR1-LNX3345.00 - YANKTON 345KV CKT Z
20SP	00NR	4	FROM->TO	G17_109	FT THOMPSON (FT2 KU1B) 345/230/13.8KV TRANSFORMER CKT 1	303.2	0.0324	103.3206	GRPRAR1-LNX3345.00 - YANKTON 345KV CKT Z
25SP	00NR	4	FROM->TO	G17_109	FT THOMPSON (FT2 KU1B) 345/230/13.8KV TRANSFORMER CKT 1	303.2	0.03242	102.5311	GRPRAR1-LNX3345.00 - YANKTON 345KV CKT Z
25SP	00NR	4	FROM->TO	G17_109	FT THOMPSON (FT2 KU1B) 345/230/13.8KV TRANSFORMER CKT 1	303.6	0.03242	102.396	GRPRAR1-LNX3345.00 - YANKTON 345KV CKT Z
20SP	00NR	4	FROM->TO	G17_109	FT THOMPSON (FT2 KU1B) 345/230/13.8KV TRANSFORMER CKT 1	302.8	0.0324	102.3672	GRPRAR1-LNX3345.00 - HOLT.CO3 345.00 345KV CKT 1
20SP	00NR	4	FROM->TO	G17_109	FT THOMPSON (FT2 KU1B) 345/230/13.8KV TRANSFORMER CKT 1	303.2	0.0324	102.2652	GRPRAR1-LNX3345.00 - HOLT.CO3 345.00 345KV CKT 1
25SP	00NR	4	FROM->TO	G17_109	FT THOMPSON (FT2 KU1B) 345/230/13.8KV TRANSFORMER CKT 1	303.2	0.03242	101.4757	GRPRAR1-LNX3345.00 - HOLT.CO3 345.00 345KV CKT 1
25SP	00NR	4	FROM->TO	G17_109	FT THOMPSON (FT2 KU1B) 345/230/13.8KV TRANSFORMER CKT 1	303.6	0.03242	101.375	GRPRAR1-LNX3345.00 - HOLT.CO3 345.00 345KV CKT 1
20L	16NR	4	FROM->TO	G17_109	G14_001IST 115.00 - NEWELL 115KV CKT 1	88.4	0.04824	109.7701	MAURINE - NUNDRWD-LNX3230.00 230KV CKT 1
20L	16NR	4	FROM->TO	G17_109	G14_001IST 115.00 - NEWELL 115KV CKT 1	88.4	0.04824	109.7701	NUNDRWD - NUNDRWD-LNX3230.00 230KV CKT Z
17G	16NR	4	TO->FROM	G17_109	GARRISON - STANTONTAP 7115.00 115KV CKT 1	121	0.04556	106.7597	CENTER - COYOTE 345KV CKT 1
16WP	00NR	4	TO->FROM	G17_109	GARRISON - STANTONTAP 7115.00 115KV CKT 1	132	0.04262	105.2564	CENTER - COYOTE 345KV CKT 1
20WP	00NR	4	TO->FROM	G17_109	GARRISON - STANTONTAP 7115.00 115KV CKT 1	132	0.04006	103.8024	CENTER - COYOTE 345KV CKT 1
20L	16NR	4	TO->FROM	G17_109	GLENHAM - L3 HAWDON 230KV CKT 1	209.8	0.03324	110.3131	FT THOMPSON - FTTHOM1-LNX3345.00 345KV CKT Z
20L	16NR	4	TO->FROM	G17_109	GLENHAM - L3 HAWDON 230KV CKT 1	209.8	0.03324	110.3131	FTTHOM1-LNX3345.00 - G16-017-TAP 345.00 345KV CKT 1
20L	16NR	4	TO->FROM	G17_109	GLENHAM - L3 HAWDON 230KV CKT 1	209.8	0.03324	108.9784	P12:345:UMZB:# 108 #: LOS FT IN ND. LOS FT
20L	16NR	4	TO->FROM	G17_109	GLENHAM - L3 HAWDON 230KV CKT 1	209.8	0.03324	107.9775	LELAND OLDS - LELAND2-LNX3345.00 345KV CKT Z
20L	16NR	4	TO->FROM	G17_109	GLENHAM - L3 HAWDON 230KV CKT 1	209.8	0.03324	107.3102	G16-017-TAP 345.00 - LELAND2-LNX3345.00 345KV CKT 1
20L	16NR	4	TO->FROM	G17_109	GLENHAM - L3 HAWDON 230KV CKT 1	209.8	0.04766	104.0282	BISON - HETINGER 230KV CKT 1
20L	16NR	4	TO->FROM	G17_109	GLENHAM - L3 HAWDON 230KV CKT 1	209.8	0.04766	102.4076	BISON - MAURINE 230KV CKT 1

SEASON	GROUP	SCENARIO	DIRECTION	SOURCE	MONITORED ELEMENT	RATE (MVA)	TDF	CONTINGENCY LOADING %	CONTINGENCY
20L	16NR	4	TO->FROM	G17_109	GLENHAM - L3 HAWDON 230KV CKT 1	209.8	0.03151	100.1827	ANTELOP-LNX3345.00 - ANTELOPE VALLEY 345KV CKT Z
20L	16NR	4	TO->FROM	G17_109	GLENHAM - L3 HAWDON 230KV CKT 1	209.8	0.03151	100.135	P12:345:UMZB:# 102 #: AVS BD IN ND. AVS BRD LR
20L	16NR	4	TO->FROM	G17_109	GLENHAM - L3 HAWDON 230KV CKT 1	209.8	0.03151	100.135	P12:345:UMZB:# 103 #: BD IN SD. LOSS OF LINE
20L	16NR	4	FROM->TO	G17_109	MAURINE (MA KV1A) 230/115/13.8KV TRANSFORMER CKT 1	124.8	0.08186	112.1756	MAURINE - NUNDRWD-LNX3230.00 230KV CKT 1
20L	16NR	4	FROM->TO	G17_109	MAURINE (MA KV1A) 230/115/13.8KV TRANSFORMER CKT 1	124.8	0.08186	112.1756	NUNDRWD - NUNDRWD-LNX3230.00 230KV CKT Z
20L	16NR	4	FROM->TO	G17_109	MAURINE (MA KV1A) 230/115/13.8KV TRANSFORMER CKT 1	124.9	0.08186	112.1659	MAURINE - NUNDRWD-LNX3230.00 230KV CKT 1
20L	16NR	4	FROM->TO	G17_109	MAURINE (MA KV1A) 230/115/13.8KV TRANSFORMER CKT 1	124.9	0.08186	112.1659	NUNDRWD - NUNDRWD-LNX3230.00 230KV CKT Z
17SP	00NR	4	TO->FROM	G17_109	SCOTTSBLUFF - VICTORY HILL 115KV CKT 1	119.1	0.03193	101.1063	P13:230-345:NPPD:STEGALL3:KV3A
17SP	00NR	4	TO->FROM	G17_109	SCOTTSBLUFF - VICTORY HILL 115KV CKT 1	119.1	0.03193	101.1063	STEGALL - STEGALL TRANSFORMER 230KV CKT 1
17SP	00NR	4	TO->FROM	G17_109	SCOTTSBLUFF - VICTORY HILL 115KV CKT 1	119.1	0.03193	101.1063	STEGALL (SGQ KV3A) 345/230/13.8KV TRANSFORMER CKT 1
17SP	00NR	4	TO->FROM	G17_109	SPLIT ROCK - WHITE 345KV CKT 1	712.5	0.03072	107.513	LAKEFIELD 3 - LKFLDXL3 345KV CKT 1
20L	16NR	4	TO->FROM	G17_109	SPLIT ROCK - WHITE 345KV CKT 1	706.6	0.04366	105.5436	H081_SUB 345.00 - LYON COUNTY 345KV CKT 1
20L	16NR	4	TO->FROM	G17_109	SPLIT ROCK - WHITE 345KV CKT 1	706.6	0.04366	103.718	H081_SUB 345.00 - J460 POI 345.00 345KV CKT 1
20L	16NR	4	TO->FROM	G17_109	SPLIT ROCK - WHITE 345KV CKT 1	706.6	0.04366	101.7933	BROOKING COUNTY - J460 POI 345.00 345KV CKT 1
17G	16NR	5	FROM->TO	G17_109	BEULAH - STANTONTAP 7115.00 115KV CKT 1	121	0.04556	106.9249	CENTER - COYOTE 345KV CKT 1
16WP	00NR	5	FROM->TO	G17_109	BEULAH - STANTONTAP 7115.00 115KV CKT 1	132	0.04262	105.2564	CENTER - COYOTE 345KV CKT 1
20WP	00NR	5	FROM->TO	G17_109	BEULAH - STANTONTAP 7115.00 115KV CKT 1	132	0.04006	103.8024	CENTER - COYOTE 345KV CKT 1
25SP	00NR	5	FROM->TO	G17_109	DAWSON CREEK - FALLON 115KV CKT 1	88	0.0782	124.0045	DAWSON CREEK - MILES CITY EAST 230KV CKT 1
20SP	00NR	5	FROM->TO	G17_109	DAWSON CREEK - FALLON 115KV CKT 1	87.9	0.07818	117.6537	DAWSON CREEK - MILES CITY EAST 230KV CKT 1
17SP	00NR	5	FROM->TO	G17_109	DAWSON CREEK - FALLON 115KV CKT 1	87.8	0.07841	107.5071	DAWSON CREEK - MILES CITY EAST 230KV CKT 1
20L	16NR	5	FROM->TO	G17_109	DAWSON CREEK - FALLON 115KV CKT 1	87.8	0.07844	102.7344	DAWSON CREEK - MILES CITY EAST 230KV CKT 1
20WP	00NR	5	FROM->TO	G17_109	DAWSON CREEK - FALLON 115KV CKT 1	88	0.07749	101.7009	DAWSON CREEK - MILES CITY EAST 230KV CKT 1
17SP	00NR	5	FROM->TO	G17_109	FT THOMPSON (FT2 KU1A) 345/230/13.8KV TRANSFORMER CKT 1	300.1	0.0326	142.8964	GR ISLD-LNX3345.00 - GRAND ISLAND 345KV CKT Z
17SP	00NR	5	FROM->TO	G17_109	FT THOMPSON (FT2 KU1A) 345/230/13.8KV TRANSFORMER CKT 1	300.1	0.0326	142.8964	GR ISLD-LNX3345.00 - HOLT.CO3 345.00 345KV CKT 1
17SP	00NR	5	FROM->TO	G17_109	FT THOMPSON (FT2 KU1A) 345/230/13.8KV TRANSFORMER CKT 1	301	0.0326	142.4691	GR ISLD-LNX3345.00 - GRAND ISLAND 345KV CKT Z
17SP	00NR	5	FROM->TO	G17_109	FT THOMPSON (FT2 KU1A) 345/230/13.8KV TRANSFORMER CKT 1	301	0.0326	142.4691	GR ISLD-LNX3345.00 - HOLT.CO3 345.00 345KV CKT 1
16WP	00NR	5	FROM->TO	G17_109	FT THOMPSON (FT2 KU1A) 345/230/13.8KV TRANSFORMER CKT 1	309.2	0.03245	125.3506	GR ISLD-LNX3345.00 - GRAND ISLAND 345KV CKT Z
16WP	00NR	5	FROM->TO	G17_109	FT THOMPSON (FT2 KU1A) 345/230/13.8KV TRANSFORMER CKT 1	309.2	0.03245	125.3506	GR ISLD-LNX3345.00 - HOLT.CO3 345.00 345KV CKT 1
16WP	00NR	5	FROM->TO	G17_109	FT THOMPSON (FT2 KU1A) 345/230/13.8KV TRANSFORMER CKT 1	309.5	0.03245	125.2291	GR ISLD-LNX3345.00 - GRAND ISLAND 345KV CKT Z
16WP	00NR	5	FROM->TO	G17_109	FT THOMPSON (FT2 KU1A) 345/230/13.8KV TRANSFORMER CKT 1	309.5	0.03245	125.2291	GR ISLD-LNX3345.00 - HOLT.CO3 345.00 345KV CKT 1
17SP	00NR	5	FROM->TO	G17_109	FT THOMPSON (FT2 KU1A) 345/230/13.8KV TRANSFORMER CKT 1	300.1	0.0326	106.3752	GRPRAR1-LNX3345.00 - YANKTON 345KV CKT Z
17SP	00NR	5	FROM->TO	G17_109	FT THOMPSON (FT2 KU1A) 345/230/13.8KV TRANSFORMER CKT 1	301	0.0326	106.0904	GRPRAR1-LNX3345.00 - YANKTON 345KV CKT Z
17SP	00NR	5	FROM->TO	G17_109	FT THOMPSON (FT2 KU1A) 345/230/13.8KV TRANSFORMER CKT 1	300.1	0.0326	105.5755	GRPRAR1-LNX3345.00 - HOLT.CO3 345.00 345KV CKT 1
17SP	00NR	5	FROM->TO	G17_109	FT THOMPSON (FT2 KU1A) 345/230/13.8KV TRANSFORMER CKT 1	301	0.0326	105.293	GRPRAR1-LNX3345.00 - HOLT.CO3 345.00 345KV CKT 1
20SP	00NR	5	FROM->TO	G17_109	FT THOMPSON (FT2 KU1A) 345/230/13.8KV TRANSFORMER CKT 1	302.8	0.03235	103.2867	GRPRAR1-LNX3345.00 - YANKTON 345KV CKT Z
20SP	00NR	5	FROM->TO	G17_109	FT THOMPSON (FT2 KU1A) 345/230/13.8KV TRANSFORMER CKT 1	303.2	0.03235	103.1834	GRPRAR1-LNX3345.00 - YANKTON 345KV CKT Z
25SP	00NR	5	FROM->TO	G17_109	FT THOMPSON (FT2 KU1A) 345/230/13.8KV TRANSFORMER CKT 1	303.2	0.03237	102.3939	GRPRAR1-LNX3345.00 - YANKTON 345KV CKT Z
25SP	00NR	5	FROM->TO	G17_109	FT THOMPSON (FT2 KU1A) 345/230/13.8KV TRANSFORMER CKT 1	303.6	0.03237	102.259	GRPRAR1-LNX3345.00 - YANKTON 345KV CKT Z
20SP	00NR	5	FROM->TO	G17_109	FT THOMPSON (FT2 KU1A) 345/230/13.8KV TRANSFORMER CKT 1	302.8	0.03235	102.2299	GRPRAR1-LNX3345.00 - HOLT.CO3 345.00 345KV CKT 1
20SP	00NR	5	FROM->TO	G17_109	FT THOMPSON (FT2 KU1A) 345/230/13.8KV TRANSFORMER CKT 1	303.2	0.03235	102.095	GRPRAR1-LNX3345.00 - HOLT.CO3 345.00 345KV CKT 1
25SP	00NR	5	FROM->TO	G17_109	FT THOMPSON (FT2 KU1A) 345/230/13.8KV TRANSFORMER CKT 1	303.2	0.03237	101.3385	GRPRAR1-LNX3345.00 - HOLT.CO3 345.00 345KV CKT 1
25SP	00NR	5	FROM->TO	G17_109	FT THOMPSON (FT2 KU1A) 345/230/13.8KV TRANSFORMER CKT 1	303.6	0.03237	101.205	GRPRAR1-LNX3345.00 - HOLT.CO3 345.00 345KV CKT 1
17SP	00NR	5	FROM->TO	G17_109	FT THOMPSON (FT2 KU1B) 345/230/13.8KV TRANSFORMER CKT 1	300	0.03265	143.1493	GR ISLD-LNX3345.00 - GRAND ISLAND 345KV CKT Z
17SP	00NR	5	FROM->TO	G17_109	FT THOMPSON (FT2 KU1B) 345/230/13.8KV TRANSFORMER CKT 1	300	0.03265	143.1493	GR ISLD-LNX3345.00 - HOLT.CO3 345.00 345KV CKT 1
17SP	00NR	5	FROM->TO	G17_109	FT THOMPSON (FT2 KU1B) 345/230/13.8KV TRANSFORMER CKT 1	300.9	0.03265	142.7212	GR ISLD-LNX3345.00 - GRAND ISLAND 345KV CKT Z
17SP	00NR	5	FROM->TO	G17_109	FT THOMPSON (FT2 KU1B) 345/230/13.8KV TRANSFORMER CKT 1	300.9	0.03265	142.7212	GR ISLD-LNX3345.00 - HOLT.CO3 345.00 345KV CKT 1
16WP	00NR	5	FROM->TO	G17_109	FT THOMPSON (FT2 KU1B) 345/230/13.8KV TRANSFORMER CKT 1	309.2	0.0325	125.5498	GR ISLD-LNX3345.00 - GRAND ISLAND 345KV CKT Z
16WP	00NR	5	FROM->TO	G17_109	FT THOMPSON (FT2 KU1B) 345/230/13.8KV TRANSFORMER CKT 1	309.2	0.0325	125.5498	GR ISLD-LNX3345.00 - HOLT.CO3 345.00 345KV CKT 1
16WP	00NR	5	FROM->TO	G17_109	FT THOMPSON (FT2 KU1B) 345/230/13.8KV TRANSFORMER CKT 1	309.4	0.0325	125.4687	GR ISLD-LNX3345.00 - GRAND ISLAND 345KV CKT Z
16WP	00NR	5	FROM->TO	G17_109	FT THOMPSON (FT2 KU1B) 345/230/13.8KV TRANSFORMER CKT 1	309.4	0.0325	125.4687	GR ISLD-LNX3345.00 - HOLT.CO3 345.00 345KV CKT 1
17SP	00NR	5	FROM->TO	G17_109	FT THOMPSON (FT2 KU1B) 345/230/13.8KV TRANSFORMER CKT 1	300	0.03265	106.5493	GRPRAR1-LNX3345.00 - YANKTON 345KV CKT Z
17SP	00NR	5	FROM->TO	G17_109	FT THOMPSON (FT2 KU1B) 345/230/13.8KV TRANSFORMER CKT 1	300.9	0.03265	106.2639	GRPRAR1-LNX3345.00 - YANKTON 345KV CKT Z
17SP	00NR	5	FROM->TO	G17_109	FT THOMPSON (FT2 KU1B) 345/230/13.8KV TRANSFORMER CKT 1	300	0.03265	105.7827	GRPRAR1-LNX3345.00 - HOLT.CO3 345.00 345KV CKT 1

SEASON	GROUP	SCENARIO	DIRECTION	SOURCE	MONITORED ELEMENT	RATE (MVA)	TDF	CONTINGENCY LOADING %	CONTINGENCY
17SP	00NR	5	FROM->TO	G17_109	FT THOMPSON (FT2 KU1B) 345/230/13.8KV TRANSFORMER CKT 1	300.9	0.03265	105.4663	GRPRAR1-LNX3345.00 - HOLT.CO3 345.00 345KV CKT 1
20SP	00NR	5	FROM->TO	G17_109	FT THOMPSON (FT2 KU1B) 345/230/13.8KV TRANSFORMER CKT 1	302.8	0.0324	103.424	GRPRAR1-LNX3345.00 - YANKTON 345KV CKT Z
20SP	00NR	5	FROM->TO	G17_109	FT THOMPSON (FT2 KU1B) 345/230/13.8KV TRANSFORMER CKT 1	303.2	0.0324	103.3206	GRPRAR1-LNX3345.00 - YANKTON 345KV CKT Z
25SP	00NR	5	FROM->TO	G17_109	FT THOMPSON (FT2 KU1B) 345/230/13.8KV TRANSFORMER CKT 1	303.2	0.03242	102.5311	GRPRAR1-LNX3345.00 - YANKTON 345KV CKT Z
25SP	00NR	5	FROM->TO	G17_109	FT THOMPSON (FT2 KU1B) 345/230/13.8KV TRANSFORMER CKT 1	303.6	0.03242	102.396	GRPRAR1-LNX3345.00 - YANKTON 345KV CKT Z
20SP	00NR	5	FROM->TO	G17_109	FT THOMPSON (FT2 KU1B) 345/230/13.8KV TRANSFORMER CKT 1	302.8	0.0324	102.3672	GRPRAR1-LNX3345.00 - HOLT.CO3 345.00 345KV CKT 1
20SP	00NR	5	FROM->TO	G17_109	FT THOMPSON (FT2 KU1B) 345/230/13.8KV TRANSFORMER CKT 1	303.2	0.0324	102.2652	GRPRAR1-LNX3345.00 - HOLT.CO3 345.00 345KV CKT 1
25SP	00NR	5	FROM->TO	G17_109	FT THOMPSON (FT2 KU1B) 345/230/13.8KV TRANSFORMER CKT 1	303.2	0.03242	101.4757	GRPRAR1-LNX3345.00 - HOLT.CO3 345.00 345KV CKT 1
25SP	00NR	5	FROM->TO	G17_109	FT THOMPSON (FT2 KU1B) 345/230/13.8KV TRANSFORMER CKT 1	303.6	0.03242	101.375	GRPRAR1-LNX3345.00 - HOLT.CO3 345.00 345KV CKT 1
17G	16NR	5	TO->FROM	G17_109	GARRISON - STANTONTAP 7115.00 115KV CKT 1	121	0.04556	106.7597	CENTER - COYOTE 345KV CKT 1
16WP	00NR	5	TO->FROM	G17_109	GARRISON - STANTONTAP 7115.00 115KV CKT 1	132	0.04262	105.2564	CENTER - COYOTE 345KV CKT 1
20WP	00NR	5	TO->FROM	G17_109	GARRISON - STANTONTAP 7115.00 115KV CKT 1	132	0.04006	103.8024	CENTER - COYOTE 345KV CKT 1
20L	16NR	5	FROM->TO	G17_109	MAURINE (MA KV1A) 230/115/13.8KV TRANSFORMER CKT 1	124.8	0.08186	112.1756	MAURINE - NUNDRWD-LNX3230.00 230KV CKT 1
20L	16NR	5	FROM->TO	G17_109	MAURINE (MA KV1A) 230/115/13.8KV TRANSFORMER CKT 1	124.8	0.08186	112.1756	NUNDRWD - NUNDRWD-LNX3230.00 230KV CKT Z
20L	16NR	5	FROM->TO	G17_109	MAURINE (MA KV1A) 230/115/13.8KV TRANSFORMER CKT 1	124.9	0.08186	112.1659	MAURINE - NUNDRWD-LNX3230.00 230KV CKT 1
20L	16NR	5	FROM->TO	G17_109	MAURINE (MA KV1A) 230/115/13.8KV TRANSFORMER CKT 1	124.9	0.08186	112.1659	NUNDRWD - NUNDRWD-LNX3230.00 230KV CKT Z
17SP	00NR	5	TO->FROM	G17_109	SPLIT ROCK - WHITE 345KV CKT 1	712.5	0.03072	107.513	LAKEFIELD 3 - LKFLDXL3 345KV CKT 1
20L	16NR	5	TO->FROM	G17_109	SPLIT ROCK - WHITE 345KV CKT 1	706.6	0.04366	105.5436	H081_SUB 345.00 - LYON COUNTY 345KV CKT 1
20L	16NR	5	TO->FROM	G17_109	SPLIT ROCK - WHITE 345KV CKT 1	706.6	0.04366	103.718	H081_SUB 345.00 - J460 POI 345.00 345KV CKT 1
20L	16NR	5	TO->FROM	G17_109	SPLIT ROCK - WHITE 345KV CKT 1	706.6	0.04366	101.7933	BROOKING COUNTY - J460 POI 345.00 345KV CKT 1
17G	16NR	6	FROM->TO	G17_109	BEULAH - STANTONTAP 7115.00 115KV CKT 1	121	0.04556	106.9249	CENTER - COYOTE 345KV CKT 1
16WP	00NR	6	FROM->TO	G17_109	BEULAH - STANTONTAP 7115.00 115KV CKT 1	132	0.04262	105.2564	CENTER - COYOTE 345KV CKT 1
20WP	00NR	6	FROM->TO	G17_109	BEULAH - STANTONTAP 7115.00 115KV CKT 1	132	0.04006	103.8024	CENTER - COYOTE 345KV CKT 1
25SP	00NR	6	FROM->TO	G17_109	DAWSON CREEK - FALLON 115KV CKT 1	88	0.0782	124.0045	DAWSON CREEK - MILES CITY EAST 230KV CKT 1
20SP	00NR	6	FROM->TO	G17_109	DAWSON CREEK - FALLON 115KV CKT 1	87.9	0.07818	117.6537	DAWSON CREEK - MILES CITY EAST 230KV CKT 1
17SP	00NR	6	FROM->TO	G17_109	DAWSON CREEK - FALLON 115KV CKT 1	87.8	0.07841	107.5071	DAWSON CREEK - MILES CITY EAST 230KV CKT 1
20L	16NR	6	FROM->TO	G17_109	DAWSON CREEK - FALLON 115KV CKT 1	87.8	0.07844	102.7344	DAWSON CREEK - MILES CITY EAST 230KV CKT 1
20WP	00NR	6	FROM->TO	G17_109	DAWSON CREEK - FALLON 115KV CKT 1	88	0.07749	101.7009	DAWSON CREEK - MILES CITY EAST 230KV CKT 1
17G	16NR	6	TO->FROM	G17_109	GARRISON - STANTONTAP 7115.00 115KV CKT 1	121	0.04556	106.7597	CENTER - COYOTE 345KV CKT 1
16WP	00NR	6	TO->FROM	G17_109	GARRISON - STANTONTAP 7115.00 115KV CKT 1	132	0.04262	105.2564	CENTER - COYOTE 345KV CKT 1
20WP	00NR	6	TO->FROM	G17_109	GARRISON - STANTONTAP 7115.00 115KV CKT 1	132	0.04006	103.8024	CENTER - COYOTE 345KV CKT 1
17SP	00NR	6	TO->FROM	G17_109	SPLIT ROCK - WHITE 345KV CKT 1	712.5	0.03072	107.513	LAKEFIELD 3 - LKFLDXL3 345KV CKT 1
20L	16NR	6	TO->FROM	G17_109	SPLIT ROCK - WHITE 345KV CKT 1	706.6	0.04366	105.5436	H081_SUB 345.00 - LYON COUNTY 345KV CKT 1
20L	16NR	6	TO->FROM	G17_109	SPLIT ROCK - WHITE 345KV CKT 1	706.6	0.04366	103.718	H081_SUB 345.00 - J460 POI 345.00 345KV CKT 1
20L	16NR	6	TO->FROM	G17_109	SPLIT ROCK - WHITE 345KV CKT 1	706.6	0.04366	101.7933	BROOKING COUNTY - J460 POI 345.00 345KV CKT 1
17SP	00NR	7	TO->FROM	G17_109	SPLIT ROCK - WHITE 345KV CKT 1	712.5	0.03072	107.513	LAKEFIELD 3 - LKFLDXL3 345KV CKT 1
20L	16NR	7	TO->FROM	G17_109	SPLIT ROCK - WHITE 345KV CKT 1	706.6	0.04366	105.5578	H081_SUB 345.00 - LYON COUNTY 345KV CKT 1
20L	16NR	7	TO->FROM	G17_109	SPLIT ROCK - WHITE 345KV CKT 1	706.6	0.04366	103.718	H081_SUB 345.00 - J460 POI 345.00 345KV CKT 1
20L	16NR	7	TO->FROM	G17_109	SPLIT ROCK - WHITE 345KV CKT 1	706.6	0.04366	101.7933	BROOKING COUNTY - J460 POI 345.00 345KV CKT 1

11.8 H: POWER FLOW ANALYSIS (OTHER CONSTRAINTS NOT REQUIRING TRANSMISSION REINFORCEMENT)

Available upon request

11.9 H-AS: POWER FLOW ANALYSIS (OTHER CONSTRAINTS POTENTIALLY REQUIRING AFFECTED SYSTEM MITIGATION)

Available upon request

SEASON	GROUP	SCENARIO	DIRECTION	SOURCE	MONITORED ELEMENT	RATE (MVA)	TDF	CONTINGENCY LOADING %	CONTINGENCY
17SP	16ALL	0	TO->FROM	G17_109	AUDUBON - SHEYNNE 230KV CKT 1	279	0.03589	100.7928	FORBES - ROSEAU 500KV CKT 1
17SP	16ALL	0	TO->FROM	G17_109	AUDUBON - SHEYNNE 230KV CKT 1	279	0.03589	101.4738	ROSEAU - ROSEAUM 2 500.00 500KV CKT 1
17SP	16ALL	0	TO->FROM	G17_109	AUDUBON - SHEYNNE 230KV CKT 1	279	0.03589	101.4738	ROSEAU - ROSEAUM 2 500.00 500KV CKT 1
17SP	16ALL	0	TO->FROM	G17_109	AUDUBON - SHEYNNE 230KV CKT 1	279	0.03589	102.1548	RIEL - ROSEAU 500KV CKT 1
25SP	16ALL	0	TO->FROM	G17_109	AUDUBON - SHEYNNE 230KV CKT 1	278.7	0.03447	99.9914	FORBES - ROSEAU 500KV CKT 1
25SP	16ALL	0	TO->FROM	G17_109	AUDUBON - SHEYNNE 230KV CKT 1	278.7	0.03447	100.6014	ROSEAU - ROSEAUM 2 500.00 500KV CKT 1
25SP	16ALL	0	TO->FROM	G17_109	AUDUBON - SHEYNNE 230KV CKT 1	278.7	0.03447	100.6014	ROSEAU - ROSEAUM 2 500.00 500KV CKT 1
25SP	16ALL	0	TO->FROM	G17_109	AUDUBON - SHEYNNE 230KV CKT 1	278.7	0.03447	101.2113	RIEL - ROSEAU 500KV CKT 1
20SP	16ALL	0	TO->FROM	G17_109	AUDUBON - SHEYNNE 230KV CKT 1	278.5	0.03421	100.316	RIEL - ROSEAU 500KV CKT 1
20L	16NR	0	TO->FROM	G17_109	BEULAH - COYOTE 115KV CKT 1	102	0.04078	179.0682	CENTER - COYOTE 345KV CKT 1
17G	16NR	0	TO->FROM	G17_109	BEULAH - COYOTE 115KV CKT 1	102	0.03975	306.2941	CENTER - COYOTE 345KV CKT 1
20L	16ALL	0	TO->FROM	G17_109	BEULAH - COYOTE 115KV CKT 1	102	0.03919	178.7451	CENTER - COYOTE 345KV CKT 1
20L	13ALL	0	TO->FROM	G17_109	BEULAH - COYOTE 115KV CKT 1	101.9	0.03902	148.9812	CENTER - COYOTE 345KV CKT 1
16WP	00NR	0	TO->FROM	G17_109	BEULAH - COYOTE 115KV CKT 1	123	0.03878	265.1298	CENTER - COYOTE 345KV CKT 1
17SP	00NR	0	TO->FROM	G17_109	BEULAH - COYOTE 115KV CKT 1	101.9	0.03876	269.5811	CENTER - COYOTE 345KV CKT 1
20SP	00NR	0	TO->FROM	G17_109	BEULAH - COYOTE 115KV CKT 1	101.9	0.03876	224.7333	CENTER - COYOTE 345KV CKT 1
25SP	00NR	0	TO->FROM	G17_109	BEULAH - COYOTE 115KV CKT 1	101.9	0.03874	239.3492	CENTER - COYOTE 345KV CKT 1
20WP	00NR	0	TO->FROM	G17_109	BEULAH - COYOTE 115KV CKT 1	122.9	0.03851	255.918	CENTER - COYOTE 345KV CKT 1
20WP	16ALL	0	TO->FROM	G17_109	BEULAH - COYOTE 115KV CKT 1	122.9	0.03832	264.7453	CENTER - COYOTE 345KV CKT 1
20WP	13ALL	0	TO->FROM	G17_109	BEULAH - COYOTE 115KV CKT 1	122.7	0.03831	241.4689	CENTER - COYOTE 345KV CKT 1
20SP	16ALL	0	TO->FROM	G17_109	BEULAH - COYOTE 115KV CKT 1	101.9	0.03829	234.0098	CENTER - COYOTE 345KV CKT 1
20WP	00W	0	TO->FROM	G17_109	BEULAH - COYOTE 115KV CKT 1	122.7	0.03828	240.0978	CENTER - COYOTE 345KV CKT 1
20SP	13ALL	0	TO->FROM	G17_109	BEULAH - COYOTE 115KV CKT 1	102	0.03827	204.2828	CENTER - COYOTE 345KV CKT 1
20SP	00S	0	TO->FROM	G17_109	BEULAH - COYOTE 115KV CKT 1	102	0.03825	202.549	CENTER - COYOTE 345KV CKT 1
17G	16ALL	0	TO->FROM	G17_109	BEULAH - COYOTE 115KV CKT 1	102	0.03825	305.6549	CENTER - COYOTE 345KV CKT 1
25SP	16ALL	0	TO->FROM	G17_109	BEULAH - COYOTE 115KV CKT 1	101.9	0.03824	249.5976	CENTER - COYOTE 345KV CKT 1
25SP	13ALL	0	TO->FROM	G17_109	BEULAH - COYOTE 115KV CKT 1	102	0.03823	220.1606	CENTER - COYOTE 345KV CKT 1
17G	13ALL	0	TO->FROM	G17_109	BEULAH - COYOTE 115KV CKT 1	102	0.03821	275.662	CENTER - COYOTE 345KV CKT 1
25SP	00S	0	TO->FROM	G17_109	BEULAH - COYOTE 115KV CKT 1	102	0.0382	217.549	CENTER - COYOTE 345KV CKT 1
16WP	16ALL	0	TO->FROM	G17_109	BEULAH - COYOTE 115KV CKT 1	123	0.03807	270.6504	CENTER - COYOTE 345KV CKT 1
16WP	00W	0	TO->FROM	G17_109	BEULAH - COYOTE 115KV CKT 1	122.8	0.03806	247.9642	CENTER - COYOTE 345KV CKT 1
16WP	13ALL	0	TO->FROM	G17_109	BEULAH - COYOTE 115KV CKT 1	122.9	0.03804	247.4415	CENTER - COYOTE 345KV CKT 1
17SP	16ALL	0	TO->FROM	G17_109	BEULAH - COYOTE 115KV CKT 1	101.9	0.03798	275.4308	CENTER - COYOTE 345KV CKT 1
17SP	13ALL	0	TO->FROM	G17_109	BEULAH - COYOTE 115KV CKT 1	102	0.03796	247.6207	CENTER - COYOTE 345KV CKT 1
17SP	00S	0	TO->FROM	G17_109	BEULAH - COYOTE 115KV CKT 1	102	0.03794	248.0392	CENTER - COYOTE 345KV CKT 1
17G	16ALL	0	FROM->TO	G17_109	BEULAH - STANTONTAP 7115.00 115KV CKT 1	121	0.03639	101.1636	CENTER - COYOTE 345KV CKT 1
16WP	16ALL	0	FROM->TO	G17_109	BEULAH - STANTONTAP 7115.00 115KV CKT 1	131.9	0.03595	105.1069	CENTER - COYOTE 345KV CKT 1
20WP	16ALL	0	FROM->TO	G17_109	BEULAH - STANTONTAP 7115.00 115KV CKT 1	132	0.03412	105.4061	CENTER - COYOTE 345KV CKT 1
17SP	16ALL	0	TO->FROM	G17_109	BISON - HETINGER 230KV CKT 1	234	0.18983	120.4444	BELFIELD - DAGLUM 4230.00 230KV CKT 1
25SP	16ALL	0	TO->FROM	G17_109	BISON - HETINGER 230KV CKT 1	233.8	0.18806	115.7759	BELFIELD - DAGLUM 4230.00 230KV CKT 1
20SP	16ALL	0	TO->FROM	G17_109	BISON - HETINGER 230KV CKT 1	234.2	0.18749	113.3202	BELFIELD - DAGLUM 4230.00 230KV CKT 1
17SP	16ALL	0	TO->FROM	G17_109	BISON - HETINGER 230KV CKT 1	234	0.17168	114.6957	G16-017-TAP 345.00 - LELAND2-LNX3345.00 345KV CKT 1
17SP	16ALL	0	TO->FROM	G17_109	BISON - HETINGER 230KV CKT 1	234	0.17168	115.2513	LELAND OLDS - LELAND2-LNX3345.00 345KV CKT Z
17SP	16ALL	0	TO->FROM	G17_109	BISON - HETINGER 230KV CKT 1	234	0.17168	115.5077	P12:345:UMZB:# 108 #: LOS FT IN ND. LOS FT
17SP	16ALL	0	TO->FROM	G17_109	BISON - HETINGER 230KV CKT 1	234	0.17168	116.5761	FT THOMPSON - FTTHOM1-LNX3345.00 345KV CKT Z
17SP	16ALL	0	TO->FROM	G17_109	BISON - HETINGER 230KV CKT 1	234	0.17168	116.5761	FTTHOM1-LNX3345.00 - G16-017-TAP 345.00 345KV CKT 1
17SP	16ALL	0	TO->FROM	G17_109	BISON - HETINGER 230KV CKT 1	234	0.16935	112.6684	BROADLAND - HURON 230KV CKT 1
17SP	16ALL	0	TO->FROM	G17_109	BISON - HETINGER 230KV CKT 1	234	0.16935	112.7111	P13:345:UMZB:# 244 #: BD IN SD. LOSS OF TX
17SP	16ALL	0	TO->FROM	G17_109	BISON - HETINGER 230KV CKT 1	234	0.16935	112.7111	HURON (BD KU2A) 345/230/13.8KV TRANSFORMER CKT 1
17SP	16ALL	0	TO->FROM	G17_109	BISON - HETINGER 230KV CKT 1	234	0.16935	112.7111	ANTELOP-LNX3345.00 - BRDLAND-LNX3345.00 345KV CKT 1
17SP	16ALL	0	TO->FROM	G17_109	BISON - HETINGER 230KV CKT 1	234	0.16935	112.7111	BRDLAND-LNX3345.00 - HURON 345KV CKT Z
17SP	16ALL	0	TO->FROM	G17_109	BISON - HETINGER 230KV CKT 1	234	0.16935	113.053	P12:345:UMZB:# 103 #: BD IN SD. LOSS OF LINE
17SP	16ALL	0	TO->FROM	G17_109	BISON - HETINGER 230KV CKT 1	234	0.16935	113.053	P12:345:UMZB:# 102 #: AVS BD IN ND. AVS BRD LR
17SP	16ALL	0	TO->FROM	G17_109	BISON - HETINGER 230KV CKT 1	234	0.16935	113.053	ANTELOP-LNX3345.00 - ANTELOPE VALLEY 345KV CKT Z
25SP	16ALL	0	TO->FROM	G17_109	BISON - HETINGER 230KV CKT 1	233.8	0.16915	114.1146	G16-017-TAP 345.00 - LELAND2-LNX3345.00 345KV CKT 1

SEASON	GROUP	SCENARIO	DIRECTION	SOURCE	MONITORED ELEMENT	RATE (MVA)	TDF	CONTINGENCY LOADING %	CONTINGENCY
25SP	16ALL	0	TO->FROM	G17_109	BISON - HETINGER 230KV CKT 1	233.8	0.16915	114.6279	LELAND OLDS - LELAND2-LNX3345.00 345KV CKT Z
25SP	16ALL	0	TO->FROM	G17_109	BISON - HETINGER 230KV CKT 1	233.8	0.16915	114.9273	P12:345:UMZB:# 108 #: LOS FT IN ND. LOS FT
25SP	16ALL	0	TO->FROM	G17_109	BISON - HETINGER 230KV CKT 1	233.8	0.16915	115.9966	FT THOMPSON - FTTHOM1-LNX3345.00 345KV CKT Z
25SP	16ALL	0	TO->FROM	G17_109	BISON - HETINGER 230KV CKT 1	233.8	0.16915	115.9966	FTTHOM1-LNX3345.00 - G16-017-TAP 345.00 345KV CKT 1
20SP	16ALL	0	TO->FROM	G17_109	BISON - HETINGER 230KV CKT 1	234.2	0.16853	109.6892	G16-017-TAP 345.00 - LELAND2-LNX3345.00 345KV CKT 1
20SP	16ALL	0	TO->FROM	G17_109	BISON - HETINGER 230KV CKT 1	234.2	0.16853	110.1588	LELAND OLDS - LELAND2-LNX3345.00 345KV CKT Z
20SP	16ALL	0	TO->FROM	G17_109	BISON - HETINGER 230KV CKT 1	234.2	0.16853	110.5004	P12:345:UMZB:# 108 #: LOS FT IN ND. LOS FT
20SP	16ALL	0	TO->FROM	G17_109	BISON - HETINGER 230KV CKT 1	234.2	0.16853	111.5679	FTTHOM1-LNX3345.00 - G16-017-TAP 345.00 345KV CKT 1
20SP	16ALL	0	TO->FROM	G17_109	BISON - HETINGER 230KV CKT 1	234.2	0.16853	111.5679	FT THOMPSON - FTTHOM1-LNX3345.00 345KV CKT Z
25SP	16ALL	0	TO->FROM	G17_109	BISON - HETINGER 230KV CKT 1	233.8	0.16671	111.6852	ANTELOP-LNX3345.00 - BRDLAND-LNX3345.00 345KV CKT 1
25SP	16ALL	0	TO->FROM	G17_109	BISON - HETINGER 230KV CKT 1	233.8	0.16671	111.6852	BRDLAND-LNX3345.00 - HURON 345KV CKT Z
25SP	16ALL	0	TO->FROM	G17_109	BISON - HETINGER 230KV CKT 1	233.8	0.16671	111.6852	HURON (BD KU2A) 345/230/13.8KV TRANSFORMER CKT 1
25SP	16ALL	0	TO->FROM	G17_109	BISON - HETINGER 230KV CKT 1	233.8	0.16671	111.6852	P13:345:UMZB:# 244 #: BD IN SD. LOSS OF TX
25SP	16ALL	0	TO->FROM	G17_109	BISON - HETINGER 230KV CKT 1	233.8	0.16671	111.6852	BROADLAND - HURON 230KV CKT 1
25SP	16ALL	0	TO->FROM	G17_109	BISON - HETINGER 230KV CKT 1	233.8	0.16671	111.9846	ANTELOP-LNX3345.00 - ANTELOPE VALLEY 345KV CKT Z
25SP	16ALL	0	TO->FROM	G17_109	BISON - HETINGER 230KV CKT 1	233.8	0.16671	111.9846	P12:345:UMZB:# 102 #: AVS BD IN ND. AVS BRD LR
25SP	16ALL	0	TO->FROM	G17_109	BISON - HETINGER 230KV CKT 1	233.8	0.16671	111.9846	P12:345:UMZB:# 103 #: BD IN SD. LOSS OF LINE
20SP	16ALL	0	TO->FROM	G17_109	BISON - HETINGER 230KV CKT 1	234.2	0.16611	107.3954	BROADLAND - HURON 230KV CKT 1
20SP	16ALL	0	TO->FROM	G17_109	BISON - HETINGER 230KV CKT 1	234.2	0.16611	107.4381	BRDLAND-LNX3345.00 - HURON 345KV CKT Z
20SP	16ALL	0	TO->FROM	G17_109	BISON - HETINGER 230KV CKT 1	234.2	0.16611	107.4381	ANTELOP-LNX3345.00 - BRDLAND-LNX3345.00 345KV CKT 1
20SP	16ALL	0	TO->FROM	G17_109	BISON - HETINGER 230KV CKT 1	234.2	0.16611	107.4381	HURON (BD KU2A) 345/230/13.8KV TRANSFORMER CKT 1
20SP	16ALL	0	TO->FROM	G17_109	BISON - HETINGER 230KV CKT 1	234.2	0.16611	107.4381	P13:345:UMZB:# 244 #: BD IN SD. LOSS OF TX
20SP	16ALL	0	TO->FROM	G17_109	BISON - HETINGER 230KV CKT 1	234.2	0.16611	107.6943	ANTELOP-LNX3345.00 - ANTELOPE VALLEY 345KV CKT Z
20SP	16ALL	0	TO->FROM	G17_109	BISON - HETINGER 230KV CKT 1	234.2	0.16611	107.6943	P12:345:UMZB:# 102 #: AVS BD IN ND. AVS BRD LR
20SP	16ALL	0	TO->FROM	G17_109	BISON - HETINGER 230KV CKT 1	234.2	0.16611	107.6943	P12:345:UMZB:# 103 #: BD IN SD. LOSS OF LINE
17SP	16ALL	0	TO->FROM	G17_109	BISON - HETINGER 230KV CKT 1	234	0.16208	114.4188	FORBES - ROSEAU 500KV CKT 1
17SP	16ALL	0	TO->FROM	G17_109	BISON - HETINGER 230KV CKT 1	234	0.16208	114.8461	ROSEAU - ROSEAUM 2 500.00 500KV CKT 1
17SP	16ALL	0	TO->FROM	G17_109	BISON - HETINGER 230KV CKT 1	234	0.16208	114.8461	ROSEAU - ROSEAUM 2 500.00 500KV CKT 1
17SP	16ALL	0	TO->FROM	G17_109	BISON - HETINGER 230KV CKT 1	234	0.16208	115.2308	RIEL - ROSEAU 500KV CKT 1
17SP	16ALL	0	TO->FROM	G17_109	BISON - HETINGER 230KV CKT 1	234	0.15981	112.5504	LARAMIE RIVER 345/24.0KV TRANSFORMER CKT 1
17SP	16ALL	0	TO->FROM	G17_109	BISON - HETINGER 230KV CKT 1	234	0.15972	110.7709	P12:230:UMZB:# 112 #: NU IN SD. NU-RCDC & DRY CREEK XFMR
25SP	16ALL	0	TO->FROM	G17_109	BISON - HETINGER 230KV CKT 1	233.8	0.15949	112.4157	FORBES - ROSEAU 500KV CKT 1
25SP	16ALL	0	TO->FROM	G17_109	BISON - HETINGER 230KV CKT 1	233.8	0.15949	112.7579	ROSEAU - ROSEAUM 2 500.00 500KV CKT 1
25SP	16ALL	0	TO->FROM	G17_109	BISON - HETINGER 230KV CKT 1	233.8	0.15949	112.7579	ROSEAU - ROSEAUM 2 500.00 500KV CKT 1
25SP	16ALL	0	TO->FROM	G17_109	BISON - HETINGER 230KV CKT 1	233.8	0.15949	113.1001	RIEL - ROSEAU 500KV CKT 1
20SP	16ALL	0	TO->FROM	G17_109	BISON - HETINGER 230KV CKT 1	234.2	0.15895	109.0743	FORBES - ROSEAU 500KV CKT 1
20SP	16ALL	0	TO->FROM	G17_109	BISON - HETINGER 230KV CKT 1	234.2	0.15895	109.4159	ROSEAU - ROSEAUM 2 500.00 500KV CKT 1
20SP	16ALL	0	TO->FROM	G17_109	BISON - HETINGER 230KV CKT 1	234.2	0.15895	109.4159	ROSEAU - ROSEAUM 2 500.00 500KV CKT 1
20SP	16ALL	0	TO->FROM	G17_109	BISON - HETINGER 230KV CKT 1	234.2	0.15895	109.8002	RIEL - ROSEAU 500KV CKT 1
25SP	16ALL	0	TO->FROM	G17_109	BISON - HETINGER 230KV CKT 1	233.8	0.15744	111.4457	LARAMIE RIVER 345/24.0KV TRANSFORMER CKT 1
25SP	16ALL	0	TO->FROM	G17_109	BISON - HETINGER 230KV CKT 1	233.8	0.15736	110.2481	P12:230:UMZB:# 112 #: NU IN SD. NU-RCDC & DRY CREEK XFMR
20SP	16ALL	0	TO->FROM	G17_109	BISON - HETINGER 230KV CKT 1	234.2	0.1569	107.585	LARAMIE RIVER 345/24.0KV TRANSFORMER CKT 1
20SP	16ALL	0	TO->FROM	G17_109	BISON - HETINGER 230KV CKT 1	234.2	0.15682	106.4389	P12:230:UMZB:# 112 #: NU IN SD. NU-RCDC & DRY CREEK XFMR
17SP	16ALL	0	TO->FROM	G17_109	BUFFALO - JAMESTOWN 345KV CKT 1	704.7	0.10883	112.0959	CNTSHNT3 345.00 - PRAIRIE3 345.00 345KV CKT 1
17SP	16ALL	0	TO->FROM	G17_109	BUFFALO - JAMESTOWN 345KV CKT 1	704.7	0.10883	112.0959	CENTER - CNTSHNT3 345.00 345KV CKT Z1
17G	16ALL	0	TO->FROM	G17_109	BUFFALO - JAMESTOWN 345KV CKT 1	705	0.10761	106.1906	CENTER - CNTSHNT3 345.00 345KV CKT Z1
17G	16ALL	0	TO->FROM	G17_109	BUFFALO - JAMESTOWN 345KV CKT 1	705	0.10761	106.1906	CNTSHNT3 345.00 - PRAIRIE3 345.00 345KV CKT 1
16WP	16ALL	0	TO->FROM	G17_109	BUFFALO - JAMESTOWN 345KV CKT 1	716.8	0.10712	107.0552	CENTER - CNTSHNT3 345.00 345KV CKT Z1
16WP	16ALL	0	TO->FROM	G17_109	BUFFALO - JAMESTOWN 345KV CKT 1	716.8	0.10712	107.0552	CNTSHNT3 345.00 - PRAIRIE3 345.00 345KV CKT 1
25SP	16ALL	0	TO->FROM	G17_109	BUFFALO - JAMESTOWN 345KV CKT 1	704.9	0.107	118.5984	CENTER - CNTSHNT3 345.00 345KV CKT Z1
25SP	16ALL	0	TO->FROM	G17_109	BUFFALO - JAMESTOWN 345KV CKT 1	704.9	0.107	118.5984	CNTSHNT3 345.00 - PRAIRIE3 345.00 345KV CKT 1
17SP	16ALL	0	TO->FROM	G17_109	BUFFALO - JAMESTOWN 345KV CKT 1	704.7	0.10689	104.7163	GROTON-LNX3 345.00 - LELAND1-LNX3345.00 345KV CKT 1
17SP	16ALL	0	TO->FROM	G17_109	BUFFALO - JAMESTOWN 345KV CKT 1	704.7	0.10689	104.7163	GROTON - GROTON-LNX3 345.00 345KV CKT Z
17SP	16ALL	0	TO->FROM	G17_109	BUFFALO - JAMESTOWN 345KV CKT 1	704.7	0.10689	104.9718	LELAND OLDS - LELAND1-LNX3345.00 345KV CKT Z
17SP	16ALL	0	TO->FROM	G17_109	BUFFALO - JAMESTOWN 345KV CKT 1	704.7	0.10689	105.0002	P12:345:UMZB:# 109 #: LOS GRT IN ND. LOS GRT

SEASON	GROUP	SCENARIO	DIRECTION	SOURCE	MONITORED ELEMENT	RATE (MVA)	TDF	CONTINGENCY LOADING %	CONTINGENCY
20SP	16ALL	0	TO->FROM	G17_109	BUFFALO - JAMESTOWN 345KV CKT 1	704.8	0.10663	112.2934	CNTSHNT3 345.00 - PRAIRIE3 345.00 345KV CKT 1
20SP	16ALL	0	TO->FROM	G17_109	BUFFALO - JAMESTOWN 345KV CKT 1	704.8	0.10663	112.2934	CENTER - CNTSHNT3 345.00 345KV CKT Z1
17SP	16ALL	0	TO->FROM	G17_109	BUFFALO - JAMESTOWN 345KV CKT 1	704.7	0.10625	103.7696	FT THOMPSON - FTTHOM1-LNX3345.00 345KV CKT Z
17SP	16ALL	0	TO->FROM	G17_109	BUFFALO - JAMESTOWN 345KV CKT 1	704.7	0.10625	103.7696	FTTHOM1-LNX3345.00 - G16-017-TAP 345.00 345KV CKT 1
17SP	16ALL	0	TO->FROM	G17_109	BUFFALO - JAMESTOWN 345KV CKT 1	704.7	0.10609	103.534	P13:345:UMZB:# 244 #: BD IN SD. LOSS OF TX
17SP	16ALL	0	TO->FROM	G17_109	BUFFALO - JAMESTOWN 345KV CKT 1	704.7	0.10609	103.534	HURON (BD KU2A) 345/230/13.8KV TRANSFORMER CKT 1
17SP	16ALL	0	TO->FROM	G17_109	BUFFALO - JAMESTOWN 345KV CKT 1	704.7	0.10609	103.6617	ANTELOP-LNX3345.00 - ANTELOPE VALLEY 345KV CKT Z
17SP	16ALL	0	TO->FROM	G17_109	BUFFALO - JAMESTOWN 345KV CKT 1	704.7	0.10609	103.6901	P12:345:UMZB:# 103 #: BD IN SD. LOSS OF LINE
17SP	16ALL	0	TO->FROM	G17_109	BUFFALO - JAMESTOWN 345KV CKT 1	704.7	0.10609	103.6901	P12:345:UMZB:# 102 #: AVS BD IN ND. AVS BRD LR
25SP	16ALL	0	TO->FROM	G17_109	BUFFALO - JAMESTOWN 345KV CKT 1	704.9	0.10492	109.7109	GROTON - GROTON-LNX3 345.00 345KV CKT Z
25SP	16ALL	0	TO->FROM	G17_109	BUFFALO - JAMESTOWN 345KV CKT 1	704.9	0.10492	109.7109	GROTON-LNX3 345.00 - LELAND1-LNX3345.00 345KV CKT 1
25SP	16ALL	0	TO->FROM	G17_109	BUFFALO - JAMESTOWN 345KV CKT 1	704.9	0.10492	109.9237	LELAND OLDS - LELAND1-LNX3345.00 345KV CKT Z
25SP	16ALL	0	TO->FROM	G17_109	BUFFALO - JAMESTOWN 345KV CKT 1	704.9	0.10492	109.9379	P12:345:UMZB:# 109 #: LOS GRT IN ND. LOS GRT
20WP	16ALL	0	TO->FROM	G17_109	BUFFALO - JAMESTOWN 345KV CKT 1	716.8	0.10479	105.582	CENTER - CNTSHNT3 345.00 345KV CKT Z1
20WP	16ALL	0	TO->FROM	G17_109	BUFFALO - JAMESTOWN 345KV CKT 1	716.8	0.10479	105.582	CNTSHNT3 345.00 - PRAIRIE3 345.00 345KV CKT 1
20SP	16ALL	0	TO->FROM	G17_109	BUFFALO - JAMESTOWN 345KV CKT 1	704.8	0.10463	104.4013	GROTON - GROTON-LNX3 345.00 345KV CKT Z
20SP	16ALL	0	TO->FROM	G17_109	BUFFALO - JAMESTOWN 345KV CKT 1	704.8	0.10463	104.4013	GROTON-LNX3 345.00 - LELAND1-LNX3345.00 345KV CKT 1
20SP	16ALL	0	TO->FROM	G17_109	BUFFALO - JAMESTOWN 345KV CKT 1	704.8	0.10463	104.5999	LELAND OLDS - LELAND1-LNX3345.00 345KV CKT Z
20SP	16ALL	0	TO->FROM	G17_109	BUFFALO - JAMESTOWN 345KV CKT 1	704.8	0.10463	104.6283	P12:345:UMZB:# 109 #: LOS GRT IN ND. LOS GRT
25SP	16ALL	0	TO->FROM	G17_109	BUFFALO - JAMESTOWN 345KV CKT 1	704.9	0.10447	109.1128	FTTHOM1-LNX3345.00 - G16-017-TAP 345.00 345KV CKT 1
25SP	16ALL	0	TO->FROM	G17_109	BUFFALO - JAMESTOWN 345KV CKT 1	704.9	0.10447	109.1128	FT THOMPSON - FTTHOM1-LNX3345.00 345KV CKT Z
20SP	16ALL	0	TO->FROM	G17_109	BUFFALO - JAMESTOWN 345KV CKT 1	704.8	0.1042	103.8184	FTTHOM1-LNX3345.00 - G16-017-TAP 345.00 345KV CKT 1
20SP	16ALL	0	TO->FROM	G17_109	BUFFALO - JAMESTOWN 345KV CKT 1	704.8	0.1042	103.8184	FT THOMPSON - FTTHOM1-LNX3345.00 345KV CKT Z
25SP	16ALL	0	TO->FROM	G17_109	BUFFALO - JAMESTOWN 345KV CKT 1	704.9	0.1042	108.7445	HURON (BD KU2A) 345/230/13.8KV TRANSFORMER CKT 1
25SP	16ALL	0	TO->FROM	G17_109	BUFFALO - JAMESTOWN 345KV CKT 1	704.9	0.1042	108.8438	ANTELOP-LNX3345.00 - ANTELOPE VALLEY 345KV CKT Z
25SP	16ALL	0	TO->FROM	G17_109	BUFFALO - JAMESTOWN 345KV CKT 1	704.9	0.1042	108.8722	P12:345:UMZB:# 103 #: BD IN SD. LOSS OF LINE
25SP	16ALL	0	TO->FROM	G17_109	BUFFALO - JAMESTOWN 345KV CKT 1	704.9	0.1042	108.8722	P12:345:UMZB:# 102 #: AVS BD IN ND. AVS BRD LR
20SP	16ALL	0	TO->FROM	G17_109	BUFFALO - JAMESTOWN 345KV CKT 1	704.8	0.10392	103.4642	HURON (BD KU2A) 345/230/13.8KV TRANSFORMER CKT 1
20SP	16ALL	0	TO->FROM	G17_109	BUFFALO - JAMESTOWN 345KV CKT 1	704.8	0.10392	103.4642	P13:345:UMZB:# 244 #: BD IN SD. LOSS OF TX
20SP	16ALL	0	TO->FROM	G17_109	BUFFALO - JAMESTOWN 345KV CKT 1	704.8	0.10392	103.4642	ANTELOP-LNX3345.00 - BRDLAND-LNX3345.00 345KV CKT 1
20SP	16ALL	0	TO->FROM	G17_109	BUFFALO - JAMESTOWN 345KV CKT 1	704.8	0.10392	103.4642	BRDLAND-LNX3345.00 - HURON 345KV CKT Z
20SP	16ALL	0	TO->FROM	G17_109	BUFFALO - JAMESTOWN 345KV CKT 1	704.8	0.10392	103.5636	ANTELOP-LNX3345.00 - ANTELOPE VALLEY 345KV CKT Z
20SP	16ALL	0	TO->FROM	G17_109	BUFFALO - JAMESTOWN 345KV CKT 1	704.8	0.10392	103.5919	P12:345:UMZB:# 103 #: BD IN SD. LOSS OF LINE
20SP	16ALL	0	TO->FROM	G17_109	BUFFALO - JAMESTOWN 345KV CKT 1	704.8	0.10392	103.5919	P12:345:UMZB:# 102 #: AVS BD IN ND. AVS BRD LR
17SP	16ALL	0	TO->FROM	G17_109	BUFFALO - JAMESTOWN 345KV CKT 1	704.7	0.10318	116.6397	FORBES - ROSEAU 500KV CKT 1
17SP	16ALL	0	TO->FROM	G17_109	BUFFALO - JAMESTOWN 345KV CKT 1	704.7	0.10318	117.108	ROSEAU - ROSEAUM 2 500.00 500KV CKT 1
17SP	16ALL	0	TO->FROM	G17_109	BUFFALO - JAMESTOWN 345KV CKT 1	704.7	0.10318	117.108	ROSEAU - ROSEAUM 2 500.00 500KV CKT 1
17SP	16ALL	0	TO->FROM	G17_109	BUFFALO - JAMESTOWN 345KV CKT 1	704.7	0.10318	117.5763	RIEL - ROSEAU 500KV CKT 1
17G	16ALL	0	TO->FROM	G17_109	BUFFALO - JAMESTOWN 345KV CKT 1	705	0.10201	107.4729	FORBES - ROSEAU 500KV CKT 1
17G	16ALL	0	TO->FROM	G17_109	BUFFALO - JAMESTOWN 345KV CKT 1	705	0.10201	107.785	ROSEAU - ROSEAUM 2 500.00 500KV CKT 1
17G	16ALL	0	TO->FROM	G17_109	BUFFALO - JAMESTOWN 345KV CKT 1	705	0.10201	107.785	ROSEAU - ROSEAUM 2 500.00 500KV CKT 1
17G	16ALL	0	TO->FROM	G17_109	BUFFALO - JAMESTOWN 345KV CKT 1	705	0.10201	108.097	RIEL - ROSEAU 500KV CKT 1
25SP	16ALL	0	TO->FROM	G17_109	BUFFALO - JAMESTOWN 345KV CKT 1	704.9	0.10186	108.833	FARGO - SHEYNNE 230KV CKT 1
17SP	16ALL	0	TO->FROM	G17_109	BUFFALO - JAMESTOWN 345KV CKT 1	704.7	0.10169	106.229	FORMAN - OAKES 230KV CKT 1
20SP	16ALL	0	TO->FROM	G17_109	BUFFALO - JAMESTOWN 345KV CKT 1	704.8	0.10164	103.7389	FARGO - SHEYNNE 230KV CKT 1
16WP	16ALL	0	TO->FROM	G17_109	BUFFALO - JAMESTOWN 345KV CKT 1	716.8	0.10154	102.9598	FORBES - ROSEAU 500KV CKT 1
16WP	16ALL	0	TO->FROM	G17_109	BUFFALO - JAMESTOWN 345KV CKT 1	716.8	0.10154	103.1272	ROSEAU - ROSEAUM 2 500.00 500KV CKT 1
16WP	16ALL	0	TO->FROM	G17_109	BUFFALO - JAMESTOWN 345KV CKT 1	716.8	0.10154	103.1272	ROSEAU - ROSEAUM 2 500.00 500KV CKT 1
16WP	16ALL	0	TO->FROM	G17_109	BUFFALO - JAMESTOWN 345KV CKT 1	716.8	0.10154	103.3086	RIEL - ROSEAU 500KV CKT 1
17SP	16ALL	0	TO->FROM	G17_109	BUFFALO - JAMESTOWN 345KV CKT 1	704.7	0.10099	103.7991	FORMAN - HANKINSON 230KV CKT 1
25SP	16ALL	0	TO->FROM	G17_109	BUFFALO - JAMESTOWN 345KV CKT 1	704.9	0.10097	120.3569	FORBES - ROSEAU 500KV CKT 1
25SP	16ALL	0	TO->FROM	G17_109	BUFFALO - JAMESTOWN 345KV CKT 1	704.9	0.10097	120.7683	ROSEAU - ROSEAUM 2 500.00 500KV CKT 1
25SP	16ALL	0	TO->FROM	G17_109	BUFFALO - JAMESTOWN 345KV CKT 1	704.9	0.10097	120.7683	ROSEAU - ROSEAUM 2 500.00 500KV CKT 1
25SP	16ALL	0	TO->FROM	G17_109	BUFFALO - JAMESTOWN 345KV CKT 1	704.9	0.10097	121.1656	RIEL - ROSEAU 500KV CKT 1
20SP	16ALL	0	TO->FROM	G17_109	BUFFALO - JAMESTOWN 345KV CKT 1	704.8	0.10087	116.2072	FORBES - ROSEAU 500KV CKT 1

SEASON	GROUP	SCENARIO	DIRECTION	SOURCE	MONITORED ELEMENT	RATE (MVA)	TDF	CONTINGENCY LOADING %	CONTINGENCY
20SP	16ALL	0	TO->FROM	G17_109	BUFFALO - JAMESTOWN 345KV CKT 1	704.8	0.10087	116.6612	ROSEAU - ROSEAUM 2 500.00 500KV CKT 1
20SP	16ALL	0	TO->FROM	G17_109	BUFFALO - JAMESTOWN 345KV CKT 1	704.8	0.10087	116.6612	ROSEAU - ROSEAUM 2 500.00 500KV CKT 1
20SP	16ALL	0	TO->FROM	G17_109	BUFFALO - JAMESTOWN 345KV CKT 1	704.8	0.10087	117.1152	RIEL - ROSEAU 500KV CKT 1
17SP	16ALL	0	TO->FROM	G17_109	BUFFALO - JAMESTOWN 345KV CKT 1	704.7	0.10043	104.9808	ELLENDALE - OAKES 230KV CKT 1
25SP	16ALL	0	TO->FROM	G17_109	BUFFALO - JAMESTOWN 345KV CKT 1	704.9	0.10028	108.5238	GLENBORO SOUTH - J290_SUB 230.00 230KV CKT 1
20WP	16ALL	0	TO->FROM	G17_109	BUFFALO - JAMESTOWN 345KV CKT 1	716.8	0.09885	101.5128	FORBES - ROSEAU 500KV CKT 1
20WP	16ALL	0	TO->FROM	G17_109	BUFFALO - JAMESTOWN 345KV CKT 1	716.8	0.09885	101.6802	ROSEAU - ROSEAUM 2 500.00 500KV CKT 1
20WP	16ALL	0	TO->FROM	G17_109	BUFFALO - JAMESTOWN 345KV CKT 1	716.8	0.09885	101.6802	ROSEAU - ROSEAUM 2 500.00 500KV CKT 1
20WP	16ALL	0	TO->FROM	G17_109	BUFFALO - JAMESTOWN 345KV CKT 1	716.8	0.09885	101.8477	RIEL - ROSEAU 500KV CKT 1
25SP	16ALL	0	TO->FROM	G17_109	BUFFALO - JAMESTOWN 345KV CKT 1	704.9	0.09363	103.7027	System Intact
25SP	16ALL	0	TO->FROM	G17_109	BUFFALO - JAMESTOWN 345KV CKT 1	704.9	0.0931	107.8054	HANKINSON - WAHPETON 230KV CKT 1
25SP	16ALL	0	TO->FROM	G17_109	BUFFALO - JAMESTOWN 345KV CKT 1	704.9	0.08163	108.5141	MANDAN 4 230.00 - MPC02100TAP4230.00 230KV CKT 1
17SP	00NR	0	TO->FROM	G17_109	BUFFALO - JAMESTOWN 345KV CKT 1	705	0.05001	108.4685	CNTSHNT3 345.00 - PRAIRIE3 345.00 345KV CKT 1
17SP	00NR	0	TO->FROM	G17_109	BUFFALO - JAMESTOWN 345KV CKT 1	705	0.05001	108.4685	CENTER - CNTSHNT3 345.00 345KV CKT Z1
25SP	00NR	0	TO->FROM	G17_109	BUFFALO - JAMESTOWN 345KV CKT 1	704.9	0.04938	113.1226	CNTSHNT3 345.00 - PRAIRIE3 345.00 345KV CKT 1
25SP	00NR	0	TO->FROM	G17_109	BUFFALO - JAMESTOWN 345KV CKT 1	704.9	0.04938	113.1226	CENTER - CNTSHNT3 345.00 345KV CKT Z1
20SP	00NR	0	TO->FROM	G17_109	BUFFALO - JAMESTOWN 345KV CKT 1	704.7	0.04928	109.3614	CNTSHNT3 345.00 - PRAIRIE3 345.00 345KV CKT 1
20SP	00NR	0	TO->FROM	G17_109	BUFFALO - JAMESTOWN 345KV CKT 1	704.7	0.04928	109.3614	CENTER - CNTSHNT3 345.00 345KV CKT Z1
25SP	00NR	0	TO->FROM	G17_109	BUFFALO - JAMESTOWN 345KV CKT 1	704.9	0.04883	102.4863	FTTHOM1-LNX3345.00 - G16-017-TAP 345.00 345KV CKT 1
25SP	00NR	0	TO->FROM	G17_109	BUFFALO - JAMESTOWN 345KV CKT 1	704.9	0.04883	102.4863	FT THOMPSON - FTTHOM1-LNX3345.00 345KV CKT Z
17SP	00NR	0	TO->FROM	G17_109	BUFFALO - JAMESTOWN 345KV CKT 1	705	0.04875	100.0709	GROTON-LNX3 345.00 - LELAND1-LNX3345.00 345KV CKT 1
17SP	00NR	0	TO->FROM	G17_109	BUFFALO - JAMESTOWN 345KV CKT 1	705	0.04875	100.0709	GROTON - GROTON-LNX3 345.00 345KV CKT Z
17SP	00NR	0	TO->FROM	G17_109	BUFFALO - JAMESTOWN 345KV CKT 1	705	0.04875	100.227	LELAND OLDS - LELAND1-LNX3345.00 345KV CKT Z
17SP	00NR	0	TO->FROM	G17_109	BUFFALO - JAMESTOWN 345KV CKT 1	705	0.04875	100.2411	P12:345:UMZB:# 109 #: LOS GRT IN ND. LOS GRT
25SP	00NR	0	TO->FROM	G17_109	BUFFALO - JAMESTOWN 345KV CKT 1	704.9	0.04807	102.3099	GROTON - GROTON-LNX3 345.00 345KV CKT Z
25SP	00NR	0	TO->FROM	G17_109	BUFFALO - JAMESTOWN 345KV CKT 1	704.9	0.04807	102.3099	GROTON-LNX3 345.00 - LELAND1-LNX3345.00 345KV CKT 1
25SP	00NR	0	TO->FROM	G17_109	BUFFALO - JAMESTOWN 345KV CKT 1	704.9	0.04807	102.395	LELAND OLDS - LELAND1-LNX3345.00 345KV CKT Z
25SP	00NR	0	TO->FROM	G17_109	BUFFALO - JAMESTOWN 345KV CKT 1	704.9	0.04807	102.4092	P12:345:UMZB:# 109 #: LOS GRT IN ND. LOS GRT
17G	16NR	0	TO->FROM	G17_109	BUFFALO - JAMESTOWN 345KV CKT 1	704.3	0.04717	107.9078	CNTSHNT3 345.00 - PRAIRIE3 345.00 345KV CKT 1
17G	16NR	0	TO->FROM	G17_109	BUFFALO - JAMESTOWN 345KV CKT 1	704.3	0.04717	107.9078	CENTER - CNTSHNT3 345.00 345KV CKT Z1
17SP	00NR	0	TO->FROM	G17_109	BUFFALO - JAMESTOWN 345KV CKT 1	705	0.04657	112.5252	FORBES - ROSEAU 500KV CKT 1
17SP	00NR	0	TO->FROM	G17_109	BUFFALO - JAMESTOWN 345KV CKT 1	705	0.04657	112.9649	ROSEAU - ROSEAUM 2 500.00 500KV CKT 1
17SP	00NR	0	TO->FROM	G17_109	BUFFALO - JAMESTOWN 345KV CKT 1	705	0.04657	112.9649	ROSEAU - ROSEAUM 2 500.00 500KV CKT 1
17SP	00NR	0	TO->FROM	G17_109	BUFFALO - JAMESTOWN 345KV CKT 1	705	0.04657	113.4046	RIEL - ROSEAU 500KV CKT 1
17SP	00NR	0	TO->FROM	G17_109	BUFFALO - JAMESTOWN 345KV CKT 1	705	0.04635	102.5719	FORMAN - OAKES 230KV CKT 1
17SP	00NR	0	TO->FROM	G17_109	BUFFALO - JAMESTOWN 345KV CKT 1	705	0.04628	100.3843	G09_001IST 345.00 - WATERTOWN 345KV CKT 1
20SP	00NR	0	TO->FROM	G17_109	BUFFALO - JAMESTOWN 345KV CKT 1	704.7	0.0458	112.9212	FORBES - ROSEAU 500KV CKT 1
20SP	00NR	0	TO->FROM	G17_109	BUFFALO - JAMESTOWN 345KV CKT 1	704.7	0.0458	113.3611	ROSEAU - ROSEAUM 2 500.00 500KV CKT 1
20SP	00NR	0	TO->FROM	G17_109	BUFFALO - JAMESTOWN 345KV CKT 1	704.7	0.0458	113.3611	ROSEAU - ROSEAUM 2 500.00 500KV CKT 1
20SP	00NR	0	TO->FROM	G17_109	BUFFALO - JAMESTOWN 345KV CKT 1	704.7	0.0458	113.801	RIEL - ROSEAU 500KV CKT 1
25SP	00NR	0	TO->FROM	G17_109	BUFFALO - JAMESTOWN 345KV CKT 1	704.9	0.0458	114.5064	FORBES - ROSEAU 500KV CKT 1
25SP	00NR	0	TO->FROM	G17_109	BUFFALO - JAMESTOWN 345KV CKT 1	704.9	0.0458	114.8895	ROSEAU - ROSEAUM 2 500.00 500KV CKT 1
25SP	00NR	0	TO->FROM	G17_109	BUFFALO - JAMESTOWN 345KV CKT 1	704.9	0.0458	114.8895	ROSEAU - ROSEAUM 2 500.00 500KV CKT 1
25SP	00NR	0	TO->FROM	G17_109	BUFFALO - JAMESTOWN 345KV CKT 1	704.9	0.0458	115.2725	RIEL - ROSEAU 500KV CKT 1
17SP	00NR	0	TO->FROM	G17_109	BUFFALO - JAMESTOWN 345KV CKT 1	705	0.04579	101.3692	ELLENDALE - OAKES 230KV CKT 1
17SP	00NR	0	TO->FROM	G17_109	BUFFALO - JAMESTOWN 345KV CKT 1	705	0.04569	100.542	FORMAN - HANKINSON 230KV CKT 1
17SP	00NR	0	TO->FROM	G17_109	BUFFALO - JAMESTOWN 345KV CKT 1	705	0.04554	100.0245	FARGO - SHEYNNE 230KV CKT 1
25SP	00NR	0	TO->FROM	G17_109	BUFFALO - JAMESTOWN 345KV CKT 1	704.9	0.04528	102.3109	G09_001IST 345.00 - WATERTOWN 345KV CKT 1
17G	16NR	0	TO->FROM	G17_109	BUFFALO - JAMESTOWN 345KV CKT 1	704.3	0.04527	100.0123	GROTON-LNX3 345.00 - LELAND1-LNX3345.00 345KV CKT 1
17G	16NR	0	TO->FROM	G17_109	BUFFALO - JAMESTOWN 345KV CKT 1	704.3	0.04527	100.0123	GROTON - GROTON-LNX3 345.00 345KV CKT Z
17G	16NR	0	TO->FROM	G17_109	BUFFALO - JAMESTOWN 345KV CKT 1	704.3	0.04527	100.2536	LELAND OLDS - LELAND1-LNX3345.00 345KV CKT Z
17G	16NR	0	TO->FROM	G17_109	BUFFALO - JAMESTOWN 345KV CKT 1	704.3	0.04527	100.282	P12:345:UMZB:# 109 #: LOS GRT IN ND. LOS GRT
25SP	00NR	0	TO->FROM	G17_109	BUFFALO - JAMESTOWN 345KV CKT 1	704.9	0.04516	104.1071	FARGO - SHEYNNE 230KV CKT 1
20SP	00NR	0	TO->FROM	G17_109	BUFFALO - JAMESTOWN 345KV CKT 1	704.7	0.04511	101.6085	FARGO - SHEYNNE 230KV CKT 1
25SP	00NR	0	TO->FROM	G17_109	BUFFALO - JAMESTOWN 345KV CKT 1	704.9	0.04488	102.7609	FARGO - JAMES TOWN 230KV CKT 1

SEASON	GROUP	SCENARIO	DIRECTION	SOURCE	MONITORED ELEMENT	RATE (MVA)	TDF	CONTINGENCY LOADING %	CONTINGENCY
25SP	00NR	0	TO->FROM	G17_109	BUFFALO - JAMESTOWN 345KV CKT 1	704.9	0.04484	102.1491	PRAIRIE - WINGER 230KV CKT 1
25SP	00NR	0	TO->FROM	G17_109	BUFFALO - JAMESTOWN 345KV CKT 1	704.9	0.04483	102.631	FARGO - JAMES TOWN 230KV CKT 2
17G	16NR	0	TO->FROM	G17_109	BUFFALO - JAMESTOWN 345KV CKT 1	704.3	0.04403	101.4042	FORMAN - OAKES 230KV CKT 1
17G	16NR	0	TO->FROM	G17_109	BUFFALO - JAMESTOWN 345KV CKT 1	704.3	0.04386	108.7513	FORBES - ROSEAU 500KV CKT 1
17G	16NR	0	TO->FROM	G17_109	BUFFALO - JAMESTOWN 345KV CKT 1	704.3	0.04386	109.0494	ROSEAU - ROSEAUM 2 500.00 500KV CKT 1
17G	16NR	0	TO->FROM	G17_109	BUFFALO - JAMESTOWN 345KV CKT 1	704.3	0.04386	109.0494	ROSEAU - ROSEAUM 2 500.00 500KV CKT 1
17G	16NR	0	TO->FROM	G17_109	BUFFALO - JAMESTOWN 345KV CKT 1	704.3	0.04386	109.3476	RIEL - ROSEAU 500KV CKT 1
25SP	00NR	0	TO->FROM	G17_109	BUFFALO - JAMESTOWN 345KV CKT 1	704.9	0.04351	102.1171	GRPRAR1-LNX3345.00 - HOLT.CO3 345.00 345KV CKT 1
25SP	00NR	0	TO->FROM	G17_109	BUFFALO - JAMESTOWN 345KV CKT 1	704.9	0.04351	102.1596	GRPRAR1-LNX3345.00 - YANKTON 345KV CKT Z
17G	16NR	0	TO->FROM	G17_109	BUFFALO - JAMESTOWN 345KV CKT 1	704.3	0.04345	100.2561	ELLENDALE - OAKES 230KV CKT 1
17SP	00NR	0	TO->FROM	G17_109	BUFFALO - JAMESTOWN 345KV CKT 1	705	0.04309	100.1261	HANKINSON - WAHPETON 230KV CKT 1
25SP	00NR	0	TO->FROM	G17_109	BUFFALO - JAMESTOWN 345KV CKT 1	704.9	0.04178	105.1028	HANKINSON - WAHPETON 230KV CKT 1
20SP	00NR	0	TO->FROM	G17_109	BUFFALO - JAMESTOWN 345KV CKT 1	704.7	0.04172	102.2067	HANKINSON - WAHPETON 230KV CKT 1
17SP	16ALL	0	FROM->TO	G17_109	BUFFALO (BUFFALO3) 345/115/41.6KV TRANSFORMER CKT 1	222.6	0.03101	114.0305	BISON 3 345.00 - BUFFALO 345KV CKT 1
17SP	16ALL	0	FROM->TO	G17_109	BUFFALO (BUFFALO3) 345/115/41.6KV TRANSFORMER CKT 1	222.5	0.03101	112.2391	BISON 3 345.00 - BUFFALO 345KV CKT 1
17G	16ALL	0	FROM->TO	G17_109	BUFFALO (BUFFALO3) 345/115/41.6KV TRANSFORMER CKT 1	222.6	0.03066	108.0809	BISON 3 345.00 - BUFFALO 345KV CKT 1
17G	16ALL	0	FROM->TO	G17_109	BUFFALO (BUFFALO3) 345/115/41.6KV TRANSFORMER CKT 1	222.5	0.03066	105.7924	BISON 3 345.00 - BUFFALO 345KV CKT 1
16WP	16ALL	0	FROM->TO	G17_109	BUFFALO (BUFFALO3) 345/115/41.6KV TRANSFORMER CKT 1	222.2	0.03053	112.396	BISON 3 345.00 - BUFFALO 345KV CKT 1
16WP	16ALL	0	FROM->TO	G17_109	BUFFALO (BUFFALO3) 345/115/41.6KV TRANSFORMER CKT 1	221.9	0.03053	109.3484	BISON 3 345.00 - BUFFALO 345KV CKT 1
25SP	16ALL	0	FROM->TO	G17_109	BUFFALO (BUFFALO3) 345/115/41.6KV TRANSFORMER CKT 1	222.1	0.03049	120.8825	BISON 3 345.00 - BUFFALO 345KV CKT 1
25SP	16ALL	0	FROM->TO	G17_109	BUFFALO (BUFFALO3) 345/115/41.6KV TRANSFORMER CKT 1	221.8	0.03049	118.9721	BISON 3 345.00 - BUFFALO 345KV CKT 1
20SP	16ALL	0	FROM->TO	G17_109	BUFFALO (BUFFALO3) 345/115/41.6KV TRANSFORMER CKT 1	222	0.03043	114.8414	BISON 3 345.00 - BUFFALO 345KV CKT 1
20SP	16ALL	0	FROM->TO	G17_109	BUFFALO (BUFFALO3) 345/115/41.6KV TRANSFORMER CKT 1	221.8	0.03043	113.0965	BISON 3 345.00 - BUFFALO 345KV CKT 1
20WP	16ALL	0	FROM->TO	G17_109	BUFFALO (BUFFALO3) 345/115/41.6KV TRANSFORMER CKT 1	222.1	0.02987	111.946	BISON 3 345.00 - BUFFALO 345KV CKT 1
20WP	16ALL	0	FROM->TO	G17_109	BUFFALO (BUFFALO3) 345/115/41.6KV TRANSFORMER CKT 1	221.8	0.02987	108.761	BISON 3 345.00 - BUFFALO 345KV CKT 1
17SP	16ALL	0	FROM->TO	G17_109	CIRCLE - DAWSON CREEK 115KV CKT 1	77.7	0.04378	101.6062	CULBERTSN E7115.00 - WILISTON 115KV CKT 1
17G	16ALL	0	FROM->TO	G17_109	CIRCLE - DAWSON CREEK 115KV CKT 1	78.7	0.04334	104.2846	CULBERTSN E7115.00 - WILISTON 115KV CKT 1
25SP	16ALL	0	TO->FROM	G17_109	CIRCLE - G12_012IST 115.00 115KV CKT 1	77.2	0.04387	118.4974	CULBERTSN E7115.00 - WILISTON 115KV CKT 1
20SP	16ALL	0	TO->FROM	G17_109	CIRCLE - G12_012IST 115.00 115KV CKT 1	77.5	0.04382	119.0452	CULBERTSN E7115.00 - WILISTON 115KV CKT 1
17SP	16ALL	0	TO->FROM	G17_109	CIRCLE - G12_012IST 115.00 115KV CKT 1	77.2	0.04378	120.9171	CULBERTSN E7115.00 - WILISTON 115KV CKT 1
20WP	16ALL	0	TO->FROM	G17_109	CIRCLE - G12_012IST 115.00 115KV CKT 1	86.9	0.04356	115.3694	CULBERTSN E7115.00 - WILISTON 115KV CKT 1
16WP	16ALL	0	TO->FROM	G17_109	CIRCLE - G12_012IST 115.00 115KV CKT 1	86.5	0.04351	108.2497	CULBERTSN E7115.00 - WILISTON 115KV CKT 1
17G	16ALL	0	TO->FROM	G17_109	CIRCLE - G12_012IST 115.00 115KV CKT 1	76.7	0.04334	127.9948	CULBERTSN E7115.00 - WILISTON 115KV CKT 1
20L	16ALL	0	TO->FROM	G17_109	CIRCLE - G12_012IST 115.00 115KV CKT 1	77.3	0.04278	114.0285	CULBERTSN E7115.00 - WILISTON 115KV CKT 1
20SP	16ALL	0	FROM->TO	G17_109	CULBERTSN E7115.00 - WILISTON 115KV CKT 1	126.6	0.18985	100.6951	BELFIELD - MEDORA 230KV CKT 1
20SP	16ALL	0	FROM->TO	G17_109	CULBERTSN E7115.00 - WILISTON 115KV CKT 1	126.6	0.18985	102.5118	BEAVERHILL4 230.00 - MEDORA 230KV CKT 1
20WP	16ALL	0	FROM->TO	G17_109	CULBERTSN E7115.00 - WILISTON 115KV CKT 1	128.8	0.18955	105.1708	BEAVERHILL4 230.00 - DAWSON CREEK 230KV CKT 1
20WP	16ALL	0	FROM->TO	G17_109	CULBERTSN E7115.00 - WILISTON 115KV CKT 1	128.8	0.18955	113.0901	BELFIELD - MEDORA 230KV CKT 1
20WP	16ALL	0	FROM->TO	G17_109	CULBERTSN E7115.00 - WILISTON 115KV CKT 1	128.8	0.18955	115.264	BEAVERHILL4 230.00 - MEDORA 230KV CKT 1
17SP	16ALL	0	FROM->TO	G17_109	CULBERTSN E7115.00 - WILISTON 115KV CKT 1	126	0.18953	109.4984	BEAVERHILL4 230.00 - DAWSON CREEK 230KV CKT 1
17SP	16ALL	0	FROM->TO	G17_109	CULBERTSN E7115.00 - WILISTON 115KV CKT 1	126	0.18953	118.546	BELFIELD - MEDORA 230KV CKT 1
17SP	16ALL	0	FROM->TO	G17_109	CULBERTSN E7115.00 - WILISTON 115KV CKT 1	126	0.18953	120.3714	BEAVERHILL4 230.00 - MEDORA 230KV CKT 1
16WP	16ALL	0	FROM->TO	G17_109	CULBERTSN E7115.00 - WILISTON 115KV CKT 1	129	0.18913	108.8403	BEAVERHILL4 230.00 - DAWSON CREEK 230KV CKT 1
16WP	16ALL	0	FROM->TO	G17_109	CULBERTSN E7115.00 - WILISTON 115KV CKT 1	129	0.18913	117.2124	BELFIELD - MEDORA 230KV CKT 1
16WP	16ALL	0	FROM->TO	G17_109	CULBERTSN E7115.00 - WILISTON 115KV CKT 1	129	0.18913	119.3054	BEAVERHILL4 230.00 - MEDORA 230KV CKT 1
17G	16ALL	0	FROM->TO	G17_109	CULBERTSN E7115.00 - WILISTON 115KV CKT 1	127	0.18879	114.463	BEAVERHILL4 230.00 - DAWSON CREEK 230KV CKT 1
17G	16ALL	0	FROM->TO	G17_109	CULBERTSN E7115.00 - WILISTON 115KV CKT 1	127	0.18879	123.7543	BELFIELD - MEDORA 230KV CKT 1
17G	16ALL	0	FROM->TO	G17_109	CULBERTSN E7115.00 - WILISTON 115KV CKT 1	127	0.18879	125.4866	BEAVERHILL4 230.00 - MEDORA 230KV CKT 1
20L	16ALL	0	FROM->TO	G17_109	CULBERTSN E7115.00 - WILISTON 115KV CKT 1	125.8	0.18778	104.4928	BELFIELD - MEDORA 230KV CKT 1
20L	16ALL	0	FROM->TO	G17_109	CULBERTSN E7115.00 - WILISTON 115KV CKT 1	125.8	0.18778	105.6057	BEAVERHILL4 230.00 - MEDORA 230KV CKT 1
17SP	16ALL	0	FROM->TO	G17_109	CULBERTSN E7115.00 - WILISTON 115KV CKT 1	126	0.14489	105.3333	BELFIELD - CHARLIE CREEK 345KV CKT 1
20WP	16ALL	0	FROM->TO	G17_109	CULBERTSN E7115.00 - WILISTON 115KV CKT 1	128.8	0.14484	104.5031	BELFIELD - CHARLIE CREEK 345KV CKT 1
16WP	16ALL	0	FROM->TO	G17_109	CULBERTSN E7115.00 - WILISTON 115KV CKT 1	129	0.14458	107.9039	BELFIELD - CHARLIE CREEK 345KV CKT 1
17G	16ALL	0	FROM->TO	G17_109	CULBERTSN E7115.00 - WILISTON 115KV CKT 1	127	0.14424	115.2441	BELFIELD - CHARLIE CREEK 345KV CKT 1
17SP	16ALL	0	FROM->TO	G17_109	CULBERTSN E7115.00 - WILISTON 115KV CKT 1	126	0.14265	103.1587	BAKER - LTLMISS 230KV CKT 1

SEASON	GROUP	SCENARIO	DIRECTION	SOURCE	MONITORED ELEMENT	RATE (MVA)	TDF	CONTINGENCY LOADING %	CONTINGENCY
20WP	16ALL	0	FROM->TO	G17_109	CULBERTSN E7115.00 - WILISTON 115KV CKT 1	128.8	0.13802	107.0652	DAWSON CREEK - LEWIS & CLARK 115KV CKT 1
20WP	16ALL	0	FROM->TO	G17_109	CULBERTSN E7115.00 - WILISTON 115KV CKT 1	128.8	0.13802	109.1615	LEWIS & CLARK - RICHLAND 115KV CKT 1
17SP	16ALL	0	FROM->TO	G17_109	CULBERTSN E7115.00 - WILISTON 115KV CKT 1	126	0.13793	107.2857	DAWSON CREEK - LEWIS & CLARK 115KV CKT 1
17SP	16ALL	0	FROM->TO	G17_109	CULBERTSN E7115.00 - WILISTON 115KV CKT 1	126	0.13793	109.746	LEWIS & CLARK - RICHLAND 115KV CKT 1
16WP	16ALL	0	FROM->TO	G17_109	CULBERTSN E7115.00 - WILISTON 115KV CKT 1	129	0.13758	108.6326	DAWSON CREEK - LEWIS & CLARK 115KV CKT 1
16WP	16ALL	0	FROM->TO	G17_109	CULBERTSN E7115.00 - WILISTON 115KV CKT 1	129	0.13758	110.7256	LEWIS & CLARK - RICHLAND 115KV CKT 1
17G	16ALL	0	FROM->TO	G17_109	CULBERTSN E7115.00 - WILISTON 115KV CKT 1	127	0.13722	113.3008	LEWIS & CLARK - RICHLAND 115KV CKT 1
17G	16ALL	0	FROM->TO	G17_109	CULBERTSN E7115.00 - WILISTON 115KV CKT 1	127	0.13722	116.2929	DAWSON CREEK - LEWIS & CLARK 115KV CKT 1
17SP	16ALL	0	FROM->TO	G17_109	CULBERTSN E7115.00 - WILISTON 115KV CKT 1	126	0.12489	101.8317	FAIRVIEW - RICHLAND 115KV CKT 1
16WP	16ALL	0	FROM->TO	G17_109	CULBERTSN E7115.00 - WILISTON 115KV CKT 1	129	0.12454	103.076	FAIRVIEW - RICHLAND 115KV CKT 1
20WP	16ALL	0	FROM->TO	G17_109	CULBERTSN E7115.00 - WILISTON 115KV CKT 1	128.8	0.12292	104.1646	DAWSON CREEK - MILES CITY EAST 230KV CKT 1
17SP	16ALL	0	FROM->TO	G17_109	CULBERTSN E7115.00 - WILISTON 115KV CKT 1	126	0.12289	104.8921	DAWSON CREEK - MILES CITY EAST 230KV CKT 1
16WP	16ALL	0	FROM->TO	G17_109	CULBERTSN E7115.00 - WILISTON 115KV CKT 1	129	0.12254	104.3597	DAWSON CREEK - MILES CITY EAST 230KV CKT 1
17G	16ALL	0	FROM->TO	G17_109	CULBERTSN E7115.00 - WILISTON 115KV CKT 1	127	0.12221	109.8362	DAWSON CREEK - MILES CITY EAST 230KV CKT 1
17SP	16ALL	0	FROM->TO	G17_109	CULBERTSN E7115.00 - WILISTON 115KV CKT 1	126	0.12126	102.4921	BOWMAN - RHAME 4 230.00 230KV CKT 1
17SP	16ALL	0	FROM->TO	G17_109	CULBERTSN E7115.00 - WILISTON 115KV CKT 1	126	0.12049	104.9143	BISON - MAURINE 230KV CKT 1
17SP	16ALL	0	FROM->TO	G17_109	CULBERTSN E7115.00 - WILISTON 115KV CKT 1	126	0.12049	105.3111	BISON - HETINGER 230KV CKT 1
20WP	16ALL	0	FROM->TO	G17_109	CULBERTSN E7115.00 - WILISTON 115KV CKT 1	128.8	0.12041	101.9876	BISON - MAURINE 230KV CKT 1
20WP	16ALL	0	FROM->TO	G17_109	CULBERTSN E7115.00 - WILISTON 115KV CKT 1	128.8	0.12041	103.0745	BISON - HETINGER 230KV CKT 1
16WP	16ALL	0	FROM->TO	G17_109	CULBERTSN E7115.00 - WILISTON 115KV CKT 1	129	0.12013	103.0636	BISON - MAURINE 230KV CKT 1
16WP	16ALL	0	FROM->TO	G17_109	CULBERTSN E7115.00 - WILISTON 115KV CKT 1	129	0.12013	103.5287	BISON - HETINGER 230KV CKT 1
17G	16ALL	0	FROM->TO	G17_109	CULBERTSN E7115.00 - WILISTON 115KV CKT 1	127	0.11978	110.4032	BISON - MAURINE 230KV CKT 1
17G	16ALL	0	FROM->TO	G17_109	CULBERTSN E7115.00 - WILISTON 115KV CKT 1	127	0.11978	110.7181	BISON - HETINGER 230KV CKT 1
20WP	16ALL	0	FROM->TO	G17_109	CULBERTSN E7115.00 - WILISTON 115KV CKT 1	128.8	0.11866	104.1211	BELFIELD - DAGLUM 4230.00 230KV CKT 1
17SP	16ALL	0	FROM->TO	G17_109	CULBERTSN E7115.00 - WILISTON 115KV CKT 1	126	0.11853	103.8667	BELFIELD - DAGLUM 4230.00 230KV CKT 1
16WP	16ALL	0	FROM->TO	G17_109	CULBERTSN E7115.00 - WILISTON 115KV CKT 1	129	0.1182	104.8372	BELFIELD - DAGLUM 4230.00 230KV CKT 1
17G	16ALL	0	FROM->TO	G17_109	CULBERTSN E7115.00 - WILISTON 115KV CKT 1	127	0.11789	111.4299	BELFIELD - DAGLUM 4230.00 230KV CKT 1
20SP	16ALL	0	FROM->TO	G17_109	CULBERTSN E7115.00 - WILISTON 115KV CKT 1	126.6	0.11452	100.0664	CIRCLE - G12_012IST 115.00 115KV CKT 1
17SP	16ALL	0	FROM->TO	G17_109	CULBERTSN E7115.00 - WILISTON 115KV CKT 1	126	0.11427	107.6921	CIRCLE - DAWSON CREEK 115KV CKT 1
17SP	16ALL	0	FROM->TO	G17_109	CULBERTSN E7115.00 - WILISTON 115KV CKT 1	126	0.11427	111.9778	CIRCLE - G12_012IST 115.00 115KV CKT 1
20WP	16ALL	0	FROM->TO	G17_109	CULBERTSN E7115.00 - WILISTON 115KV CKT 1	128.8	0.11424	113.5621	CIRCLE - G12_012IST 115.00 115KV CKT 1
20WP	16ALL	0	FROM->TO	G17_109	CULBERTSN E7115.00 - WILISTON 115KV CKT 1	128.8	0.11415	102.4565	FT PECK - KPS10-FP7 115.00 115KV CKT 1
20WP	16ALL	0	FROM->TO	G17_109	CULBERTSN E7115.00 - WILISTON 115KV CKT 1	128.8	0.11415	102.4565	KPS10-FP7 115.00 115/6.9KV TRANSFORMER CKT 1
20WP	16ALL	0	FROM->TO	G17_109	CULBERTSN E7115.00 - WILISTON 115KV CKT 1	128.8	0.11415	102.8261	PIONEER GEN7115.00 - STATELINEMW7115.00 115KV CKT Z
20WP	16ALL	0	FROM->TO	G17_109	CULBERTSN E7115.00 - WILISTON 115KV CKT 1	128.8	0.11415	103.4658	G15046_1 345.00 - TANDE 3345.00 345KV CKT 1
17SP	16ALL	0	FROM->TO	G17_109	CULBERTSN E7115.00 - WILISTON 115KV CKT 1	126	0.11409	103.454	G15046_1 345.00 - TANDE 3345.00 345KV CKT 1
16WP	16ALL	0	FROM->TO	G17_109	CULBERTSN E7115.00 - WILISTON 115KV CKT 1	129	0.11388	105.6093	CIRCLE - DAWSON CREEK 115KV CKT 1
16WP	16ALL	0	FROM->TO	G17_109	CULBERTSN E7115.00 - WILISTON 115KV CKT 1	129	0.11388	111.6558	CIRCLE - G12_012IST 115.00 115KV CKT 1
16WP	16ALL	0	FROM->TO	G17_109	CULBERTSN E7115.00 - WILISTON 115KV CKT 1	129	0.11376	103.5783	G15046_1 345.00 - TANDE 3345.00 345KV CKT 1
17G	16ALL	0	FROM->TO	G17_109	CULBERTSN E7115.00 - WILISTON 115KV CKT 1	127	0.11354	113.937	CIRCLE - DAWSON CREEK 115KV CKT 1
17G	16ALL	0	FROM->TO	G17_109	CULBERTSN E7115.00 - WILISTON 115KV CKT 1	127	0.11354	118.8189	CIRCLE - G12_012IST 115.00 115KV CKT 1
17G	16ALL	0	FROM->TO	G17_109	CULBERTSN E7115.00 - WILISTON 115KV CKT 1	127	0.11343	107.8646	NESET 7 115.00 115/34.5KV TRANSFORMER CKT 1
17G	16ALL	0	FROM->TO	G17_109	CULBERTSN E7115.00 - WILISTON 115KV CKT 1	127	0.11343	109.9118	G15046_1 345.00 - TANDE 3345.00 345KV CKT 1
20L	16ALL	0	FROM->TO	G17_109	CULBERTSN E7115.00 - WILISTON 115KV CKT 1	125.8	0.1127	101.5548	CIRCLE - G12_012IST 115.00 115KV CKT 1
20WP	16ALL	0	FROM->TO	G17_109	CULBERTSN E7115.00 - WILISTON 115KV CKT 1	128.8	0.11233	106.1242	CHARLIE CREEK - PATENTGATE 3345.00 345KV CKT 1
20WP	16ALL	0	FROM->TO	G17_109	CULBERTSN E7115.00 - WILISTON 115KV CKT 1	128.8	0.11229	103.0155	CHAR.CK4 230.00 - WATFORD 230KV CKT 1
17SP	16ALL	0	FROM->TO	G17_109	CULBERTSN E7115.00 - WILISTON 115KV CKT 1	126	0.11212	106.2127	CHAR.CK4 230.00 - WATFORD 230KV CKT 1
16WP	16ALL	0	FROM->TO	G17_109	CULBERTSN E7115.00 - WILISTON 115KV CKT 1	129	0.11177	102.3132	JUDSON 4230.00 - WILLISTON 230KV CKT 1
16WP	16ALL	0	FROM->TO	G17_109	CULBERTSN E7115.00 - WILISTON 115KV CKT 1	129	0.11177	102.3132	JUDSON 3345.00 (JUDSON KU1A) 345/230/13.8KV TRANSFORMER CKT 1
16WP	16ALL	0	FROM->TO	G17_109	CULBERTSN E7115.00 - WILISTON 115KV CKT 1	129	0.11177	107.5101	CHAR.CK4 230.00 - WATFORD 230KV CKT 1
17G	16ALL	0	FROM->TO	G17_109	CULBERTSN E7115.00 - WILISTON 115KV CKT 1	127	0.11141	108.6961	JUDSON 4230.00 - WILLISTON 230KV CKT 1
17G	16ALL	0	FROM->TO	G17_109	CULBERTSN E7115.00 - WILISTON 115KV CKT 1	127	0.11141	108.6961	JUDSON 3345.00 (JUDSON KU1A) 345/230/13.8KV TRANSFORMER CKT 1
17G	16ALL	0	FROM->TO	G17_109	CULBERTSN E7115.00 - WILISTON 115KV CKT 1	127	0.11135	114.2677	CHAR.CK4 230.00 - WATFORD 230KV CKT 1
20SP	16ALL	0	FROM->TO	G17_109	CULBERTSN E7115.00 - WILISTON 115KV CKT 1	126.6	0.05478	102.0347	COALHILL4 230.00 - FT PECK 230KV CKT 1
17SP	16ALL	0	FROM->TO	G17_109	CULBERTSN E7115.00 - WILISTON 115KV CKT 1	126	0.05454	118.4794	COALHILL4 230.00 - G17109_T(P) 230.00 230KV CKT 1

SEASON	GROUP	SCENARIO	DIRECTION	SOURCE	MONITORED ELEMENT	RATE (MVA)	TDF	CONTINGENCY LOADING %	CONTINGENCY
17SP	16ALL	0	FROM->TO	G17_109	CULBERTSN E7115.00 - WILISTON 115KV CKT 1	126	0.05454	118.4794	COALHILL4 230.00 - FT PECK 230KV CKT 1
20WP	16ALL	0	FROM->TO	G17_109	CULBERTSN E7115.00 - WILISTON 115KV CKT 1	128.8	0.05413	103.6615	COALHILL4 230.00 - G17109_T(P) 230.00 230KV CKT 1
20WP	16ALL	0	FROM->TO	G17_109	CULBERTSN E7115.00 - WILISTON 115KV CKT 1	128.8	0.05413	111.4255	COALHILL4 230.00 - FT PECK 230KV CKT 1
16WP	16ALL	0	FROM->TO	G17_109	CULBERTSN E7115.00 - WILISTON 115KV CKT 1	129	0.05377	113.5473	COALHILL4 230.00 - G17109_T(P) 230.00 230KV CKT 1
16WP	16ALL	0	FROM->TO	G17_109	CULBERTSN E7115.00 - WILISTON 115KV CKT 1	129	0.05377	113.5473	COALHILL4 230.00 - FT PECK 230KV CKT 1
17G	16ALL	0	FROM->TO	G17_109	CULBERTSN E7115.00 - WILISTON 115KV CKT 1	127	0.05322	121.8583	COALHILL4 230.00 - G17109_T(P) 230.00 230KV CKT 1
17G	16ALL	0	FROM->TO	G17_109	CULBERTSN E7115.00 - WILISTON 115KV CKT 1	127	0.05322	121.8583	COALHILL4 230.00 - FT PECK 230KV CKT 1
17SP	16ALL	0	FROM->TO	G17_109	DAWSON CREEK - FALLON 115KV CKT 1	87.7	0.08248	115.4618	DAWSON CREEK - MILES CITY EAST 230KV CKT 1
16WP	16ALL	0	FROM->TO	G17_109	DAWSON CREEK - FALLON 115KV CKT 1	87.9	0.08235	107.6314	DAWSON CREEK - MILES CITY EAST 230KV CKT 1
25SP	16ALL	0	FROM->TO	G17_109	DAWSON CREEK - FALLON 115KV CKT 1	88	0.08232	134.6682	DAWSON CREEK - MILES CITY EAST 230KV CKT 1
20SP	16ALL	0	FROM->TO	G17_109	DAWSON CREEK - FALLON 115KV CKT 1	87.9	0.08226	125.3561	DAWSON CREEK - MILES CITY EAST 230KV CKT 1
20WP	16ALL	0	FROM->TO	G17_109	DAWSON CREEK - FALLON 115KV CKT 1	88	0.08211	110.0318	DAWSON CREEK - MILES CITY EAST 230KV CKT 1
20L	16ALL	0	FROM->TO	G17_109	DAWSON CREEK - FALLON 115KV CKT 1	87.7	0.0817	103.1517	DAWSON CREEK - MILES CITY EAST 230KV CKT 1
17SP	16ALL	0	FROM->TO	G17_109	DAWSON CREEK - LEWIS & CLARK 115KV CKT 1	101	0.17119	100.9465	CULBERTSN E7115.00 - WILISTON 115KV CKT 1
17G	16ALL	0	FROM->TO	G17_109	DAWSON CREEK - LEWIS & CLARK 115KV CKT 1	100.9	0.17077	104.3449	CULBERTSON - POPLAR 115KV CKT 1
17G	16ALL	0	FROM->TO	G17_109	DAWSON CREEK - LEWIS & CLARK 115KV CKT 1	100.9	0.17077	106.9217	POPLAR - WOLF POINT 115KV CKT 1
17G	16ALL	0	FROM->TO	G17_109	DAWSON CREEK - LEWIS & CLARK 115KV CKT 1	100.9	0.1707	122.8503	CULBERTSN E7115.00 - WILISTON 115KV CKT 1
17G	16ALL	0	FROM->TO	G17_109	DAWSON CREEK - LEWIS & CLARK 115KV CKT 1	100.9	0.15236	101.887	BISON - MAURINE 230KV CKT 1
17G	16ALL	0	FROM->TO	G17_109	DAWSON CREEK - LEWIS & CLARK 115KV CKT 1	100.9	0.15236	102.779	BISON - HETINGER 230KV CKT 1
17G	16ALL	0	FROM->TO	G17_109	DAWSON CREEK - LEWIS & CLARK 115KV CKT 1	100.9	0.14976	105.7364	BELFIELD - DAGLUM 4230.00 230KV CKT 1
17G	16ALL	0	FROM->TO	G17_109	DAWSON CREEK - LEWIS & CLARK 115KV CKT 1	100.9	0.13637	108.4202	CHARLIE CREEK (CCR KV2A) 345/115/13.8KV TRANSFORMER CKT 1
17SP	16ALL	0	FROM->TO	G17_109	DICKINSON (KW1A 100) 230/115/13.8KV TRANSFORMER CKT 1	125	0.10009	105.9232	BELFIELD - CHARLIE CREEK 345KV CKT 1
17SP	16ALL	0	FROM->TO	G17_109	DICKINSON (KW1A 100) 230/115/13.8KV TRANSFORMER CKT 1	124.7	0.10009	106.4186	BELFIELD - CHARLIE CREEK 345KV CKT 1
16WP	16ALL	0	FROM->TO	G17_109	DICKINSON (KW1A 100) 230/115/13.8KV TRANSFORMER CKT 1	125	0.1	112.3712	BELFIELD - CHARLIE CREEK 345KV CKT 1
16WP	16ALL	0	FROM->TO	G17_109	DICKINSON (KW1A 100) 230/115/13.8KV TRANSFORMER CKT 1	124.4	0.1	113.074	BELFIELD - CHARLIE CREEK 345KV CKT 1
17SP	16ALL	0	FROM->TO	G17_109	DICKINSON (KW1A 100) 230/115/13.8KV TRANSFORMER CKT 1	125	0.09986	118.6144	BOWMAN - HETINGER 230KV CKT 1
17SP	16ALL	0	FROM->TO	G17_109	DICKINSON (KW1A 100) 230/115/13.8KV TRANSFORMER CKT 1	125	0.09986	129.4144	BOWMAN - RHAME 4 230.00 230KV CKT 1
17SP	16ALL	0	FROM->TO	G17_109	DICKINSON (KW1A 100) 230/115/13.8KV TRANSFORMER CKT 1	124.7	0.09986	119.1403	BOWMAN - HETINGER 230KV CKT 1
17SP	16ALL	0	FROM->TO	G17_109	DICKINSON (KW1A 100) 230/115/13.8KV TRANSFORMER CKT 1	124.7	0.09986	129.9663	BOWMAN - RHAME 4 230.00 230KV CKT 1
20SP	16ALL	0	FROM->TO	G17_109	DICKINSON (KW1A 100) 230/115/13.8KV TRANSFORMER CKT 1	124.9	0.09984	100.7398	BELFIELD - CHARLIE CREEK 345KV CKT 1
20WP	16ALL	0	FROM->TO	G17_109	DICKINSON (KW1A 100) 230/115/13.8KV TRANSFORMER CKT 1	124.9	0.09972	105.1081	BELFIELD - CHARLIE CREEK 345KV CKT 1
20WP	16ALL	0	FROM->TO	G17_109	DICKINSON (KW1A 100) 230/115/13.8KV TRANSFORMER CKT 1	124.9	0.09972	105.2682	BELFIELD - CHARLIE CREEK 345KV CKT 1
16WP	16ALL	0	FROM->TO	G17_109	DICKINSON (KW1A 100) 230/115/13.8KV TRANSFORMER CKT 1	125	0.09957	107.7984	BOWMAN - HETINGER 230KV CKT 1
16WP	16ALL	0	FROM->TO	G17_109	DICKINSON (KW1A 100) 230/115/13.8KV TRANSFORMER CKT 1	125	0.09957	119.1584	BOWMAN - RHAME 4 230.00 230KV CKT 1
16WP	16ALL	0	FROM->TO	G17_109	DICKINSON (KW1A 100) 230/115/13.8KV TRANSFORMER CKT 1	124.4	0.09957	108.5595	BOWMAN - HETINGER 230KV CKT 1
16WP	16ALL	0	FROM->TO	G17_109	DICKINSON (KW1A 100) 230/115/13.8KV TRANSFORMER CKT 1	124.4	0.09957	119.9743	BOWMAN - RHAME 4 230.00 230KV CKT 1
17G	16ALL	0	FROM->TO	G17_109	DICKINSON (KW1A 100) 230/115/13.8KV TRANSFORMER CKT 1	125	0.09943	107.92	BOWMAN - RHAME 4 230.00 230KV CKT 1
17G	16ALL	0	FROM->TO	G17_109	DICKINSON (KW1A 100) 230/115/13.8KV TRANSFORMER CKT 1	124.9	0.09943	108.0865	BOWMAN - RHAME 4 230.00 230KV CKT 1
25SP	16ALL	0	FROM->TO	G17_109	DICKINSON (KW1A 100) 230/115/13.8KV TRANSFORMER CKT 1	125	0.09839	126.8	BOWMAN - HETINGER 230KV CKT 1
25SP	16ALL	0	FROM->TO	G17_109	DICKINSON (KW1A 100) 230/115/13.8KV TRANSFORMER CKT 1	125	0.09839	144	BOWMAN - RHAME 4 230.00 230KV CKT 1
25SP	16ALL	0	FROM->TO	G17_109	DICKINSON (KW1A 100) 230/115/13.8KV TRANSFORMER CKT 1	124.6	0.09839	127.4478	BOWMAN - HETINGER 230KV CKT 1
25SP	16ALL	0	FROM->TO	G17_109	DICKINSON (KW1A 100) 230/115/13.8KV TRANSFORMER CKT 1	124.6	0.09839	144.7833	BOWMAN - RHAME 4 230.00 230KV CKT 1
20SP	16ALL	0	FROM->TO	G17_109	DICKINSON (KW1A 100) 230/115/13.8KV TRANSFORMER CKT 1	124.9	0.09831	117.2682	BOWMAN - HETINGER 230KV CKT 1
20SP	16ALL	0	FROM->TO	G17_109	DICKINSON (KW1A 100) 230/115/13.8KV TRANSFORMER CKT 1	124.9	0.09831	133.7614	BOWMAN - RHAME 4 230.00 230KV CKT 1
20SP	16ALL	0	FROM->TO	G17_109	DICKINSON (KW1A 100) 230/115/13.8KV TRANSFORMER CKT 1	124.3	0.09831	118.0756	BOWMAN - HETINGER 230KV CKT 1
20SP	16ALL	0	FROM->TO	G17_109	DICKINSON (KW1A 100) 230/115/13.8KV TRANSFORMER CKT 1	124.3	0.09831	134.6484	BOWMAN - RHAME 4 230.00 230KV CKT 1
20WP	16ALL	0	FROM->TO	G17_109	DICKINSON (KW1A 100) 230/115/13.8KV TRANSFORMER CKT 1	124.9	0.09794	102.0977	BOWMAN - HETINGER 230KV CKT 1
20WP	16ALL	0	FROM->TO	G17_109	DICKINSON (KW1A 100) 230/115/13.8KV TRANSFORMER CKT 1	124.9	0.09794	102.3379	BOWMAN - HETINGER 230KV CKT 1
20WP	16ALL	0	FROM->TO	G17_109	DICKINSON (KW1A 100) 230/115/13.8KV TRANSFORMER CKT 1	124.9	0.09794	119.2314	BOWMAN - RHAME 4 230.00 230KV CKT 1
20WP	16ALL	0	FROM->TO	G17_109	DICKINSON (KW1A 100) 230/115/13.8KV TRANSFORMER CKT 1	124.9	0.09794	119.4716	BOWMAN - RHAME 4 230.00 230KV CKT 1
20L	16ALL	0	FROM->TO	G17_109	DICKINSON (KW1A 100) 230/115/13.8KV TRANSFORMER CKT 1	125	0.09743	100.096	BOWMAN - HETINGER 230KV CKT 1
20L	16ALL	0	FROM->TO	G17_109	DICKINSON (KW1A 100) 230/115/13.8KV TRANSFORMER CKT 1	125	0.09743	111.296	BOWMAN - RHAME 4 230.00 230KV CKT 1
20L	16ALL	0	FROM->TO	G17_109	DICKINSON (KW1A 100) 230/115/13.8KV TRANSFORMER CKT 1	125	0.09743	111.376	BOWMAN - RHAME 4 230.00 230KV CKT 1
17SP	16ALL	0	FROM->TO	G17_109	DICKINSON (KW1A 100) 230/115/13.8KV TRANSFORMER CKT 1	125	0.07287	105.136	DICKINSON - HEBRON 4 230.00 230KV CKT 1
17SP	16ALL	0	FROM->TO	G17_109	DICKINSON (KW1A 100) 230/115/13.8KV TRANSFORMER CKT 1	125	0.07287	120.576	HEBRON 4 230.00 - MANDAN 4 230.00 230KV CKT 1

SEASON	GROUP	SCENARIO	DIRECTION	SOURCE	MONITORED ELEMENT	RATE (MVA)	TDF	CONTINGENCY LOADING %	CONTINGENCY
17SP	16ALL	0	FROM->TO	G17_109	DICKINSON (KW1A 100) 230/115/13.8KV TRANSFORMER CKT 1	124.7	0.07287	105.6295	DICKINSON - HEBRON 4 230.00 230KV CKT 1
17SP	16ALL	0	FROM->TO	G17_109	DICKINSON (KW1A 100) 230/115/13.8KV TRANSFORMER CKT 1	124.7	0.07287	121.1067	HEBRON 4 230.00 - MANDAN 4 230.00 230KV CKT 1
17G	16ALL	0	FROM->TO	G17_109	DICKINSON (KW1A 100) 230/115/13.8KV TRANSFORMER CKT 1	125	0.07273	104.2944	HEBRON 4 230.00 - MANDAN 4 230.00 230KV CKT 1
17G	16ALL	0	FROM->TO	G17_109	DICKINSON (KW1A 100) 230/115/13.8KV TRANSFORMER CKT 1	124.9	0.07273	104.538	HEBRON 4 230.00 - MANDAN 4 230.00 230KV CKT 1
16WP	16ALL	0	FROM->TO	G17_109	DICKINSON (KW1A 100) 230/115/13.8KV TRANSFORMER CKT 1	125	0.07264	102.6656	DICKINSON - HEBRON 4 230.00 230KV CKT 1
16WP	16ALL	0	FROM->TO	G17_109	DICKINSON (KW1A 100) 230/115/13.8KV TRANSFORMER CKT 1	125	0.07264	118.1856	HEBRON 4 230.00 - MANDAN 4 230.00 230KV CKT 1
16WP	16ALL	0	FROM->TO	G17_109	DICKINSON (KW1A 100) 230/115/13.8KV TRANSFORMER CKT 1	124.4	0.07264	103.4019	DICKINSON - HEBRON 4 230.00 230KV CKT 1
16WP	16ALL	0	FROM->TO	G17_109	DICKINSON (KW1A 100) 230/115/13.8KV TRANSFORMER CKT 1	124.4	0.07264	118.9968	HEBRON 4 230.00 - MANDAN 4 230.00 230KV CKT 1
25SP	16ALL	0	FROM->TO	G17_109	DICKINSON (KW1A 100) 230/115/13.8KV TRANSFORMER CKT 1	125	0.07263	126.1152	HEBRON 4 230.00 - MANDAN 4 230.00 230KV CKT 1
25SP	16ALL	0	FROM->TO	G17_109	DICKINSON (KW1A 100) 230/115/13.8KV TRANSFORMER CKT 1	124.6	0.07263	126.8411	HEBRON 4 230.00 - MANDAN 4 230.00 230KV CKT 1
20SP	16ALL	0	FROM->TO	G17_109	DICKINSON (KW1A 100) 230/115/13.8KV TRANSFORMER CKT 1	124.9	0.07252	106.4051	DICKINSON - HEBRON 4 230.00 230KV CKT 1
20SP	16ALL	0	FROM->TO	G17_109	DICKINSON (KW1A 100) 230/115/13.8KV TRANSFORMER CKT 1	124.9	0.07252	119.6157	HEBRON 4 230.00 - MANDAN 4 230.00 230KV CKT 1
20SP	16ALL	0	FROM->TO	G17_109	DICKINSON (KW1A 100) 230/115/13.8KV TRANSFORMER CKT 1	124.3	0.07252	107.1601	DICKINSON - HEBRON 4 230.00 230KV CKT 1
20SP	16ALL	0	FROM->TO	G17_109	DICKINSON (KW1A 100) 230/115/13.8KV TRANSFORMER CKT 1	124.3	0.07252	120.4344	HEBRON 4 230.00 - MANDAN 4 230.00 230KV CKT 1
20WP	16ALL	0	FROM->TO	G17_109	DICKINSON (KW1A 100) 230/115/13.8KV TRANSFORMER CKT 1	124.9	0.07221	112.4708	HEBRON 4 230.00 - MANDAN 4 230.00 230KV CKT 1
20WP	16ALL	0	FROM->TO	G17_109	DICKINSON (KW1A 100) 230/115/13.8KV TRANSFORMER CKT 1	124.9	0.07221	112.711	HEBRON 4 230.00 - MANDAN 4 230.00 230KV CKT 1
16WP	16ALL	0	FROM->TO	G17_109	DICKINSON (KW1A 100) 230/115/13.8KV TRANSFORMER CKT 1	125	0.04957	109.6832	HETINGER (HETTINGR TR1) 230/115/13.8KV TRANSFORMER CKT 1
16WP	16ALL	0	FROM->TO	G17_109	DICKINSON (KW1A 100) 230/115/13.8KV TRANSFORMER CKT 1	124.4	0.04957	110.4534	HETINGER (HETTINGR TR1) 230/115/13.8KV TRANSFORMER CKT 1
20WP	16ALL	0	FROM->TO	G17_109	DICKINSON (KW1A 100) 230/115/13.8KV TRANSFORMER CKT 1	124.9	0.04944	106.5268	HETINGER (HETTINGR TR1) 230/115/13.8KV TRANSFORMER CKT 1
20WP	16ALL	0	FROM->TO	G17_109	DICKINSON (KW1A 100) 230/115/13.8KV TRANSFORMER CKT 1	124.9	0.04944	106.687	HETINGER (HETTINGR TR1) 230/115/13.8KV TRANSFORMER CKT 1
16WP	16ALL	0	FROM->TO	G17_109	DICKINSON (KW1A 100) 230/115/13.8KV TRANSFORMER CKT 1	125	0.04549	100.8704	CHARLIE CREEK - KILDEER 115KV CKT 1
16WP	16ALL	0	FROM->TO	G17_109	DICKINSON (KW1A 100) 230/115/13.8KV TRANSFORMER CKT 1	124.4	0.04549	101.5981	CHARLIE CREEK - KILDEER 115KV CKT 1
16WP	16ALL	0	FROM->TO	G17_109	DICKINSON (KW1A 100) 230/115/13.8KV TRANSFORMER CKT 1	125	0.04425	101.904	CENTER - SQUARE BUTTE 230KV CKT 1
16WP	16ALL	0	FROM->TO	G17_109	DICKINSON (KW1A 100) 230/115/13.8KV TRANSFORMER CKT 1	124.4	0.04425	102.6367	CENTER - SQUARE BUTTE 230KV CKT 1
17SP	16ALL	0	FROM->TO	G17_109	DICKINSON (KW1A 100) 230/115/13.8KV TRANSFORMER CKT 1	124.7	0.04422	99.9904	BROADLAND - HURON 230KV CKT 1
17SP	16ALL	0	FROM->TO	G17_109	DICKINSON (KW1A 100) 230/115/13.8KV TRANSFORMER CKT 1	124.7	0.04422	100.0706	P13:345:UMZB:# 244 #: BD IN SD. LOSS OF TX
17SP	16ALL	0	FROM->TO	G17_109	DICKINSON (KW1A 100) 230/115/13.8KV TRANSFORMER CKT 1	124.7	0.04422	100.0706	HURON (BD KU2A) 345/230/13.8KV TRANSFORMER CKT 1
17SP	16ALL	0	FROM->TO	G17_109	DICKINSON (KW1A 100) 230/115/13.8KV TRANSFORMER CKT 1	124.7	0.04422	100.0706	ANTELOP-LNX3345.00 - BRDLAND-LNX3345.00 345KV CKT 1
17SP	16ALL	0	FROM->TO	G17_109	DICKINSON (KW1A 100) 230/115/13.8KV TRANSFORMER CKT 1	124.7	0.04422	100.0706	BRDLAND-LNX3345.00 - HURON 345KV CKT Z
17SP	16ALL	0	FROM->TO	G17_109	DICKINSON (KW1A 100) 230/115/13.8KV TRANSFORMER CKT 1	124.7	0.04422	100.231	P12:345:UMZB:# 103 #: BD IN SD. LOSS OF LINE
17SP	16ALL	0	FROM->TO	G17_109	DICKINSON (KW1A 100) 230/115/13.8KV TRANSFORMER CKT 1	124.7	0.04422	100.231	P12:345:UMZB:# 102 #: AVS BD IN ND. AVS BRD LR
17SP	16ALL	0	FROM->TO	G17_109	DICKINSON (KW1A 100) 230/115/13.8KV TRANSFORMER CKT 1	124.7	0.04422	100.231	ANTELOP-LNX3345.00 - ANTELOPE VALLEY 345KV CKT Z
16WP	16ALL	0	FROM->TO	G17_109	DICKINSON (KW1A 100) 230/115/13.8KV TRANSFORMER CKT 1	125	0.04406	100.0192	ANTELOP-LNX3345.00 - ANTELOPE VALLEY 345KV CKT Z
16WP	16ALL	0	FROM->TO	G17_109	DICKINSON (KW1A 100) 230/115/13.8KV TRANSFORMER CKT 1	125	0.04406	100.0992	P12:345:UMZB:# 103 #: BD IN SD. LOSS OF LINE
16WP	16ALL	0	FROM->TO	G17_109	DICKINSON (KW1A 100) 230/115/13.8KV TRANSFORMER CKT 1	125	0.04406	100.0992	P12:345:UMZB:# 102 #: AVS BD IN ND. AVS BRD LR
16WP	16ALL	0	FROM->TO	G17_109	DICKINSON (KW1A 100) 230/115/13.8KV TRANSFORMER CKT 1	124.4	0.04406	100.6624	HURON (BD KU2A) 345/230/13.8KV TRANSFORMER CKT 1
16WP	16ALL	0	FROM->TO	G17_109	DICKINSON (KW1A 100) 230/115/13.8KV TRANSFORMER CKT 1	124.4	0.04406	100.6624	P13:345:UMZB:# 244 #: BD IN SD. LOSS OF TX
16WP	16ALL	0	FROM->TO	G17_109	DICKINSON (KW1A 100) 230/115/13.8KV TRANSFORMER CKT 1	124.4	0.04406	100.6624	BRDLAND-LNX3345.00 - HURON 345KV CKT Z
16WP	16ALL	0	FROM->TO	G17_109	DICKINSON (KW1A 100) 230/115/13.8KV TRANSFORMER CKT 1	124.4	0.04406	100.6624	ANTELOP-LNX3345.00 - BRDLAND-LNX3345.00 345KV CKT 1
16WP	16ALL	0	FROM->TO	G17_109	DICKINSON (KW1A 100) 230/115/13.8KV TRANSFORMER CKT 1	124.4	0.04406	100.7428	P12:345:UMZB:# 103 #: BD IN SD. LOSS OF LINE
16WP	16ALL	0	FROM->TO	G17_109	DICKINSON (KW1A 100) 230/115/13.8KV TRANSFORMER CKT 1	124.4	0.04406	100.7428	P12:345:UMZB:# 102 #: AVS BD IN ND. AVS BRD LR
16WP	16ALL	0	FROM->TO	G17_109	DICKINSON (KW1A 100) 230/115/13.8KV TRANSFORMER CKT 1	124.4	0.04406	100.7428	ANTELOP-LNX3345.00 - ANTELOPE VALLEY 345KV CKT Z
25SP	16ALL	0	FROM->TO	G17_109	DICKINSON (KW1A 100) 230/115/13.8KV TRANSFORMER CKT 1	125	0.0436	108.4704	CENTER - SQUARE BUTTE 230KV CKT 1
25SP	16ALL	0	FROM->TO	G17_109	DICKINSON (KW1A 100) 230/115/13.8KV TRANSFORMER CKT 1	124.6	0.0436	109.0594	CENTER - SQUARE BUTTE 230KV CKT 1
25SP	16ALL	0	FROM->TO	G17_109	DICKINSON (KW1A 100) 230/115/13.8KV TRANSFORMER CKT 1	125	0.04358	109.1872	P13:345:UMZB:# 244 #: BD IN SD. LOSS OF TX
25SP	16ALL	0	FROM->TO	G17_109	DICKINSON (KW1A 100) 230/115/13.8KV TRANSFORMER CKT 1	125	0.04358	109.1872	HURON (BD KU2A) 345/230/13.8KV TRANSFORMER CKT 1
25SP	16ALL	0	FROM->TO	G17_109	DICKINSON (KW1A 100) 230/115/13.8KV TRANSFORMER CKT 1	125	0.04358	109.1872	ANTELOP-LNX3345.00 - BRDLAND-LNX3345.00 345KV CKT 1
25SP	16ALL	0	FROM->TO	G17_109	DICKINSON (KW1A 100) 230/115/13.8KV TRANSFORMER CKT 1	125	0.04358	109.1872	BRDLAND-LNX3345.00 - HURON 345KV CKT Z
25SP	16ALL	0	FROM->TO	G17_109	DICKINSON (KW1A 100) 230/115/13.8KV TRANSFORMER CKT 1	125	0.04358	109.1872	BROADLAND - HURON 230KV CKT 1
25SP	16ALL	0	FROM->TO	G17_109	DICKINSON (KW1A 100) 230/115/13.8KV TRANSFORMER CKT 1	125	0.04358	109.3472	P12:345:UMZB:# 103 #: BD IN SD. LOSS OF LINE
25SP	16ALL	0	FROM->TO	G17_109	DICKINSON (KW1A 100) 230/115/13.8KV TRANSFORMER CKT 1	125	0.04358	109.3472	P12:345:UMZB:# 102 #: AVS BD IN ND. AVS BRD LR
25SP	16ALL	0	FROM->TO	G17_109	DICKINSON (KW1A 100) 230/115/13.8KV TRANSFORMER CKT 1	125	0.04358	109.3472	ANTELOP-LNX3345.00 - ANTELOPE VALLEY 345KV CKT Z
25SP	16ALL	0	FROM->TO	G17_109	DICKINSON (KW1A 100) 230/115/13.8KV TRANSFORMER CKT 1	124.6	0.04358	109.7785	P13:345:UMZB:# 244 #: BD IN SD. LOSS OF TX
25SP	16ALL	0	FROM->TO	G17_109	DICKINSON (KW1A 100) 230/115/13.8KV TRANSFORMER CKT 1	124.6	0.04358	109.7785	HURON (BD KU2A) 345/230/13.8KV TRANSFORMER CKT 1
25SP	16ALL	0	FROM->TO	G17_109	DICKINSON (KW1A 100) 230/115/13.8KV TRANSFORMER CKT 1	124.6	0.04358	109.7785	BRDLAND-LNX3345.00 - HURON 345KV CKT Z

SEASON	GROUP	SCENARIO	DIRECTION	SOURCE	MONITORED ELEMENT	RATE (MVA)	TDF	CONTINGENCY LOADING %	CONTINGENCY
25SP	16ALL	0	FROM->TO	G17_109	DICKINSON (KW1A 100) 230/115/13.8KV TRANSFORMER CKT 1	124.6	0.04358	109.7785	ANTELOP-LNX3345.00 - BRDLAND-LNX3345.00 345KV CKT 1
25SP	16ALL	0	FROM->TO	G17_109	DICKINSON (KW1A 100) 230/115/13.8KV TRANSFORMER CKT 1	124.6	0.04358	109.7785	BROADLAND - HURON 230KV CKT 1
25SP	16ALL	0	FROM->TO	G17_109	DICKINSON (KW1A 100) 230/115/13.8KV TRANSFORMER CKT 1	124.6	0.04358	109.939	ANTELOP-LNX3345.00 - ANTELOPE VALLEY 345KV CKT Z
25SP	16ALL	0	FROM->TO	G17_109	DICKINSON (KW1A 100) 230/115/13.8KV TRANSFORMER CKT 1	124.6	0.04358	110.0193	P12:345:UMZB:# 103 #: BD IN SD. LOSS OF LINE
25SP	16ALL	0	FROM->TO	G17_109	DICKINSON (KW1A 100) 230/115/13.8KV TRANSFORMER CKT 1	124.6	0.04358	110.0193	P12:345:UMZB:# 102 #: AVS BD IN ND. AVS BRD LR
20SP	16ALL	0	FROM->TO	G17_109	DICKINSON (KW1A 100) 230/115/13.8KV TRANSFORMER CKT 1	124.9	0.0435	102.2034	CENTER - SQUARE BUTTE 230KV CKT 1
20SP	16ALL	0	FROM->TO	G17_109	DICKINSON (KW1A 100) 230/115/13.8KV TRANSFORMER CKT 1	124.3	0.0435	102.938	CENTER - SQUARE BUTTE 230KV CKT 1
20SP	16ALL	0	FROM->TO	G17_109	DICKINSON (KW1A 100) 230/115/13.8KV TRANSFORMER CKT 1	124.9	0.04348	101.3195	HURON (BD KU2A) 345/230/13.8KV TRANSFORMER CKT 1
20SP	16ALL	0	FROM->TO	G17_109	DICKINSON (KW1A 100) 230/115/13.8KV TRANSFORMER CKT 1	124.9	0.04348	101.3195	P13:345:UMZB:# 244 #: BD IN SD. LOSS OF TX
20SP	16ALL	0	FROM->TO	G17_109	DICKINSON (KW1A 100) 230/115/13.8KV TRANSFORMER CKT 1	124.9	0.04348	101.3195	ANTELOP-LNX3345.00 - BRDLAND-LNX3345.00 345KV CKT 1
20SP	16ALL	0	FROM->TO	G17_109	DICKINSON (KW1A 100) 230/115/13.8KV TRANSFORMER CKT 1	124.9	0.04348	101.3195	BRDLAND-LNX3345.00 - HURON 345KV CKT Z
20SP	16ALL	0	FROM->TO	G17_109	DICKINSON (KW1A 100) 230/115/13.8KV TRANSFORMER CKT 1	124.9	0.04348	101.3195	BROADLAND - HURON 230KV CKT 1
20SP	16ALL	0	FROM->TO	G17_109	DICKINSON (KW1A 100) 230/115/13.8KV TRANSFORMER CKT 1	124.9	0.04348	101.4796	P12:345:UMZB:# 103 #: BD IN SD. LOSS OF LINE
20SP	16ALL	0	FROM->TO	G17_109	DICKINSON (KW1A 100) 230/115/13.8KV TRANSFORMER CKT 1	124.9	0.04348	101.4796	P12:345:UMZB:# 102 #: AVS BD IN ND. AVS BRD LR
20SP	16ALL	0	FROM->TO	G17_109	DICKINSON (KW1A 100) 230/115/13.8KV TRANSFORMER CKT 1	124.9	0.04348	101.4796	ANTELOP-LNX3345.00 - ANTELOPE VALLEY 345KV CKT Z
20SP	16ALL	0	FROM->TO	G17_109	DICKINSON (KW1A 100) 230/115/13.8KV TRANSFORMER CKT 1	124.3	0.04348	102.0499	P13:345:UMZB:# 244 #: BD IN SD. LOSS OF TX
20SP	16ALL	0	FROM->TO	G17_109	DICKINSON (KW1A 100) 230/115/13.8KV TRANSFORMER CKT 1	124.3	0.04348	102.0499	HURON (BD KU2A) 345/230/13.8KV TRANSFORMER CKT 1
20SP	16ALL	0	FROM->TO	G17_109	DICKINSON (KW1A 100) 230/115/13.8KV TRANSFORMER CKT 1	124.3	0.04348	102.0499	BRDLAND-LNX3345.00 - HURON 345KV CKT Z
20SP	16ALL	0	FROM->TO	G17_109	DICKINSON (KW1A 100) 230/115/13.8KV TRANSFORMER CKT 1	124.3	0.04348	102.0499	ANTELOP-LNX3345.00 - BRDLAND-LNX3345.00 345KV CKT 1
20SP	16ALL	0	FROM->TO	G17_109	DICKINSON (KW1A 100) 230/115/13.8KV TRANSFORMER CKT 1	124.3	0.04348	102.0499	BROADLAND - HURON 230KV CKT 1
20SP	16ALL	0	FROM->TO	G17_109	DICKINSON (KW1A 100) 230/115/13.8KV TRANSFORMER CKT 1	124.3	0.04348	102.2108	P12:345:UMZB:# 103 #: BD IN SD. LOSS OF LINE
20SP	16ALL	0	FROM->TO	G17_109	DICKINSON (KW1A 100) 230/115/13.8KV TRANSFORMER CKT 1	124.3	0.04348	102.2108	P12:345:UMZB:# 102 #: AVS BD IN ND. AVS BRD LR
20SP	16ALL	0	FROM->TO	G17_109	DICKINSON (KW1A 100) 230/115/13.8KV TRANSFORMER CKT 1	124.3	0.04348	102.2108	ANTELOP-LNX3345.00 - ANTELOPE VALLEY 345KV CKT Z
25SP	16ALL	0	FROM->TO	G17_109	DICKINSON (KW1A 100) 230/115/13.8KV TRANSFORMER CKT 1	125	0.04324	108.0608	P12:345:UMZB:# 108 #: LOS FT IN ND. LOS FT
25SP	16ALL	0	FROM->TO	G17_109	DICKINSON (KW1A 100) 230/115/13.8KV TRANSFORMER CKT 1	125	0.04324	108.0608	LELAND OLDS - LELAND2-LNX3345.00 345KV CKT Z
25SP	16ALL	0	FROM->TO	G17_109	DICKINSON (KW1A 100) 230/115/13.8KV TRANSFORMER CKT 1	125	0.04324	108.5408	FT THOMPSON - FTTHOM1-LNX3345.00 345KV CKT Z
25SP	16ALL	0	FROM->TO	G17_109	DICKINSON (KW1A 100) 230/115/13.8KV TRANSFORMER CKT 1	125	0.04324	108.5408	FTTHOM1-LNX3345.00 - G16-017-TAP 345.00 345KV CKT 1
25SP	16ALL	0	FROM->TO	G17_109	DICKINSON (KW1A 100) 230/115/13.8KV TRANSFORMER CKT 1	124.6	0.04324	108.6485	P12:345:UMZB:# 108 #: LOS FT IN ND. LOS FT
25SP	16ALL	0	FROM->TO	G17_109	DICKINSON (KW1A 100) 230/115/13.8KV TRANSFORMER CKT 1	124.6	0.04324	108.6485	LELAND OLDS - LELAND2-LNX3345.00 345KV CKT Z
25SP	16ALL	0	FROM->TO	G17_109	DICKINSON (KW1A 100) 230/115/13.8KV TRANSFORMER CKT 1	124.6	0.04324	109.2103	FT THOMPSON - FTTHOM1-LNX3345.00 345KV CKT Z
25SP	16ALL	0	FROM->TO	G17_109	DICKINSON (KW1A 100) 230/115/13.8KV TRANSFORMER CKT 1	124.6	0.04324	109.2103	FTTHOM1-LNX3345.00 - G16-017-TAP 345.00 345KV CKT 1
20SP	16ALL	0	FROM->TO	G17_109	DICKINSON (KW1A 100) 230/115/13.8KV TRANSFORMER CKT 1	124.9	0.04313	100.6725	FT THOMPSON - FTTHOM1-LNX3345.00 345KV CKT Z
20SP	16ALL	0	FROM->TO	G17_109	DICKINSON (KW1A 100) 230/115/13.8KV TRANSFORMER CKT 1	124.9	0.04313	100.6725	FTTHOM1-LNX3345.00 - G16-017-TAP 345.00 345KV CKT 1
20SP	16ALL	0	FROM->TO	G17_109	DICKINSON (KW1A 100) 230/115/13.8KV TRANSFORMER CKT 1	124.3	0.04313	100.9171	P12:345:UMZB:# 108 #: LOS FT IN ND. LOS FT
20SP	16ALL	0	FROM->TO	G17_109	DICKINSON (KW1A 100) 230/115/13.8KV TRANSFORMER CKT 1	124.3	0.04313	101.3998	FT THOMPSON - FTTHOM1-LNX3345.00 345KV CKT Z
20SP	16ALL	0	FROM->TO	G17_109	DICKINSON (KW1A 100) 230/115/13.8KV TRANSFORMER CKT 1	124.3	0.04313	101.3998	FTTHOM1-LNX3345.00 - G16-017-TAP 345.00 345KV CKT 1
17SP	16ALL	0	FROM->TO	G17_109	DICKINSON (KW1A 100) 230/115/13.8KV TRANSFORMER CKT 1	124.7	0.04133	100.2983	G752CLC4 230.00 230/34.5KV TRANSFORMER CKT 1
17SP	16ALL	0	FROM->TO	G17_109	DICKINSON (KW1A 100) 230/115/13.8KV TRANSFORMER CKT 1	124.7	0.04133	100.2983	G752CLC4 230.00 - HETINGER 230KV CKT 1
16WP	16ALL	0	FROM->TO	G17_109	DICKINSON (KW1A 100) 230/115/13.8KV TRANSFORMER CKT 1	125	0.04119	101.296	G752CLC4 230.00 230/34.5KV TRANSFORMER CKT 1
16WP	16ALL	0	FROM->TO	G17_109	DICKINSON (KW1A 100) 230/115/13.8KV TRANSFORMER CKT 1	125	0.04119	101.296	G752CLC4 230.00 - HETINGER 230KV CKT 1
16WP	16ALL	0	FROM->TO	G17_109	DICKINSON (KW1A 100) 230/115/13.8KV TRANSFORMER CKT 1	125	0.04119	102.416	COYOTE 345/24.0KV TRANSFORMER CKT 1
16WP	16ALL	0	FROM->TO	G17_109	DICKINSON (KW1A 100) 230/115/13.8KV TRANSFORMER CKT 1	124.4	0.04119	102.0257	G752CLC4 230.00 - HETINGER 230KV CKT 1
16WP	16ALL	0	FROM->TO	G17_109	DICKINSON (KW1A 100) 230/115/13.8KV TRANSFORMER CKT 1	124.4	0.04119	102.0257	G752CLC4 230.00 230/34.5KV TRANSFORMER CKT 1
16WP	16ALL	0	FROM->TO	G17_109	DICKINSON (KW1A 100) 230/115/13.8KV TRANSFORMER CKT 1	124.4	0.04119	103.1511	COYOTE 345/24.0KV TRANSFORMER CKT 1
25SP	16ALL	0	FROM->TO	G17_109	DICKINSON (KW1A 100) 230/115/13.8KV TRANSFORMER CKT 1	125	0.04084	109.056	COYOTE 345/24.0KV TRANSFORMER CKT 1
25SP	16ALL	0	FROM->TO	G17_109	DICKINSON (KW1A 100) 230/115/13.8KV TRANSFORMER CKT 1	125	0.04084	110.016	G752CLC4 230.00 - HETINGER 230KV CKT 1
25SP	16ALL	0	FROM->TO	G17_109	DICKINSON (KW1A 100) 230/115/13.8KV TRANSFORMER CKT 1	125	0.04084	110.016	G752CLC4 230.00 230/34.5KV TRANSFORMER CKT 1
25SP	16ALL	0	FROM->TO	G17_109	DICKINSON (KW1A 100) 230/115/13.8KV TRANSFORMER CKT 1	124.6	0.04084	109.7271	COYOTE 345/24.0KV TRANSFORMER CKT 1
25SP	16ALL	0	FROM->TO	G17_109	DICKINSON (KW1A 100) 230/115/13.8KV TRANSFORMER CKT 1	124.6	0.04084	110.61	G752CLC4 230.00 - HETINGER 230KV CKT 1
25SP	16ALL	0	FROM->TO	G17_109	DICKINSON (KW1A 100) 230/115/13.8KV TRANSFORMER CKT 1	124.6	0.04084	110.61	G752CLC4 230.00 230/34.5KV TRANSFORMER CKT 1
20SP	16ALL	0	FROM->TO	G17_109	DICKINSON (KW1A 100) 230/115/13.8KV TRANSFORMER CKT 1	124.9	0.04075	100.8711	COYOTE 345/24.0KV TRANSFORMER CKT 1
20SP	16ALL	0	FROM->TO	G17_109	DICKINSON (KW1A 100) 230/115/13.8KV TRANSFORMER CKT 1	124.9	0.04075	102.3123	G752CLC4 230.00 - HETINGER 230KV CKT 1
20SP	16ALL	0	FROM->TO	G17_109	DICKINSON (KW1A 100) 230/115/13.8KV TRANSFORMER CKT 1	124.9	0.04075	102.3123	G752CLC4 230.00 230/34.5KV TRANSFORMER CKT 1
20SP	16ALL	0	FROM->TO	G17_109	DICKINSON (KW1A 100) 230/115/13.8KV TRANSFORMER CKT 1	124.3	0.04075	101.5994	COYOTE 345/24.0KV TRANSFORMER CKT 1
20SP	16ALL	0	FROM->TO	G17_109	DICKINSON (KW1A 100) 230/115/13.8KV TRANSFORMER CKT 1	124.3	0.04075	103.0475	G752CLC4 230.00 - HETINGER 230KV CKT 1

SEASON	GROUP	SCENARIO	DIRECTION	SOURCE	MONITORED ELEMENT	RATE (MVA)	TDF	CONTINGENCY LOADING %	CONTINGENCY
20SP	16ALL	0	FROM->TO	G17_109	DICKINSON (KW1A 100) 230/115/13.8KV TRANSFORMER CKT 1	124.3	0.04075	103.0475	G752CLC4 230.00 230/34.5KV TRANSFORMER CKT 1
20WP	16ALL	0	FROM->TO	G17_109	DICKINSON (KW1A 100) 230/115/13.8KV TRANSFORMER CKT 1	124.9	0.04057	100.4932	G752CLC4 230.00 230/34.5KV TRANSFORMER CKT 1
20WP	16ALL	0	FROM->TO	G17_109	DICKINSON (KW1A 100) 230/115/13.8KV TRANSFORMER CKT 1	124.9	0.04057	100.4932	G752CLC4 230.00 - HETINGER 230KV CKT 1
20WP	16ALL	0	FROM->TO	G17_109	DICKINSON (KW1A 100) 230/115/13.8KV TRANSFORMER CKT 1	124.9	0.04057	100.7334	G752CLC4 230.00 - HETINGER 230KV CKT 1
20WP	16ALL	0	FROM->TO	G17_109	DICKINSON (KW1A 100) 230/115/13.8KV TRANSFORMER CKT 1	124.9	0.04057	100.7334	G752CLC4 230.00 230/34.5KV TRANSFORMER CKT 1
20WP	16ALL	0	FROM->TO	G17_109	DICKINSON (KW1A 100) 230/115/13.8KV TRANSFORMER CKT 1	124.9	0.04057	101.3739	COYOTE 345/24.0KV TRANSFORMER CKT 1
20WP	16ALL	0	FROM->TO	G17_109	DICKINSON (KW1A 100) 230/115/13.8KV TRANSFORMER CKT 1	124.9	0.04057	101.6141	COYOTE 345/24.0KV TRANSFORMER CKT 1
16WP	16ALL	0	FROM->TO	G17_109	DICKINSON (KW1A 100) 230/115/13.8KV TRANSFORMER CKT 1	125	0.03913	100.3648	CHARLIE CREEK (CCR KV2A) 345/115/13.8KV TRANSFORMER CKT 1
16WP	16ALL	0	FROM->TO	G17_109	DICKINSON (KW1A 100) 230/115/13.8KV TRANSFORMER CKT 1	124.4	0.03913	101.09	CHARLIE CREEK (CCR KV2A) 345/115/13.8KV TRANSFORMER CKT 1
20L	16ALL	0	TO->FROM	G17_109	ELK CREEK - NEWELL 115KV CKT 1	89.3	0.05689	101.6528	MAURINE - NUNDRWD-LNX3230.00 230KV CKT 1
20L	16ALL	0	TO->FROM	G17_109	ELK CREEK - NEWELL 115KV CKT 1	89.3	0.05689	101.6528	NUNDRWD - NUNDRWD-LNX3230.00 230KV CKT Z
17SP	16ALL	0	TO->FROM	G17_109	ELLENDALE - J316_SUB 230.00 230KV CKT 1	343	0.04588	118.8245	ELLENDALE - MERRCRT4 230.00 230KV CKT 1
16WP	16ALL	0	TO->FROM	G17_109	ELLENDALE - J316_SUB 230.00 230KV CKT 1	351	0.04528	111.5476	ELLENDALE - MERRCRT4 230.00 230KV CKT 1
17G	16ALL	0	TO->FROM	G17_109	ELLENDALE - J316_SUB 230.00 230KV CKT 1	342.9	0.04494	115.804	ELLENDALE - MERRCRT4 230.00 230KV CKT 1
17SP	16ALL	0	TO->FROM	G17_109	ELLENDALE - MERRCRT4 230.00 230KV CKT 1	383	0.04513	101.34	ELLENDALE - J316_SUB 230.00 230KV CKT 1
17SP	16ALL	0	FROM->TO	G17_109	ELLENDALE - OAKES 230KV CKT 1	350.5	0.04594	107.984	CENTER - JAMESTOWN 345KV CKT 1
17G	16ALL	0	FROM->TO	G17_109	ELLENDALE - OAKES 230KV CKT 1	350.8	0.04581	102.2874	CENTER - JAMESTOWN 345KV CKT 1
16WP	16ALL	0	FROM->TO	G17_109	ELLENDALE - OAKES 230KV CKT 1	350.5	0.04518	100.339	CENTER - JAMESTOWN 345KV CKT 1
17SP	16ALL	0	FROM->TO	G17_109	ELLENDALE - OAKES 230KV CKT 1	350.5	0.04498	104.9563	G09_001IST 345.00 - GROTON 345KV CKT 1
17SP	16ALL	0	FROM->TO	G17_109	ELLENDALE - OAKES 230KV CKT 1	350.5	0.04498	105.6981	G09_001IST 345.00 - WATERTOWN 345KV CKT 1
17SP	16ALL	0	FROM->TO	G17_109	ELLENDALE - OAKES 230KV CKT 1	350.5	0.0446	110.4034	BUFFALO - JAMESTOWN 345KV CKT 1
17G	16ALL	0	FROM->TO	G17_109	ELLENDALE - OAKES 230KV CKT 1	350.8	0.04449	104.9065	BUFFALO - JAMESTOWN 345KV CKT 1
16WP	16ALL	0	FROM->TO	G17_109	ELLENDALE - OAKES 230KV CKT 1	350.5	0.04387	103.8733	BUFFALO - JAMESTOWN 345KV CKT 1
17SP	16ALL	0	FROM->TO	G17_109	ELLENDALE - OAKES 230KV CKT 1	350.5	0.04378	101.018	ABERDEEN JCT - ABERDEEN SIEBRECHT 115KV CKT 1
17SP	16ALL	0	FROM->TO	G17_109	ELLENDALE - OAKES 230KV CKT 1	350.5	0.04378	107.8368	ABERDEEN JCT - ELLENDALE 115KV CKT 1
17SP	16ALL	0	FROM->TO	G17_109	ELLENDALE - OAKES 230KV CKT 1	350.5	0.04378	107.8368	P12:115:UMZZ:# 232 #: AB IN SD. ABERDEEN A TAP BETWEEN ELLENDALE AND ABERDEEN-SIEBRECHT.
17SP	16ALL	0	FROM->TO	G17_109	ELLENDALE - OAKES 230KV CKT 1	350.5	0.04378	109.9195	ELLENDALE (ELLENDL TR1) 230/115/13.8KV TRANSFORMER CKT 1
17G	16ALL	0	FROM->TO	G17_109	ELLENDALE - OAKES 230KV CKT 1	350.8	0.04318	101.6032	ABERDEEN JCT - ABERDEEN SIEBRECHT 115KV CKT 1
17G	16ALL	0	FROM->TO	G17_109	ELLENDALE - OAKES 230KV CKT 1	350.8	0.04318	104.3398	ABERDEEN JCT - ELLENDALE 115KV CKT 1
17G	16ALL	0	FROM->TO	G17_109	ELLENDALE - OAKES 230KV CKT 1	350.8	0.04318	104.3398	P12:115:UMZZ:# 232 #: AB IN SD. ABERDEEN A TAP BETWEEN ELLENDALE AND ABERDEEN-SIEBRECHT.
17G	16ALL	0	FROM->TO	G17_109	ELLENDALE - OAKES 230KV CKT 1	350.8	0.04318	106.1357	ELLENDALE (ELLENDL TR1) 230/115/13.8KV TRANSFORMER CKT 1
16WP	16ALL	0	FROM->TO	G17_109	ELLENDALE - OAKES 230KV CKT 1	350.5	0.04315	101.2325	ABERDEEN JCT - ELLENDALE 115KV CKT 1
16WP	16ALL	0	FROM->TO	G17_109	ELLENDALE - OAKES 230KV CKT 1	350.5	0.04315	101.2325	P12:115:UMZZ:# 232 #: AB IN SD. ABERDEEN A TAP BETWEEN ELLENDALE AND ABERDEEN-SIEBRECHT.
16WP	16ALL	0	FROM->TO	G17_109	ELLENDALE - OAKES 230KV CKT 1	350.5	0.04315	104.7418	ELLENDALE (ELLENDL TR1) 230/115/13.8KV TRANSFORMER CKT 1
17SP	16ALL	0	FROM->TO	G17_109	ELLENDALE - OAKES 230KV CKT 1	350.5	0.04218	104.4519	BISON 3 345.00 - BUFFALO 345KV CKT 1
17SP	16ALL	0	FROM->TO	G17_109	ELLENDALE - OAKES 230KV CKT 1	350.5	0.03904	103.9989	FORBES - ROSEAU 500KV CKT 1
17SP	16ALL	0	FROM->TO	G17_109	ELLENDALE - OAKES 230KV CKT 1	350.5	0.03904	104.2271	ROSEAU - ROSEAUM 2 500.00 500KV CKT 1
17SP	16ALL	0	FROM->TO	G17_109	ELLENDALE - OAKES 230KV CKT 1	350.5	0.03904	104.2271	ROSEAU - ROSEAUM 2 500.00 500KV CKT 1
17SP	16ALL	0	FROM->TO	G17_109	ELLENDALE - OAKES 230KV CKT 1	350.5	0.03904	104.4839	RIEL - ROSEAU 500KV CKT 1
17SP	16ALL	0	FROM->TO	G17_109	ELLENDALE - OAKES 230KV CKT 1	350.5	0.03699	103.216	BIG STONE 230/24.0KV TRANSFORMER CKT 1
17SP	16ALL	0	FROM->TO	G17_109	ELLENDALE - OAKES 230KV CKT 1	318.4	0.03699	104.1055	System Intact
25SP	16ALL	0	TO->FROM	G17_109	ELLENDLMVP4 230.00 - J316_SUB 230.00 230KV CKT 1	342.5	0.06151	138.7142	ELLENDLMVP4 230.00 - MERRCRT4 230.00 230KV CKT 1
20SP	16ALL	0	TO->FROM	G17_109	ELLENDLMVP4 230.00 - J316_SUB 230.00 230KV CKT 1	341.9	0.06133	135.1612	ELLENDLMVP4 230.00 - MERRCRT4 230.00 230KV CKT 1
20WP	16ALL	0	TO->FROM	G17_109	ELLENDLMVP4 230.00 - J316_SUB 230.00 230KV CKT 1	342	0.06046	123.4713	ELLENDLMVP4 230.00 - MERRCRT4 230.00 230KV CKT 1
20L	16ALL	0	TO->FROM	G17_109	ELLENDLMVP4 230.00 - J316_SUB 230.00 230KV CKT 1	342.3	0.0567	117.7236	ELLENDLMVP4 230.00 - MERRCRT4 230.00 230KV CKT 1
25SP	16ALL	0	TO->FROM	G17_109	ELLENDLMVP4 230.00 - J316_SUB 230.00 230KV CKT 1	342.5	0.0416	101.1714	GROTON-LNX3 345.00 - LELAND1-LNX3345.00 345KV CKT 1
25SP	16ALL	0	TO->FROM	G17_109	ELLENDLMVP4 230.00 - J316_SUB 230.00 230KV CKT 1	342.5	0.0416	101.1714	GROTON - GROTON-LNX3 345.00 345KV CKT Z
25SP	16ALL	0	TO->FROM	G17_109	ELLENDLMVP4 230.00 - J316_SUB 230.00 230KV CKT 1	342.5	0.0416	101.3466	P12:345:UMZB:# 109 #: LOS GRT IN ND. LOS GRT
25SP	16ALL	0	TO->FROM	G17_109	ELLENDLMVP4 230.00 - J316_SUB 230.00 230KV CKT 1	342.5	0.0416	101.405	LELAND OLDS - LELAND1-LNX3345.00 345KV CKT Z
25SP	16ALL	0	TO->FROM	G17_109	ELLENDLMVP4 230.00 - J316_SUB 230.00 230KV CKT 1	342.5	0.0407	102.7819	CENTER - JAMESTOWN 345KV CKT 1
20SP	16ALL	0	TO->FROM	G17_109	ELLENDLMVP4 230.00 - J316_SUB 230.00 230KV CKT 1	341.9	0.04059	100.1989	CENTER - JAMESTOWN 345KV CKT 1
25SP	16ALL	0	TO->FROM	G17_109	ELLENDLMVP4 230.00 - J316_SUB 230.00 230KV CKT 1	342.5	0.04027	105.6023	BUFFALO - JAMESTOWN 345KV CKT 1
20SP	16ALL	0	TO->FROM	G17_109	ELLENDLMVP4 230.00 - J316_SUB 230.00 230KV CKT 1	341.9	0.04016	103.0255	BUFFALO - JAMESTOWN 345KV CKT 1
25SP	16ALL	0	TO->FROM	G17_109	ELLENDLMVP4 230.00 - J316_SUB 230.00 230KV CKT 1	342.5	0.03873	101.3734	BISON 3 345.00 - BUFFALO 345KV CKT 1
25SP	16ALL	0	TO->FROM	G17_109	ELLENDLMVP4 230.00 - J316_SUB 230.00 230KV CKT 1	342.5	0.0374	104.0549	FORBES - ROSEAU 500KV CKT 1

SEASON	GROUP	SCENARIO	DIRECTION	SOURCE	MONITORED ELEMENT	RATE (MVA)	TDF	CONTINGENCY LOADING %	CONTINGENCY
25SP	16ALL	0	TO->FROM	G17_109	ELLENDLMVP4 230.00 - J316_SUB 230.00 230KV CKT 1	342.5	0.0374	104.3177	ROSEAU - ROSEAUM 2 500.00 500KV CKT 1
25SP	16ALL	0	TO->FROM	G17_109	ELLENDLMVP4 230.00 - J316_SUB 230.00 230KV CKT 1	342.5	0.0374	104.3177	ROSEAU - ROSEAUM 2 500.00 500KV CKT 1
25SP	16ALL	0	TO->FROM	G17_109	ELLENDLMVP4 230.00 - J316_SUB 230.00 230KV CKT 1	342.5	0.0374	104.5512	RIEL - ROSEAU 500KV CKT 1
20SP	16ALL	0	TO->FROM	G17_109	ELLENDLMVP4 230.00 - J316_SUB 230.00 230KV CKT 1	341.9	0.03731	102.4709	FORBES - ROSEAU 500KV CKT 1
20SP	16ALL	0	TO->FROM	G17_109	ELLENDLMVP4 230.00 - J316_SUB 230.00 230KV CKT 1	341.9	0.03731	102.7341	ROSEAU - ROSEAUM 2 500.00 500KV CKT 1
20SP	16ALL	0	TO->FROM	G17_109	ELLENDLMVP4 230.00 - J316_SUB 230.00 230KV CKT 1	341.9	0.03731	102.7341	ROSEAU - ROSEAUM 2 500.00 500KV CKT 1
20SP	16ALL	0	TO->FROM	G17_109	ELLENDLMVP4 230.00 - J316_SUB 230.00 230KV CKT 1	341.9	0.03731	102.9974	RIEL - ROSEAU 500KV CKT 1
25SP	16ALL	0	TO->FROM	G17_109	ELLENDLMVP4 230.00 - J316_SUB 230.00 230KV CKT 1	318.4	0.0353	101.4234	System Intact
25SP	00NR	0	TO->FROM	G17_109	ELLENDLMVP4 230.00 - J316_SUB 230.00 230KV CKT 1	342.7	0.03445	111.2705	ELLENDLMVP4 230.00 - MERRCRT4 230.00 230KV CKT 1
20SP	00NR	0	TO->FROM	G17_109	ELLENDLMVP4 230.00 - J316_SUB 230.00 230KV CKT 1	342.2	0.03437	110.3444	ELLENDLMVP4 230.00 - MERRCRT4 230.00 230KV CKT 1
25SP	16ALL	0	TO->FROM	G17_109	ELLENDLMVP4 230.00 - MERRCRT4 230.00 230KV CKT 1	382.4	0.06017	117.7228	ELLENDLMVP4 230.00 - J316_SUB 230.00 230KV CKT 1
20SP	16ALL	0	TO->FROM	G17_109	ELLENDLMVP4 230.00 - MERRCRT4 230.00 230KV CKT 1	382.5	0.05999	114.378	ELLENDLMVP4 230.00 - J316_SUB 230.00 230KV CKT 1
20WP	16ALL	0	TO->FROM	G17_109	ELLENDLMVP4 230.00 - MERRCRT4 230.00 230KV CKT 1	382.9	0.05914	104.0888	ELLENDLMVP4 230.00 - J316_SUB 230.00 230KV CKT 1
25SP	16ALL	0	FROM->TO	G17_109	ELLENDLMVP4 230.00 - OAKES 230KV CKT 1	350.4	0.03949	116.4886	BSSOUTH3 345.00 - J436&437_POI345.00 345KV CKT 1
20SP	16ALL	0	FROM->TO	G17_109	ELLENDLMVP4 230.00 - OAKES 230KV CKT 1	350	0.03933	113.5451	BSSOUTH3 345.00 - J436&437_POI345.00 345KV CKT 1
20WP	16ALL	0	FROM->TO	G17_109	ELLENDLMVP4 230.00 - OAKES 230KV CKT 1	350.8	0.03868	107.7104	BSSOUTH3 345.00 - J436&437_POI345.00 345KV CKT 1
17SP	16ALL	0	FROM->TO	G17_109	FALLON - TERRY TAP 115.00 115KV CKT 1	87.3	0.08248	100.5269	DAWSON CREEK - MILES CITY EAST 230KV CKT 1
17SP	16ALL	0	FROM->TO	G17_109	FARGO - SHEYNNE 230KV CKT 1	327.3	0.07824	130.8023	BUFFALO - JAMESTOWN 345KV CKT 1
17SP	16ALL	0	FROM->TO	G17_109	FARGO - SHEYNNE 230KV CKT 1	327.3	0.07818	110.3562	CENTER - JAMESTOWN 345KV CKT 1
20SP	16ALL	0	FROM->TO	G17_109	FARGO - SHEYNNE 230KV CKT 1	329.6	0.07797	111.051	CENTER - JAMESTOWN 345KV CKT 1
25SP	16ALL	0	FROM->TO	G17_109	FARGO - SHEYNNE 230KV CKT 1	329.2	0.07793	113.8056	CENTER - JAMESTOWN 345KV CKT 1
20SP	16ALL	0	FROM->TO	G17_109	FARGO - SHEYNNE 230KV CKT 1	329.6	0.07783	134.0049	BUFFALO - JAMESTOWN 345KV CKT 1
25SP	16ALL	0	FROM->TO	G17_109	FARGO - SHEYNNE 230KV CKT 1	329.2	0.07779	137.0911	BUFFALO - JAMESTOWN 345KV CKT 1
20SP	16ALL	0	FROM->TO	G17_109	FARGO - SHEYNNE 230KV CKT 1	329.6	0.06545	102.1226	BISON 3 345.00 - BUFFALO 345KV CKT 1
25SP	16ALL	0	FROM->TO	G17_109	FARGO - SHEYNNE 230KV CKT 1	329.2	0.06544	103.5614	BISON 3 345.00 - BUFFALO 345KV CKT 1
17SP	16ALL	0	TO->FROM	G17_109	FT RANDAL - FT THOMPSON 230KV CKT 1	319.7	0.06084	101.2462	GRPRAR1-LNX3345.00 - HOLT.CO3 345.00 345KV CKT 1
17SP	16ALL	0	TO->FROM	G17_109	FT RANDAL - FT THOMPSON 230KV CKT 1	319.7	0.06084	101.3713	GRPRAR1-LNX3345.00 - YANKTON 345KV CKT Z
17SP	16ALL	0	TO->FROM	G17_109	FT RANDAL - FT THOMPSON 230KV CKT 1	319.7	0.06084	103.3106	GR ISLD-LNX3345.00 - GRAND ISLAND 345KV CKT Z
17SP	16ALL	0	TO->FROM	G17_109	FT RANDAL - FT THOMPSON 230KV CKT 1	319.7	0.06084	103.3106	GR ISLD-LNX3345.00 - HOLT.CO3 345.00 345KV CKT 1
17SP	16ALL	0	TO->FROM	G17_109	FT RANDAL - FT THOMPSON 230KV CKT 1	319.7	0.06021	103.9662	FT RANDAL - LAKE PLATT 230KV CKT 1
17SP	16ALL	0	TO->FROM	G17_109	FT RANDAL - FT THOMPSON 230KV CKT 1	319.7	0.06021	106.6562	P12:230:UMZW:# 739 #: FT IN SD. FT-LP LINE FAULT
17SP	16ALL	0	TO->FROM	G17_109	FT RANDAL - LAKE PLATT 230KV CKT 1	310.7	0.05948	101.8835	P12:230:UMZW:# 738 #: FT IN SD. FT-FR LINE FAULT
17SP	16ALL	0	TO->FROM	G17_109	G13_001IST 115.00 - SUMMIT 115KV CKT 1	119.1	0.03028	117.2024	G09_001IST 345.00 - GROTON 345KV CKT 1
17SP	16ALL	0	TO->FROM	G17_109	G13_001IST 115.00 - SUMMIT 115KV CKT 1	119.1	0.03028	121.4845	G09_001IST 345.00 - WATERTOWN 345KV CKT 1
17SP	16ALL	0	FROM->TO	G17_109	G13_001IST 115.00 - WATERTOWN 115KV CKT 1	119.8	0.03028	131.2087	G09_001IST 345.00 - GROTON 345KV CKT 1
17SP	16ALL	0	FROM->TO	G17_109	G13_001IST 115.00 - WATERTOWN 115KV CKT 1	119.8	0.03028	135.3823	G09_001IST 345.00 - WATERTOWN 345KV CKT 1
17G	16ALL	0	FROM->TO	G17_109	G13_001IST 115.00 - WATERTOWN 115KV CKT 1	119.3	0.02981	108.7209	G09_001IST 345.00 - GROTON 345KV CKT 1
17G	16ALL	0	FROM->TO	G17_109	G13_001IST 115.00 - WATERTOWN 115KV CKT 1	119.3	0.02981	113.1634	G09_001IST 345.00 - WATERTOWN 345KV CKT 1
17SP	16ALL	0	FROM->TO	G17_109	G14_001IST 115.00 - NEWELL 115KV CKT 1	88.9	0.05935	106.9111	MAURINE - NUNDRWD-LNX3230.00 230KV CKT 1
17SP	16ALL	0	FROM->TO	G17_109	G14_001IST 115.00 - NEWELL 115KV CKT 1	88.9	0.05935	106.9111	NUNDRWD - NUNDRWD-LNX3230.00 230KV CKT Z
20L	16ALL	0	FROM->TO	G17_109	G14_001IST 115.00 - NEWELL 115KV CKT 1	88.4	0.05689	109.5882	MAURINE - NUNDRWD-LNX3230.00 230KV CKT 1
20L	16ALL	0	FROM->TO	G17_109	G14_001IST 115.00 - NEWELL 115KV CKT 1	88.4	0.05689	109.5882	NUNDRWD - NUNDRWD-LNX3230.00 230KV CKT Z
17G	16ALL	0	TO->FROM	G17_109	GARRISON - STANTONTAP 7115.00 115KV CKT 1	121	0.03639	101.081	CENTER - COYOTE 345KV CKT 1
16WP	16ALL	0	TO->FROM	G17_109	GARRISON - STANTONTAP 7115.00 115KV CKT 1	131.9	0.03595	105.1069	CENTER - COYOTE 345KV CKT 1
20WP	16ALL	0	TO->FROM	G17_109	GARRISON - STANTONTAP 7115.00 115KV CKT 1	132	0.03412	105.4061	CENTER - COYOTE 345KV CKT 1
17G	16ALL	0	TO->FROM	G17_109	GERALD GENTLEMAN STATION - OGALLALA 230KV CKT 1	319.5	0.04268	117.3221	GERALD GENTLEMAN STATION - KEYSTONE 345KV CKT 1
20L	16ALL	0	TO->FROM	G17_109	GLENHAM - L3 HAWDON 230KV CKT 1	209.7	0.07068	103.691	BISON - MAURINE 230KV CKT 1
20L	16ALL	0	TO->FROM	G17_109	GLENHAM - L3 HAWDON 230KV CKT 1	209.7	0.07068	105.3123	BISON - HETINGER 230KV CKT 1
17SP	16ALL	0	TO->FROM	G17_109	GLENHAM - L3 HAWDON 230KV CKT 1	210	0.06895	102.3448	G16-017-TAP 345.00 - LELAND2-LNX3345.00 345KV CKT 1
17SP	16ALL	0	TO->FROM	G17_109	GLENHAM - L3 HAWDON 230KV CKT 1	210	0.06895	103.2019	LELAND OLDS - LELAND2-LNX3345.00 345KV CKT Z
17SP	16ALL	0	TO->FROM	G17_109	GLENHAM - L3 HAWDON 230KV CKT 1	210	0.06895	104.1067	P12:345:UMZB:# 108 #: LOS FT IN ND. LOS FT
17SP	16ALL	0	TO->FROM	G17_109	GLENHAM - L3 HAWDON 230KV CKT 1	210	0.06895	105.3924	FTTHOM1-LNX3345.00 - G16-017-TAP 345.00 345KV CKT 1
17SP	16ALL	0	TO->FROM	G17_109	GLENHAM - L3 HAWDON 230KV CKT 1	210	0.06895	105.3924	FT THOMPSON - FTTHOM1-LNX3345.00 345KV CKT Z
17G	16ALL	0	TO->FROM	G17_109	GLENHAM - L3 HAWDON 230KV CKT 1	209.9	0.06715	101.8161	G16-017-TAP 345.00 - LELAND2-LNX3345.00 345KV CKT 1
17G	16ALL	0	TO->FROM	G17_109	GLENHAM - L3 HAWDON 230KV CKT 1	209.9	0.06715	102.5307	LELAND OLDS - LELAND2-LNX3345.00 345KV CKT Z

SEASON	GROUP	SCENARIO	DIRECTION	SOURCE	MONITORED ELEMENT	RATE (MVA)	TDF	CONTINGENCY LOADING %	CONTINGENCY
17G	16ALL	0	TO->FROM	G17_109	GLENHAM - L3 HAWDON 230KV CKT 1	209.9	0.06715	103.5312	P12:345:UMZB:# 108 #: LOS FT IN ND. LOS FT
17G	16ALL	0	TO->FROM	G17_109	GLENHAM - L3 HAWDON 230KV CKT 1	209.9	0.06715	104.8652	FTTHOM1-LNX3345.00 - G16-017-TAP 345.00 345KV CKT 1
17G	16ALL	0	TO->FROM	G17_109	GLENHAM - L3 HAWDON 230KV CKT 1	209.9	0.06715	104.8652	FT THOMPSON - FTTHOM1-LNX3345.00 345KV CKT Z
25SP	16ALL	0	TO->FROM	G17_109	GLENHAM - L3 HAWDON 230KV CKT 1	210	0.0657	100.8648	G16-017-TAP 345.00 - LELAND2-LNX3345.00 345KV CKT 1
25SP	16ALL	0	TO->FROM	G17_109	GLENHAM - L3 HAWDON 230KV CKT 1	210	0.0657	101.6743	LELAND OLDS - LELAND2-LNX3345.00 345KV CKT Z
25SP	16ALL	0	TO->FROM	G17_109	GLENHAM - L3 HAWDON 230KV CKT 1	210	0.0657	102.579	P12:345:UMZB:# 108 #: LOS FT IN ND. LOS FT
25SP	16ALL	0	TO->FROM	G17_109	GLENHAM - L3 HAWDON 230KV CKT 1	210	0.0657	103.8171	FTTHOM1-LNX3345.00 - G16-017-TAP 345.00 345KV CKT 1
25SP	16ALL	0	TO->FROM	G17_109	GLENHAM - L3 HAWDON 230KV CKT 1	210	0.0657	103.8171	FT THOMPSON - FTTHOM1-LNX3345.00 345KV CKT Z
20L	16ALL	0	TO->FROM	G17_109	GLENHAM - L3 HAWDON 230KV CKT 1	209.7	0.06249	109.5928	G16-017-TAP 345.00 - LELAND2-LNX3345.00 345KV CKT 1
20L	16ALL	0	TO->FROM	G17_109	GLENHAM - L3 HAWDON 230KV CKT 1	209.7	0.06249	110.2127	LELAND OLDS - LELAND2-LNX3345.00 345KV CKT Z
20L	16ALL	0	TO->FROM	G17_109	GLENHAM - L3 HAWDON 230KV CKT 1	209.7	0.06249	111.2141	P12:345:UMZB:# 108 #: LOS FT IN ND. LOS FT
20L	16ALL	0	TO->FROM	G17_109	GLENHAM - L3 HAWDON 230KV CKT 1	209.7	0.06249	112.5494	FT THOMPSON - FTTHOM1-LNX3345.00 345KV CKT Z
20L	16ALL	0	TO->FROM	G17_109	GLENHAM - L3 HAWDON 230KV CKT 1	209.7	0.06249	112.5494	FTTHOM1-LNX3345.00 - G16-017-TAP 345.00 345KV CKT 1
20L	16ALL	0	TO->FROM	G17_109	GLENHAM - L3 HAWDON 230KV CKT 1	209.7	0.05674	101.154	BROADLAND - HURON 230KV CKT 1
20L	16ALL	0	TO->FROM	G17_109	GLENHAM - L3 HAWDON 230KV CKT 1	209.7	0.05674	101.2017	BRDLAND-LNX3345.00 - HURON 345KV CKT Z
20L	16ALL	0	TO->FROM	G17_109	GLENHAM - L3 HAWDON 230KV CKT 1	209.7	0.05674	101.2017	ANTELOP-LNX3345.00 - BRDLAND-LNX3345.00 345KV CKT 1
20L	16ALL	0	TO->FROM	G17_109	GLENHAM - L3 HAWDON 230KV CKT 1	209.7	0.05674	101.2017	P13:345:UMZB:# 244 #: BD IN SD. LOSS OF TX
20L	16ALL	0	TO->FROM	G17_109	GLENHAM - L3 HAWDON 230KV CKT 1	209.7	0.05674	101.2017	HURON (BD KU2A) 345/230/13.8KV TRANSFORMER CKT 1
20L	16ALL	0	TO->FROM	G17_109	GLENHAM - L3 HAWDON 230KV CKT 1	209.7	0.05674	101.3925	P12:345:UMZB:# 102 #: AVS BD IN ND. AVS BRD LR
20L	16ALL	0	TO->FROM	G17_109	GLENHAM - L3 HAWDON 230KV CKT 1	209.7	0.05674	101.3925	P12:345:UMZB:# 103 #: BD IN SD. LOSS OF LINE
20L	16ALL	0	TO->FROM	G17_109	GLENHAM - L3 HAWDON 230KV CKT 1	209.7	0.05674	101.4402	ANTELOP-LNX3345.00 - ANTELOPE VALLEY 345KV CKT Z
17SP	16ALL	0	TO->FROM	G17_109	GLENHAM - L3 HAWDON 230KV CKT 1	210	0.05515	102.2114	FORBES - ROSEAU 500KV CKT 1
17SP	16ALL	0	TO->FROM	G17_109	GLENHAM - L3 HAWDON 230KV CKT 1	210	0.05515	102.8781	ROSEAU - ROSEAUM 2 500.00 500KV CKT 1
17SP	16ALL	0	TO->FROM	G17_109	GLENHAM - L3 HAWDON 230KV CKT 1	210	0.05515	102.8781	ROSEAU - ROSEAUM 2 500.00 500KV CKT 1
17SP	16ALL	0	TO->FROM	G17_109	GLENHAM - L3 HAWDON 230KV CKT 1	210	0.05515	103.4971	RIEL - ROSEAU 500KV CKT 1
25SP	16ALL	0	TO->FROM	G17_109	GLENHAM - L3 HAWDON 230KV CKT 1	210	0.05234	100.3181	RIEL - ROSEAU 500KV CKT 1
20L	16ALL	0	TO->FROM	G17_109	GLENHAM - L3 HAWDON 230KV CKT 1	209.7	0.05002	103.5899	FORBES - ROSEAU 500KV CKT 1
20L	16ALL	0	TO->FROM	G17_109	GLENHAM - L3 HAWDON 230KV CKT 1	209.7	0.05002	103.876	ROSEAU - ROSEAUM 2 500.00 500KV CKT 1
20L	16ALL	0	TO->FROM	G17_109	GLENHAM - L3 HAWDON 230KV CKT 1	209.7	0.05002	103.876	ROSEAU - ROSEAUM 2 500.00 500KV CKT 1
20L	16ALL	0	TO->FROM	G17_109	GLENHAM - L3 HAWDON 230KV CKT 1	209.7	0.05002	104.1621	RIEL - ROSEAU 500KV CKT 1
17SP	16ALL	0	FROM->TO	G17_109	GRANITE FALLS - MN VALLEY TAP 230KV CKT 1	258.4	0.05758	115.7848	GRANITE FALLS - MN VALLEY TAP 230KV CKT 1
17G	16ALL	0	FROM->TO	G17_109	GRANITE FALLS - MN VALLEY TAP 230KV CKT 1	257.9	0.05729	110.3001	GRANITE FALLS - MN VALLEY TAP 230KV CKT 1
25SP	16ALL	0	FROM->TO	G17_109	GRANITE FALLS - MN VALLEY TAP 230KV CKT 1	257.6	0.05084	103.5621	GRANITE FALLS - MN VALLEY TAP 230KV CKT 1
20SP	16ALL	0	FROM->TO	G17_109	GRANITE FALLS - MN VALLEY TAP 230KV CKT 1	258.8	0.05049	102.7604	GRANITE FALLS - MN VALLEY TAP 230KV CKT 1
20L	16ALL	0	FROM->TO	G17_109	GRANITE FALLS - MN VALLEY TAP 230KV CKT 1	257.8	0.04637	103.1777	GRANITE FALLS - MN VALLEY TAP 230KV CKT 1
25SP	16ALL	0	FROM->TO	G17_109	HESKETT - WISHEK 230KV CKT 1	256.4	0.07448	101.7831	BUFFALO - JAMESTOWN 345KV CKT 1
25SP	16ALL	0	FROM->TO	G17_109	HESKETT (HESKETT TR1) 230/115/13.8KV TRANSFORMER CKT 1	124.3	0.04718	115.0957	HESKETT - MANDAN 4 230.00 230KV CKT 1
25SP	16ALL	0	FROM->TO	G17_109	HESKETT (HESKETT TR1) 230/115/13.8KV TRANSFORMER CKT 1	124.2	0.04718	115.1884	HESKETT - MANDAN 4 230.00 230KV CKT 1
20SP	16ALL	0	FROM->TO	G17_109	HESKETT (HESKETT TR1) 230/115/13.8KV TRANSFORMER CKT 1	124.4	0.04703	104.9871	HESKETT - MANDAN 4 230.00 230KV CKT 1
20SP	16ALL	0	FROM->TO	G17_109	HESKETT (HESKETT TR1) 230/115/13.8KV TRANSFORMER CKT 1	124.3	0.04703	105.0716	HESKETT - MANDAN 4 230.00 230KV CKT 1
17SP	16ALL	0	FROM->TO	G17_109	HURON (BD KU2A) 345/230/13.8KV TRANSFORMER CKT 1	394.5	0.1489	126.6281	G16-017-TAP 345.00 - LELAND2-LNX3345.00 345KV CKT 1
17SP	16ALL	0	FROM->TO	G17_109	HURON (BD KU2A) 345/230/13.8KV TRANSFORMER CKT 1	394.5	0.1489	127.3886	LELAND OLDS - LELAND2-LNX3345.00 345KV CKT Z
17SP	16ALL	0	FROM->TO	G17_109	HURON (BD KU2A) 345/230/13.8KV TRANSFORMER CKT 1	394.5	0.1489	127.7435	P12:345:UMZB:# 108 #: LOS FT IN ND. LOS FT
17SP	16ALL	0	FROM->TO	G17_109	HURON (BD KU2A) 345/230/13.8KV TRANSFORMER CKT 1	394.5	0.1489	129.2644	FT THOMPSON - FTTHOM1-LNX3345.00 345KV CKT Z
17SP	16ALL	0	FROM->TO	G17_109	HURON (BD KU2A) 345/230/13.8KV TRANSFORMER CKT 1	394.5	0.1489	129.2644	FTTHOM1-LNX3345.00 - G16-017-TAP 345.00 345KV CKT 1
17SP	16ALL	0	FROM->TO	G17_109	HURON (BD KU2A) 345/230/13.8KV TRANSFORMER CKT 1	384.1	0.1489	129.9005	G16-017-TAP 345.00 - LELAND2-LNX3345.00 345KV CKT 1
17SP	16ALL	0	FROM->TO	G17_109	HURON (BD KU2A) 345/230/13.8KV TRANSFORMER CKT 1	384.1	0.1489	130.6816	LELAND OLDS - LELAND2-LNX3345.00 345KV CKT Z
17SP	16ALL	0	FROM->TO	G17_109	HURON (BD KU2A) 345/230/13.8KV TRANSFORMER CKT 1	384.1	0.1489	131.0461	P12:345:UMZB:# 108 #: LOS FT IN ND. LOS FT
17SP	16ALL	0	FROM->TO	G17_109	HURON (BD KU2A) 345/230/13.8KV TRANSFORMER CKT 1	384.1	0.1489	132.6082	FT THOMPSON - FTTHOM1-LNX3345.00 345KV CKT Z
17SP	16ALL	0	FROM->TO	G17_109	HURON (BD KU2A) 345/230/13.8KV TRANSFORMER CKT 1	384.1	0.1489	132.6082	FTTHOM1-LNX3345.00 - G16-017-TAP 345.00 345KV CKT 1
16WP	16ALL	0	FROM->TO	G17_109	HURON (BD KU2A) 345/230/13.8KV TRANSFORMER CKT 1	397.6	0.14756	106.5624	G16-017-TAP 345.00 - LELAND2-LNX3345.00 345KV CKT 1
16WP	16ALL	0	FROM->TO	G17_109	HURON (BD KU2A) 345/230/13.8KV TRANSFORMER CKT 1	397.6	0.14756	106.9648	LELAND OLDS - LELAND2-LNX3345.00 345KV CKT Z
16WP	16ALL	0	FROM->TO	G17_109	HURON (BD KU2A) 345/230/13.8KV TRANSFORMER CKT 1	397.6	0.14756	107.3924	P12:345:UMZB:# 108 #: LOS FT IN ND. LOS FT
16WP	16ALL	0	FROM->TO	G17_109	HURON (BD KU2A) 345/230/13.8KV TRANSFORMER CKT 1	397.6	0.14756	109.2284	FTTHOM1-LNX3345.00 - G16-017-TAP 345.00 345KV CKT 1
16WP	16ALL	0	FROM->TO	G17_109	HURON (BD KU2A) 345/230/13.8KV TRANSFORMER CKT 1	397.6	0.14756	109.2284	FT THOMPSON - FTTHOM1-LNX3345.00 345KV CKT Z

SEASON	GROUP	SCENARIO	DIRECTION	SOURCE	MONITORED ELEMENT	RATE (MVA)	TDF	CONTINGENCY LOADING %	CONTINGENCY
16WP	16ALL	0	FROM->TO	G17_109	HURON (BD KU2A) 345/230/13.8KV TRANSFORMER CKT 1	393.1	0.14756	107.6805	G16-017-TAP 345.00 - LELAND2-LNX3345.00 345KV CKT 1
16WP	16ALL	0	FROM->TO	G17_109	HURON (BD KU2A) 345/230/13.8KV TRANSFORMER CKT 1	393.1	0.14756	108.0875	LELAND OLDS - LELAND2-LNX3345.00 345KV CKT Z
16WP	16ALL	0	FROM->TO	G17_109	HURON (BD KU2A) 345/230/13.8KV TRANSFORMER CKT 1	393.1	0.14756	108.52	P12:345:UMZB:# 108 #: LOS FT IN ND. LOS FT
16WP	16ALL	0	FROM->TO	G17_109	HURON (BD KU2A) 345/230/13.8KV TRANSFORMER CKT 1	393.1	0.14756	110.3516	FTTHOM1-LNX3345.00 - G16-017-TAP 345.00 345KV CKT 1
16WP	16ALL	0	FROM->TO	G17_109	HURON (BD KU2A) 345/230/13.8KV TRANSFORMER CKT 1	393.1	0.14756	110.3516	FT THOMPSON - FTTHOM1-LNX3345.00 345KV CKT Z
17SP	16ALL	0	FROM->TO	G17_109	HURON (BD KU2A) 345/230/13.8KV TRANSFORMER CKT 1	394.5	0.14721	114.1414	BISON - HETINGER 230KV CKT 1
25SP	16ALL	0	FROM->TO	G17_109	HURON (BD KU2A) 345/230/13.8KV TRANSFORMER CKT 1	395	0.14585	122.6177	G16-017-TAP 345.00 - LELAND2-LNX3345.00 345KV CKT 1
25SP	16ALL	0	FROM->TO	G17_109	HURON (BD KU2A) 345/230/13.8KV TRANSFORMER CKT 1	395	0.14585	123.3266	LELAND OLDS - LELAND2-LNX3345.00 345KV CKT Z
25SP	16ALL	0	FROM->TO	G17_109	HURON (BD KU2A) 345/230/13.8KV TRANSFORMER CKT 1	395	0.14585	123.681	P12:345:UMZB:# 108 #: LOS FT IN ND. LOS FT
25SP	16ALL	0	FROM->TO	G17_109	HURON (BD KU2A) 345/230/13.8KV TRANSFORMER CKT 1	395	0.14585	125.2	FTTHOM1-LNX3345.00 - G16-017-TAP 345.00 345KV CKT 1
25SP	16ALL	0	FROM->TO	G17_109	HURON (BD KU2A) 345/230/13.8KV TRANSFORMER CKT 1	395	0.14585	125.2	FT THOMPSON - FTTHOM1-LNX3345.00 345KV CKT Z
25SP	16ALL	0	FROM->TO	G17_109	HURON (BD KU2A) 345/230/13.8KV TRANSFORMER CKT 1	386.2	0.14585	125.2822	G16-017-TAP 345.00 - LELAND2-LNX3345.00 345KV CKT 1
25SP	16ALL	0	FROM->TO	G17_109	HURON (BD KU2A) 345/230/13.8KV TRANSFORMER CKT 1	386.2	0.14585	126.0072	LELAND OLDS - LELAND2-LNX3345.00 345KV CKT Z
25SP	16ALL	0	FROM->TO	G17_109	HURON (BD KU2A) 345/230/13.8KV TRANSFORMER CKT 1	386.2	0.14585	126.3439	P12:345:UMZB:# 108 #: LOS FT IN ND. LOS FT
25SP	16ALL	0	FROM->TO	G17_109	HURON (BD KU2A) 345/230/13.8KV TRANSFORMER CKT 1	386.2	0.14585	127.8975	FTTHOM1-LNX3345.00 - G16-017-TAP 345.00 345KV CKT 1
25SP	16ALL	0	FROM->TO	G17_109	HURON (BD KU2A) 345/230/13.8KV TRANSFORMER CKT 1	386.2	0.14585	127.8975	FT THOMPSON - FTTHOM1-LNX3345.00 345KV CKT Z
20SP	16ALL	0	FROM->TO	G17_109	HURON (BD KU2A) 345/230/13.8KV TRANSFORMER CKT 1	395.5	0.14553	119.5449	G16-017-TAP 345.00 - LELAND2-LNX3345.00 345KV CKT 1
20SP	16ALL	0	FROM->TO	G17_109	HURON (BD KU2A) 345/230/13.8KV TRANSFORMER CKT 1	395.5	0.14553	120.2023	LELAND OLDS - LELAND2-LNX3345.00 345KV CKT Z
20SP	16ALL	0	FROM->TO	G17_109	HURON (BD KU2A) 345/230/13.8KV TRANSFORMER CKT 1	395.5	0.14553	120.5563	P12:345:UMZB:# 108 #: LOS FT IN ND. LOS FT
20SP	16ALL	0	FROM->TO	G17_109	HURON (BD KU2A) 345/230/13.8KV TRANSFORMER CKT 1	395.5	0.14553	122.1239	FT THOMPSON - FTTHOM1-LNX3345.00 345KV CKT Z
20SP	16ALL	0	FROM->TO	G17_109	HURON (BD KU2A) 345/230/13.8KV TRANSFORMER CKT 1	395.5	0.14553	122.1239	FTTHOM1-LNX3345.00 - G16-017-TAP 345.00 345KV CKT 1
20SP	16ALL	0	FROM->TO	G17_109	HURON (BD KU2A) 345/230/13.8KV TRANSFORMER CKT 1	387.8	0.14553	121.7896	G16-017-TAP 345.00 - LELAND2-LNX3345.00 345KV CKT 1
20SP	16ALL	0	FROM->TO	G17_109	HURON (BD KU2A) 345/230/13.8KV TRANSFORMER CKT 1	387.8	0.14553	122.46	LELAND OLDS - LELAND2-LNX3345.00 345KV CKT Z
20SP	16ALL	0	FROM->TO	G17_109	HURON (BD KU2A) 345/230/13.8KV TRANSFORMER CKT 1	387.8	0.14553	122.821	P12:345:UMZB:# 108 #: LOS FT IN ND. LOS FT
20SP	16ALL	0	FROM->TO	G17_109	HURON (BD KU2A) 345/230/13.8KV TRANSFORMER CKT 1	387.8	0.14553	124.394	FT THOMPSON - FTTHOM1-LNX3345.00 345KV CKT Z
20SP	16ALL	0	FROM->TO	G17_109	HURON (BD KU2A) 345/230/13.8KV TRANSFORMER CKT 1	387.8	0.14553	124.394	FTTHOM1-LNX3345.00 - G16-017-TAP 345.00 345KV CKT 1
17G	16ALL	0	FROM->TO	G17_109	HURON (BD KU2A) 345/230/13.8KV TRANSFORMER CKT 1	395.3	0.14536	119.1075	G16-017-TAP 345.00 - LELAND2-LNX3345.00 345KV CKT 1
17G	16ALL	0	FROM->TO	G17_109	HURON (BD KU2A) 345/230/13.8KV TRANSFORMER CKT 1	395.3	0.14536	119.74	LELAND OLDS - LELAND2-LNX3345.00 345KV CKT Z
17G	16ALL	0	FROM->TO	G17_109	HURON (BD KU2A) 345/230/13.8KV TRANSFORMER CKT 1	395.3	0.14536	120.1194	P12:345:UMZB:# 108 #: LOS FT IN ND. LOS FT
17G	16ALL	0	FROM->TO	G17_109	HURON (BD KU2A) 345/230/13.8KV TRANSFORMER CKT 1	395.3	0.14536	121.7384	FTTHOM1-LNX3345.00 - G16-017-TAP 345.00 345KV CKT 1
17G	16ALL	0	FROM->TO	G17_109	HURON (BD KU2A) 345/230/13.8KV TRANSFORMER CKT 1	395.3	0.14536	121.7384	FT THOMPSON - FTTHOM1-LNX3345.00 345KV CKT Z
17G	16ALL	0	FROM->TO	G17_109	HURON (BD KU2A) 345/230/13.8KV TRANSFORMER CKT 1	387.4	0.14536	121.4073	G16-017-TAP 345.00 - LELAND2-LNX3345.00 345KV CKT 1
17G	16ALL	0	FROM->TO	G17_109	HURON (BD KU2A) 345/230/13.8KV TRANSFORMER CKT 1	387.4	0.14536	122.0527	LELAND OLDS - LELAND2-LNX3345.00 345KV CKT Z
17G	16ALL	0	FROM->TO	G17_109	HURON (BD KU2A) 345/230/13.8KV TRANSFORMER CKT 1	387.4	0.14536	122.4399	P12:345:UMZB:# 108 #: LOS FT IN ND. LOS FT
17G	16ALL	0	FROM->TO	G17_109	HURON (BD KU2A) 345/230/13.8KV TRANSFORMER CKT 1	387.4	0.14536	124.0919	FTTHOM1-LNX3345.00 - G16-017-TAP 345.00 345KV CKT 1
17G	16ALL	0	FROM->TO	G17_109	HURON (BD KU2A) 345/230/13.8KV TRANSFORMER CKT 1	387.4	0.14536	124.0919	FT THOMPSON - FTTHOM1-LNX3345.00 345KV CKT Z
25SP	16ALL	0	FROM->TO	G17_109	HURON (BD KU2A) 345/230/13.8KV TRANSFORMER CKT 1	395	0.14437	109.3752	BISON - MAURINE 230KV CKT 1
25SP	16ALL	0	FROM->TO	G17_109	HURON (BD KU2A) 345/230/13.8KV TRANSFORMER CKT 1	395	0.14437	110.641	BISON - HETINGER 230KV CKT 1
25SP	16ALL	0	FROM->TO	G17_109	HURON (BD KU2A) 345/230/13.8KV TRANSFORMER CKT 1	386.2	0.14437	113.0067	BISON - HETINGER 230KV CKT 1
17G	16ALL	0	FROM->TO	G17_109	HURON (BD KU2A) 345/230/13.8KV TRANSFORMER CKT 1	395.3	0.14422	106.1209	BISON - MAURINE 230KV CKT 1
17G	16ALL	0	FROM->TO	G17_109	HURON (BD KU2A) 345/230/13.8KV TRANSFORMER CKT 1	395.3	0.14422	106.6522	BISON - HETINGER 230KV CKT 1
17G	16ALL	0	FROM->TO	G17_109	HURON (BD KU2A) 345/230/13.8KV TRANSFORMER CKT 1	387.4	0.14422	108.1559	BISON - MAURINE 230KV CKT 1
17G	16ALL	0	FROM->TO	G17_109	HURON (BD KU2A) 345/230/13.8KV TRANSFORMER CKT 1	387.4	0.14422	108.6722	BISON - HETINGER 230KV CKT 1
20SP	16ALL	0	FROM->TO	G17_109	HURON (BD KU2A) 345/230/13.8KV TRANSFORMER CKT 1	395.5	0.14399	106.5689	BISON - MAURINE 230KV CKT 1
20SP	16ALL	0	FROM->TO	G17_109	HURON (BD KU2A) 345/230/13.8KV TRANSFORMER CKT 1	395.5	0.14399	107.7826	BISON - HETINGER 230KV CKT 1
20SP	16ALL	0	FROM->TO	G17_109	HURON (BD KU2A) 345/230/13.8KV TRANSFORMER CKT 1	387.8	0.14399	108.556	BISON - MAURINE 230KV CKT 1
20SP	16ALL	0	FROM->TO	G17_109	HURON (BD KU2A) 345/230/13.8KV TRANSFORMER CKT 1	387.8	0.14399	109.7937	BISON - HETINGER 230KV CKT 1
17SP	16ALL	0	FROM->TO	G17_109	HURON (BD KU2A) 345/230/13.8KV TRANSFORMER CKT 1	394.5	0.14305	126.1962	GROTON - GROTON-LNX3 345.00 345KV CKT Z
17SP	16ALL	0	FROM->TO	G17_109	HURON (BD KU2A) 345/230/13.8KV TRANSFORMER CKT 1	394.5	0.14305	126.1962	GROTON-LNX3 345.00 - LELAND1-LNX3345.00 345KV CKT 1
17SP	16ALL	0	FROM->TO	G17_109	HURON (BD KU2A) 345/230/13.8KV TRANSFORMER CKT 1	394.5	0.14305	126.9313	P12:345:UMZB:# 109 #: LOS GRT IN ND. LOS GRT
17SP	16ALL	0	FROM->TO	G17_109	HURON (BD KU2A) 345/230/13.8KV TRANSFORMER CKT 1	394.5	0.14305	127.0581	LELAND OLDS - LELAND1-LNX3345.00 345KV CKT Z
17SP	16ALL	0	FROM->TO	G17_109	HURON (BD KU2A) 345/230/13.8KV TRANSFORMER CKT 1	384.1	0.14305	129.4569	GROTON - GROTON-LNX3 345.00 345KV CKT Z
17SP	16ALL	0	FROM->TO	G17_109	HURON (BD KU2A) 345/230/13.8KV TRANSFORMER CKT 1	384.1	0.14305	129.4569	GROTON-LNX3 345.00 - LELAND1-LNX3345.00 345KV CKT 1
17SP	16ALL	0	FROM->TO	G17_109	HURON (BD KU2A) 345/230/13.8KV TRANSFORMER CKT 1	384.1	0.14305	130.2119	P12:345:UMZB:# 109 #: LOS GRT IN ND. LOS GRT
17SP	16ALL	0	FROM->TO	G17_109	HURON (BD KU2A) 345/230/13.8KV TRANSFORMER CKT 1	384.1	0.14305	130.3421	LELAND OLDS - LELAND1-LNX3345.00 345KV CKT Z

SEASON	GROUP	SCENARIO	DIRECTION	SOURCE	MONITORED ELEMENT	RATE (MVA)	TDF	CONTINGENCY LOADING %	CONTINGENCY
16WP	16ALL	0	FROM->TO	G17_109	HURON (BD KU2A) 345/230/13.8KV TRANSFORMER CKT 1	397.6	0.14154	108.9879	GROTON-LNX3 345.00 - LELAND1-LNX3345.00 345KV CKT 1
16WP	16ALL	0	FROM->TO	G17_109	HURON (BD KU2A) 345/230/13.8KV TRANSFORMER CKT 1	397.6	0.14154	108.9879	GROTON - GROTON-LNX3 345.00 345KV CKT Z
16WP	16ALL	0	FROM->TO	G17_109	HURON (BD KU2A) 345/230/13.8KV TRANSFORMER CKT 1	397.6	0.14154	109.5664	P12:345:UMZB:# 109 #: LOS GRT IN ND. LOS GRT
16WP	16ALL	0	FROM->TO	G17_109	HURON (BD KU2A) 345/230/13.8KV TRANSFORMER CKT 1	397.6	0.14154	109.667	LELAND OLDS - LELAND1-LNX3345.00 345KV CKT Z
16WP	16ALL	0	FROM->TO	G17_109	HURON (BD KU2A) 345/230/13.8KV TRANSFORMER CKT 1	393.1	0.14154	110.1338	GROTON-LNX3 345.00 - LELAND1-LNX3345.00 345KV CKT 1
16WP	16ALL	0	FROM->TO	G17_109	HURON (BD KU2A) 345/230/13.8KV TRANSFORMER CKT 1	393.1	0.14154	110.1338	GROTON - GROTON-LNX3 345.00 345KV CKT Z
16WP	16ALL	0	FROM->TO	G17_109	HURON (BD KU2A) 345/230/13.8KV TRANSFORMER CKT 1	393.1	0.14154	110.7189	P12:345:UMZB:# 109 #: LOS GRT IN ND. LOS GRT
16WP	16ALL	0	FROM->TO	G17_109	HURON (BD KU2A) 345/230/13.8KV TRANSFORMER CKT 1	393.1	0.14154	110.8207	LELAND OLDS - LELAND1-LNX3345.00 345KV CKT Z
25SP	16ALL	0	FROM->TO	G17_109	HURON (BD KU2A) 345/230/13.8KV TRANSFORMER CKT 1	395	0.14004	121.2527	GROTON-LNX3 345.00 - LELAND1-LNX3345.00 345KV CKT 1
25SP	16ALL	0	FROM->TO	G17_109	HURON (BD KU2A) 345/230/13.8KV TRANSFORMER CKT 1	395	0.14004	121.2527	GROTON - GROTON-LNX3 345.00 345KV CKT Z
25SP	16ALL	0	FROM->TO	G17_109	HURON (BD KU2A) 345/230/13.8KV TRANSFORMER CKT 1	395	0.14004	121.8603	P12:345:UMZB:# 109 #: LOS GRT IN ND. LOS GRT
25SP	16ALL	0	FROM->TO	G17_109	HURON (BD KU2A) 345/230/13.8KV TRANSFORMER CKT 1	395	0.14004	121.9615	LELAND OLDS - LELAND1-LNX3345.00 345KV CKT Z
25SP	16ALL	0	FROM->TO	G17_109	HURON (BD KU2A) 345/230/13.8KV TRANSFORMER CKT 1	386.2	0.14004	123.8602	GROTON - GROTON-LNX3 345.00 345KV CKT Z
25SP	16ALL	0	FROM->TO	G17_109	HURON (BD KU2A) 345/230/13.8KV TRANSFORMER CKT 1	386.2	0.14004	123.8602	GROTON-LNX3 345.00 - LELAND1-LNX3345.00 345KV CKT 1
25SP	16ALL	0	FROM->TO	G17_109	HURON (BD KU2A) 345/230/13.8KV TRANSFORMER CKT 1	386.2	0.14004	124.4816	P12:345:UMZB:# 109 #: LOS GRT IN ND. LOS GRT
25SP	16ALL	0	FROM->TO	G17_109	HURON (BD KU2A) 345/230/13.8KV TRANSFORMER CKT 1	386.2	0.14004	124.5852	LELAND OLDS - LELAND1-LNX3345.00 345KV CKT Z
17G	16ALL	0	FROM->TO	G17_109	HURON (BD KU2A) 345/230/13.8KV TRANSFORMER CKT 1	395.3	0.13973	119.3069	GROTON-LNX3 345.00 - LELAND1-LNX3345.00 345KV CKT 1
17G	16ALL	0	FROM->TO	G17_109	HURON (BD KU2A) 345/230/13.8KV TRANSFORMER CKT 1	395.3	0.13973	119.3069	GROTON - GROTON-LNX3 345.00 345KV CKT Z
17G	16ALL	0	FROM->TO	G17_109	HURON (BD KU2A) 345/230/13.8KV TRANSFORMER CKT 1	395.3	0.13973	119.9899	P12:345:UMZB:# 109 #: LOS GRT IN ND. LOS GRT
17G	16ALL	0	FROM->TO	G17_109	HURON (BD KU2A) 345/230/13.8KV TRANSFORMER CKT 1	395.3	0.13973	120.1164	LELAND OLDS - LELAND1-LNX3345.00 345KV CKT Z
17G	16ALL	0	FROM->TO	G17_109	HURON (BD KU2A) 345/230/13.8KV TRANSFORMER CKT 1	387.4	0.13973	121.6107	GROTON - GROTON-LNX3 345.00 345KV CKT Z
17G	16ALL	0	FROM->TO	G17_109	HURON (BD KU2A) 345/230/13.8KV TRANSFORMER CKT 1	387.4	0.13973	121.6107	GROTON-LNX3 345.00 - LELAND1-LNX3345.00 345KV CKT 1
17G	16ALL	0	FROM->TO	G17_109	HURON (BD KU2A) 345/230/13.8KV TRANSFORMER CKT 1	387.4	0.13973	122.3077	P12:345:UMZB:# 109 #: LOS GRT IN ND. LOS GRT
17G	16ALL	0	FROM->TO	G17_109	HURON (BD KU2A) 345/230/13.8KV TRANSFORMER CKT 1	387.4	0.13973	122.4109	LELAND OLDS - LELAND1-LNX3345.00 345KV CKT Z
20SP	16ALL	0	FROM->TO	G17_109	HURON (BD KU2A) 345/230/13.8KV TRANSFORMER CKT 1	395.5	0.13969	118.2544	GROTON-LNX3 345.00 - LELAND1-LNX3345.00 345KV CKT 1
20SP	16ALL	0	FROM->TO	G17_109	HURON (BD KU2A) 345/230/13.8KV TRANSFORMER CKT 1	395.5	0.13969	118.2544	GROTON - GROTON-LNX3 345.00 345KV CKT Z
20SP	16ALL	0	FROM->TO	G17_109	HURON (BD KU2A) 345/230/13.8KV TRANSFORMER CKT 1	395.5	0.13969	118.8359	P12:345:UMZB:# 109 #: LOS GRT IN ND. LOS GRT
20SP	16ALL	0	FROM->TO	G17_109	HURON (BD KU2A) 345/230/13.8KV TRANSFORMER CKT 1	395.5	0.13969	118.9118	LELAND OLDS - LELAND1-LNX3345.00 345KV CKT Z
20SP	16ALL	0	FROM->TO	G17_109	HURON (BD KU2A) 345/230/13.8KV TRANSFORMER CKT 1	387.8	0.13969	120.4734	GROTON - GROTON-LNX3 345.00 345KV CKT Z
20SP	16ALL	0	FROM->TO	G17_109	HURON (BD KU2A) 345/230/13.8KV TRANSFORMER CKT 1	387.8	0.13969	120.4734	GROTON-LNX3 345.00 - LELAND1-LNX3345.00 345KV CKT 1
20SP	16ALL	0	FROM->TO	G17_109	HURON (BD KU2A) 345/230/13.8KV TRANSFORMER CKT 1	387.8	0.13969	121.0407	P12:345:UMZB:# 109 #: LOS GRT IN ND. LOS GRT
20SP	16ALL	0	FROM->TO	G17_109	HURON (BD KU2A) 345/230/13.8KV TRANSFORMER CKT 1	387.8	0.13969	121.1439	LELAND OLDS - LELAND1-LNX3345.00 345KV CKT Z
20L	16ALL	0	FROM->TO	G17_109	HURON (BD KU2A) 345/230/13.8KV TRANSFORMER CKT 1	397.8	0.13521	106.9814	G16-017-TAP 345.00 - LELAND2-LNX3345.00 345KV CKT 1
20L	16ALL	0	FROM->TO	G17_109	HURON (BD KU2A) 345/230/13.8KV TRANSFORMER CKT 1	397.8	0.13521	107.5596	LELAND OLDS - LELAND2-LNX3345.00 345KV CKT Z
20L	16ALL	0	FROM->TO	G17_109	HURON (BD KU2A) 345/230/13.8KV TRANSFORMER CKT 1	397.8	0.13521	107.9367	P12:345:UMZB:# 108 #: LOS FT IN ND. LOS FT
20L	16ALL	0	FROM->TO	G17_109	HURON (BD KU2A) 345/230/13.8KV TRANSFORMER CKT 1	397.8	0.13521	109.5706	FT THOMPSON - FTTHOM1-LNX3345.00 345KV CKT Z
20L	16ALL	0	FROM->TO	G17_109	HURON (BD KU2A) 345/230/13.8KV TRANSFORMER CKT 1	397.8	0.13521	109.5706	FTTHOM1-LNX3345.00 - G16-017-TAP 345.00 345KV CKT 1
20L	16ALL	0	FROM->TO	G17_109	HURON (BD KU2A) 345/230/13.8KV TRANSFORMER CKT 1	393.7	0.13521	107.9939	G16-017-TAP 345.00 - LELAND2-LNX3345.00 345KV CKT 1
20L	16ALL	0	FROM->TO	G17_109	HURON (BD KU2A) 345/230/13.8KV TRANSFORMER CKT 1	393.7	0.13521	108.5781	LELAND OLDS - LELAND2-LNX3345.00 345KV CKT Z
20L	16ALL	0	FROM->TO	G17_109	HURON (BD KU2A) 345/230/13.8KV TRANSFORMER CKT 1	393.7	0.13521	108.9591	P12:345:UMZB:# 108 #: LOS FT IN ND. LOS FT
20L	16ALL	0	FROM->TO	G17_109	HURON (BD KU2A) 345/230/13.8KV TRANSFORMER CKT 1	393.7	0.13521	110.6101	FT THOMPSON - FTTHOM1-LNX3345.00 345KV CKT Z
20L	16ALL	0	FROM->TO	G17_109	HURON (BD KU2A) 345/230/13.8KV TRANSFORMER CKT 1	393.7	0.13521	110.6101	FTTHOM1-LNX3345.00 - G16-017-TAP 345.00 345KV CKT 1
17SP	16ALL	0	FROM->TO	G17_109	HURON (BD KU2A) 345/230/13.8KV TRANSFORMER CKT 1	394.5	0.13117	116.2241	G09_001IST 345.00 - GROTON 345KV CKT 1
17SP	16ALL	0	FROM->TO	G17_109	HURON (BD KU2A) 345/230/13.8KV TRANSFORMER CKT 1	394.5	0.13117	117.0606	G09_001IST 345.00 - WATERTOWN 345KV CKT 1
17SP	16ALL	0	FROM->TO	G17_109	HURON (BD KU2A) 345/230/13.8KV TRANSFORMER CKT 1	384.1	0.13117	119.2148	G09_001IST 345.00 - GROTON 345KV CKT 1
17SP	16ALL	0	FROM->TO	G17_109	HURON (BD KU2A) 345/230/13.8KV TRANSFORMER CKT 1	384.1	0.13117	120.0479	G09_001IST 345.00 - WATERTOWN 345KV CKT 1
20L	16ALL	0	FROM->TO	G17_109	HURON (BD KU2A) 345/230/13.8KV TRANSFORMER CKT 1	397.8	0.12951	103.5757	GROTON - GROTON-LNX3 345.00 345KV CKT Z
20L	16ALL	0	FROM->TO	G17_109	HURON (BD KU2A) 345/230/13.8KV TRANSFORMER CKT 1	397.8	0.12951	103.5757	GROTON-LNX3 345.00 - LELAND1-LNX3345.00 345KV CKT 1
20L	16ALL	0	FROM->TO	G17_109	HURON (BD KU2A) 345/230/13.8KV TRANSFORMER CKT 1	397.8	0.12951	103.9276	P12:345:UMZB:# 109 #: LOS GRT IN ND. LOS GRT
20L	16ALL	0	FROM->TO	G17_109	HURON (BD KU2A) 345/230/13.8KV TRANSFORMER CKT 1	397.8	0.12951	104.003	LELAND OLDS - LELAND1-LNX3345.00 345KV CKT Z
20L	16ALL	0	FROM->TO	G17_109	HURON (BD KU2A) 345/230/13.8KV TRANSFORMER CKT 1	393.7	0.12951	104.5527	GROTON - GROTON-LNX3 345.00 345KV CKT Z
20L	16ALL	0	FROM->TO	G17_109	HURON (BD KU2A) 345/230/13.8KV TRANSFORMER CKT 1	393.7	0.12951	104.5527	GROTON-LNX3 345.00 - LELAND1-LNX3345.00 345KV CKT 1
20L	16ALL	0	FROM->TO	G17_109	HURON (BD KU2A) 345/230/13.8KV TRANSFORMER CKT 1	393.7	0.12951	104.9083	P12:345:UMZB:# 109 #: LOS GRT IN ND. LOS GRT
20L	16ALL	0	FROM->TO	G17_109	HURON (BD KU2A) 345/230/13.8KV TRANSFORMER CKT 1	393.7	0.12951	104.9845	LELAND OLDS - LELAND1-LNX3345.00 345KV CKT Z
17G	16ALL	0	FROM->TO	G17_109	HURON (BD KU2A) 345/230/13.8KV TRANSFORMER CKT 1	395.3	0.12823	108.001	G09_001IST 345.00 - GROTON 345KV CKT 1

SEASON	GROUP	SCENARIO	DIRECTION	SOURCE	MONITORED ELEMENT	RATE (MVA)	TDF	CONTINGENCY LOADING %	CONTINGENCY
17G	16ALL	0	FROM->TO	G17_109	HURON (BD KU2A) 345/230/13.8KV TRANSFORMER CKT 1	395.3	0.12823	108.8611	G09_001IST 345.00 - WATERTOWN 345KV CKT 1
17G	16ALL	0	FROM->TO	G17_109	HURON (BD KU2A) 345/230/13.8KV TRANSFORMER CKT 1	387.4	0.12823	110.0743	G09_001IST 345.00 - GROTON 345KV CKT 1
17G	16ALL	0	FROM->TO	G17_109	HURON (BD KU2A) 345/230/13.8KV TRANSFORMER CKT 1	387.4	0.12823	110.952	G09_001IST 345.00 - WATERTOWN 345KV CKT 1
25SP	16ALL	0	FROM->TO	G17_109	HURON (BD KU2A) 345/230/13.8KV TRANSFORMER CKT 1	395	0.12744	110.2967	G09_001IST 345.00 - GROTON 345KV CKT 1
25SP	16ALL	0	FROM->TO	G17_109	HURON (BD KU2A) 345/230/13.8KV TRANSFORMER CKT 1	395	0.12744	111.0815	G09_001IST 345.00 - WATERTOWN 345KV CKT 1
25SP	16ALL	0	FROM->TO	G17_109	HURON (BD KU2A) 345/230/13.8KV TRANSFORMER CKT 1	386.2	0.12744	112.6546	G09_001IST 345.00 - GROTON 345KV CKT 1
25SP	16ALL	0	FROM->TO	G17_109	HURON (BD KU2A) 345/230/13.8KV TRANSFORMER CKT 1	386.2	0.12744	113.4573	G09_001IST 345.00 - WATERTOWN 345KV CKT 1
17SP	16ALL	0	FROM->TO	G17_109	HURON (BD KU2A) 345/230/13.8KV TRANSFORMER CKT 1	394.5	0.1273	112.8497	CENTER - JAMESTOWN 345KV CKT 1
17SP	16ALL	0	FROM->TO	G17_109	HURON (BD KU2A) 345/230/13.8KV TRANSFORMER CKT 1	384.1	0.1273	115.749	CENTER - JAMESTOWN 345KV CKT 1
17SP	16ALL	0	FROM->TO	G17_109	HURON (BD KU2A) 345/230/13.8KV TRANSFORMER CKT 1	394.5	0.12717	115.8053	BUFFALO - JAMESTOWN 345KV CKT 1
17SP	16ALL	0	FROM->TO	G17_109	HURON (BD KU2A) 345/230/13.8KV TRANSFORMER CKT 1	384.1	0.12717	118.7847	BUFFALO - JAMESTOWN 345KV CKT 1
20SP	16ALL	0	FROM->TO	G17_109	HURON (BD KU2A) 345/230/13.8KV TRANSFORMER CKT 1	395.5	0.12712	107.6956	G09_001IST 345.00 - GROTON 345KV CKT 1
20SP	16ALL	0	FROM->TO	G17_109	HURON (BD KU2A) 345/230/13.8KV TRANSFORMER CKT 1	395.5	0.12712	108.4794	G09_001IST 345.00 - WATERTOWN 345KV CKT 1
20SP	16ALL	0	FROM->TO	G17_109	HURON (BD KU2A) 345/230/13.8KV TRANSFORMER CKT 1	387.8	0.12712	109.705	G09_001IST 345.00 - GROTON 345KV CKT 1
20SP	16ALL	0	FROM->TO	G17_109	HURON (BD KU2A) 345/230/13.8KV TRANSFORMER CKT 1	387.8	0.12712	110.5044	G09_001IST 345.00 - WATERTOWN 345KV CKT 1
16WP	16ALL	0	FROM->TO	G17_109	HURON (BD KU2A) 345/230/13.8KV TRANSFORMER CKT 1	393.1	0.12591	100.8497	BUFFALO - JAMESTOWN 345KV CKT 1
17SP	16ALL	0	FROM->TO	G17_109	HURON (BD KU2A) 345/230/13.8KV TRANSFORMER CKT 1	394.5	0.12563	123.1848	FORBES - ROSEAU 500KV CKT 1
17SP	16ALL	0	FROM->TO	G17_109	HURON (BD KU2A) 345/230/13.8KV TRANSFORMER CKT 1	394.5	0.12563	123.6664	ROSEAU - ROSEAUM 2 500.00 500KV CKT 1
17SP	16ALL	0	FROM->TO	G17_109	HURON (BD KU2A) 345/230/13.8KV TRANSFORMER CKT 1	394.5	0.12563	123.6664	ROSEAU - ROSEAUM 2 500.00 500KV CKT 1
17SP	16ALL	0	FROM->TO	G17_109	HURON (BD KU2A) 345/230/13.8KV TRANSFORMER CKT 1	394.5	0.12563	124.148	RIEL - ROSEAU 500KV CKT 1
17SP	16ALL	0	FROM->TO	G17_109	HURON (BD KU2A) 345/230/13.8KV TRANSFORMER CKT 1	384.1	0.12563	126.364	FORBES - ROSEAU 500KV CKT 1
17SP	16ALL	0	FROM->TO	G17_109	HURON (BD KU2A) 345/230/13.8KV TRANSFORMER CKT 1	384.1	0.12563	126.8586	ROSEAU - ROSEAUM 2 500.00 500KV CKT 1
17SP	16ALL	0	FROM->TO	G17_109	HURON (BD KU2A) 345/230/13.8KV TRANSFORMER CKT 1	384.1	0.12563	126.8586	ROSEAU - ROSEAUM 2 500.00 500KV CKT 1
17SP	16ALL	0	FROM->TO	G17_109	HURON (BD KU2A) 345/230/13.8KV TRANSFORMER CKT 1	384.1	0.12563	127.3533	RIEL - ROSEAU 500KV CKT 1
17SP	16ALL	0	FROM->TO	G17_109	HURON (BD KU2A) 345/230/13.8KV TRANSFORMER CKT 1	394.5	0.12532	111.7303	BISON 3 345.00 - BUFFALO 345KV CKT 1
17SP	16ALL	0	FROM->TO	G17_109	HURON (BD KU2A) 345/230/13.8KV TRANSFORMER CKT 1	384.1	0.12532	114.5993	BISON 3 345.00 - BUFFALO 345KV CKT 1
25SP	16ALL	0	FROM->TO	G17_109	HURON (BD KU2A) 345/230/13.8KV TRANSFORMER CKT 1	395	0.12508	109.5544	CENTER - JAMESTOWN 345KV CKT 1
25SP	16ALL	0	FROM->TO	G17_109	HURON (BD KU2A) 345/230/13.8KV TRANSFORMER CKT 1	386.2	0.12508	111.9213	CENTER - JAMESTOWN 345KV CKT 1
25SP	16ALL	0	FROM->TO	G17_109	HURON (BD KU2A) 345/230/13.8KV TRANSFORMER CKT 1	395	0.12488	112.88	BUFFALO - JAMESTOWN 345KV CKT 1
25SP	16ALL	0	FROM->TO	G17_109	HURON (BD KU2A) 345/230/13.8KV TRANSFORMER CKT 1	386.2	0.12488	115.3226	BUFFALO - JAMESTOWN 345KV CKT 1
20SP	16ALL	0	FROM->TO	G17_109	HURON (BD KU2A) 345/230/13.8KV TRANSFORMER CKT 1	395.5	0.12479	106.5517	CENTER - JAMESTOWN 345KV CKT 1
20SP	16ALL	0	FROM->TO	G17_109	HURON (BD KU2A) 345/230/13.8KV TRANSFORMER CKT 1	387.8	0.12479	108.5384	CENTER - JAMESTOWN 345KV CKT 1
20SP	16ALL	0	FROM->TO	G17_109	HURON (BD KU2A) 345/230/13.8KV TRANSFORMER CKT 1	395.5	0.12459	109.8235	BUFFALO - JAMESTOWN 345KV CKT 1
20SP	16ALL	0	FROM->TO	G17_109	HURON (BD KU2A) 345/230/13.8KV TRANSFORMER CKT 1	387.8	0.12459	111.8752	BUFFALO - JAMESTOWN 345KV CKT 1
17G	16ALL	0	FROM->TO	G17_109	HURON (BD KU2A) 345/230/13.8KV TRANSFORMER CKT 1	395.3	0.12444	105.8811	CENTER - JAMESTOWN 345KV CKT 1
17G	16ALL	0	FROM->TO	G17_109	HURON (BD KU2A) 345/230/13.8KV TRANSFORMER CKT 1	387.4	0.12444	107.9112	CENTER - JAMESTOWN 345KV CKT 1
16WP	16ALL	0	FROM->TO	G17_109	HURON (BD KU2A) 345/230/13.8KV TRANSFORMER CKT 1	397.6	0.12439	100.6187	FORBES - ROSEAU 500KV CKT 1
16WP	16ALL	0	FROM->TO	G17_109	HURON (BD KU2A) 345/230/13.8KV TRANSFORMER CKT 1	397.6	0.12439	100.7696	ROSEAU - ROSEAUM 2 500.00 500KV CKT 1
16WP	16ALL	0	FROM->TO	G17_109	HURON (BD KU2A) 345/230/13.8KV TRANSFORMER CKT 1	397.6	0.12439	100.7696	ROSEAU - ROSEAUM 2 500.00 500KV CKT 1
16WP	16ALL	0	FROM->TO	G17_109	HURON (BD KU2A) 345/230/13.8KV TRANSFORMER CKT 1	397.6	0.12439	100.9457	RIEL - ROSEAU 500KV CKT 1
16WP	16ALL	0	FROM->TO	G17_109	HURON (BD KU2A) 345/230/13.8KV TRANSFORMER CKT 1	393.1	0.12439	101.6688	FORBES - ROSEAU 500KV CKT 1
16WP	16ALL	0	FROM->TO	G17_109	HURON (BD KU2A) 345/230/13.8KV TRANSFORMER CKT 1	393.1	0.12439	101.8214	ROSEAU - ROSEAUM 2 500.00 500KV CKT 1
16WP	16ALL	0	FROM->TO	G17_109	HURON (BD KU2A) 345/230/13.8KV TRANSFORMER CKT 1	393.1	0.12439	101.8214	ROSEAU - ROSEAUM 2 500.00 500KV CKT 1
16WP	16ALL	0	FROM->TO	G17_109	HURON (BD KU2A) 345/230/13.8KV TRANSFORMER CKT 1	393.1	0.12439	101.9995	RIEL - ROSEAU 500KV CKT 1
17G	16ALL	0	FROM->TO	G17_109	HURON (BD KU2A) 345/230/13.8KV TRANSFORMER CKT 1	395.3	0.12431	108.8814	BUFFALO - JAMESTOWN 345KV CKT 1
17G	16ALL	0	FROM->TO	G17_109	HURON (BD KU2A) 345/230/13.8KV TRANSFORMER CKT 1	387.4	0.12431	110.9726	BUFFALO - JAMESTOWN 345KV CKT 1
17SP	16ALL	0	FROM->TO	G17_109	HURON (BD KU2A) 345/230/13.8KV TRANSFORMER CKT 1	394.5	0.12383	111.636	CHISAGO COUNTY - FORBES 500KV CKT 1
17SP	16ALL	0	FROM->TO	G17_109	HURON (BD KU2A) 345/230/13.8KV TRANSFORMER CKT 1	384.1	0.12383	114.3983	CHISAGO COUNTY - CHISAGO COUNTY 500KV CKT 1
17SP	16ALL	0	FROM->TO	G17_109	HURON (BD KU2A) 345/230/13.8KV TRANSFORMER CKT 1	384.1	0.12383	114.5025	CHISAGO COUNTY - FORBES 500KV CKT 1
25SP	16ALL	0	FROM->TO	G17_109	HURON (BD KU2A) 345/230/13.8KV TRANSFORMER CKT 1	395	0.12318	118.238	FORBES - ROSEAU 500KV CKT 1
25SP	16ALL	0	FROM->TO	G17_109	HURON (BD KU2A) 345/230/13.8KV TRANSFORMER CKT 1	395	0.12318	118.643	ROSEAU - ROSEAUM 2 500.00 500KV CKT 1
25SP	16ALL	0	FROM->TO	G17_109	HURON (BD KU2A) 345/230/13.8KV TRANSFORMER CKT 1	395	0.12318	118.643	ROSEAU - ROSEAUM 2 500.00 500KV CKT 1
25SP	16ALL	0	FROM->TO	G17_109	HURON (BD KU2A) 345/230/13.8KV TRANSFORMER CKT 1	395	0.12318	119.0481	RIEL - ROSEAU 500KV CKT 1
25SP	16ALL	0	FROM->TO	G17_109	HURON (BD KU2A) 345/230/13.8KV TRANSFORMER CKT 1	386.2	0.12318	120.7768	FORBES - ROSEAU 500KV CKT 1
25SP	16ALL	0	FROM->TO	G17_109	HURON (BD KU2A) 345/230/13.8KV TRANSFORMER CKT 1	386.2	0.12318	121.217	ROSEAU - ROSEAUM 2 500.00 500KV CKT 1

SEASON	GROUP	SCENARIO	DIRECTION	SOURCE	MONITORED ELEMENT	RATE (MVA)	TDF	CONTINGENCY LOADING %	CONTINGENCY
25SP	16ALL	0	FROM->TO	G17_109	HURON (BD KU2A) 345/230/13.8KV TRANSFORMER CKT 1	386.2	0.12318	121.217	ROSEAU - ROSEAUM 2 500.00 500KV CKT 1
25SP	16ALL	0	FROM->TO	G17_109	HURON (BD KU2A) 345/230/13.8KV TRANSFORMER CKT 1	386.2	0.12318	121.6313	RIEL - ROSEAU 500KV CKT 1
25SP	16ALL	0	FROM->TO	G17_109	HURON (BD KU2A) 345/230/13.8KV TRANSFORMER CKT 1	395	0.1231	108.637	BISON 3 345.00 - BUFFALO 345KV CKT 1
25SP	16ALL	0	FROM->TO	G17_109	HURON (BD KU2A) 345/230/13.8KV TRANSFORMER CKT 1	386.2	0.1231	110.957	BISON 3 345.00 - BUFFALO 345KV CKT 1
20SP	16ALL	0	FROM->TO	G17_109	HURON (BD KU2A) 345/230/13.8KV TRANSFORMER CKT 1	395.5	0.12292	116.441	FORBES - ROSEAU 500KV CKT 1
20SP	16ALL	0	FROM->TO	G17_109	HURON (BD KU2A) 345/230/13.8KV TRANSFORMER CKT 1	395.5	0.12292	116.8961	ROSEAU - ROSEAUM 2 500.00 500KV CKT 1
20SP	16ALL	0	FROM->TO	G17_109	HURON (BD KU2A) 345/230/13.8KV TRANSFORMER CKT 1	395.5	0.12292	116.8961	ROSEAU - ROSEAUM 2 500.00 500KV CKT 1
20SP	16ALL	0	FROM->TO	G17_109	HURON (BD KU2A) 345/230/13.8KV TRANSFORMER CKT 1	395.5	0.12292	117.3512	RIEL - ROSEAU 500KV CKT 1
20SP	16ALL	0	FROM->TO	G17_109	HURON (BD KU2A) 345/230/13.8KV TRANSFORMER CKT 1	387.8	0.12292	118.624	FORBES - ROSEAU 500KV CKT 1
20SP	16ALL	0	FROM->TO	G17_109	HURON (BD KU2A) 345/230/13.8KV TRANSFORMER CKT 1	387.8	0.12292	119.0882	ROSEAU - ROSEAUM 2 500.00 500KV CKT 1
20SP	16ALL	0	FROM->TO	G17_109	HURON (BD KU2A) 345/230/13.8KV TRANSFORMER CKT 1	387.8	0.12292	119.0882	ROSEAU - ROSEAUM 2 500.00 500KV CKT 1
20SP	16ALL	0	FROM->TO	G17_109	HURON (BD KU2A) 345/230/13.8KV TRANSFORMER CKT 1	387.8	0.12292	119.5524	RIEL - ROSEAU 500KV CKT 1
20SP	16ALL	0	FROM->TO	G17_109	HURON (BD KU2A) 345/230/13.8KV TRANSFORMER CKT 1	395.5	0.12282	105.8134	BISON 3 345.00 - BUFFALO 345KV CKT 1
20SP	16ALL	0	FROM->TO	G17_109	HURON (BD KU2A) 345/230/13.8KV TRANSFORMER CKT 1	387.8	0.12282	107.7855	BISON 3 345.00 - BUFFALO 345KV CKT 1
17G	16ALL	0	FROM->TO	G17_109	HURON (BD KU2A) 345/230/13.8KV TRANSFORMER CKT 1	395.3	0.12279	113.5674	FORBES - ROSEAU 500KV CKT 1
17G	16ALL	0	FROM->TO	G17_109	HURON (BD KU2A) 345/230/13.8KV TRANSFORMER CKT 1	395.3	0.12279	113.871	ROSEAU - ROSEAUM 2 500.00 500KV CKT 1
17G	16ALL	0	FROM->TO	G17_109	HURON (BD KU2A) 345/230/13.8KV TRANSFORMER CKT 1	395.3	0.12279	113.871	ROSEAU - ROSEAUM 2 500.00 500KV CKT 1
17G	16ALL	0	FROM->TO	G17_109	HURON (BD KU2A) 345/230/13.8KV TRANSFORMER CKT 1	395.3	0.12279	114.1746	RIEL - ROSEAU 500KV CKT 1
17G	16ALL	0	FROM->TO	G17_109	HURON (BD KU2A) 345/230/13.8KV TRANSFORMER CKT 1	387.4	0.12279	115.7284	FORBES - ROSEAU 500KV CKT 1
17G	16ALL	0	FROM->TO	G17_109	HURON (BD KU2A) 345/230/13.8KV TRANSFORMER CKT 1	387.4	0.12279	116.064	ROSEAU - ROSEAUM 2 500.00 500KV CKT 1
17G	16ALL	0	FROM->TO	G17_109	HURON (BD KU2A) 345/230/13.8KV TRANSFORMER CKT 1	387.4	0.12279	116.064	ROSEAU - ROSEAUM 2 500.00 500KV CKT 1
17G	16ALL	0	FROM->TO	G17_109	HURON (BD KU2A) 345/230/13.8KV TRANSFORMER CKT 1	387.4	0.12279	116.3738	RIEL - ROSEAU 500KV CKT 1
17G	16ALL	0	FROM->TO	G17_109	HURON (BD KU2A) 345/230/13.8KV TRANSFORMER CKT 1	395.3	0.12249	105.0443	BISON 3 345.00 - BUFFALO 345KV CKT 1
17G	16ALL	0	FROM->TO	G17_109	HURON (BD KU2A) 345/230/13.8KV TRANSFORMER CKT 1	387.4	0.12249	107.0573	BISON 3 345.00 - BUFFALO 345KV CKT 1
25SP	16ALL	0	FROM->TO	G17_109	HURON (BD KU2A) 345/230/13.8KV TRANSFORMER CKT 1	386.2	0.12155	109.9503	CHISAGO COUNTY - FORBES 500KV CKT 1
20L	16ALL	0	FROM->TO	G17_109	HURON (BD KU2A) 345/230/13.8KV TRANSFORMER CKT 1	397.8	0.11408	100.1217	RIEL - ROSEAU 500KV CKT 1
20L	16ALL	0	FROM->TO	G17_109	HURON (BD KU2A) 345/230/13.8KV TRANSFORMER CKT 1	393.7	0.11408	100.6563	FORBES - ROSEAU 500KV CKT 1
20L	16ALL	0	FROM->TO	G17_109	HURON (BD KU2A) 345/230/13.8KV TRANSFORMER CKT 1	393.7	0.11408	100.8595	ROSEAU - ROSEAUM 2 500.00 500KV CKT 1
20L	16ALL	0	FROM->TO	G17_109	HURON (BD KU2A) 345/230/13.8KV TRANSFORMER CKT 1	393.7	0.11408	100.8595	ROSEAU - ROSEAUM 2 500.00 500KV CKT 1
20L	16ALL	0	FROM->TO	G17_109	HURON (BD KU2A) 345/230/13.8KV TRANSFORMER CKT 1	393.7	0.11408	101.0881	RIEL - ROSEAU 500KV CKT 1
17SP	16ALL	0	TO->FROM	G17_109	KARLSTAD - WINGER 230KV CKT 1	285.8	0.04293	106.3037	FORBES - ROSEAU 500KV CKT 1
17SP	16ALL	0	TO->FROM	G17_109	KARLSTAD - WINGER 230KV CKT 1	285.8	0.04293	107.7383	ROSEAU - ROSEAUM 2 500.00 500KV CKT 1
17SP	16ALL	0	TO->FROM	G17_109	KARLSTAD - WINGER 230KV CKT 1	285.8	0.04293	107.7383	ROSEAU - ROSEAUM 2 500.00 500KV CKT 1
17SP	16ALL	0	TO->FROM	G17_109	KARLSTAD - WINGER 230KV CKT 1	285.8	0.04293	109.1379	RIEL - ROSEAU 500KV CKT 1
25SP	16ALL	0	TO->FROM	G17_109	KARLSTAD - WINGER 230KV CKT 1	286.4	0.0414	100.75	ROSEAU - ROSEAUM 2 500.00 500KV CKT 1
25SP	16ALL	0	TO->FROM	G17_109	KARLSTAD - WINGER 230KV CKT 1	286.4	0.0414	100.75	ROSEAU - ROSEAUM 2 500.00 500KV CKT 1
25SP	16ALL	0	TO->FROM	G17_109	KARLSTAD - WINGER 230KV CKT 1	286.4	0.0414	102.0768	RIEL - ROSEAU 500KV CKT 1
20SP	16ALL	0	TO->FROM	G17_109	KARLSTAD - WINGER 230KV CKT 1	286	0.04033	105.4881	FORBES - ROSEAU 500KV CKT 1
20SP	16ALL	0	TO->FROM	G17_109	KARLSTAD - WINGER 230KV CKT 1	286	0.04033	106.8867	ROSEAU - ROSEAUM 2 500.00 500KV CKT 1
20SP	16ALL	0	TO->FROM	G17_109	KARLSTAD - WINGER 230KV CKT 1	286	0.04033	106.8867	ROSEAU - ROSEAUM 2 500.00 500KV CKT 1
20SP	16ALL	0	TO->FROM	G17_109	KARLSTAD - WINGER 230KV CKT 1	286	0.04033	108.2154	RIEL - ROSEAU 500KV CKT 1
20SP	16ALL	0	FROM->TO	G17_109	LEWIS & CLARK - RICHLAND 115KV CKT 1	100.9	0.26705	105.8593	BELFIELD - MEDORA 230KV CKT 1
20SP	16ALL	0	FROM->TO	G17_109	LEWIS & CLARK - RICHLAND 115KV CKT 1	100.9	0.26705	109.6254	BEAVERHILL4 230.00 - MEDORA 230KV CKT 1
17SP	16ALL	0	FROM->TO	G17_109	LEWIS & CLARK - RICHLAND 115KV CKT 1	101	0.26664	111.2634	BEAVERHILL4 230.00 - DAWSON CREEK 230KV CKT 1
17SP	16ALL	0	FROM->TO	G17_109	LEWIS & CLARK - RICHLAND 115KV CKT 1	101	0.26664	129.9762	BELFIELD - MEDORA 230KV CKT 1
17SP	16ALL	0	FROM->TO	G17_109	LEWIS & CLARK - RICHLAND 115KV CKT 1	101	0.26664	133.7386	BEAVERHILL4 230.00 - MEDORA 230KV CKT 1
16WP	16ALL	0	FROM->TO	G17_109	LEWIS & CLARK - RICHLAND 115KV CKT 1	124	0.26639	110.3	BELFIELD - MEDORA 230KV CKT 1
16WP	16ALL	0	FROM->TO	G17_109	LEWIS & CLARK - RICHLAND 115KV CKT 1	124	0.26639	113.929	BEAVERHILL4 230.00 - MEDORA 230KV CKT 1
17G	16ALL	0	FROM->TO	G17_109	LEWIS & CLARK - RICHLAND 115KV CKT 1	100.9	0.26617	106.5253	BELFIELD - MEDORA 230KV CKT 1
17G	16ALL	0	FROM->TO	G17_109	LEWIS & CLARK - RICHLAND 115KV CKT 1	100.9	0.26617	110.1923	BEAVERHILL4 230.00 - MEDORA 230KV CKT 1
17SP	00NR	0	FROM->TO	G17_109	LEWIS & CLARK - RICHLAND 115KV CKT 1	101	0.2656	102.2693	BELFIELD - MEDORA 230KV CKT 1
17SP	00NR	0	FROM->TO	G17_109	LEWIS & CLARK - RICHLAND 115KV CKT 1	101	0.2656	104.2495	BEAVERHILL4 230.00 - DAWSON CREEK 230KV CKT 1
17SP	00NR	0	FROM->TO	G17_109	LEWIS & CLARK - RICHLAND 115KV CKT 1	101	0.2656	105.9327	BEAVERHILL4 230.00 - MEDORA 230KV CKT 1
17SP	16ALL	0	FROM->TO	G17_109	LEWIS & CLARK - RICHLAND 115KV CKT 1	101	0.19552	103.4456	BELFIELD - CHARLIE CREEK 345KV CKT 1
17SP	00NR	0	FROM->TO	G17_109	LEWIS & CLARK - RICHLAND 115KV CKT 1	101	0.17169	100.6345	CULBERTSN E7115.00 - WILISTON 115KV CKT 1

SEASON	GROUP	SCENARIO	DIRECTION	SOURCE	MONITORED ELEMENT	RATE (MVA)	TDF	CONTINGENCY LOADING %	CONTINGENCY
17SP	16ALL	0	FROM->TO	G17_109	LEWIS & CLARK - RICHLAND 115KV CKT 1	101	0.17124	100.8673	CULBERTSON - POPLAR 115KV CKT 1
17SP	16ALL	0	FROM->TO	G17_109	LEWIS & CLARK - RICHLAND 115KV CKT 1	101	0.17124	104.2337	POPLAR - WOLF POINT 115KV CKT 1
17SP	16ALL	0	FROM->TO	G17_109	LEWIS & CLARK - RICHLAND 115KV CKT 1	101	0.17119	119.1643	CULBERTSN E7115.00 - WILISTON 115KV CKT 1
16WP	16ALL	0	FROM->TO	G17_109	LEWIS & CLARK - RICHLAND 115KV CKT 1	124	0.17097	104.0065	CULBERTSN E7115.00 - WILISTON 115KV CKT 1
17G	16ALL	0	FROM->TO	G17_109	LEWIS & CLARK - RICHLAND 115KV CKT 1	100.9	0.1707	100.4519	CULBERTSN E7115.00 - WILISTON 115KV CKT 1
17SP	16ALL	0	FROM->TO	G17_109	LEWIS & CLARK - RICHLAND 115KV CKT 1	101	0.15277	102.7406	BISON - MAURINE 230KV CKT 1
17SP	16ALL	0	FROM->TO	G17_109	LEWIS & CLARK - RICHLAND 115KV CKT 1	101	0.15277	103.5327	BISON - HETINGER 230KV CKT 1
17SP	16ALL	0	FROM->TO	G17_109	LEWIS & CLARK - RICHLAND 115KV CKT 1	101	0.15005	101.6871	BELFIELD - DAGLUM 4230.00 230KV CKT 1
17SP	16ALL	0	FROM->TO	G17_109	LEWIS & CLARK - RICHLAND 115KV CKT 1	101	0.13668	105.2713	CHARLIE CREEK (CCR KV2A) 345/115/13.8KV TRANSFORMER CKT 1
17SP	16ALL	0	FROM->TO	G17_109	MAPLE RIVER TAP NORTH - SHEYNNE 115KV CKT 1	160	0.03101	131.9575	BISON 3 345.00 - BUFFALO 345KV CKT 1
17G	16ALL	0	FROM->TO	G17_109	MAPLE RIVER TAP NORTH - SHEYNNE 115KV CKT 1	160.3	0.03066	122.6375	BISON 3 345.00 - BUFFALO 345KV CKT 1
16WP	16ALL	0	FROM->TO	G17_109	MAPLE RIVER TAP NORTH - SHEYNNE 115KV CKT 1	155.8	0.03053	127.371	BISON 3 345.00 - BUFFALO 345KV CKT 1
25SP	16ALL	0	FROM->TO	G17_109	MAPLE RIVER TAP NORTH - SHEYNNE 115KV CKT 1	158	0.03049	141.3165	BISON 3 345.00 - BUFFALO 345KV CKT 1
20SP	16ALL	0	FROM->TO	G17_109	MAPLE RIVER TAP NORTH - SHEYNNE 115KV CKT 1	158.2	0.03043	133.9747	BISON 3 345.00 - BUFFALO 345KV CKT 1
20WP	16ALL	0	FROM->TO	G17_109	MAPLE RIVER TAP NORTH - SHEYNNE 115KV CKT 1	155.6	0.02987	126.1774	BISON 3 345.00 - BUFFALO 345KV CKT 1
17SP	16ALL	0	FROM->TO	G17_109	MAURINE (MA KV1A) 230/115/13.8KV TRANSFORMER CKT 1	123.7	0.0976	106.9329	MAURINE - NUNDRWD-LNX3230.00 230KV CKT 1
17SP	16ALL	0	FROM->TO	G17_109	MAURINE (MA KV1A) 230/115/13.8KV TRANSFORMER CKT 1	123.7	0.0976	106.9329	NUNDRWD - NUNDRWD-LNX3230.00 230KV CKT Z
17SP	16ALL	0	FROM->TO	G17_109	MAURINE (MA KV1A) 230/115/13.8KV TRANSFORMER CKT 1	123.5	0.0976	107.0251	MAURINE - NUNDRWD-LNX3230.00 230KV CKT 1
17SP	16ALL	0	FROM->TO	G17_109	MAURINE (MA KV1A) 230/115/13.8KV TRANSFORMER CKT 1	123.5	0.0976	107.0251	NUNDRWD - NUNDRWD-LNX3230.00 230KV CKT Z
25SP	16ALL	0	FROM->TO	G17_109	MAURINE (MA KV1A) 230/115/13.8KV TRANSFORMER CKT 1	123	0.0967	103.1642	MAURINE - NUNDRWD-LNX3230.00 230KV CKT 1
25SP	16ALL	0	FROM->TO	G17_109	MAURINE (MA KV1A) 230/115/13.8KV TRANSFORMER CKT 1	123	0.0967	103.1642	NUNDRWD - NUNDRWD-LNX3230.00 230KV CKT Z
25SP	16ALL	0	FROM->TO	G17_109	MAURINE (MA KV1A) 230/115/13.8KV TRANSFORMER CKT 1	122.5	0.0967	103.5037	MAURINE - NUNDRWD-LNX3230.00 230KV CKT 1
25SP	16ALL	0	FROM->TO	G17_109	MAURINE (MA KV1A) 230/115/13.8KV TRANSFORMER CKT 1	122.5	0.0967	103.5037	NUNDRWD - NUNDRWD-LNX3230.00 230KV CKT Z
20L	16ALL	0	FROM->TO	G17_109	MAURINE (MA KV1A) 230/115/13.8KV TRANSFORMER CKT 1	124.9	0.09495	112.4484	NUNDRWD - NUNDRWD-LNX3230.00 230KV CKT Z
20L	16ALL	0	FROM->TO	G17_109	MAURINE (MA KV1A) 230/115/13.8KV TRANSFORMER CKT 1	124.9	0.09495	112.4484	MAURINE - NUNDRWD-LNX3230.00 230KV CKT 1
20L	16ALL	0	FROM->TO	G17_109	MAURINE (MA KV1A) 230/115/13.8KV TRANSFORMER CKT 1	124.8	0.09495	112.5385	NUNDRWD - NUNDRWD-LNX3230.00 230KV CKT Z
20L	16ALL	0	FROM->TO	G17_109	MAURINE (MA KV1A) 230/115/13.8KV TRANSFORMER CKT 1	124.8	0.09495	112.5385	MAURINE - NUNDRWD-LNX3230.00 230KV CKT 1
17SP	16ALL	0	TO->FROM	G17_109	MILES CITY EAST - SHIRLEY TAP 115.00 115KV CKT 1	87.4	0.08248	100.0686	DAWSON CREEK - MILES CITY EAST 230KV CKT 1
17SP	16ALL	0	TO->FROM	G17_109	OGALLALA - SIDNEY 230KV CKT 1	319.6	0.04602	132.8223	SIDNEY - SIDNEY1-LNX3345.00 345KV CKT Z
17SP	16ALL	0	TO->FROM	G17_109	OGALLALA - SIDNEY 230KV CKT 1	319.6	0.04602	132.8223	KEYSTONE - SIDNEY1-LNX3345.00 345KV CKT 1
25SP	16ALL	0	TO->FROM	G17_109	OGALLALA - SIDNEY 230KV CKT 1	319.9	0.04349	127.6511	KEYSTONE - SIDNEY1-LNX3345.00 345KV CKT 1
25SP	16ALL	0	TO->FROM	G17_109	OGALLALA - SIDNEY 230KV CKT 1	319.9	0.04349	127.6511	SIDNEY - SIDNEY1-LNX3345.00 345KV CKT Z
20SP	16ALL	0	TO->FROM	G17_109	OGALLALA - SIDNEY 230KV CKT 1	319.9	0.04318	126.7946	SIDNEY - SIDNEY1-LNX3345.00 345KV CKT Z
20SP	16ALL	0	TO->FROM	G17_109	OGALLALA - SIDNEY 230KV CKT 1	319.9	0.04318	126.7946	KEYSTONE - SIDNEY1-LNX3345.00 345KV CKT 1
16WP	16ALL	0	TO->FROM	G17_109	OGALLALA - SIDNEY 230KV CKT 1	319.5	0.04227	124.1803	KEYSTONE - SIDNEY1-LNX3345.00 345KV CKT 1
16WP	16ALL	0	TO->FROM	G17_109	OGALLALA - SIDNEY 230KV CKT 1	319.5	0.04227	124.1803	SIDNEY - SIDNEY1-LNX3345.00 345KV CKT Z
17G	16ALL	0	TO->FROM	G17_109	OGALLALA - SIDNEY 230KV CKT 1	319.4	0.04094	137.2686	SIDNEY - SIDNEY1-LNX3345.00 345KV CKT Z
17G	16ALL	0	TO->FROM	G17_109	OGALLALA - SIDNEY 230KV CKT 1	319.4	0.04094	137.2686	KEYSTONE - SIDNEY1-LNX3345.00 345KV CKT 1
20WP	16ALL	0	TO->FROM	G17_109	OGALLALA - SIDNEY 230KV CKT 1	319.7	0.04057	115.3181	SIDNEY - SIDNEY1-LNX3345.00 345KV CKT Z
20WP	16ALL	0	TO->FROM	G17_109	OGALLALA - SIDNEY 230KV CKT 1	319.7	0.04057	115.3181	KEYSTONE - SIDNEY1-LNX3345.00 345KV CKT 1
17SP	16ALL	0	FROM->TO	G17_109	PRAIRIE - WINGER 230KV CKT 1	399.8	0.04744	108.9915	FORBES - ROSEAU 500KV CKT 1
17SP	16ALL	0	FROM->TO	G17_109	PRAIRIE - WINGER 230KV CKT 1	399.8	0.04744	110.5173	ROSEAU - ROSEAUM 2 500.00 500KV CKT 1
17SP	16ALL	0	FROM->TO	G17_109	PRAIRIE - WINGER 230KV CKT 1	399.8	0.04744	110.5173	ROSEAU - ROSEAUM 2 500.00 500KV CKT 1
17SP	16ALL	0	FROM->TO	G17_109	PRAIRIE - WINGER 230KV CKT 1	399.8	0.04744	111.993	RIEL - ROSEAU 500KV CKT 1
20SP	16ALL	0	FROM->TO	G17_109	PRAIRIE - WINGER 230KV CKT 1	399.9	0.04623	107.843	FORBES - ROSEAU 500KV CKT 1
20SP	16ALL	0	FROM->TO	G17_109	PRAIRIE - WINGER 230KV CKT 1	399.9	0.04623	109.3183	ROSEAU - ROSEAUM 2 500.00 500KV CKT 1
20SP	16ALL	0	FROM->TO	G17_109	PRAIRIE - WINGER 230KV CKT 1	399.9	0.04623	109.3183	ROSEAU - ROSEAUM 2 500.00 500KV CKT 1
20SP	16ALL	0	FROM->TO	G17_109	PRAIRIE - WINGER 230KV CKT 1	399.9	0.04623	110.7687	RIEL - ROSEAU 500KV CKT 1
25SP	16ALL	0	FROM->TO	G17_109	PRAIRIE - WINGER 230KV CKT 1	399.9	0.04429	103.4199	FORBES - ROSEAU 500KV CKT 1
25SP	16ALL	0	FROM->TO	G17_109	PRAIRIE - WINGER 230KV CKT 1	399.9	0.04429	104.6452	ROSEAU - ROSEAUM 2 500.00 500KV CKT 1
25SP	16ALL	0	FROM->TO	G17_109	PRAIRIE - WINGER 230KV CKT 1	399.9	0.04429	104.6452	ROSEAU - ROSEAUM 2 500.00 500KV CKT 1
25SP	16ALL	0	FROM->TO	G17_109	PRAIRIE - WINGER 230KV CKT 1	399.9	0.04429	105.8705	RIEL - ROSEAU 500KV CKT 1
25SP	16ALL	2	TO->FROM	G17_109	AUDUBON - SHEYNNE 230KV CKT 1	278.7	0.03438	100.5195	ROSEAU - ROSEAUM 2 500.00 500KV CKT 1
25SP	16ALL	2	TO->FROM	G17_109	AUDUBON - SHEYNNE 230KV CKT 1	278.7	0.03438	100.5195	ROSEAU - ROSEAUM 2 500.00 500KV CKT 1
25SP	16ALL	2	TO->FROM	G17_109	AUDUBON - SHEYNNE 230KV CKT 1	278.7	0.03438	101.1295	RIEL - ROSEAU 500KV CKT 1

SEASON	GROUP	SCENARIO	DIRECTION	SOURCE	MONITORED ELEMENT	RATE (MVA)	TDF	CONTINGENCY LOADING %	CONTINGENCY
20SP	16ALL	2	TO->FROM	G17_109	AUDUBON - SHEYNNE 230KV CKT 1	278.6	0.03412	100.1981	RIEL - ROSEAU 500KV CKT 1
20L	16NR	2	TO->FROM	G17_109	BEULAH - COYOTE 115KV CKT 1	102	0.04282	182.3553	CENTER - COYOTE 345KV CKT 1
17G	16NR	2	TO->FROM	G17_109	BEULAH - COYOTE 115KV CKT 1	101.9	0.04185	311.5721	CENTER - COYOTE 345KV CKT 1
20L	16ALL	2	TO->FROM	G17_109	BEULAH - COYOTE 115KV CKT 1	102	0.0414	181.8902	CENTER - COYOTE 345KV CKT 1
20L	13ALL	2	TO->FROM	G17_109	BEULAH - COYOTE 115KV CKT 1	101.9	0.04122	148.9443	CENTER - COYOTE 345KV CKT 1
16WP	00NR	2	TO->FROM	G17_109	BEULAH - COYOTE 115KV CKT 1	122.9	0.04084	268.7297	CENTER - COYOTE 345KV CKT 1
17SP	00NR	2	TO->FROM	G17_109	BEULAH - COYOTE 115KV CKT 1	101.9	0.04082	275.3311	CENTER - COYOTE 345KV CKT 1
20SP	00NR	2	TO->FROM	G17_109	BEULAH - COYOTE 115KV CKT 1	101.9	0.04074	228.3972	CENTER - COYOTE 345KV CKT 1
25SP	00NR	2	TO->FROM	G17_109	BEULAH - COYOTE 115KV CKT 1	101.9	0.04072	243.4057	CENTER - COYOTE 345KV CKT 1
17G	16ALL	2	TO->FROM	G17_109	BEULAH - COYOTE 115KV CKT 1	102	0.04056	310.5961	CENTER - COYOTE 345KV CKT 1
17G	13ALL	2	TO->FROM	G17_109	BEULAH - COYOTE 115KV CKT 1	102	0.04051	275.1212	CENTER - COYOTE 345KV CKT 1
20WP	16ALL	2	TO->FROM	G17_109	BEULAH - COYOTE 115KV CKT 1	122.8	0.04048	267.9642	CENTER - COYOTE 345KV CKT 1
20WP	00NR	2	TO->FROM	G17_109	BEULAH - COYOTE 115KV CKT 1	122.9	0.04046	258.0531	CENTER - COYOTE 345KV CKT 1
20WP	13ALL	2	TO->FROM	G17_109	BEULAH - COYOTE 115KV CKT 1	122.7	0.04046	241.8269	CENTER - COYOTE 345KV CKT 1
20SP	16ALL	2	TO->FROM	G17_109	BEULAH - COYOTE 115KV CKT 1	102	0.04044	238.3804	CENTER - COYOTE 345KV CKT 1
20SP	13ALL	2	TO->FROM	G17_109	BEULAH - COYOTE 115KV CKT 1	102	0.04043	205.6938	CENTER - COYOTE 345KV CKT 1
25SP	16ALL	2	TO->FROM	G17_109	BEULAH - COYOTE 115KV CKT 1	102	0.0404	254.5412	CENTER - COYOTE 345KV CKT 1
25SP	13ALL	2	TO->FROM	G17_109	BEULAH - COYOTE 115KV CKT 1	102	0.04039	221.9638	CENTER - COYOTE 345KV CKT 1
16WP	16ALL	2	TO->FROM	G17_109	BEULAH - COYOTE 115KV CKT 1	122.9	0.04037	275.7006	CENTER - COYOTE 345KV CKT 1
16WP	13ALL	2	TO->FROM	G17_109	BEULAH - COYOTE 115KV CKT 1	122.9	0.04034	247.725	CENTER - COYOTE 345KV CKT 1
17SP	16ALL	2	TO->FROM	G17_109	BEULAH - COYOTE 115KV CKT 1	101.9	0.04029	282.0451	CENTER - COYOTE 345KV CKT 1
17SP	13ALL	2	TO->FROM	G17_109	BEULAH - COYOTE 115KV CKT 1	102	0.04027	248.6441	CENTER - COYOTE 345KV CKT 1
17G	16ALL	2	FROM->TO	G17_109	BEULAH - STANTONTAP 7115.00 115KV CKT 1	121	0.0371	102.2645	CENTER - COYOTE 345KV CKT 1
16WP	16ALL	2	FROM->TO	G17_109	BEULAH - STANTONTAP 7115.00 115KV CKT 1	131.9	0.03666	106.4958	CENTER - COYOTE 345KV CKT 1
20WP	16ALL	2	FROM->TO	G17_109	BEULAH - STANTONTAP 7115.00 115KV CKT 1	132	0.03503	106.6121	CENTER - COYOTE 345KV CKT 1
25SP	16ALL	2	TO->FROM	G17_109	BUFFALO - JAMESTOWN 345KV CKT 1	704.9	0.10687	118.5643	CENTER - CNTSHNT3 345.00 345KV CKT Z1
25SP	16ALL	2	TO->FROM	G17_109	BUFFALO - JAMESTOWN 345KV CKT 1	704.9	0.10687	118.5643	CNTSHNT3 345.00 - PRAIRIE3 345.00 345KV CKT 1
17SP	16ALL	2	TO->FROM	G17_109	BUFFALO - JAMESTOWN 345KV CKT 1	704.4	0.1065	110.7922	CENTER - CNTSHNT3 345.00 345KV CKT Z1
17SP	16ALL	2	TO->FROM	G17_109	BUFFALO - JAMESTOWN 345KV CKT 1	704.4	0.1065	110.7922	CNTSHNT3 345.00 - PRAIRIE3 345.00 345KV CKT 1
20SP	16ALL	2	TO->FROM	G17_109	BUFFALO - JAMESTOWN 345KV CKT 1	704.8	0.10649	112.2446	CENTER - CNTSHNT3 345.00 345KV CKT Z1
20SP	16ALL	2	TO->FROM	G17_109	BUFFALO - JAMESTOWN 345KV CKT 1	704.8	0.10649	112.2446	CNTSHNT3 345.00 - PRAIRIE3 345.00 345KV CKT 1
17G	16ALL	2	TO->FROM	G17_109	BUFFALO - JAMESTOWN 345KV CKT 1	704.9	0.10533	105.056	CNTSHNT3 345.00 - PRAIRIE3 345.00 345KV CKT 1
17G	16ALL	2	TO->FROM	G17_109	BUFFALO - JAMESTOWN 345KV CKT 1	704.9	0.10533	105.056	CENTER - CNTSHNT3 345.00 345KV CKT Z1
16WP	16ALL	2	TO->FROM	G17_109	BUFFALO - JAMESTOWN 345KV CKT 1	716.7	0.10483	106.1895	CNTSHNT3 345.00 - PRAIRIE3 345.00 345KV CKT 1
16WP	16ALL	2	TO->FROM	G17_109	BUFFALO - JAMESTOWN 345KV CKT 1	716.7	0.10483	106.1895	CENTER - CNTSHNT3 345.00 345KV CKT Z1
20WP	16ALL	2	TO->FROM	G17_109	BUFFALO - JAMESTOWN 345KV CKT 1	716.8	0.10466	105.577	CENTER - CNTSHNT3 345.00 345KV CKT Z1
20WP	16ALL	2	TO->FROM	G17_109	BUFFALO - JAMESTOWN 345KV CKT 1	716.8	0.10466	105.577	CNTSHNT3 345.00 - PRAIRIE3 345.00 345KV CKT 1
25SP	16ALL	2	TO->FROM	G17_109	BUFFALO - JAMESTOWN 345KV CKT 1	704.9	0.10465	109.6133	GROTON-LNX3 345.00 - LELAND1-LNX3345.00 345KV CKT 1
25SP	16ALL	2	TO->FROM	G17_109	BUFFALO - JAMESTOWN 345KV CKT 1	704.9	0.10465	109.6133	GROTON - GROTON-LNX3 345.00 345KV CKT Z
25SP	16ALL	2	TO->FROM	G17_109	BUFFALO - JAMESTOWN 345KV CKT 1	704.9	0.10465	109.8261	LELAND OLDS - LELAND1-LNX3345.00 345KV CKT Z
25SP	16ALL	2	TO->FROM	G17_109	BUFFALO - JAMESTOWN 345KV CKT 1	704.9	0.10465	109.8403	P12:345:UMZB:# 109 #: LOS GRT IN ND. LOS GRT
25SP	16ALL	2	TO->FROM	G17_109	BUFFALO - JAMESTOWN 345KV CKT 1	704.9	0.1044	108.8671	HURON (BD 90343-A) 345/230/13.8KV TRANSFORMER CKT 1
25SP	16ALL	2	TO->FROM	G17_109	BUFFALO - JAMESTOWN 345KV CKT 1	704.9	0.1044	108.8671	P13:345:UMZB:# 244 #: BD IN SD. LOSS OF TX
25SP	16ALL	2	TO->FROM	G17_109	BUFFALO - JAMESTOWN 345KV CKT 1	704.9	0.1044	108.8671	BRDLAND-LNX3345.00 - HURON 345KV CKT Z
25SP	16ALL	2	TO->FROM	G17_109	BUFFALO - JAMESTOWN 345KV CKT 1	704.9	0.1044	108.9806	ANTELOP-LNX3345.00 - ANTELOPE VALLEY 345KV CKT Z
25SP	16ALL	2	TO->FROM	G17_109	BUFFALO - JAMESTOWN 345KV CKT 1	704.9	0.1044	109.0089	P12:345:UMZB:# 102 #: AVS BD IN ND. AVS BRD LR
25SP	16ALL	2	TO->FROM	G17_109	BUFFALO - JAMESTOWN 345KV CKT 1	704.9	0.1044	109.0231	P12:345:UMZB:# 103 #: BD IN SD. LOSS OF LINE
20SP	16ALL	2	TO->FROM	G17_109	BUFFALO - JAMESTOWN 345KV CKT 1	704.8	0.10435	104.3042	GROTON-LNX3 345.00 - LELAND1-LNX3345.00 345KV CKT 1
20SP	16ALL	2	TO->FROM	G17_109	BUFFALO - JAMESTOWN 345KV CKT 1	704.8	0.10435	104.3042	GROTON - GROTON-LNX3 345.00 345KV CKT Z
20SP	16ALL	2	TO->FROM	G17_109	BUFFALO - JAMESTOWN 345KV CKT 1	704.8	0.10435	104.5028	LELAND OLDS - LELAND1-LNX3345.00 345KV CKT Z
20SP	16ALL	2	TO->FROM	G17_109	BUFFALO - JAMESTOWN 345KV CKT 1	704.8	0.10435	104.5312	P12:345:UMZB:# 109 #: LOS GRT IN ND. LOS GRT
17SP	16ALL	2	TO->FROM	G17_109	BUFFALO - JAMESTOWN 345KV CKT 1	704.4	0.10434	103.4418	GROTON - GROTON-LNX3 345.00 345KV CKT Z
17SP	16ALL	2	TO->FROM	G17_109	BUFFALO - JAMESTOWN 345KV CKT 1	704.4	0.10434	103.4418	GROTON-LNX3 345.00 - LELAND1-LNX3345.00 345KV CKT 1
17SP	16ALL	2	TO->FROM	G17_109	BUFFALO - JAMESTOWN 345KV CKT 1	704.4	0.10434	103.6689	LELAND OLDS - LELAND1-LNX3345.00 345KV CKT Z
17SP	16ALL	2	TO->FROM	G17_109	BUFFALO - JAMESTOWN 345KV CKT 1	704.4	0.10434	103.6973	P12:345:UMZB:# 109 #: LOS GRT IN ND. LOS GRT

SEASON	GROUP	SCENARIO	DIRECTION	SOURCE	MONITORED ELEMENT	RATE (MVA)	TDF	CONTINGENCY LOADING %	CONTINGENCY
25SP	16ALL	2	TO->FROM	G17_109	BUFFALO - JAMESTOWN 345KV CKT 1	704.9	0.10418	109.0146	FTTHOM1-LNX3345.00 - G16-017-TAP 345.00 345KV CKT 1
25SP	16ALL	2	TO->FROM	G17_109	BUFFALO - JAMESTOWN 345KV CKT 1	704.9	0.10418	109.0146	FT THOMPSON - FTTHOM1-LNX3345.00 345KV CKT Z
20SP	16ALL	2	TO->FROM	G17_109	BUFFALO - JAMESTOWN 345KV CKT 1	704.8	0.10412	103.5868	P13:345:UMZB:# 244 #: BD IN SD. LOSS OF TX
20SP	16ALL	2	TO->FROM	G17_109	BUFFALO - JAMESTOWN 345KV CKT 1	704.8	0.10412	103.5868	HURON (BD 90343-A) 345/230/13.8KV TRANSFORMER CKT 1
20SP	16ALL	2	TO->FROM	G17_109	BUFFALO - JAMESTOWN 345KV CKT 1	704.8	0.10412	103.5868	BRDLAND-LNX3345.00 - HURON 345KV CKT Z
20SP	16ALL	2	TO->FROM	G17_109	BUFFALO - JAMESTOWN 345KV CKT 1	704.8	0.10412	103.5868	ANTELOP-LNX3345.00 - BRDLAND-LNX3345.00 345KV CKT 1
20SP	16ALL	2	TO->FROM	G17_109	BUFFALO - JAMESTOWN 345KV CKT 1	704.8	0.10412	103.7003	ANTELOP-LNX3345.00 - ANTELOPE VALLEY 345KV CKT Z
20SP	16ALL	2	TO->FROM	G17_109	BUFFALO - JAMESTOWN 345KV CKT 1	704.8	0.10412	103.7287	P12:345:UMZB:# 103 #: BD IN SD. LOSS OF LINE
20SP	16ALL	2	TO->FROM	G17_109	BUFFALO - JAMESTOWN 345KV CKT 1	704.8	0.10412	103.7287	P12:345:UMZB:# 102 #: AVS BD IN ND. AVS BRD LR
17SP	16ALL	2	TO->FROM	G17_109	BUFFALO - JAMESTOWN 345KV CKT 1	704.4	0.10399	102.4918	BROADLAND - HURON 230KV CKT 1
17SP	16ALL	2	TO->FROM	G17_109	BUFFALO - JAMESTOWN 345KV CKT 1	704.4	0.10399	102.506	HURON (BD 90343-A) 345/230/13.8KV TRANSFORMER CKT 1
17SP	16ALL	2	TO->FROM	G17_109	BUFFALO - JAMESTOWN 345KV CKT 1	704.4	0.10399	102.506	P13:345:UMZB:# 244 #: BD IN SD. LOSS OF TX
17SP	16ALL	2	TO->FROM	G17_109	BUFFALO - JAMESTOWN 345KV CKT 1	704.4	0.10399	102.506	BRDLAND-LNX3345.00 - HURON 345KV CKT Z
17SP	16ALL	2	TO->FROM	G17_109	BUFFALO - JAMESTOWN 345KV CKT 1	704.4	0.10399	102.506	ANTELOP-LNX3345.00 - BRDLAND-LNX3345.00 345KV CKT 1
17SP	16ALL	2	TO->FROM	G17_109	BUFFALO - JAMESTOWN 345KV CKT 1	704.4	0.10399	102.6337	ANTELOP-LNX3345.00 - ANTELOPE VALLEY 345KV CKT Z
17SP	16ALL	2	TO->FROM	G17_109	BUFFALO - JAMESTOWN 345KV CKT 1	704.4	0.10399	102.6621	P12:345:UMZB:# 103 #: BD IN SD. LOSS OF LINE
17SP	16ALL	2	TO->FROM	G17_109	BUFFALO - JAMESTOWN 345KV CKT 1	704.4	0.10399	102.6621	P12:345:UMZB:# 102 #: AVS BD IN ND. AVS BRD LR
20SP	16ALL	2	TO->FROM	G17_109	BUFFALO - JAMESTOWN 345KV CKT 1	704.8	0.10391	103.735	FT THOMPSON - FTTHOM1-LNX3345.00 345KV CKT Z
20SP	16ALL	2	TO->FROM	G17_109	BUFFALO - JAMESTOWN 345KV CKT 1	704.8	0.10391	103.735	FTTHOM1-LNX3345.00 - G16-017-TAP 345.00 345KV CKT 1
17SP	16ALL	2	TO->FROM	G17_109	BUFFALO - JAMESTOWN 345KV CKT 1	704.4	0.10368	102.4923	FTTHOM1-LNX3345.00 - G16-017-TAP 345.00 345KV CKT 1
17SP	16ALL	2	TO->FROM	G17_109	BUFFALO - JAMESTOWN 345KV CKT 1	704.4	0.10368	102.4923	FT THOMPSON - FTTHOM1-LNX3345.00 345KV CKT Z
25SP	16ALL	2	TO->FROM	G17_109	BUFFALO - JAMESTOWN 345KV CKT 1	704.9	0.1017	108.7973	FARGO - SHEYNNE 230KV CKT 1
20SP	16ALL	2	TO->FROM	G17_109	BUFFALO - JAMESTOWN 345KV CKT 1	704.8	0.10147	103.7038	FARGO - SHEYNNE 230KV CKT 1
17SP	16ALL	2	TO->FROM	G17_109	BUFFALO - JAMESTOWN 345KV CKT 1	704.4	0.10082	115.0659	FORBES - ROSEAU 500KV CKT 1
17SP	16ALL	2	TO->FROM	G17_109	BUFFALO - JAMESTOWN 345KV CKT 1	704.4	0.10082	115.5202	ROSEAU - ROSEAUM 2 500.00 500KV CKT 1
17SP	16ALL	2	TO->FROM	G17_109	BUFFALO - JAMESTOWN 345KV CKT 1	704.4	0.10082	115.5202	ROSEAU - ROSEAUM 2 500.00 500KV CKT 1
17SP	16ALL	2	TO->FROM	G17_109	BUFFALO - JAMESTOWN 345KV CKT 1	704.4	0.10082	115.9603	RIEL - ROSEAU 500KV CKT 1
25SP	16ALL	2	TO->FROM	G17_109	BUFFALO - JAMESTOWN 345KV CKT 1	704.9	0.10081	120.2934	FORBES - ROSEAU 500KV CKT 1
25SP	16ALL	2	TO->FROM	G17_109	BUFFALO - JAMESTOWN 345KV CKT 1	704.9	0.10081	120.7048	ROSEAU - ROSEAUM 2 500.00 500KV CKT 1
25SP	16ALL	2	TO->FROM	G17_109	BUFFALO - JAMESTOWN 345KV CKT 1	704.9	0.10081	120.7048	ROSEAU - ROSEAUM 2 500.00 500KV CKT 1
25SP	16ALL	2	TO->FROM	G17_109	BUFFALO - JAMESTOWN 345KV CKT 1	704.9	0.10081	121.102	RIEL - ROSEAU 500KV CKT 1
20SP	16ALL	2	TO->FROM	G17_109	BUFFALO - JAMESTOWN 345KV CKT 1	704.8	0.10071	116.1436	FORBES - ROSEAU 500KV CKT 1
20SP	16ALL	2	TO->FROM	G17_109	BUFFALO - JAMESTOWN 345KV CKT 1	704.8	0.10071	116.5976	ROSEAU - ROSEAUM 2 500.00 500KV CKT 1
20SP	16ALL	2	TO->FROM	G17_109	BUFFALO - JAMESTOWN 345KV CKT 1	704.8	0.10071	116.5976	ROSEAU - ROSEAUM 2 500.00 500KV CKT 1
20SP	16ALL	2	TO->FROM	G17_109	BUFFALO - JAMESTOWN 345KV CKT 1	704.8	0.10071	117.0375	RIEL - ROSEAU 500KV CKT 1
17G	16ALL	2	TO->FROM	G17_109	BUFFALO - JAMESTOWN 345KV CKT 1	704.9	0.0997	106.124	FORBES - ROSEAU 500KV CKT 1
17G	16ALL	2	TO->FROM	G17_109	BUFFALO - JAMESTOWN 345KV CKT 1	704.9	0.0997	106.4077	ROSEAU - ROSEAUM 2 500.00 500KV CKT 1
17G	16ALL	2	TO->FROM	G17_109	BUFFALO - JAMESTOWN 345KV CKT 1	704.9	0.0997	106.4077	ROSEAU - ROSEAUM 2 500.00 500KV CKT 1
17G	16ALL	2	TO->FROM	G17_109	BUFFALO - JAMESTOWN 345KV CKT 1	704.9	0.0997	106.7056	RIEL - ROSEAU 500KV CKT 1
16WP	16ALL	2	TO->FROM	G17_109	BUFFALO - JAMESTOWN 345KV CKT 1	716.7	0.09921	101.9802	FORBES - ROSEAU 500KV CKT 1
16WP	16ALL	2	TO->FROM	G17_109	BUFFALO - JAMESTOWN 345KV CKT 1	716.7	0.09921	102.1337	ROSEAU - ROSEAUM 2 500.00 500KV CKT 1
16WP	16ALL	2	TO->FROM	G17_109	BUFFALO - JAMESTOWN 345KV CKT 1	716.7	0.09921	102.1337	ROSEAU - ROSEAUM 2 500.00 500KV CKT 1
16WP	16ALL	2	TO->FROM	G17_109	BUFFALO - JAMESTOWN 345KV CKT 1	716.7	0.09921	102.3011	RIEL - ROSEAU 500KV CKT 1
20WP	16ALL	2	TO->FROM	G17_109	BUFFALO - JAMESTOWN 345KV CKT 1	716.8	0.0987	101.4928	FORBES - ROSEAU 500KV CKT 1
20WP	16ALL	2	TO->FROM	G17_109	BUFFALO - JAMESTOWN 345KV CKT 1	716.8	0.0987	101.6462	ROSEAU - ROSEAUM 2 500.00 500KV CKT 1
20WP	16ALL	2	TO->FROM	G17_109	BUFFALO - JAMESTOWN 345KV CKT 1	716.8	0.0987	101.6462	ROSEAU - ROSEAUM 2 500.00 500KV CKT 1
20WP	16ALL	2	TO->FROM	G17_109	BUFFALO - JAMESTOWN 345KV CKT 1	716.8	0.0987	101.8276	RIEL - ROSEAU 500KV CKT 1
25SP	16ALL	2	TO->FROM	G17_109	BUFFALO - JAMESTOWN 345KV CKT 1	704.9	0.09351	103.6692	System Intact
25SP	16ALL	2	TO->FROM	G17_109	BUFFALO - JAMESTOWN 345KV CKT 1	704.9	0.08175	108.5623	MANDAN 4 230.00 - MPC02100TAP4230.00 230KV CKT 1
25SP	00NR	2	TO->FROM	G17_109	BUFFALO - JAMESTOWN 345KV CKT 1	704.9	0.04937	113.108	CENTER - CNTSHNT3 345.00 345KV CKT Z1
25SP	00NR	2	TO->FROM	G17_109	BUFFALO - JAMESTOWN 345KV CKT 1	704.9	0.04937	113.108	CNTSHNT3 345.00 - PRAIRIE3 345.00 345KV CKT 1
20SP	00NR	2	TO->FROM	G17_109	BUFFALO - JAMESTOWN 345KV CKT 1	704.7	0.04927	109.3325	CENTER - CNTSHNT3 345.00 345KV CKT Z1
20SP	00NR	2	TO->FROM	G17_109	BUFFALO - JAMESTOWN 345KV CKT 1	704.7	0.04927	109.3325	CNTSHNT3 345.00 - PRAIRIE3 345.00 345KV CKT 1
17SP	00NR	2	TO->FROM	G17_109	BUFFALO - JAMESTOWN 345KV CKT 1	705	0.04898	107.3012	CENTER - CNTSHNT3 345.00 345KV CKT Z1
17SP	00NR	2	TO->FROM	G17_109	BUFFALO - JAMESTOWN 345KV CKT 1	705	0.04898	107.3012	CNTSHNT3 345.00 - PRAIRIE3 345.00 345KV CKT 1

SEASON	GROUP	SCENARIO	DIRECTION	SOURCE	MONITORED ELEMENT	RATE (MVA)	TDF	CONTINGENCY LOADING %	CONTINGENCY
25SP	00NR	2	TO->FROM	G17_109	BUFFALO - JAMESTOWN 345KV CKT 1	704.9	0.04891	102.3055	P12:345:UMZB:# 103 #: BD IN SD. LOSS OF LINE
25SP	00NR	2	TO->FROM	G17_109	BUFFALO - JAMESTOWN 345KV CKT 1	704.9	0.04873	102.4108	FTTHOM1-LNX3345.00 - G16-017-TAP 345.00 345KV CKT 1
25SP	00NR	2	TO->FROM	G17_109	BUFFALO - JAMESTOWN 345KV CKT 1	704.9	0.04873	102.4108	FT THOMPSON - FTTHOM1-LNX3345.00 345KV CKT Z
25SP	00NR	2	TO->FROM	G17_109	BUFFALO - JAMESTOWN 345KV CKT 1	704.9	0.04798	102.3342	LELAND OLDS - LELAND1-LNX3345.00 345KV CKT Z
25SP	00NR	2	TO->FROM	G17_109	BUFFALO - JAMESTOWN 345KV CKT 1	704.9	0.04798	102.3484	P12:345:UMZB:# 109 #: LOS GRT IN ND. LOS GRT
17G	16NR	2	TO->FROM	G17_109	BUFFALO - JAMESTOWN 345KV CKT 1	703.9	0.04617	106.8581	CENTER - CNTSHNT3 345.00 345KV CKT Z1
17G	16NR	2	TO->FROM	G17_109	BUFFALO - JAMESTOWN 345KV CKT 1	703.9	0.04617	106.8581	CNTSHNT3 345.00 - PRAIRIE3 345.00 345KV CKT 1
20SP	00NR	2	TO->FROM	G17_109	BUFFALO - JAMESTOWN 345KV CKT 1	704.7	0.04578	112.8636	FORBES - ROSEAU 500KV CKT 1
20SP	00NR	2	TO->FROM	G17_109	BUFFALO - JAMESTOWN 345KV CKT 1	704.7	0.04578	113.3035	ROSEAU - ROSEAUM 2 500.00 500KV CKT 1
20SP	00NR	2	TO->FROM	G17_109	BUFFALO - JAMESTOWN 345KV CKT 1	704.7	0.04578	113.3035	ROSEAU - ROSEAUM 2 500.00 500KV CKT 1
20SP	00NR	2	TO->FROM	G17_109	BUFFALO - JAMESTOWN 345KV CKT 1	704.7	0.04578	113.7292	RIEL - ROSEAU 500KV CKT 1
25SP	00NR	2	TO->FROM	G17_109	BUFFALO - JAMESTOWN 345KV CKT 1	704.9	0.04577	114.4625	FORBES - ROSEAU 500KV CKT 1
25SP	00NR	2	TO->FROM	G17_109	BUFFALO - JAMESTOWN 345KV CKT 1	704.9	0.04577	114.8456	ROSEAU - ROSEAUM 2 500.00 500KV CKT 1
25SP	00NR	2	TO->FROM	G17_109	BUFFALO - JAMESTOWN 345KV CKT 1	704.9	0.04577	114.8456	ROSEAU - ROSEAUM 2 500.00 500KV CKT 1
25SP	00NR	2	TO->FROM	G17_109	BUFFALO - JAMESTOWN 345KV CKT 1	704.9	0.04577	115.2286	RIEL - ROSEAU 500KV CKT 1
17SP	00NR	2	TO->FROM	G17_109	BUFFALO - JAMESTOWN 345KV CKT 1	705	0.04552	111.1016	FORBES - ROSEAU 500KV CKT 1
17SP	00NR	2	TO->FROM	G17_109	BUFFALO - JAMESTOWN 345KV CKT 1	705	0.04552	111.5272	ROSEAU - ROSEAUM 2 500.00 500KV CKT 1
17SP	00NR	2	TO->FROM	G17_109	BUFFALO - JAMESTOWN 345KV CKT 1	705	0.04552	111.5272	ROSEAU - ROSEAUM 2 500.00 500KV CKT 1
17SP	00NR	2	TO->FROM	G17_109	BUFFALO - JAMESTOWN 345KV CKT 1	705	0.04552	111.9385	RIEL - ROSEAU 500KV CKT 1
25SP	00NR	2	TO->FROM	G17_109	BUFFALO - JAMESTOWN 345KV CKT 1	704.9	0.04525	102.1677	SQUARE BUTTE - STANTON 230KV CKT 1
25SP	00NR	2	TO->FROM	G17_109	BUFFALO - JAMESTOWN 345KV CKT 1	704.9	0.04524	102.2665	G09_001IST 345.00 - WATERTOWN 345KV CKT 1
25SP	00NR	2	TO->FROM	G17_109	BUFFALO - JAMESTOWN 345KV CKT 1	704.9	0.04512	104.0769	FARGO - SHEYNNE 230KV CKT 1
20SP	00NR	2	TO->FROM	G17_109	BUFFALO - JAMESTOWN 345KV CKT 1	704.7	0.04508	101.5788	FARGO - SHEYNNE 230KV CKT 1
25SP	00NR	2	TO->FROM	G17_109	BUFFALO - JAMESTOWN 345KV CKT 1	704.9	0.04485	102.7312	FARGO - JAMES TOWN 230KV CKT 1
25SP	00NR	2	TO->FROM	G17_109	BUFFALO - JAMESTOWN 345KV CKT 1	704.9	0.04482	102.134	PRAIRIE - WINGER 230KV CKT 1
25SP	00NR	2	TO->FROM	G17_109	BUFFALO - JAMESTOWN 345KV CKT 1	704.9	0.0448	102.6154	FARGO - JAMES TOWN 230KV CKT 2
25SP	00NR	2	TO->FROM	G17_109	BUFFALO - JAMESTOWN 345KV CKT 1	704.9	0.0435	102.1166	GRPRAR1-LNX3345.00 - HOLT.CO3 345.00 345KV CKT 1
25SP	00NR	2	TO->FROM	G17_109	BUFFALO - JAMESTOWN 345KV CKT 1	704.9	0.0435	102.145	GRPRAR1-LNX3345.00 - YANKTON 345KV CKT Z
17G	16NR	2	TO->FROM	G17_109	BUFFALO - JAMESTOWN 345KV CKT 1	703.9	0.04283	107.4734	FORBES - ROSEAU 500KV CKT 1
17G	16NR	2	TO->FROM	G17_109	BUFFALO - JAMESTOWN 345KV CKT 1	703.9	0.04283	107.7576	ROSEAU - ROSEAUM 2 500.00 500KV CKT 1
17G	16NR	2	TO->FROM	G17_109	BUFFALO - JAMESTOWN 345KV CKT 1	703.9	0.04283	107.7576	ROSEAU - ROSEAUM 2 500.00 500KV CKT 1
17G	16NR	2	TO->FROM	G17_109	BUFFALO - JAMESTOWN 345KV CKT 1	703.9	0.04283	108.0417	RIEL - ROSEAU 500KV CKT 1
25SP	00NR	2	TO->FROM	G17_109	BUFFALO - JAMESTOWN 345KV CKT 1	704.9	0.04177	105.0882	HANKINSON - WAHPETON 230KV CKT 1
20SP	00NR	2	TO->FROM	G17_109	BUFFALO - JAMESTOWN 345KV CKT 1	704.7	0.04172	102.1925	HANKINSON - WAHPETON 230KV CKT 1
25SP	16ALL	2	FROM->TO	G17_109	BUFFALO (BUFFALO3) 345/115/41.6KV TRANSFORMER CKT 1	222.1	0.03045	120.8302	BISON 3 345.00 - BUFFALO 345KV CKT 1
25SP	16ALL	2	FROM->TO	G17_109	BUFFALO (BUFFALO3) 345/115/41.6KV TRANSFORMER CKT 1	221.8	0.03045	118.9648	BISON 3 345.00 - BUFFALO 345KV CKT 1
17SP	16ALL	2	FROM->TO	G17_109	BUFFALO (BUFFALO3) 345/115/41.6KV TRANSFORMER CKT 1	222.6	0.03039	113.0009	BISON 3 345.00 - BUFFALO 345KV CKT 1
17SP	16ALL	2	FROM->TO	G17_109	BUFFALO (BUFFALO3) 345/115/41.6KV TRANSFORMER CKT 1	222.5	0.03039	111.2539	BISON 3 345.00 - BUFFALO 345KV CKT 1
20SP	16ALL	2	FROM->TO	G17_109	BUFFALO (BUFFALO3) 345/115/41.6KV TRANSFORMER CKT 1	222	0.03039	114.836	BISON 3 345.00 - BUFFALO 345KV CKT 1
20SP	16ALL	2	FROM->TO	G17_109	BUFFALO (BUFFALO3) 345/115/41.6KV TRANSFORMER CKT 1	221.8	0.03039	113.046	BISON 3 345.00 - BUFFALO 345KV CKT 1
17G	16ALL	2	FROM->TO	G17_109	BUFFALO (BUFFALO3) 345/115/41.6KV TRANSFORMER CKT 1	222.6	0.03005	107.2327	BISON 3 345.00 - BUFFALO 345KV CKT 1
17G	16ALL	2	FROM->TO	G17_109	BUFFALO (BUFFALO3) 345/115/41.6KV TRANSFORMER CKT 1	222.4	0.03005	105.036	BISON 3 345.00 - BUFFALO 345KV CKT 1
16WP	16ALL	2	FROM->TO	G17_109	BUFFALO (BUFFALO3) 345/115/41.6KV TRANSFORMER CKT 1	222.2	0.02992	111.8164	BISON 3 345.00 - BUFFALO 345KV CKT 1
16WP	16ALL	2	FROM->TO	G17_109	BUFFALO (BUFFALO3) 345/115/41.6KV TRANSFORMER CKT 1	221.8	0.02992	108.7719	BISON 3 345.00 - BUFFALO 345KV CKT 1
20WP	16ALL	2	FROM->TO	G17_109	BUFFALO (BUFFALO3) 345/115/41.6KV TRANSFORMER CKT 1	222.1	0.02983	111.9406	BISON 3 345.00 - BUFFALO 345KV CKT 1
20WP	16ALL	2	FROM->TO	G17_109	BUFFALO (BUFFALO3) 345/115/41.6KV TRANSFORMER CKT 1	221.8	0.02983	108.7556	BISON 3 345.00 - BUFFALO 345KV CKT 1
17SP	16ALL	2	FROM->TO	G17_109	CIRCLE - DAWSON CREEK 115KV CKT 1	77.7	0.04377	101.601	CULBERTSN E7115.00 - WILISTON 115KV CKT 1
17G	16ALL	2	FROM->TO	G17_109	CIRCLE - DAWSON CREEK 115KV CKT 1	78.7	0.04333	104.2795	CULBERTSN E7115.00 - WILISTON 115KV CKT 1
25SP	16ALL	2	TO->FROM	G17_109	CIRCLE - G12_012IST 115.00 115KV CKT 1	77.2	0.04386	118.4922	CULBERTSN E7115.00 - WILISTON 115KV CKT 1
20SP	16ALL	2	TO->FROM	G17_109	CIRCLE - G12_012IST 115.00 115KV CKT 1	77.5	0.04381	119.0452	CULBERTSN E7115.00 - WILISTON 115KV CKT 1
17SP	16ALL	2	TO->FROM	G17_109	CIRCLE - G12_012IST 115.00 115KV CKT 1	77.2	0.04377	120.7824	CULBERTSN E7115.00 - WILISTON 115KV CKT 1
20WP	16ALL	2	TO->FROM	G17_109	CIRCLE - G12_012IST 115.00 115KV CKT 1	86.9	0.04355	115.3694	CULBERTSN E7115.00 - WILISTON 115KV CKT 1
16WP	16ALL	2	TO->FROM	G17_109	CIRCLE - G12_012IST 115.00 115KV CKT 1	86.5	0.0435	108.2451	CULBERTSN E7115.00 - WILISTON 115KV CKT 1
17G	16ALL	2	TO->FROM	G17_109	CIRCLE - G12_012IST 115.00 115KV CKT 1	76.7	0.04333	127.9896	CULBERTSN E7115.00 - WILISTON 115KV CKT 1
20L	16ALL	2	TO->FROM	G17_109	CIRCLE - G12_012IST 115.00 115KV CKT 1	77.3	0.04277	114.0285	CULBERTSN E7115.00 - WILISTON 115KV CKT 1

SEASON	GROUP	SCENARIO	DIRECTION	SOURCE	MONITORED ELEMENT	RATE (MVA)	TDF	CONTINGENCY LOADING %	CONTINGENCY
20SP	16ALL	2	FROM->TO	G17_109	CULBERTSN E7115.00 - WILISTON 115KV CKT 1	126.6	0.18988	100.8594	BELFIELD - MEDORA 230KV CKT 1
20SP	16ALL	2	FROM->TO	G17_109	CULBERTSN E7115.00 - WILISTON 115KV CKT 1	126.6	0.18988	102.6762	BEAVERHILL4 230.00 - MEDORA 230KV CKT 1
17SP	16ALL	2	FROM->TO	G17_109	CULBERTSN E7115.00 - WILISTON 115KV CKT 1	125.9	0.1896	110.0016	BEAVERHILL4 230.00 - DAWSON CREEK 230KV CKT 1
17SP	16ALL	2	FROM->TO	G17_109	CULBERTSN E7115.00 - WILISTON 115KV CKT 1	125.9	0.1896	119.0564	BELFIELD - MEDORA 230KV CKT 1
17SP	16ALL	2	FROM->TO	G17_109	CULBERTSN E7115.00 - WILISTON 115KV CKT 1	125.9	0.1896	120.8832	BEAVERHILL4 230.00 - MEDORA 230KV CKT 1
20WP	16ALL	2	FROM->TO	G17_109	CULBERTSN E7115.00 - WILISTON 115KV CKT 1	128.8	0.18958	105.3323	BEAVERHILL4 230.00 - DAWSON CREEK 230KV CKT 1
20WP	16ALL	2	FROM->TO	G17_109	CULBERTSN E7115.00 - WILISTON 115KV CKT 1	128.8	0.18958	113.2516	BELFIELD - MEDORA 230KV CKT 1
20WP	16ALL	2	FROM->TO	G17_109	CULBERTSN E7115.00 - WILISTON 115KV CKT 1	128.8	0.18958	115.4255	BEAVERHILL4 230.00 - MEDORA 230KV CKT 1
16WP	16ALL	2	FROM->TO	G17_109	CULBERTSN E7115.00 - WILISTON 115KV CKT 1	129	0.18919	109.1659	BEAVERHILL4 230.00 - DAWSON CREEK 230KV CKT 1
16WP	16ALL	2	FROM->TO	G17_109	CULBERTSN E7115.00 - WILISTON 115KV CKT 1	129	0.18919	117.4605	BELFIELD - MEDORA 230KV CKT 1
16WP	16ALL	2	FROM->TO	G17_109	CULBERTSN E7115.00 - WILISTON 115KV CKT 1	129	0.18919	119.5535	BEAVERHILL4 230.00 - MEDORA 230KV CKT 1
17G	16ALL	2	FROM->TO	G17_109	CULBERTSN E7115.00 - WILISTON 115KV CKT 1	127	0.18885	114.7937	BEAVERHILL4 230.00 - DAWSON CREEK 230KV CKT 1
17G	16ALL	2	FROM->TO	G17_109	CULBERTSN E7115.00 - WILISTON 115KV CKT 1	127	0.18885	124.085	BELFIELD - MEDORA 230KV CKT 1
17G	16ALL	2	FROM->TO	G17_109	CULBERTSN E7115.00 - WILISTON 115KV CKT 1	127	0.18885	125.8173	BEAVERHILL4 230.00 - MEDORA 230KV CKT 1
20L	16ALL	2	FROM->TO	G17_109	CULBERTSN E7115.00 - WILISTON 115KV CKT 1	125.8	0.18781	104.6582	BELFIELD - MEDORA 230KV CKT 1
20L	16ALL	2	FROM->TO	G17_109	CULBERTSN E7115.00 - WILISTON 115KV CKT 1	125.8	0.18781	105.7711	BEAVERHILL4 230.00 - MEDORA 230KV CKT 1
20WP	16ALL	2	FROM->TO	G17_109	CULBERTSN E7115.00 - WILISTON 115KV CKT 1	128.8	0.14437	104.2329	BELFIELD - CHARLIE CREEK 345KV CKT 1
17SP	16ALL	2	FROM->TO	G17_109	CULBERTSN E7115.00 - WILISTON 115KV CKT 1	125.9	0.14431	105.4297	BELFIELD - CHARLIE CREEK 345KV CKT 1
16WP	16ALL	2	FROM->TO	G17_109	CULBERTSN E7115.00 - WILISTON 115KV CKT 1	129	0.144	107.6806	BELFIELD - CHARLIE CREEK 345KV CKT 1
17G	16ALL	2	FROM->TO	G17_109	CULBERTSN E7115.00 - WILISTON 115KV CKT 1	127	0.14366	115.2567	BELFIELD - CHARLIE CREEK 345KV CKT 1
17SP	16ALL	2	FROM->TO	G17_109	CULBERTSN E7115.00 - WILISTON 115KV CKT 1	125.9	0.14254	103.2121	BAKER - LTLMISS 230KV CKT 1
20WP	16ALL	2	FROM->TO	G17_109	CULBERTSN E7115.00 - WILISTON 115KV CKT 1	128.8	0.13801	107.0652	DAWSON CREEK - LEWIS & CLARK 115KV CKT 1
20WP	16ALL	2	FROM->TO	G17_109	CULBERTSN E7115.00 - WILISTON 115KV CKT 1	128.8	0.13801	109.1615	LEWIS & CLARK - RICHLAND 115KV CKT 1
17SP	16ALL	2	FROM->TO	G17_109	CULBERTSN E7115.00 - WILISTON 115KV CKT 1	125.9	0.13793	107.5266	DAWSON CREEK - LEWIS & CLARK 115KV CKT 1
17SP	16ALL	2	FROM->TO	G17_109	CULBERTSN E7115.00 - WILISTON 115KV CKT 1	125.9	0.13793	109.9889	LEWIS & CLARK - RICHLAND 115KV CKT 1
16WP	16ALL	2	FROM->TO	G17_109	CULBERTSN E7115.00 - WILISTON 115KV CKT 1	129	0.13757	108.707	DAWSON CREEK - LEWIS & CLARK 115KV CKT 1
16WP	16ALL	2	FROM->TO	G17_109	CULBERTSN E7115.00 - WILISTON 115KV CKT 1	129	0.13757	110.8	LEWIS & CLARK - RICHLAND 115KV CKT 1
17G	16ALL	2	FROM->TO	G17_109	CULBERTSN E7115.00 - WILISTON 115KV CKT 1	127	0.13721	113.4551	LEWIS & CLARK - RICHLAND 115KV CKT 1
17G	16ALL	2	FROM->TO	G17_109	CULBERTSN E7115.00 - WILISTON 115KV CKT 1	127	0.13721	116.4472	DAWSON CREEK - LEWIS & CLARK 115KV CKT 1
17SP	16ALL	2	FROM->TO	G17_109	CULBERTSN E7115.00 - WILISTON 115KV CKT 1	125.9	0.12488	102.0683	FAIRVIEW - RICHLAND 115KV CKT 1
16WP	16ALL	2	FROM->TO	G17_109	CULBERTSN E7115.00 - WILISTON 115KV CKT 1	129	0.12453	103.1504	FAIRVIEW - RICHLAND 115KV CKT 1
20WP	16ALL	2	FROM->TO	G17_109	CULBERTSN E7115.00 - WILISTON 115KV CKT 1	128.8	0.12289	104.1584	DAWSON CREEK - MILES CITY EAST 230KV CKT 1
17SP	16ALL	2	FROM->TO	G17_109	CULBERTSN E7115.00 - WILISTON 115KV CKT 1	125.9	0.12285	105.0453	DAWSON CREEK - MILES CITY EAST 230KV CKT 1
16WP	16ALL	2	FROM->TO	G17_109	CULBERTSN E7115.00 - WILISTON 115KV CKT 1	129	0.12251	104.3504	DAWSON CREEK - MILES CITY EAST 230KV CKT 1
17G	16ALL	2	FROM->TO	G17_109	CULBERTSN E7115.00 - WILISTON 115KV CKT 1	127	0.12217	109.9055	DAWSON CREEK - MILES CITY EAST 230KV CKT 1
17SP	16ALL	2	FROM->TO	G17_109	CULBERTSN E7115.00 - WILISTON 115KV CKT 1	125.9	0.12099	102.3447	BOWMAN - RHAME 4 230.00 230KV CKT 1
17SP	16ALL	2	FROM->TO	G17_109	CULBERTSN E7115.00 - WILISTON 115KV CKT 1	125.9	0.12042	105.0612	BISON - MAURINE 230KV CKT 1
17SP	16ALL	2	FROM->TO	G17_109	CULBERTSN E7115.00 - WILISTON 115KV CKT 1	125.9	0.12042	105.4583	BISON - HETINGER 230KV CKT 1
20WP	16ALL	2	FROM->TO	G17_109	CULBERTSN E7115.00 - WILISTON 115KV CKT 1	128.8	0.12041	102.0652	BISON - MAURINE 230KV CKT 1
20WP	16ALL	2	FROM->TO	G17_109	CULBERTSN E7115.00 - WILISTON 115KV CKT 1	128.8	0.12041	103.1522	BISON - HETINGER 230KV CKT 1
16WP	16ALL	2	FROM->TO	G17_109	CULBERTSN E7115.00 - WILISTON 115KV CKT 1	129	0.12007	103.1225	BISON - MAURINE 230KV CKT 1
16WP	16ALL	2	FROM->TO	G17_109	CULBERTSN E7115.00 - WILISTON 115KV CKT 1	129	0.12007	103.5876	BISON - HETINGER 230KV CKT 1
17G	16ALL	2	FROM->TO	G17_109	CULBERTSN E7115.00 - WILISTON 115KV CKT 1	127	0.11971	110.463	BISON - MAURINE 230KV CKT 1
17G	16ALL	2	FROM->TO	G17_109	CULBERTSN E7115.00 - WILISTON 115KV CKT 1	127	0.11971	110.778	BISON - HETINGER 230KV CKT 1
20WP	16ALL	2	FROM->TO	G17_109	CULBERTSN E7115.00 - WILISTON 115KV CKT 1	128.8	0.1187	104.2081	BELFIELD - DAGLUM 4230.00 230KV CKT 1
17SP	16ALL	2	FROM->TO	G17_109	CULBERTSN E7115.00 - WILISTON 115KV CKT 1	125.9	0.11861	104.2859	BELFIELD - DAGLUM 4230.00 230KV CKT 1
16WP	16ALL	2	FROM->TO	G17_109	CULBERTSN E7115.00 - WILISTON 115KV CKT 1	129	0.11828	105.0884	BELFIELD - DAGLUM 4230.00 230KV CKT 1
17G	16ALL	2	FROM->TO	G17_109	CULBERTSN E7115.00 - WILISTON 115KV CKT 1	127	0.11797	111.7638	BELFIELD - DAGLUM 4230.00 230KV CKT 1
20SP	16ALL	2	FROM->TO	G17_109	CULBERTSN E7115.00 - WILISTON 115KV CKT 1	126.6	0.11451	100.1422	CIRCLE - G12_012IST 115.00 115KV CKT 1
17SP	16ALL	2	FROM->TO	G17_109	CULBERTSN E7115.00 - WILISTON 115KV CKT 1	125.9	0.11426	107.857	CIRCLE - DAWSON CREEK 115KV CKT 1
17SP	16ALL	2	FROM->TO	G17_109	CULBERTSN E7115.00 - WILISTON 115KV CKT 1	125.9	0.11426	112.2256	CIRCLE - G12_012IST 115.00 115KV CKT 1
20WP	16ALL	2	FROM->TO	G17_109	CULBERTSN E7115.00 - WILISTON 115KV CKT 1	128.8	0.11423	113.5621	CIRCLE - G12_012IST 115.00 115KV CKT 1
20WP	16ALL	2	FROM->TO	G17_109	CULBERTSN E7115.00 - WILISTON 115KV CKT 1	128.8	0.11414	102.4534	FT PECK - KPS10-FP7 115.00 115KV CKT 1
20WP	16ALL	2	FROM->TO	G17_109	CULBERTSN E7115.00 - WILISTON 115KV CKT 1	128.8	0.11414	102.4534	KPS10-FP7 115.00 115/6.9KV TRANSFORMER CKT 1
20WP	16ALL	2	FROM->TO	G17_109	CULBERTSN E7115.00 - WILISTON 115KV CKT 1	128.8	0.11414	102.823	PIONEER GEN7115.00 - STATELINEMW7115.00 115KV CKT Z

SEASON	GROUP	SCENARIO	DIRECTION	SOURCE	MONITORED ELEMENT	RATE (MVA)	TDF	CONTINGENCY LOADING %	CONTINGENCY
20WP	16ALL	2	FROM->TO	G17_109	CULBERTSN E7115.00 - WILISTON 115KV CKT 1	128.8	0.11414	103.4627	G15046_1 345.00 - TANDE 3345.00 345KV CKT 1
17SP	16ALL	2	FROM->TO	G17_109	CULBERTSN E7115.00 - WILISTON 115KV CKT 1	125.9	0.11408	103.6918	G15046_1 345.00 - TANDE 3345.00 345KV CKT 1
16WP	16ALL	2	FROM->TO	G17_109	CULBERTSN E7115.00 - WILISTON 115KV CKT 1	129	0.11387	105.6837	CIRCLE - DAWSON CREEK 115KV CKT 1
16WP	16ALL	2	FROM->TO	G17_109	CULBERTSN E7115.00 - WILISTON 115KV CKT 1	129	0.11387	111.7302	CIRCLE - G12_012IST 115.00 115KV CKT 1
16WP	16ALL	2	FROM->TO	G17_109	CULBERTSN E7115.00 - WILISTON 115KV CKT 1	129	0.11375	103.6558	G15046_1 345.00 - TANDE 3345.00 345KV CKT 1
17G	16ALL	2	FROM->TO	G17_109	CULBERTSN E7115.00 - WILISTON 115KV CKT 1	127	0.11353	114.0913	CIRCLE - DAWSON CREEK 115KV CKT 1
17G	16ALL	2	FROM->TO	G17_109	CULBERTSN E7115.00 - WILISTON 115KV CKT 1	127	0.11353	118.8945	CIRCLE - G12_012IST 115.00 115KV CKT 1
17G	16ALL	2	FROM->TO	G17_109	CULBERTSN E7115.00 - WILISTON 115KV CKT 1	127	0.11342	108.0189	NESET 7 115.00 115/34.5KV TRANSFORMER CKT 1
17G	16ALL	2	FROM->TO	G17_109	CULBERTSN E7115.00 - WILISTON 115KV CKT 1	127	0.11342	110.0661	G15046_1 345.00 - TANDE 3345.00 345KV CKT 1
20L	16ALL	2	FROM->TO	G17_109	CULBERTSN E7115.00 - WILISTON 115KV CKT 1	125.8	0.11269	101.5517	CIRCLE - G12_012IST 115.00 115KV CKT 1
20WP	16ALL	2	FROM->TO	G17_109	CULBERTSN E7115.00 - WILISTON 115KV CKT 1	128.8	0.1123	106.118	CHARLIE CREEK - PATENTGATE 3345.00 345KV CKT 1
20WP	16ALL	2	FROM->TO	G17_109	CULBERTSN E7115.00 - WILISTON 115KV CKT 1	128.8	0.11228	103.0124	CHAR.CK4 230.00 - WATFORD 230KV CKT 1
17SP	16ALL	2	FROM->TO	G17_109	CULBERTSN E7115.00 - WILISTON 115KV CKT 1	125.9	0.11211	106.4559	CHAR.CK4 230.00 - WATFORD 230KV CKT 1
16WP	16ALL	2	FROM->TO	G17_109	CULBERTSN E7115.00 - WILISTON 115KV CKT 1	129	0.11176	102.3907	JUDSON 4230.00 - WILLISTON 230KV CKT 1
16WP	16ALL	2	FROM->TO	G17_109	CULBERTSN E7115.00 - WILISTON 115KV CKT 1	129	0.11176	102.3907	JUDSON 3345.00 (JUDSON KU1A) 345/230/13.8KV TRANSFORMER CKT 1
16WP	16ALL	2	FROM->TO	G17_109	CULBERTSN E7115.00 - WILISTON 115KV CKT 1	129	0.11175	107.5845	CHAR.CK4 230.00 - WATFORD 230KV CKT 1
17G	16ALL	2	FROM->TO	G17_109	CULBERTSN E7115.00 - WILISTON 115KV CKT 1	127	0.1114	108.8504	JUDSON 4230.00 - WILLISTON 230KV CKT 1
17G	16ALL	2	FROM->TO	G17_109	CULBERTSN E7115.00 - WILISTON 115KV CKT 1	127	0.1114	108.8504	JUDSON 3345.00 (JUDSON KU1A) 345/230/13.8KV TRANSFORMER CKT 1
17G	16ALL	2	FROM->TO	G17_109	CULBERTSN E7115.00 - WILISTON 115KV CKT 1	127	0.11134	114.4221	CHAR.CK4 230.00 - WATFORD 230KV CKT 1
20SP	16ALL	2	FROM->TO	G17_109	CULBERTSN E7115.00 - WILISTON 115KV CKT 1	126.6	0.05478	102.0316	COALHILL4 230.00 - FT PECK 230KV CKT 1
17SP	16ALL	2	FROM->TO	G17_109	CULBERTSN E7115.00 - WILISTON 115KV CKT 1	125.9	0.05453	118.6529	COALHILL4 230.00 - FT PECK 230KV CKT 1
17SP	16ALL	2	FROM->TO	G17_109	CULBERTSN E7115.00 - WILISTON 115KV CKT 1	125.9	0.05453	118.6529	COALHILL4 230.00 - G17109_T(P) 230.00 230KV CKT 1
20WP	16ALL	2	FROM->TO	G17_109	CULBERTSN E7115.00 - WILISTON 115KV CKT 1	128.8	0.05413	103.6584	COALHILL4 230.00 - G17109_T(P) 230.00 230KV CKT 1
20WP	16ALL	2	FROM->TO	G17_109	CULBERTSN E7115.00 - WILISTON 115KV CKT 1	128.8	0.05413	111.4223	COALHILL4 230.00 - FT PECK 230KV CKT 1
16WP	16ALL	2	FROM->TO	G17_109	CULBERTSN E7115.00 - WILISTON 115KV CKT 1	129	0.05376	113.6248	COALHILL4 230.00 - FT PECK 230KV CKT 1
16WP	16ALL	2	FROM->TO	G17_109	CULBERTSN E7115.00 - WILISTON 115KV CKT 1	129	0.05376	113.6248	COALHILL4 230.00 - G17109_T(P) 230.00 230KV CKT 1
17G	16ALL	2	FROM->TO	G17_109	CULBERTSN E7115.00 - WILISTON 115KV CKT 1	127	0.05322	121.9339	COALHILL4 230.00 - G17109_T(P) 230.00 230KV CKT 1
17G	16ALL	2	FROM->TO	G17_109	CULBERTSN E7115.00 - WILISTON 115KV CKT 1	127	0.05322	121.9339	COALHILL4 230.00 - FT PECK 230KV CKT 1
17G	16ALL	2	TO->FROM	G17_109	CULBERTSON - POPLAR 115KV CKT 1	88	0.18913	100.3409	BEAVERHILL4 230.00 - MEDORA 230KV CKT 1
17SP	16ALL	2	FROM->TO	G17_109	DAWSON CREEK - FALLON 115KV CKT 1	87.7	0.08224	114.5724	DAWSON CREEK - MILES CITY EAST 230KV CKT 1
25SP	16ALL	2	FROM->TO	G17_109	DAWSON CREEK - FALLON 115KV CKT 1	88	0.08215	134.0409	DAWSON CREEK - MILES CITY EAST 230KV CKT 1
16WP	16ALL	2	FROM->TO	G17_109	DAWSON CREEK - FALLON 115KV CKT 1	87.9	0.08211	106.8623	DAWSON CREEK - MILES CITY EAST 230KV CKT 1
20SP	16ALL	2	FROM->TO	G17_109	DAWSON CREEK - FALLON 115KV CKT 1	87.9	0.0821	124.8419	DAWSON CREEK - MILES CITY EAST 230KV CKT 1
20WP	16ALL	2	FROM->TO	G17_109	DAWSON CREEK - FALLON 115KV CKT 1	88	0.08195	109.6318	DAWSON CREEK - MILES CITY EAST 230KV CKT 1
20L	16ALL	2	FROM->TO	G17_109	DAWSON CREEK - FALLON 115KV CKT 1	87.7	0.08154	102.8643	DAWSON CREEK - MILES CITY EAST 230KV CKT 1
17G	16ALL	2	FROM->TO	G17_109	DAWSON CREEK - LEWIS & CLARK 115KV CKT 1	100.9	0.19481	101.0624	BAKER - LTLMISS 230KV CKT 1
17G	16ALL	2	FROM->TO	G17_109	DAWSON CREEK - LEWIS & CLARK 115KV CKT 1	100.9	0.19423	112.5312	BELFIELD - CHARLIE CREEK 345KV CKT 1
17SP	16ALL	2	FROM->TO	G17_109	DAWSON CREEK - LEWIS & CLARK 115KV CKT 1	101	0.1712	101.4455	CULBERTSN E7115.00 - WILISTON 115KV CKT 1
17G	16ALL	2	FROM->TO	G17_109	DAWSON CREEK - LEWIS & CLARK 115KV CKT 1	100.9	0.17077	100.3845	CULBERTSN E7115.00 - CULBERTSON 115KV CKT 1
17G	16ALL	2	FROM->TO	G17_109	DAWSON CREEK - LEWIS & CLARK 115KV CKT 1	100.9	0.17077	104.7453	CULBERTSON - POPLAR 115KV CKT 1
17G	16ALL	2	FROM->TO	G17_109	DAWSON CREEK - LEWIS & CLARK 115KV CKT 1	100.9	0.17077	107.3221	POPLAR - WOLF POINT 115KV CKT 1
17G	16ALL	2	FROM->TO	G17_109	DAWSON CREEK - LEWIS & CLARK 115KV CKT 1	100.9	0.1707	123.2468	CULBERTSN E7115.00 - WILISTON 115KV CKT 1
17G	16ALL	2	FROM->TO	G17_109	DAWSON CREEK - LEWIS & CLARK 115KV CKT 1	100.9	0.15226	102.0535	BISON - MAURINE 230KV CKT 1
17G	16ALL	2	FROM->TO	G17_109	DAWSON CREEK - LEWIS & CLARK 115KV CKT 1	100.9	0.15226	102.9455	BISON - HETINGER 230KV CKT 1
17G	16ALL	2	FROM->TO	G17_109	DAWSON CREEK - LEWIS & CLARK 115KV CKT 1	100.9	0.14993	106.4817	BELFIELD - DAGLUM 4230.00 230KV CKT 1
17G	16ALL	2	FROM->TO	G17_109	DAWSON CREEK - LEWIS & CLARK 115KV CKT 1	100.9	0.13919	100.3013	CHAR.CK4 230.00 - WATFORD 230KV CKT 1
17G	16ALL	2	FROM->TO	G17_109	DAWSON CREEK - LEWIS & CLARK 115KV CKT 1	100.9	0.13634	108.7096	CHARLIE CREEK (CCR KV2A) 345/115/13.8KV TRANSFORMER CKT 1
25SP	16ALL	2	FROM->TO	G17_109	DICKINSON (DICKNSON2) 230/115/13.8KV TRANSFORMER CKT 2	125	0.04076	102.9536	DICKINSON (KW1A 100) 230/115/13.8KV TRANSFORMER CKT 1
25SP	16ALL	2	FROM->TO	G17_109	DICKINSON (KW1A 100) 230/115/13.8KV TRANSFORMER CKT 1	125	0.04076	101.5936	DICKINSON (DICKNSON2) 230/115/13.8KV TRANSFORMER CKT 2
25SP	16ALL	2	FROM->TO	G17_109	DICKINSON (KW1A 100) 230/115/13.8KV TRANSFORMER CKT 1	125	0.04076	101.6736	DICKINSON (DICKNSON2) 230/115/13.8KV TRANSFORMER CKT 2
20L	16ALL	2	TO->FROM	G17_109	ELK CREEK - NEWELL 115KV CKT 1	89.3	0.05693	101.8903	MAURINE - NUNDRWD-LNX3230.00 230KV CKT 1
20L	16ALL	2	TO->FROM	G17_109	ELK CREEK - NEWELL 115KV CKT 1	89.3	0.05693	101.8903	NUNDRWD - NUNDRWD-LNX3230.00 230KV CKT Z
20L	16ALL	2	FROM->TO	G17_109	ELK CREEK - RAPID CITY 115KV CKT 1	87.2	0.05693	100.1009	MAURINE - NUNDRWD-LNX3230.00 230KV CKT 1
20L	16ALL	2	FROM->TO	G17_109	ELK CREEK - RAPID CITY 115KV CKT 1	87.2	0.05693	100.1009	NUNDRWD - NUNDRWD-LNX3230.00 230KV CKT Z
25SP	16ALL	2	TO->FROM	G17_109	ELLENDLMVP4 230.00 - J316_SUB 230.00 230KV CKT 1	342.4	0.06118	138.4906	ELLENDLMVP4 230.00 - MERRCRT4 230.00 230KV CKT 1

SEASON	GROUP	SCENARIO	DIRECTION	SOURCE	MONITORED ELEMENT	RATE (MVA)	TDF	CONTINGENCY LOADING %	CONTINGENCY
20SP	16ALL	2	TO->FROM	G17_109	ELLENDLMVP4 230.00 - J316_SUB 230.00 230KV CKT 1	341.9	0.061	134.9272	ELLENDLMVP4 230.00 - MERRCRT4 230.00 230KV CKT 1
17SP	16ALL	2	TO->FROM	G17_109	ELLENDLMVP4 230.00 - J316_SUB 230.00 230KV CKT 1	341.7	0.06088	142.312	ELLENDLMVP4 230.00 - MERRCRT4 230.00 230KV CKT 1
20WP	16ALL	2	TO->FROM	G17_109	ELLENDLMVP4 230.00 - J316_SUB 230.00 230KV CKT 1	342	0.06014	123.2655	ELLENDLMVP4 230.00 - MERRCRT4 230.00 230KV CKT 1
16WP	16ALL	2	TO->FROM	G17_109	ELLENDLMVP4 230.00 - J316_SUB 230.00 230KV CKT 1	340.8	0.06003	134.0211	ELLENDLMVP4 230.00 - MERRCRT4 230.00 230KV CKT 1
17G	16ALL	2	TO->FROM	G17_109	ELLENDLMVP4 230.00 - J316_SUB 230.00 230KV CKT 1	341.7	0.05972	138.1364	ELLENDLMVP4 230.00 - MERRCRT4 230.00 230KV CKT 1
20L	16ALL	2	TO->FROM	G17_109	ELLENDLMVP4 230.00 - J316_SUB 230.00 230KV CKT 1	342.3	0.0564	117.5203	ELLENDLMVP4 230.00 - MERRCRT4 230.00 230KV CKT 1
25SP	16ALL	2	TO->FROM	G17_109	ELLENDLMVP4 230.00 - J316_SUB 230.00 230KV CKT 1	342.4	0.04132	100.9708	GROTON-LNX3 345.00 - LELAND1-LNX3345.00 345KV CKT 1
25SP	16ALL	2	TO->FROM	G17_109	ELLENDLMVP4 230.00 - J316_SUB 230.00 230KV CKT 1	342.4	0.04132	100.9708	GROTON - GROTON-LNX3 345.00 345KV CKT Z
25SP	16ALL	2	TO->FROM	G17_109	ELLENDLMVP4 230.00 - J316_SUB 230.00 230KV CKT 1	342.4	0.04132	101.146	P12:345:UMZB:# 109 #: LOS GRT IN ND. LOS GRT
25SP	16ALL	2	TO->FROM	G17_109	ELLENDLMVP4 230.00 - J316_SUB 230.00 230KV CKT 1	342.4	0.04132	101.2044	LELAND OLDS - LELAND1-LNX3345.00 345KV CKT Z
17SP	16ALL	2	TO->FROM	G17_109	ELLENDLMVP4 230.00 - J316_SUB 230.00 230KV CKT 1	341.7	0.04097	103.2192	GROTON-LNX3 345.00 - LELAND1-LNX3345.00 345KV CKT 1
17SP	16ALL	2	TO->FROM	G17_109	ELLENDLMVP4 230.00 - J316_SUB 230.00 230KV CKT 1	341.7	0.04097	103.2192	GROTON - GROTON-LNX3 345.00 345KV CKT Z
17SP	16ALL	2	TO->FROM	G17_109	ELLENDLMVP4 230.00 - J316_SUB 230.00 230KV CKT 1	341.7	0.04097	103.3948	P12:345:UMZB:# 109 #: LOS GRT IN ND. LOS GRT
17SP	16ALL	2	TO->FROM	G17_109	ELLENDLMVP4 230.00 - J316_SUB 230.00 230KV CKT 1	341.7	0.04097	103.4826	LELAND OLDS - LELAND1-LNX3345.00 345KV CKT Z
25SP	16ALL	2	TO->FROM	G17_109	ELLENDLMVP4 230.00 - J316_SUB 230.00 230KV CKT 1	342.4	0.0405	102.6472	CENTER - JAMESTOWN 345KV CKT 1
20SP	16ALL	2	TO->FROM	G17_109	ELLENDLMVP4 230.00 - J316_SUB 230.00 230KV CKT 1	341.9	0.04039	100.0339	CENTER - JAMESTOWN 345KV CKT 1
17G	16ALL	2	TO->FROM	G17_109	ELLENDLMVP4 230.00 - J316_SUB 230.00 230KV CKT 1	341.7	0.04016	100.5783	GROTON-LNX3 345.00 - LELAND1-LNX3345.00 345KV CKT 1
17G	16ALL	2	TO->FROM	G17_109	ELLENDLMVP4 230.00 - J316_SUB 230.00 230KV CKT 1	341.7	0.04016	100.5783	GROTON - GROTON-LNX3 345.00 345KV CKT Z
17G	16ALL	2	TO->FROM	G17_109	ELLENDLMVP4 230.00 - J316_SUB 230.00 230KV CKT 1	341.7	0.04016	100.7539	P12:345:UMZB:# 109 #: LOS GRT IN ND. LOS GRT
17G	16ALL	2	TO->FROM	G17_109	ELLENDLMVP4 230.00 - J316_SUB 230.00 230KV CKT 1	341.7	0.04016	100.8417	LELAND OLDS - LELAND1-LNX3345.00 345KV CKT Z
17SP	16ALL	2	TO->FROM	G17_109	ELLENDLMVP4 230.00 - J316_SUB 230.00 230KV CKT 1	341.7	0.04015	104.4027	CENTER - JAMESTOWN 345KV CKT 1
25SP	16ALL	2	TO->FROM	G17_109	ELLENDLMVP4 230.00 - J316_SUB 230.00 230KV CKT 1	342.4	0.04007	105.4392	BUFFALO - JAMESTOWN 345KV CKT 1
20SP	16ALL	2	TO->FROM	G17_109	ELLENDLMVP4 230.00 - J316_SUB 230.00 230KV CKT 1	341.9	0.03996	102.8605	BUFFALO - JAMESTOWN 345KV CKT 1
17SP	16ALL	2	TO->FROM	G17_109	ELLENDLMVP4 230.00 - J316_SUB 230.00 230KV CKT 1	341.7	0.0398	101.1542	BRDLAND-LNX3345.00 - HURON 345KV CKT Z
17SP	16ALL	2	TO->FROM	G17_109	ELLENDLMVP4 230.00 - J316_SUB 230.00 230KV CKT 1	341.7	0.0398	101.1542	ANTELOP-LNX3345.00 - BRDLAND-LNX3345.00 345KV CKT 1
17SP	16ALL	2	TO->FROM	G17_109	ELLENDLMVP4 230.00 - J316_SUB 230.00 230KV CKT 1	341.7	0.0398	101.1542	HURON (BD 90343-A) 345/230/13.8KV TRANSFORMER CKT 1
17SP	16ALL	2	TO->FROM	G17_109	ELLENDLMVP4 230.00 - J316_SUB 230.00 230KV CKT 1	341.7	0.0398	101.1542	P13:345:UMZB:# 244 #: BD IN SD. LOSS OF TX
17SP	16ALL	2	TO->FROM	G17_109	ELLENDLMVP4 230.00 - J316_SUB 230.00 230KV CKT 1	341.7	0.0398	101.1542	BROADLAND - HURON 230KV CKT 1
17SP	16ALL	2	TO->FROM	G17_109	ELLENDLMVP4 230.00 - J316_SUB 230.00 230KV CKT 1	341.7	0.0398	101.2713	ANTELOP-LNX3345.00 - ANTELOPE VALLEY 345KV CKT Z
17SP	16ALL	2	TO->FROM	G17_109	ELLENDLMVP4 230.00 - J316_SUB 230.00 230KV CKT 1	341.7	0.0398	101.2713	P12:345:UMZB:# 102 #: AVS BD IN ND. AVS BRD LR
17SP	16ALL	2	TO->FROM	G17_109	ELLENDLMVP4 230.00 - J316_SUB 230.00 230KV CKT 1	341.7	0.0398	101.2713	P12:345:UMZB:# 103 #: BD IN SD. LOSS OF LINE
17SP	16ALL	2	TO->FROM	G17_109	ELLENDLMVP4 230.00 - J316_SUB 230.00 230KV CKT 1	341.7	0.03972	106.7334	BUFFALO - JAMESTOWN 345KV CKT 1
17G	16ALL	2	TO->FROM	G17_109	ELLENDLMVP4 230.00 - J316_SUB 230.00 230KV CKT 1	341.7	0.03942	101.3017	CENTER - JAMESTOWN 345KV CKT 1
16WP	16ALL	2	TO->FROM	G17_109	ELLENDLMVP4 230.00 - J316_SUB 230.00 230KV CKT 1	340.8	0.03916	101.5211	BUFFALO - JAMESTOWN 345KV CKT 1
17G	16ALL	2	TO->FROM	G17_109	ELLENDLMVP4 230.00 - J316_SUB 230.00 230KV CKT 1	341.7	0.039	103.6921	BUFFALO - JAMESTOWN 345KV CKT 1
25SP	16ALL	2	TO->FROM	G17_109	ELLENDLMVP4 230.00 - J316_SUB 230.00 230KV CKT 1	342.4	0.03853	101.2395	BISON 3 345.00 - BUFFALO 345KV CKT 1
17SP	16ALL	2	TO->FROM	G17_109	ELLENDLMVP4 230.00 - J316_SUB 230.00 230KV CKT 1	341.7	0.03819	102.8177	BISON 3 345.00 - BUFFALO 345KV CKT 1
25SP	16ALL	2	TO->FROM	G17_109	ELLENDLMVP4 230.00 - J316_SUB 230.00 230KV CKT 1	342.4	0.0372	103.9206	FORBES - ROSEAU 500KV CKT 1
25SP	16ALL	2	TO->FROM	G17_109	ELLENDLMVP4 230.00 - J316_SUB 230.00 230KV CKT 1	342.4	0.0372	104.1542	ROSEAU - ROSEAUM 2 500.00 500KV CKT 1
25SP	16ALL	2	TO->FROM	G17_109	ELLENDLMVP4 230.00 - J316_SUB 230.00 230KV CKT 1	342.4	0.0372	104.1542	ROSEAU - ROSEAUM 2 500.00 500KV CKT 1
25SP	16ALL	2	TO->FROM	G17_109	ELLENDLMVP4 230.00 - J316_SUB 230.00 230KV CKT 1	342.4	0.0372	104.3879	RIEL - ROSEAU 500KV CKT 1
20SP	16ALL	2	TO->FROM	G17_109	ELLENDLMVP4 230.00 - J316_SUB 230.00 230KV CKT 1	341.9	0.03711	102.3059	FORBES - ROSEAU 500KV CKT 1
20SP	16ALL	2	TO->FROM	G17_109	ELLENDLMVP4 230.00 - J316_SUB 230.00 230KV CKT 1	341.9	0.03711	102.5692	ROSEAU - ROSEAUM 2 500.00 500KV CKT 1
20SP	16ALL	2	TO->FROM	G17_109	ELLENDLMVP4 230.00 - J316_SUB 230.00 230KV CKT 1	341.9	0.03711	102.5692	ROSEAU - ROSEAUM 2 500.00 500KV CKT 1
20SP	16ALL	2	TO->FROM	G17_109	ELLENDLMVP4 230.00 - J316_SUB 230.00 230KV CKT 1	341.9	0.03711	102.8324	RIEL - ROSEAU 500KV CKT 1
17SP	16ALL	2	TO->FROM	G17_109	ELLENDLMVP4 230.00 - J316_SUB 230.00 230KV CKT 1	341.7	0.03691	106.3576	FORBES - ROSEAU 500KV CKT 1
17SP	16ALL	2	TO->FROM	G17_109	ELLENDLMVP4 230.00 - J316_SUB 230.00 230KV CKT 1	341.7	0.03691	106.621	ROSEAU - ROSEAUM 2 500.00 500KV CKT 1
17SP	16ALL	2	TO->FROM	G17_109	ELLENDLMVP4 230.00 - J316_SUB 230.00 230KV CKT 1	341.7	0.03691	106.621	ROSEAU - ROSEAUM 2 500.00 500KV CKT 1
17SP	16ALL	2	TO->FROM	G17_109	ELLENDLMVP4 230.00 - J316_SUB 230.00 230KV CKT 1	341.7	0.03691	106.8844	RIEL - ROSEAU 500KV CKT 1
17G	16ALL	2	TO->FROM	G17_109	ELLENDLMVP4 230.00 - J316_SUB 230.00 230KV CKT 1	341.7	0.03622	102.0919	FORBES - ROSEAU 500KV CKT 1
17G	16ALL	2	TO->FROM	G17_109	ELLENDLMVP4 230.00 - J316_SUB 230.00 230KV CKT 1	341.7	0.03622	102.2382	ROSEAU - ROSEAUM 2 500.00 500KV CKT 1
17G	16ALL	2	TO->FROM	G17_109	ELLENDLMVP4 230.00 - J316_SUB 230.00 230KV CKT 1	341.7	0.03622	102.2382	ROSEAU - ROSEAUM 2 500.00 500KV CKT 1
17G	16ALL	2	TO->FROM	G17_109	ELLENDLMVP4 230.00 - J316_SUB 230.00 230KV CKT 1	341.7	0.03622	102.4138	RIEL - ROSEAU 500KV CKT 1
25SP	16ALL	2	TO->FROM	G17_109	ELLENDLMVP4 230.00 - J316_SUB 230.00 230KV CKT 1	318.4	0.03512	101.2475	System Intact
17SP	16ALL	2	TO->FROM	G17_109	ELLENDLMVP4 230.00 - J316_SUB 230.00 230KV CKT 1	317.6	0.03479	103.4194	System Intact

SEASON	GROUP	SCENARIO	DIRECTION	SOURCE	MONITORED ELEMENT	RATE (MVA)	TDF	CONTINGENCY LOADING %	CONTINGENCY
25SP	00NR	2	TO->FROM	G17_109	ELLENDLMVP4 230.00 - J316_SUB 230.00 230KV CKT 1	342.7	0.03425	111.0476	ELLENDLMVP4 230.00 - MERRCRT4 230.00 230KV CKT 1
20SP	00NR	2	TO->FROM	G17_109	ELLENDLMVP4 230.00 - J316_SUB 230.00 230KV CKT 1	342.2	0.03417	110.1211	ELLENDLMVP4 230.00 - MERRCRT4 230.00 230KV CKT 1
17G	16ALL	2	TO->FROM	G17_109	ELLENDLMVP4 230.00 - J316_SUB 230.00 230KV CKT 1	317.6	0.03413	100.8161	System Intact
16WP	00NR	2	TO->FROM	G17_109	ELLENDLMVP4 230.00 - J316_SUB 230.00 230KV CKT 1	340.7	0.03404	117.2271	ELLENDLMVP4 230.00 - MERRCRT4 230.00 230KV CKT 1
17SP	00NR	2	TO->FROM	G17_109	ELLENDLMVP4 230.00 - J316_SUB 230.00 230KV CKT 1	341.7	0.03401	131.7773	ELLENDLMVP4 230.00 - MERRCRT4 230.00 230KV CKT 1
17G	16NR	2	TO->FROM	G17_109	ELLENDLMVP4 230.00 - J316_SUB 230.00 230KV CKT 1	340.6	0.03048	136.0698	ELLENDLMVP4 230.00 - MERRCRT4 230.00 230KV CKT 1
25SP	16ALL	2	TO->FROM	G17_109	ELLENDLMVP4 230.00 - MERRCRT4 230.00 230KV CKT 1	382.5	0.05985	117.4557	ELLENDLMVP4 230.00 - J316_SUB 230.00 230KV CKT 1
20SP	16ALL	2	TO->FROM	G17_109	ELLENDLMVP4 230.00 - MERRCRT4 230.00 230KV CKT 1	382.5	0.05967	114.1689	ELLENDLMVP4 230.00 - J316_SUB 230.00 230KV CKT 1
17SP	16ALL	2	TO->FROM	G17_109	ELLENDLMVP4 230.00 - MERRCRT4 230.00 230KV CKT 1	382.2	0.05964	120.7975	ELLENDLMVP4 230.00 - J316_SUB 230.00 230KV CKT 1
20WP	16ALL	2	TO->FROM	G17_109	ELLENDLMVP4 230.00 - MERRCRT4 230.00 230KV CKT 1	382.9	0.05882	103.9321	ELLENDLMVP4 230.00 - J316_SUB 230.00 230KV CKT 1
16WP	16ALL	2	TO->FROM	G17_109	ELLENDLMVP4 230.00 - MERRCRT4 230.00 230KV CKT 1	382.5	0.0588	113.1399	ELLENDLMVP4 230.00 - J316_SUB 230.00 230KV CKT 1
17G	16ALL	2	TO->FROM	G17_109	ELLENDLMVP4 230.00 - MERRCRT4 230.00 230KV CKT 1	382.5	0.0585	117.028	ELLENDLMVP4 230.00 - J316_SUB 230.00 230KV CKT 1
17SP	00NR	2	TO->FROM	G17_109	ELLENDLMVP4 230.00 - MERRCRT4 230.00 230KV CKT 1	382.5	0.03332	111.4934	ELLENDLMVP4 230.00 - J316_SUB 230.00 230KV CKT 1
17G	16NR	2	TO->FROM	G17_109	ELLENDLMVP4 230.00 - MERRCRT4 230.00 230KV CKT 1	382.4	0.02985	114.8672	ELLENDLMVP4 230.00 - J316_SUB 230.00 230KV CKT 1
25SP	16ALL	2	FROM->TO	G17_109	ELLENDLMVP4 230.00 - OAKES 230KV CKT 1	350.4	0.03932	116.3881	BSSOUTH3 345.00 - J436&437_POI345.00 345KV CKT 1
20SP	16ALL	2	FROM->TO	G17_109	ELLENDLMVP4 230.00 - OAKES 230KV CKT 1	350	0.03916	113.4446	BSSOUTH3 345.00 - J436&437_POI345.00 345KV CKT 1
20WP	16ALL	2	FROM->TO	G17_109	ELLENDLMVP4 230.00 - OAKES 230KV CKT 1	350.8	0.03851	107.6385	BSSOUTH3 345.00 - J436&437_POI345.00 345KV CKT 1
17SP	16ALL	2	FROM->TO	G17_109	FARGO - SHEYNNE 230KV CKT 1	327	0.07786	110.3682	CENTER - JAMESTOWN 345KV CKT 1
17SP	16ALL	2	FROM->TO	G17_109	FARGO - SHEYNNE 230KV CKT 1	327	0.07772	130.5076	BUFFALO - JAMESTOWN 345KV CKT 1
20SP	16ALL	2	FROM->TO	G17_109	FARGO - SHEYNNE 230KV CKT 1	329.7	0.07769	110.8086	CENTER - JAMESTOWN 345KV CKT 1
25SP	16ALL	2	FROM->TO	G17_109	FARGO - SHEYNNE 230KV CKT 1	329.3	0.07765	113.5925	CENTER - JAMESTOWN 345KV CKT 1
20SP	16ALL	2	FROM->TO	G17_109	FARGO - SHEYNNE 230KV CKT 1	329.7	0.07755	133.7555	BUFFALO - JAMESTOWN 345KV CKT 1
25SP	16ALL	2	FROM->TO	G17_109	FARGO - SHEYNNE 230KV CKT 1	329.3	0.07751	136.8406	BUFFALO - JAMESTOWN 345KV CKT 1
20SP	16ALL	2	FROM->TO	G17_109	FARGO - SHEYNNE 230KV CKT 1	329.7	0.06519	101.946	BISON 3 345.00 - BUFFALO 345KV CKT 1
25SP	16ALL	2	FROM->TO	G17_109	FARGO - SHEYNNE 230KV CKT 1	329.3	0.06518	103.3538	BISON 3 345.00 - BUFFALO 345KV CKT 1
17SP	16ALL	2	TO->FROM	G17_109	FT RANDAL - FT THOMPSON 230KV CKT 1	319.6	0.05969	100.2929	GR ISLD-LNX3345.00 - GRAND ISLAND 345KV CKT Z
17SP	16ALL	2	TO->FROM	G17_109	FT RANDAL - FT THOMPSON 230KV CKT 1	319.6	0.05969	100.2929	GR ISLD-LNX3345.00 - HOLT.CO3 345.00 345KV CKT 1
17SP	16ALL	2	TO->FROM	G17_109	FT RANDAL - FT THOMPSON 230KV CKT 1	319.6	0.05894	100.4994	FT RANDAL - LAKE PLATT 230KV CKT 1
17SP	16ALL	2	TO->FROM	G17_109	FT RANDAL - FT THOMPSON 230KV CKT 1	319.6	0.05894	103.0964	P12:230:UMZW:# 739 #: FT IN SD. FT-LP LINE FAULT
17SP	16ALL	2	FROM->TO	G17_109	G14_001IST 115.00 - NEWELL 115KV CKT 1	88.9	0.05885	104.3735	NUNDRWD - NUNDRWD-LNX3230.00 230KV CKT Z
17SP	16ALL	2	FROM->TO	G17_109	G14_001IST 115.00 - NEWELL 115KV CKT 1	88.9	0.05885	104.3735	MAURINE - NUNDRWD-LNX3230.00 230KV CKT 1
20L	16ALL	2	FROM->TO	G17_109	G14_001IST 115.00 - NEWELL 115KV CKT 1	88.4	0.05693	109.8281	MAURINE - NUNDRWD-LNX3230.00 230KV CKT 1
20L	16ALL	2	FROM->TO	G17_109	G14_001IST 115.00 - NEWELL 115KV CKT 1	88.4	0.05693	109.8281	NUNDRWD - NUNDRWD-LNX3230.00 230KV CKT Z
17G	16ALL	2	TO->FROM	G17_109	GARRISON - STANTONTAP 7115.00 115KV CKT 1	121	0.0371	102.1818	CENTER - COYOTE 345KV CKT 1
16WP	16ALL	2	TO->FROM	G17_109	GARRISON - STANTONTAP 7115.00 115KV CKT 1	131.9	0.03666	106.4958	CENTER - COYOTE 345KV CKT 1
20WP	16ALL	2	TO->FROM	G17_109	GARRISON - STANTONTAP 7115.00 115KV CKT 1	132	0.03503	106.6121	CENTER - COYOTE 345KV CKT 1
17G	16ALL	2	TO->FROM	G17_109	GERALD GENTLEMAN STATION - OGALLALA 230KV CKT 1	319.6	0.04235	116.005	GERALD GENTLEMAN STATION - KEYSTONE 345KV CKT 1
20L	16ALL	2	TO->FROM	G17_109	GLENHAM - L3 HAWDON 230KV CKT 1	209.7	0.07019	103.5193	BISON - MAURINE 230KV CKT 1
20L	16ALL	2	TO->FROM	G17_109	GLENHAM - L3 HAWDON 230KV CKT 1	209.7	0.07019	105.1407	BISON - HETINGER 230KV CKT 1
25SP	16ALL	2	TO->FROM	G17_109	GLENHAM - L3 HAWDON 230KV CKT 1	210	0.06506	100.2914	G16-017-TAP 345.00 - LELAND2-LNX3345.00 345KV CKT 1
25SP	16ALL	2	TO->FROM	G17_109	GLENHAM - L3 HAWDON 230KV CKT 1	210	0.06506	101.1009	LELAND OLDS - LELAND2-LNX3345.00 345KV CKT Z
25SP	16ALL	2	TO->FROM	G17_109	GLENHAM - L3 HAWDON 230KV CKT 1	210	0.06506	101.9581	P12:345:UMZB:# 108 #: LOS FT IN ND. LOS FT
25SP	16ALL	2	TO->FROM	G17_109	GLENHAM - L3 HAWDON 230KV CKT 1	210	0.06506	103.1962	FT THOMPSON - FTTHOM1-LNX3345.00 345KV CKT Z
25SP	16ALL	2	TO->FROM	G17_109	GLENHAM - L3 HAWDON 230KV CKT 1	210	0.06506	103.1962	FTTHOM1-LNX3345.00 - G16-017-TAP 345.00 345KV CKT 1
20L	16ALL	2	TO->FROM	G17_109	GLENHAM - L3 HAWDON 230KV CKT 1	209.7	0.06183	109.1102	G16-017-TAP 345.00 - LELAND2-LNX3345.00 345KV CKT 1
20L	16ALL	2	TO->FROM	G17_109	GLENHAM - L3 HAWDON 230KV CKT 1	209.7	0.06183	109.7778	LELAND OLDS - LELAND2-LNX3345.00 345KV CKT Z
20L	16ALL	2	TO->FROM	G17_109	GLENHAM - L3 HAWDON 230KV CKT 1	209.7	0.06183	110.7315	P12:345:UMZB:# 108 #: LOS FT IN ND. LOS FT
20L	16ALL	2	TO->FROM	G17_109	GLENHAM - L3 HAWDON 230KV CKT 1	209.7	0.06183	112.0668	FT THOMPSON - FTTHOM1-LNX3345.00 345KV CKT Z
20L	16ALL	2	TO->FROM	G17_109	GLENHAM - L3 HAWDON 230KV CKT 1	209.7	0.06183	112.0668	FTTHOM1-LNX3345.00 - G16-017-TAP 345.00 345KV CKT 1
20L	16ALL	2	TO->FROM	G17_109	GLENHAM - L3 HAWDON 230KV CKT 1	209.7	0.05658	101.4135	ANTELOP-LNX3345.00 - BRDLAND-LNX3345.00 345KV CKT 1
20L	16ALL	2	TO->FROM	G17_109	GLENHAM - L3 HAWDON 230KV CKT 1	209.7	0.05658	101.4135	BRDLAND-LNX3345.00 - HURON 345KV CKT Z
20L	16ALL	2	TO->FROM	G17_109	GLENHAM - L3 HAWDON 230KV CKT 1	209.7	0.05658	101.4135	HURON (BD 90343-A) 345/230/13.8KV TRANSFORMER CKT 1
20L	16ALL	2	TO->FROM	G17_109	GLENHAM - L3 HAWDON 230KV CKT 1	209.7	0.05658	101.4135	P13:345:UMZB:# 244 #: BD IN SD. LOSS OF TX
20L	16ALL	2	TO->FROM	G17_109	GLENHAM - L3 HAWDON 230KV CKT 1	209.7	0.05658	101.4135	BROADLAND - HURON 230KV CKT 1
20L	16ALL	2	TO->FROM	G17_109	GLENHAM - L3 HAWDON 230KV CKT 1	209.7	0.05658	101.6042	P12:345:UMZB:# 103 #: BD IN SD. LOSS OF LINE

SEASON	GROUP	SCENARIO	DIRECTION	SOURCE	MONITORED ELEMENT	RATE (MVA)	TDF	CONTINGENCY LOADING %	CONTINGENCY
20L	16ALL	2	TO->FROM	G17_109	GLENHAM - L3 HAWDON 230KV CKT 1	209.7	0.05658	101.6519	P12:345:UMZB:# 102 #: AVS BD IN ND. AVS BRD LR
20L	16ALL	2	TO->FROM	G17_109	GLENHAM - L3 HAWDON 230KV CKT 1	209.7	0.05658	101.6996	ANTELOP-LNX3345.00 - ANTELOPE VALLEY 345KV CKT Z
20L	16ALL	2	TO->FROM	G17_109	GLENHAM - L3 HAWDON 230KV CKT 1	209.7	0.04957	103.3286	FORBES - ROSEAU 500KV CKT 1
20L	16ALL	2	TO->FROM	G17_109	GLENHAM - L3 HAWDON 230KV CKT 1	209.7	0.04957	103.6147	ROSEAU - ROSEAUM 2 500.00 500KV CKT 1
20L	16ALL	2	TO->FROM	G17_109	GLENHAM - L3 HAWDON 230KV CKT 1	209.7	0.04957	103.6147	ROSEAU - ROSEAUM 2 500.00 500KV CKT 1
20L	16ALL	2	TO->FROM	G17_109	GLENHAM - L3 HAWDON 230KV CKT 1	209.7	0.04957	103.9008	RIEL - ROSEAU 500KV CKT 1
25SP	16ALL	2	FROM->TO	G17_109	GRANITE FALLS - MN VALLEY TAP 230KV CKT 1	257.6	0.0509	103.6475	GRANITE FALLS - MN VALLEY TAP 230KV CKT 1
20SP	16ALL	2	FROM->TO	G17_109	GRANITE FALLS - MN VALLEY TAP 230KV CKT 1	258.8	0.05056	102.8841	GRANITE FALLS - MN VALLEY TAP 230KV CKT 1
20L	16ALL	2	FROM->TO	G17_109	GRANITE FALLS - MN VALLEY TAP 230KV CKT 1	257.8	0.04645	103.2661	GRANITE FALLS - MN VALLEY TAP 230KV CKT 1
25SP	16ALL	2	FROM->TO	G17_109	HESKETT - WISHEK 230KV CKT 1	256.4	0.07411	101.3463	BUFFALO - JAMESTOWN 345KV CKT 1
17SP	16ALL	2	FROM->TO	G17_109	HESKETT - WISHEK 230KV CKT 1	256.6	0.07386	105.0491	BUFFALO - JAMESTOWN 345KV CKT 1
17SP	16ALL	2	FROM->TO	G17_109	HESKETT - WISHEK 230KV CKT 1	256.6	0.06863	104.1356	FORBES - ROSEAU 500KV CKT 1
17SP	16ALL	2	FROM->TO	G17_109	HESKETT - WISHEK 230KV CKT 1	256.6	0.06863	104.7592	ROSEAU - ROSEAUM 2 500.00 500KV CKT 1
17SP	16ALL	2	FROM->TO	G17_109	HESKETT - WISHEK 230KV CKT 1	256.6	0.06863	104.7592	ROSEAU - ROSEAUM 2 500.00 500KV CKT 1
17SP	16ALL	2	FROM->TO	G17_109	HESKETT - WISHEK 230KV CKT 1	256.6	0.06863	105.4217	RIEL - ROSEAU 500KV CKT 1
25SP	16ALL	2	FROM->TO	G17_109	HESKETT (HESKETT TR1) 230/115/13.8KV TRANSFORMER CKT 1	124.3	0.04695	114.5551	HESKETT - MANDAN 4 230.00 230KV CKT 1
25SP	16ALL	2	FROM->TO	G17_109	HESKETT (HESKETT TR1) 230/115/13.8KV TRANSFORMER CKT 1	124.2	0.04695	114.6473	HESKETT - MANDAN 4 230.00 230KV CKT 1
20SP	16ALL	2	FROM->TO	G17_109	HESKETT (HESKETT TR1) 230/115/13.8KV TRANSFORMER CKT 1	124.4	0.04681	104.4469	HESKETT - MANDAN 4 230.00 230KV CKT 1
20SP	16ALL	2	FROM->TO	G17_109	HESKETT (HESKETT TR1) 230/115/13.8KV TRANSFORMER CKT 1	124.3	0.04681	104.531	HESKETT - MANDAN 4 230.00 230KV CKT 1
17SP	16ALL	2	FROM->TO	G17_109	HESKETT (HESKETT TR1) 230/115/13.8KV TRANSFORMER CKT 1	124.7	0.04676	118.2197	HESKETT - MANDAN 4 230.00 230KV CKT 1
17SP	16ALL	2	FROM->TO	G17_109	HESKETT (HESKETT TR1) 230/115/13.8KV TRANSFORMER CKT 1	124.6	0.04676	118.3146	HESKETT - MANDAN 4 230.00 230KV CKT 1
16WP	16ALL	2	FROM->TO	G17_109	HESKETT (HESKETT TR1) 230/115/13.8KV TRANSFORMER CKT 1	124.8	0.04607	102.1218	HESKETT - MANDAN 4 230.00 230KV CKT 1
16WP	16ALL	2	FROM->TO	G17_109	HESKETT (HESKETT TR1) 230/115/13.8KV TRANSFORMER CKT 1	124.8	0.04607	102.1218	HESKETT - MANDAN 4 230.00 230KV CKT 1
17G	16ALL	2	FROM->TO	G17_109	HESKETT (HESKETT TR1) 230/115/13.8KV TRANSFORMER CKT 1	124.7	0.04582	105.4082	HESKETT - MANDAN 4 230.00 230KV CKT 1
17G	16ALL	2	FROM->TO	G17_109	HESKETT (HESKETT TR1) 230/115/13.8KV TRANSFORMER CKT 1	124.7	0.04582	105.4082	HESKETT - MANDAN 4 230.00 230KV CKT 1
25SP	16ALL	2	TO->FROM	G17_109	KARLSTAD - WINGER 230KV CKT 1	286.4	0.0413	100.669	ROSEAU - ROSEAUM 2 500.00 500KV CKT 1
25SP	16ALL	2	TO->FROM	G17_109	KARLSTAD - WINGER 230KV CKT 1	286.4	0.0413	100.669	ROSEAU - ROSEAUM 2 500.00 500KV CKT 1
25SP	16ALL	2	TO->FROM	G17_109	KARLSTAD - WINGER 230KV CKT 1	286.4	0.0413	101.9609	RIEL - ROSEAU 500KV CKT 1
17SP	16ALL	2	TO->FROM	G17_109	KARLSTAD - WINGER 230KV CKT 1	286.4	0.04095	101.7444	FORBES - ROSEAU 500KV CKT 1
17SP	16ALL	2	TO->FROM	G17_109	KARLSTAD - WINGER 230KV CKT 1	286.4	0.04095	103.1061	ROSEAU - ROSEAUM 2 500.00 500KV CKT 1
17SP	16ALL	2	TO->FROM	G17_109	KARLSTAD - WINGER 230KV CKT 1	286.4	0.04095	103.1061	ROSEAU - ROSEAUM 2 500.00 500KV CKT 1
17SP	16ALL	2	TO->FROM	G17_109	KARLSTAD - WINGER 230KV CKT 1	286.4	0.04095	104.4679	RIEL - ROSEAU 500KV CKT 1
20SP	16ALL	2	TO->FROM	G17_109	KARLSTAD - WINGER 230KV CKT 1	286	0.04023	105.407	FORBES - ROSEAU 500KV CKT 1
20SP	16ALL	2	TO->FROM	G17_109	KARLSTAD - WINGER 230KV CKT 1	286	0.04023	106.7706	ROSEAU - ROSEAUM 2 500.00 500KV CKT 1
20SP	16ALL	2	TO->FROM	G17_109	KARLSTAD - WINGER 230KV CKT 1	286	0.04023	106.7706	ROSEAU - ROSEAUM 2 500.00 500KV CKT 1
20SP	16ALL	2	TO->FROM	G17_109	KARLSTAD - WINGER 230KV CKT 1	286	0.04023	108.1343	RIEL - ROSEAU 500KV CKT 1
20SP	16ALL	2	FROM->TO	G17_109	LEWIS & CLARK - RICHLAND 115KV CKT 1	100.9	0.2671	106.2755	BELFIELD - MEDORA 230KV CKT 1
20SP	16ALL	2	FROM->TO	G17_109	LEWIS & CLARK - RICHLAND 115KV CKT 1	100.9	0.2671	110.1407	BEAVERHILL4 230.00 - MEDORA 230KV CKT 1
25SP	16ALL	2	FROM->TO	G17_109	LEWIS & CLARK - RICHLAND 115KV CKT 1	100.7	0.26707	100.1231	BEAVERHILL4 230.00 - MEDORA 230KV CKT 1
17SP	16ALL	2	FROM->TO	G17_109	LEWIS & CLARK - RICHLAND 115KV CKT 1	101	0.26676	112.0951	BEAVERHILL4 230.00 - DAWSON CREEK 230KV CKT 1
17SP	16ALL	2	FROM->TO	G17_109	LEWIS & CLARK - RICHLAND 115KV CKT 1	101	0.26676	130.8079	BELFIELD - MEDORA 230KV CKT 1
17SP	16ALL	2	FROM->TO	G17_109	LEWIS & CLARK - RICHLAND 115KV CKT 1	101	0.26676	134.5703	BEAVERHILL4 230.00 - MEDORA 230KV CKT 1
16WP	16ALL	2	FROM->TO	G17_109	LEWIS & CLARK - RICHLAND 115KV CKT 1	124	0.2665	110.8161	BELFIELD - MEDORA 230KV CKT 1
16WP	16ALL	2	FROM->TO	G17_109	LEWIS & CLARK - RICHLAND 115KV CKT 1	124	0.2665	114.4452	BEAVERHILL4 230.00 - MEDORA 230KV CKT 1
17G	16ALL	2	FROM->TO	G17_109	LEWIS & CLARK - RICHLAND 115KV CKT 1	100.9	0.26629	107.2587	BELFIELD - MEDORA 230KV CKT 1
17G	16ALL	2	FROM->TO	G17_109	LEWIS & CLARK - RICHLAND 115KV CKT 1	100.9	0.26629	110.9257	BEAVERHILL4 230.00 - MEDORA 230KV CKT 1
17SP	00NR	2	FROM->TO	G17_109	LEWIS & CLARK - RICHLAND 115KV CKT 1	101	0.26565	102.9782	BELFIELD - MEDORA 230KV CKT 1
17SP	00NR	2	FROM->TO	G17_109	LEWIS & CLARK - RICHLAND 115KV CKT 1	101	0.26565	104.9584	BEAVERHILL4 230.00 - DAWSON CREEK 230KV CKT 1
17SP	00NR	2	FROM->TO	G17_109	LEWIS & CLARK - RICHLAND 115KV CKT 1	101	0.26565	106.6416	BEAVERHILL4 230.00 - MEDORA 230KV CKT 1
17SP	16ALL	2	FROM->TO	G17_109	LEWIS & CLARK - RICHLAND 115KV CKT 1	101	0.19453	103.6277	BELFIELD - CHARLIE CREEK 345KV CKT 1
17SP	00NR	2	FROM->TO	G17_109	LEWIS & CLARK - RICHLAND 115KV CKT 1	101	0.17168	101.0273	CULBERTSN E7115.00 - WILISTON 115KV CKT 1
17SP	16ALL	2	FROM->TO	G17_109	LEWIS & CLARK - RICHLAND 115KV CKT 1	101	0.17124	101.3624	CULBERTSON - POPLAR 115KV CKT 1
17SP	16ALL	2	FROM->TO	G17_109	LEWIS & CLARK - RICHLAND 115KV CKT 1	101	0.17124	104.6297	POPLAR - WOLF POINT 115KV CKT 1
17SP	16ALL	2	FROM->TO	G17_109	LEWIS & CLARK - RICHLAND 115KV CKT 1	101	0.1712	119.5644	CULBERTSN E7115.00 - WILISTON 115KV CKT 1
16WP	16ALL	2	FROM->TO	G17_109	LEWIS & CLARK - RICHLAND 115KV CKT 1	124	0.17098	104.2484	CULBERTSN E7115.00 - WILISTON 115KV CKT 1

SEASON	GROUP	SCENARIO	DIRECTION	SOURCE	MONITORED ELEMENT	RATE (MVA)	TDF	CONTINGENCY LOADING %	CONTINGENCY
17G	16ALL	2	FROM->TO	G17_109	LEWIS & CLARK - RICHLAND 115KV CKT 1	100.9	0.1707	100.8484	CULBERTSN E7115.00 - WILISTON 115KV CKT 1
17SP	16ALL	2	FROM->TO	G17_109	LEWIS & CLARK - RICHLAND 115KV CKT 1	101	0.15267	102.9109	BISON - MAURINE 230KV CKT 1
17SP	16ALL	2	FROM->TO	G17_109	LEWIS & CLARK - RICHLAND 115KV CKT 1	101	0.15267	103.802	BISON - HETINGER 230KV CKT 1
17SP	16ALL	2	FROM->TO	G17_109	LEWIS & CLARK - RICHLAND 115KV CKT 1	101	0.15021	102.5347	BELFIELD - DAGLUM 4230.00 230KV CKT 1
17SP	16ALL	2	FROM->TO	G17_109	LEWIS & CLARK - RICHLAND 115KV CKT 1	101	0.13665	105.6594	CHARLIE CREEK (CCR KV2A) 345/115/13.8KV TRANSFORMER CKT 1
25SP	16ALL	2	FROM->TO	G17_109	MAPLE RIVER TAP NORTH - SHEYNNE 115KV CKT 1	158	0.03045	141.3063	BISON 3 345.00 - BUFFALO 345KV CKT 1
17SP	16ALL	2	FROM->TO	G17_109	MAPLE RIVER TAP NORTH - SHEYNNE 115KV CKT 1	159.9	0.03039	130.6692	BISON 3 345.00 - BUFFALO 345KV CKT 1
20SP	16ALL	2	FROM->TO	G17_109	MAPLE RIVER TAP NORTH - SHEYNNE 115KV CKT 1	158.2	0.03039	133.9671	BISON 3 345.00 - BUFFALO 345KV CKT 1
17G	16ALL	2	FROM->TO	G17_109	MAPLE RIVER TAP NORTH - SHEYNNE 115KV CKT 1	160.3	0.03005	121.5221	BISON 3 345.00 - BUFFALO 345KV CKT 1
16WP	16ALL	2	FROM->TO	G17_109	MAPLE RIVER TAP NORTH - SHEYNNE 115KV CKT 1	155.7	0.02992	126.5613	BISON 3 345.00 - BUFFALO 345KV CKT 1
20WP	16ALL	2	FROM->TO	G17_109	MAPLE RIVER TAP NORTH - SHEYNNE 115KV CKT 1	155.6	0.02983	126.1697	BISON 3 345.00 - BUFFALO 345KV CKT 1
25SP	16ALL	2	FROM->TO	G17_109	MAURINE (MA KV1A) 230/115/13.8KV TRANSFORMER CKT 1	123	0.09674	103.9057	NUNDRWD - NUNDRWD-LNX3230.00 230KV CKT Z
25SP	16ALL	2	FROM->TO	G17_109	MAURINE (MA KV1A) 230/115/13.8KV TRANSFORMER CKT 1	123	0.09674	103.9057	MAURINE - NUNDRWD-LNX3230.00 230KV CKT 1
25SP	16ALL	2	FROM->TO	G17_109	MAURINE (MA KV1A) 230/115/13.8KV TRANSFORMER CKT 1	122.5	0.09674	104.2482	NUNDRWD - NUNDRWD-LNX3230.00 230KV CKT Z
25SP	16ALL	2	FROM->TO	G17_109	MAURINE (MA KV1A) 230/115/13.8KV TRANSFORMER CKT 1	122.5	0.09674	104.2482	MAURINE - NUNDRWD-LNX3230.00 230KV CKT 1
17SP	16ALL	2	FROM->TO	G17_109	MAURINE (MA KV1A) 230/115/13.8KV TRANSFORMER CKT 1	123.7	0.09667	107.0137	NUNDRWD - NUNDRWD-LNX3230.00 230KV CKT Z
17SP	16ALL	2	FROM->TO	G17_109	MAURINE (MA KV1A) 230/115/13.8KV TRANSFORMER CKT 1	123.7	0.09667	107.0137	MAURINE - NUNDRWD-LNX3230.00 230KV CKT 1
17SP	16ALL	2	FROM->TO	G17_109	MAURINE (MA KV1A) 230/115/13.8KV TRANSFORMER CKT 1	123.5	0.09667	107.1061	NUNDRWD - NUNDRWD-LNX3230.00 230KV CKT Z
17SP	16ALL	2	FROM->TO	G17_109	MAURINE (MA KV1A) 230/115/13.8KV TRANSFORMER CKT 1	123.5	0.09667	107.1061	MAURINE - NUNDRWD-LNX3230.00 230KV CKT 1
20SP	16ALL	2	FROM->TO	G17_109	MAURINE (MA KV1A) 230/115/13.8KV TRANSFORMER CKT 1	122.8	0.09601	100.1368	MAURINE - NUNDRWD-LNX3230.00 230KV CKT 1
20SP	16ALL	2	FROM->TO	G17_109	MAURINE (MA KV1A) 230/115/13.8KV TRANSFORMER CKT 1	122.8	0.09601	100.1368	NUNDRWD - NUNDRWD-LNX3230.00 230KV CKT Z
20L	16ALL	2	FROM->TO	G17_109	MAURINE (MA KV1A) 230/115/13.8KV TRANSFORMER CKT 1	124.9	0.09495	112.9287	MAURINE - NUNDRWD-LNX3230.00 230KV CKT 1
20L	16ALL	2	FROM->TO	G17_109	MAURINE (MA KV1A) 230/115/13.8KV TRANSFORMER CKT 1	124.9	0.09495	112.9287	NUNDRWD - NUNDRWD-LNX3230.00 230KV CKT Z
20L	16ALL	2	FROM->TO	G17_109	MAURINE (MA KV1A) 230/115/13.8KV TRANSFORMER CKT 1	124.8	0.09495	113.0192	MAURINE - NUNDRWD-LNX3230.00 230KV CKT 1
20L	16ALL	2	FROM->TO	G17_109	MAURINE (MA KV1A) 230/115/13.8KV TRANSFORMER CKT 1	124.8	0.09495	113.0192	NUNDRWD - NUNDRWD-LNX3230.00 230KV CKT Z
17SP	16ALL	2	TO->FROM	G17_109	MERRCRT4 230.00 - WISHEK 230KV CKT 1	254.4	0.07386	100.4544	BUFFALO - JAMESTOWN 345KV CKT 1
17SP	16ALL	2	TO->FROM	G17_109	MERRCRT4 230.00 - WISHEK 230KV CKT 1	254.4	0.06863	100.2013	ROSEAU - ROSEAUM 2 500.00 500KV CKT 1
17SP	16ALL	2	TO->FROM	G17_109	MERRCRT4 230.00 - WISHEK 230KV CKT 1	254.4	0.06863	100.2013	ROSEAU - ROSEAUM 2 500.00 500KV CKT 1
17SP	16ALL	2	TO->FROM	G17_109	MERRCRT4 230.00 - WISHEK 230KV CKT 1	254.4	0.06863	100.8302	RIEL - ROSEAU 500KV CKT 1
17SP	16ALL	2	TO->FROM	G17_109	OGALLALA - SIDNEY 230KV CKT 1	319.6	0.04567	131.3204	SIDNEY - SIDNEY1-LNX3345.00 345KV CKT Z
17SP	16ALL	2	TO->FROM	G17_109	OGALLALA - SIDNEY 230KV CKT 1	319.6	0.04567	131.3204	KEYSTONE - SIDNEY1-LNX3345.00 345KV CKT 1
25SP	16ALL	2	TO->FROM	G17_109	OGALLALA - SIDNEY 230KV CKT 1	319.9	0.04354	127.6574	KEYSTONE - SIDNEY1-LNX3345.00 345KV CKT 1
25SP	16ALL	2	TO->FROM	G17_109	OGALLALA - SIDNEY 230KV CKT 1	319.9	0.04354	127.6574	SIDNEY - SIDNEY1-LNX3345.00 345KV CKT Z
20SP	16ALL	2	TO->FROM	G17_109	OGALLALA - SIDNEY 230KV CKT 1	319.9	0.04323	126.7996	KEYSTONE - SIDNEY1-LNX3345.00 345KV CKT 1
20SP	16ALL	2	TO->FROM	G17_109	OGALLALA - SIDNEY 230KV CKT 1	319.9	0.04323	126.7996	SIDNEY - SIDNEY1-LNX3345.00 345KV CKT Z
16WP	16ALL	2	TO->FROM	G17_109	OGALLALA - SIDNEY 230KV CKT 1	319.5	0.04193	123.1161	KEYSTONE - SIDNEY1-LNX3345.00 345KV CKT 1
16WP	16ALL	2	TO->FROM	G17_109	OGALLALA - SIDNEY 230KV CKT 1	319.5	0.04193	123.1161	SIDNEY - SIDNEY1-LNX3345.00 345KV CKT Z
17G	16ALL	2	TO->FROM	G17_109	OGALLALA - SIDNEY 230KV CKT 1	319.5	0.04063	135.9474	SIDNEY - SIDNEY1-LNX3345.00 345KV CKT Z
17G	16ALL	2	TO->FROM	G17_109	OGALLALA - SIDNEY 230KV CKT 1	319.5	0.04063	135.9474	KEYSTONE - SIDNEY1-LNX3345.00 345KV CKT 1
20WP	16ALL	2	TO->FROM	G17_109	OGALLALA - SIDNEY 230KV CKT 1	319.7	0.04063	115.3556	SIDNEY - SIDNEY1-LNX3345.00 345KV CKT Z
20WP	16ALL	2	TO->FROM	G17_109	OGALLALA - SIDNEY 230KV CKT 1	319.7	0.04063	115.3556	KEYSTONE - SIDNEY1-LNX3345.00 345KV CKT 1
17SP	16ALL	2	FROM->TO	G17_109	PRAIRIE - WINGER 230KV CKT 1	399.8	0.04633	107.4047	FORBES - ROSEAU 500KV CKT 1
17SP	16ALL	2	FROM->TO	G17_109	PRAIRIE - WINGER 230KV CKT 1	399.8	0.04633	108.8554	ROSEAU - ROSEAUM 2 500.00 500KV CKT 1
17SP	16ALL	2	FROM->TO	G17_109	PRAIRIE - WINGER 230KV CKT 1	399.8	0.04633	108.8554	ROSEAU - ROSEAUM 2 500.00 500KV CKT 1
17SP	16ALL	2	FROM->TO	G17_109	PRAIRIE - WINGER 230KV CKT 1	399.8	0.04633	110.3062	RIEL - ROSEAU 500KV CKT 1
20SP	16ALL	2	FROM->TO	G17_109	PRAIRIE - WINGER 230KV CKT 1	399.9	0.04609	107.7319	FORBES - ROSEAU 500KV CKT 1
20SP	16ALL	2	FROM->TO	G17_109	PRAIRIE - WINGER 230KV CKT 1	399.9	0.04609	109.2073	ROSEAU - ROSEAUM 2 500.00 500KV CKT 1
20SP	16ALL	2	FROM->TO	G17_109	PRAIRIE - WINGER 230KV CKT 1	399.9	0.04609	109.2073	ROSEAU - ROSEAUM 2 500.00 500KV CKT 1
20SP	16ALL	2	FROM->TO	G17_109	PRAIRIE - WINGER 230KV CKT 1	399.9	0.04609	110.6577	RIEL - ROSEAU 500KV CKT 1
25SP	16ALL	2	FROM->TO	G17_109	PRAIRIE - WINGER 230KV CKT 1	399.9	0.04416	103.3088	FORBES - ROSEAU 500KV CKT 1
25SP	16ALL	2	FROM->TO	G17_109	PRAIRIE - WINGER 230KV CKT 1	399.9	0.04416	104.5341	ROSEAU - ROSEAUM 2 500.00 500KV CKT 1
25SP	16ALL	2	FROM->TO	G17_109	PRAIRIE - WINGER 230KV CKT 1	399.9	0.04416	104.5341	ROSEAU - ROSEAUM 2 500.00 500KV CKT 1
25SP	16ALL	2	FROM->TO	G17_109	PRAIRIE - WINGER 230KV CKT 1	399.9	0.04416	105.7594	RIEL - ROSEAU 500KV CKT 1
25SP	16ALL	3	TO->FROM	G17_109	AUDUBON - SHEYNNE 230KV CKT 1	278.7	0.03438	100.5554	ROSEAU - ROSEAUM 2 500.00 500KV CKT 1
25SP	16ALL	3	TO->FROM	G17_109	AUDUBON - SHEYNNE 230KV CKT 1	278.7	0.03438	100.5554	ROSEAU - ROSEAUM 2 500.00 500KV CKT 1

SEASON	GROUP	SCENARIO	DIRECTION	SOURCE	MONITORED ELEMENT	RATE (MVA)	TDF	CONTINGENCY LOADING %	CONTINGENCY
25SP	16ALL	3	TO->FROM	G17_109	AUDUBON - SHEYNNE 230KV CKT 1	278.7	0.03438	101.1295	RIEL - ROSEAU 500KV CKT 1
20SP	16ALL	3	TO->FROM	G17_109	AUDUBON - SHEYNNE 230KV CKT 1	278.6	0.03412	100.1981	RIEL - ROSEAU 500KV CKT 1
20L	16NR	3	TO->FROM	G17_109	BEULAH - COYOTE 115KV CKT 1	102	0.04289	182.3773	CENTER - COYOTE 345KV CKT 1
17G	16NR	3	TO->FROM	G17_109	BEULAH - COYOTE 115KV CKT 1	101.9	0.04187	311.4803	CENTER - COYOTE 345KV CKT 1
20L	16ALL	3	TO->FROM	G17_109	BEULAH - COYOTE 115KV CKT 1	102	0.04142	181.8	CENTER - COYOTE 345KV CKT 1
20L	13ALL	3	TO->FROM	G17_109	BEULAH - COYOTE 115KV CKT 1	101.9	0.04124	148.9443	CENTER - COYOTE 345KV CKT 1
16WP	00NR	3	TO->FROM	G17_109	BEULAH - COYOTE 115KV CKT 1	122.9	0.04086	268.7349	CENTER - COYOTE 345KV CKT 1
17SP	00NR	3	TO->FROM	G17_109	BEULAH - COYOTE 115KV CKT 1	101.9	0.04084	275.3374	CENTER - COYOTE 345KV CKT 1
20SP	00NR	3	TO->FROM	G17_109	BEULAH - COYOTE 115KV CKT 1	101.9	0.0408	228.4161	CENTER - COYOTE 345KV CKT 1
25SP	00NR	3	TO->FROM	G17_109	BEULAH - COYOTE 115KV CKT 1	101.9	0.04078	243.4245	CENTER - COYOTE 345KV CKT 1
17G	16ALL	3	TO->FROM	G17_109	BEULAH - COYOTE 115KV CKT 1	102	0.04058	310.5059	CENTER - COYOTE 345KV CKT 1
20WP	00NR	3	TO->FROM	G17_109	BEULAH - COYOTE 115KV CKT 1	122.9	0.04053	258.0713	CENTER - COYOTE 345KV CKT 1
17G	13ALL	3	TO->FROM	G17_109	BEULAH - COYOTE 115KV CKT 1	102	0.04053	275.1212	CENTER - COYOTE 345KV CKT 1
20WP	16ALL	3	TO->FROM	G17_109	BEULAH - COYOTE 115KV CKT 1	122.8	0.0405	267.8893	CENTER - COYOTE 345KV CKT 1
20WP	13ALL	3	TO->FROM	G17_109	BEULAH - COYOTE 115KV CKT 1	122.7	0.04048	241.7454	CENTER - COYOTE 345KV CKT 1
20SP	16ALL	3	TO->FROM	G17_109	BEULAH - COYOTE 115KV CKT 1	102	0.04047	238.3843	CENTER - COYOTE 345KV CKT 1
20SP	13ALL	3	TO->FROM	G17_109	BEULAH - COYOTE 115KV CKT 1	102	0.04045	205.5958	CENTER - COYOTE 345KV CKT 1
25SP	16ALL	3	TO->FROM	G17_109	BEULAH - COYOTE 115KV CKT 1	102	0.04042	254.451	CENTER - COYOTE 345KV CKT 1
25SP	13ALL	3	TO->FROM	G17_109	BEULAH - COYOTE 115KV CKT 1	102	0.04041	221.9638	CENTER - COYOTE 345KV CKT 1
16WP	16ALL	3	TO->FROM	G17_109	BEULAH - COYOTE 115KV CKT 1	122.9	0.0404	275.6257	CENTER - COYOTE 345KV CKT 1
16WP	13ALL	3	TO->FROM	G17_109	BEULAH - COYOTE 115KV CKT 1	122.9	0.04036	247.725	CENTER - COYOTE 345KV CKT 1
17SP	16ALL	3	TO->FROM	G17_109	BEULAH - COYOTE 115KV CKT 1	101.9	0.04031	281.9548	CENTER - COYOTE 345KV CKT 1
17SP	13ALL	3	TO->FROM	G17_109	BEULAH - COYOTE 115KV CKT 1	102	0.04029	248.6441	CENTER - COYOTE 345KV CKT 1
17G	16ALL	3	FROM->TO	G17_109	BEULAH - STANTONTAP 7115.00 115KV CKT 1	121	0.03712	102.2678	CENTER - COYOTE 345KV CKT 1
16WP	16ALL	3	FROM->TO	G17_109	BEULAH - STANTONTAP 7115.00 115KV CKT 1	131.9	0.03668	106.4989	CENTER - COYOTE 345KV CKT 1
20WP	16ALL	3	FROM->TO	G17_109	BEULAH - STANTONTAP 7115.00 115KV CKT 1	132	0.03505	106.6152	CENTER - COYOTE 345KV CKT 1
25SP	16ALL	3	TO->FROM	G17_109	BUFFALO - JAMESTOWN 345KV CKT 1	704.9	0.10687	118.5785	CENTER - CNTSHNT3 345.00 345KV CKT Z1
25SP	16ALL	3	TO->FROM	G17_109	BUFFALO - JAMESTOWN 345KV CKT 1	704.9	0.10687	118.5785	CNTSHNT3 345.00 - PRAIRIE3 345.00 345KV CKT 1
17SP	16ALL	3	TO->FROM	G17_109	BUFFALO - JAMESTOWN 345KV CKT 1	704.4	0.10651	110.8063	CNTSHNT3 345.00 - PRAIRIE3 345.00 345KV CKT 1
17SP	16ALL	3	TO->FROM	G17_109	BUFFALO - JAMESTOWN 345KV CKT 1	704.4	0.10651	110.8063	CENTER - CNTSHNT3 345.00 345KV CKT Z1
20SP	16ALL	3	TO->FROM	G17_109	BUFFALO - JAMESTOWN 345KV CKT 1	704.8	0.1065	112.2594	CNTSHNT3 345.00 - PRAIRIE3 345.00 345KV CKT 1
20SP	16ALL	3	TO->FROM	G17_109	BUFFALO - JAMESTOWN 345KV CKT 1	704.8	0.1065	112.2594	CENTER - CNTSHNT3 345.00 345KV CKT Z1
17G	16ALL	3	TO->FROM	G17_109	BUFFALO - JAMESTOWN 345KV CKT 1	704.9	0.10534	105.0566	CNTSHNT3 345.00 - PRAIRIE3 345.00 345KV CKT 1
17G	16ALL	3	TO->FROM	G17_109	BUFFALO - JAMESTOWN 345KV CKT 1	704.9	0.10534	105.0566	CENTER - CNTSHNT3 345.00 345KV CKT Z1
16WP	16ALL	3	TO->FROM	G17_109	BUFFALO - JAMESTOWN 345KV CKT 1	716.7	0.10483	106.2179	CNTSHNT3 345.00 - PRAIRIE3 345.00 345KV CKT 1
16WP	16ALL	3	TO->FROM	G17_109	BUFFALO - JAMESTOWN 345KV CKT 1	716.7	0.10483	106.2179	CENTER - CNTSHNT3 345.00 345KV CKT Z1
20WP	16ALL	3	TO->FROM	G17_109	BUFFALO - JAMESTOWN 345KV CKT 1	716.8	0.10467	105.591	CENTER - CNTSHNT3 345.00 345KV CKT Z1
20WP	16ALL	3	TO->FROM	G17_109	BUFFALO - JAMESTOWN 345KV CKT 1	716.8	0.10467	105.591	CNTSHNT3 345.00 - PRAIRIE3 345.00 345KV CKT 1
25SP	16ALL	3	TO->FROM	G17_109	BUFFALO - JAMESTOWN 345KV CKT 1	704.9	0.10465	109.6275	GROTON - GROTON-LNX3 345.00 345KV CKT Z
25SP	16ALL	3	TO->FROM	G17_109	BUFFALO - JAMESTOWN 345KV CKT 1	704.9	0.10465	109.6275	GROTON-LNX3 345.00 - LELAND1-LNX3345.00 345KV CKT 1
25SP	16ALL	3	TO->FROM	G17_109	BUFFALO - JAMESTOWN 345KV CKT 1	704.9	0.10465	109.8403	LELAND OLDS - LELAND1-LNX3345.00 345KV CKT Z
25SP	16ALL	3	TO->FROM	G17_109	BUFFALO - JAMESTOWN 345KV CKT 1	704.9	0.10465	109.8544	P12:345:UMZB:# 109 #: LOS GRT IN ND. LOS GRT
25SP	16ALL	3	TO->FROM	G17_109	BUFFALO - JAMESTOWN 345KV CKT 1	704.9	0.1044	108.8813	HURON (BD 90343-A) 345/230/13.8KV TRANSFORMER CKT 1
25SP	16ALL	3	TO->FROM	G17_109	BUFFALO - JAMESTOWN 345KV CKT 1	704.9	0.1044	108.8813	P13:345:UMZB:# 244 #: BD IN SD. LOSS OF TX
25SP	16ALL	3	TO->FROM	G17_109	BUFFALO - JAMESTOWN 345KV CKT 1	704.9	0.1044	108.8813	ANTELOP-LNX3345.00 - BRDLAND-LNX3345.00 345KV CKT 1
25SP	16ALL	3	TO->FROM	G17_109	BUFFALO - JAMESTOWN 345KV CKT 1	704.9	0.1044	108.9947	ANTELOP-LNX3345.00 - ANTELOPE VALLEY 345KV CKT Z
25SP	16ALL	3	TO->FROM	G17_109	BUFFALO - JAMESTOWN 345KV CKT 1	704.9	0.1044	109.0231	P12:345:UMZB:# 102 #: AVS BD IN ND. AVS BRD LR
25SP	16ALL	3	TO->FROM	G17_109	BUFFALO - JAMESTOWN 345KV CKT 1	704.9	0.1044	109.0373	P12:345:UMZB:# 103 #: BD IN SD. LOSS OF LINE
20SP	16ALL	3	TO->FROM	G17_109	BUFFALO - JAMESTOWN 345KV CKT 1	704.8	0.10435	104.3184	GROTON - GROTON-LNX3 345.00 345KV CKT Z
20SP	16ALL	3	TO->FROM	G17_109	BUFFALO - JAMESTOWN 345KV CKT 1	704.8	0.10435	104.3184	GROTON-LNX3 345.00 - LELAND1-LNX3345.00 345KV CKT 1
20SP	16ALL	3	TO->FROM	G17_109	BUFFALO - JAMESTOWN 345KV CKT 1	704.8	0.10435	104.517	LELAND OLDS - LELAND1-LNX3345.00 345KV CKT Z
20SP	16ALL	3	TO->FROM	G17_109	BUFFALO - JAMESTOWN 345KV CKT 1	704.8	0.10435	104.5312	P12:345:UMZB:# 109 #: LOS GRT IN ND. LOS GRT
17SP	16ALL	3	TO->FROM	G17_109	BUFFALO - JAMESTOWN 345KV CKT 1	704.4	0.10434	103.456	GROTON-LNX3 345.00 - LELAND1-LNX3345.00 345KV CKT 1
17SP	16ALL	3	TO->FROM	G17_109	BUFFALO - JAMESTOWN 345KV CKT 1	704.4	0.10434	103.456	GROTON - GROTON-LNX3 345.00 345KV CKT Z
17SP	16ALL	3	TO->FROM	G17_109	BUFFALO - JAMESTOWN 345KV CKT 1	704.4	0.10434	103.6831	LELAND OLDS - LELAND1-LNX3345.00 345KV CKT Z

SEASON	GROUP	SCENARIO	DIRECTION	SOURCE	MONITORED ELEMENT	RATE (MVA)	TDF	CONTINGENCY LOADING %	CONTINGENCY
17SP	16ALL	3	TO->FROM	G17_109	BUFFALO - JAMESTOWN 345KV CKT 1	704.4	0.10434	103.7115	P12:345:UMZB:# 109 #: LOS GRT IN ND. LOS GRT
25SP	16ALL	3	TO->FROM	G17_109	BUFFALO - JAMESTOWN 345KV CKT 1	704.9	0.10418	109.0294	FT THOMPSON - FTTHOM1-LNX3345.00 345KV CKT Z
25SP	16ALL	3	TO->FROM	G17_109	BUFFALO - JAMESTOWN 345KV CKT 1	704.9	0.10418	109.0294	FTTHOM1-LNX3345.00 - G16-017-TAP 345.00 345KV CKT 1
20SP	16ALL	3	TO->FROM	G17_109	BUFFALO - JAMESTOWN 345KV CKT 1	704.8	0.10412	103.601	HURON (BD 90343-A) 345/230/13.8KV TRANSFORMER CKT 1
20SP	16ALL	3	TO->FROM	G17_109	BUFFALO - JAMESTOWN 345KV CKT 1	704.8	0.10412	103.601	P13:345:UMZB:# 244 #: BD IN SD. LOSS OF TX
20SP	16ALL	3	TO->FROM	G17_109	BUFFALO - JAMESTOWN 345KV CKT 1	704.8	0.10412	103.601	ANTELOP-LNX3345.00 - BRDLAND-LNX3345.00 345KV CKT 1
20SP	16ALL	3	TO->FROM	G17_109	BUFFALO - JAMESTOWN 345KV CKT 1	704.8	0.10412	103.601	BRDLAND-LNX3345.00 - HURON 345KV CKT Z
20SP	16ALL	3	TO->FROM	G17_109	BUFFALO - JAMESTOWN 345KV CKT 1	704.8	0.10412	103.7145	ANTELOP-LNX3345.00 - ANTELOPE VALLEY 345KV CKT Z
20SP	16ALL	3	TO->FROM	G17_109	BUFFALO - JAMESTOWN 345KV CKT 1	704.8	0.10412	103.7429	P12:345:UMZB:# 103 #: BD IN SD. LOSS OF LINE
20SP	16ALL	3	TO->FROM	G17_109	BUFFALO - JAMESTOWN 345KV CKT 1	704.8	0.10412	103.7429	P12:345:UMZB:# 102 #: AVS BD IN ND. AVS BRD LR
17SP	16ALL	3	TO->FROM	G17_109	BUFFALO - JAMESTOWN 345KV CKT 1	704.4	0.104	102.506	BROADLAND - HURON 230KV CKT 1
17SP	16ALL	3	TO->FROM	G17_109	BUFFALO - JAMESTOWN 345KV CKT 1	704.4	0.104	102.5202	HURON (BD 90343-A) 345/230/13.8KV TRANSFORMER CKT 1
17SP	16ALL	3	TO->FROM	G17_109	BUFFALO - JAMESTOWN 345KV CKT 1	704.4	0.104	102.5202	P13:345:UMZB:# 244 #: BD IN SD. LOSS OF TX
17SP	16ALL	3	TO->FROM	G17_109	BUFFALO - JAMESTOWN 345KV CKT 1	704.4	0.104	102.5202	ANTELOP-LNX3345.00 - BRDLAND-LNX3345.00 345KV CKT 1
17SP	16ALL	3	TO->FROM	G17_109	BUFFALO - JAMESTOWN 345KV CKT 1	704.4	0.104	102.5202	BRDLAND-LNX3345.00 - HURON 345KV CKT Z
17SP	16ALL	3	TO->FROM	G17_109	BUFFALO - JAMESTOWN 345KV CKT 1	704.4	0.104	102.6479	ANTELOP-LNX3345.00 - ANTELOPE VALLEY 345KV CKT Z
17SP	16ALL	3	TO->FROM	G17_109	BUFFALO - JAMESTOWN 345KV CKT 1	704.4	0.104	102.6763	P12:345:UMZB:# 103 #: BD IN SD. LOSS OF LINE
17SP	16ALL	3	TO->FROM	G17_109	BUFFALO - JAMESTOWN 345KV CKT 1	704.4	0.104	102.6763	P12:345:UMZB:# 102 #: AVS BD IN ND. AVS BRD LR
20SP	16ALL	3	TO->FROM	G17_109	BUFFALO - JAMESTOWN 345KV CKT 1	704.8	0.10391	103.7492	FTTHOM1-LNX3345.00 - G16-017-TAP 345.00 345KV CKT 1
20SP	16ALL	3	TO->FROM	G17_109	BUFFALO - JAMESTOWN 345KV CKT 1	704.8	0.10391	103.7492	FT THOMPSON - FTTHOM1-LNX3345.00 345KV CKT Z
17SP	16ALL	3	TO->FROM	G17_109	BUFFALO - JAMESTOWN 345KV CKT 1	704.4	0.10368	102.5213	FT THOMPSON - FTTHOM1-LNX3345.00 345KV CKT Z
17SP	16ALL	3	TO->FROM	G17_109	BUFFALO - JAMESTOWN 345KV CKT 1	704.4	0.10368	102.5213	FTTHOM1-LNX3345.00 - G16-017-TAP 345.00 345KV CKT 1
25SP	16ALL	3	TO->FROM	G17_109	BUFFALO - JAMESTOWN 345KV CKT 1	704.9	0.1017	108.8114	FARGO - SHEYNNE 230KV CKT 1
20SP	16ALL	3	TO->FROM	G17_109	BUFFALO - JAMESTOWN 345KV CKT 1	704.8	0.10148	103.7038	FARGO - SHEYNNE 230KV CKT 1
17SP	16ALL	3	TO->FROM	G17_109	BUFFALO - JAMESTOWN 345KV CKT 1	704.4	0.10082	115.0801	FORBES - ROSEAU 500KV CKT 1
17SP	16ALL	3	TO->FROM	G17_109	BUFFALO - JAMESTOWN 345KV CKT 1	704.4	0.10082	115.5344	ROSEAU - ROSEAUM 2 500.00 500KV CKT 1
17SP	16ALL	3	TO->FROM	G17_109	BUFFALO - JAMESTOWN 345KV CKT 1	704.4	0.10082	115.5344	ROSEAU - ROSEAUM 2 500.00 500KV CKT 1
17SP	16ALL	3	TO->FROM	G17_109	BUFFALO - JAMESTOWN 345KV CKT 1	704.4	0.10082	115.9744	RIEL - ROSEAU 500KV CKT 1
25SP	16ALL	3	TO->FROM	G17_109	BUFFALO - JAMESTOWN 345KV CKT 1	704.9	0.10081	120.3076	FORBES - ROSEAU 500KV CKT 1
25SP	16ALL	3	TO->FROM	G17_109	BUFFALO - JAMESTOWN 345KV CKT 1	704.9	0.10081	120.719	ROSEAU - ROSEAUM 2 500.00 500KV CKT 1
25SP	16ALL	3	TO->FROM	G17_109	BUFFALO - JAMESTOWN 345KV CKT 1	704.9	0.10081	120.719	ROSEAU - ROSEAUM 2 500.00 500KV CKT 1
25SP	16ALL	3	TO->FROM	G17_109	BUFFALO - JAMESTOWN 345KV CKT 1	704.9	0.10081	121.1162	RIEL - ROSEAU 500KV CKT 1
20SP	16ALL	3	TO->FROM	G17_109	BUFFALO - JAMESTOWN 345KV CKT 1	704.8	0.10071	116.1578	FORBES - ROSEAU 500KV CKT 1
20SP	16ALL	3	TO->FROM	G17_109	BUFFALO - JAMESTOWN 345KV CKT 1	704.8	0.10071	116.6118	ROSEAU - ROSEAUM 2 500.00 500KV CKT 1
20SP	16ALL	3	TO->FROM	G17_109	BUFFALO - JAMESTOWN 345KV CKT 1	704.8	0.10071	116.6118	ROSEAU - ROSEAUM 2 500.00 500KV CKT 1
20SP	16ALL	3	TO->FROM	G17_109	BUFFALO - JAMESTOWN 345KV CKT 1	704.8	0.10071	117.0517	RIEL - ROSEAU 500KV CKT 1
17G	16ALL	3	TO->FROM	G17_109	BUFFALO - JAMESTOWN 345KV CKT 1	704.9	0.0997	106.1382	FORBES - ROSEAU 500KV CKT 1
17G	16ALL	3	TO->FROM	G17_109	BUFFALO - JAMESTOWN 345KV CKT 1	704.9	0.0997	106.4219	ROSEAU - ROSEAUM 2 500.00 500KV CKT 1
17G	16ALL	3	TO->FROM	G17_109	BUFFALO - JAMESTOWN 345KV CKT 1	704.9	0.0997	106.4219	ROSEAU - ROSEAUM 2 500.00 500KV CKT 1
17G	16ALL	3	TO->FROM	G17_109	BUFFALO - JAMESTOWN 345KV CKT 1	704.9	0.0997	106.7198	RIEL - ROSEAU 500KV CKT 1
16WP	16ALL	3	TO->FROM	G17_109	BUFFALO - JAMESTOWN 345KV CKT 1	716.7	0.09921	102.0086	FORBES - ROSEAU 500KV CKT 1
16WP	16ALL	3	TO->FROM	G17_109	BUFFALO - JAMESTOWN 345KV CKT 1	716.7	0.09921	102.1621	ROSEAU - ROSEAUM 2 500.00 500KV CKT 1
16WP	16ALL	3	TO->FROM	G17_109	BUFFALO - JAMESTOWN 345KV CKT 1	716.7	0.09921	102.1621	ROSEAU - ROSEAUM 2 500.00 500KV CKT 1
16WP	16ALL	3	TO->FROM	G17_109	BUFFALO - JAMESTOWN 345KV CKT 1	716.7	0.09921	102.3296	RIEL - ROSEAU 500KV CKT 1
20WP	16ALL	3	TO->FROM	G17_109	BUFFALO - JAMESTOWN 345KV CKT 1	716.8	0.0987	101.5206	FORBES - ROSEAU 500KV CKT 1
20WP	16ALL	3	TO->FROM	G17_109	BUFFALO - JAMESTOWN 345KV CKT 1	716.8	0.0987	101.688	ROSEAU - ROSEAUM 2 500.00 500KV CKT 1
20WP	16ALL	3	TO->FROM	G17_109	BUFFALO - JAMESTOWN 345KV CKT 1	716.8	0.0987	101.688	ROSEAU - ROSEAUM 2 500.00 500KV CKT 1
20WP	16ALL	3	TO->FROM	G17_109	BUFFALO - JAMESTOWN 345KV CKT 1	716.8	0.0987	101.8555	RIEL - ROSEAU 500KV CKT 1
25SP	16ALL	3	TO->FROM	G17_109	BUFFALO - JAMESTOWN 345KV CKT 1	704.9	0.09352	103.6833	System Intact
25SP	16ALL	3	TO->FROM	G17_109	BUFFALO - JAMESTOWN 345KV CKT 1	704.9	0.08175	108.576	MANDAN 4 230.00 - MPC02100TAP4230.00 230KV CKT 1
25SP	00NR	3	TO->FROM	G17_109	BUFFALO - JAMESTOWN 345KV CKT 1	704.9	0.04938	113.1085	CNTSHNT3 345.00 - PRAIRIE3 345.00 345KV CKT 1
25SP	00NR	3	TO->FROM	G17_109	BUFFALO - JAMESTOWN 345KV CKT 1	704.9	0.04938	113.1085	CENTER - CNTSHNT3 345.00 345KV CKT Z1
20SP	00NR	3	TO->FROM	G17_109	BUFFALO - JAMESTOWN 345KV CKT 1	704.7	0.04928	109.333	CENTER - CNTSHNT3 345.00 345KV CKT Z1
20SP	00NR	3	TO->FROM	G17_109	BUFFALO - JAMESTOWN 345KV CKT 1	704.7	0.04928	109.333	CNTSHNT3 345.00 - PRAIRIE3 345.00 345KV CKT 1
17SP	00NR	3	TO->FROM	G17_109	BUFFALO - JAMESTOWN 345KV CKT 1	705	0.04898	107.3154	CNTSHNT3 345.00 - PRAIRIE3 345.00 345KV CKT 1

SEASON	GROUP	SCENARIO	DIRECTION	SOURCE	MONITORED ELEMENT	RATE (MVA)	TDF	CONTINGENCY LOADING %	CONTINGENCY
17SP	00NR	3	TO->FROM	G17_109	BUFFALO - JAMESTOWN 345KV CKT 1	705	0.04898	107.3154	CENTER - CNTSHNT3 345.00 345KV CKT Z1
25SP	00NR	3	TO->FROM	G17_109	BUFFALO - JAMESTOWN 345KV CKT 1	704.9	0.04891	102.3055	P12:345:UMZB:# 103 #: BD IN SD. LOSS OF LINE
25SP	00NR	3	TO->FROM	G17_109	BUFFALO - JAMESTOWN 345KV CKT 1	704.9	0.04872	102.4245	FT THOMPSON - FTTHOM1-LNX3345.00 345KV CKT Z
25SP	00NR	3	TO->FROM	G17_109	BUFFALO - JAMESTOWN 345KV CKT 1	704.9	0.04872	102.4245	FTTHOM1-LNX3345.00 - G16-017-TAP 345.00 345KV CKT 1
25SP	00NR	3	TO->FROM	G17_109	BUFFALO - JAMESTOWN 345KV CKT 1	704.9	0.04797	102.3337	LELAND OLDS - LELAND1-LNX3345.00 345KV CKT Z
25SP	00NR	3	TO->FROM	G17_109	BUFFALO - JAMESTOWN 345KV CKT 1	704.9	0.04797	102.3479	P12:345:UMZB:# 109 #: LOS GRT IN ND. LOS GRT
17G	16NR	3	TO->FROM	G17_109	BUFFALO - JAMESTOWN 345KV CKT 1	703.9	0.04617	106.8723	CNTSHNT3 345.00 - PRAIRIE3 345.00 345KV CKT 1
17G	16NR	3	TO->FROM	G17_109	BUFFALO - JAMESTOWN 345KV CKT 1	703.9	0.04617	106.8723	CENTER - CNTSHNT3 345.00 345KV CKT Z1
20SP	00NR	3	TO->FROM	G17_109	BUFFALO - JAMESTOWN 345KV CKT 1	704.7	0.04578	112.8636	FORBES - ROSEAU 500KV CKT 1
20SP	00NR	3	TO->FROM	G17_109	BUFFALO - JAMESTOWN 345KV CKT 1	704.7	0.04578	113.3035	ROSEAU - ROSEAUM 2 500.00 500KV CKT 1
20SP	00NR	3	TO->FROM	G17_109	BUFFALO - JAMESTOWN 345KV CKT 1	704.7	0.04578	113.3035	ROSEAU - ROSEAUM 2 500.00 500KV CKT 1
20SP	00NR	3	TO->FROM	G17_109	BUFFALO - JAMESTOWN 345KV CKT 1	704.7	0.04578	113.7292	RIEL - ROSEAU 500KV CKT 1
25SP	00NR	3	TO->FROM	G17_109	BUFFALO - JAMESTOWN 345KV CKT 1	704.9	0.04577	114.4625	FORBES - ROSEAU 500KV CKT 1
25SP	00NR	3	TO->FROM	G17_109	BUFFALO - JAMESTOWN 345KV CKT 1	704.9	0.04577	114.8456	ROSEAU - ROSEAUM 2 500.00 500KV CKT 1
25SP	00NR	3	TO->FROM	G17_109	BUFFALO - JAMESTOWN 345KV CKT 1	704.9	0.04577	114.8456	ROSEAU - ROSEAUM 2 500.00 500KV CKT 1
25SP	00NR	3	TO->FROM	G17_109	BUFFALO - JAMESTOWN 345KV CKT 1	704.9	0.04577	115.2286	RIEL - ROSEAU 500KV CKT 1
17SP	00NR	3	TO->FROM	G17_109	BUFFALO - JAMESTOWN 345KV CKT 1	705	0.04552	111.1158	FORBES - ROSEAU 500KV CKT 1
17SP	00NR	3	TO->FROM	G17_109	BUFFALO - JAMESTOWN 345KV CKT 1	705	0.04552	111.5413	ROSEAU - ROSEAUM 2 500.00 500KV CKT 1
17SP	00NR	3	TO->FROM	G17_109	BUFFALO - JAMESTOWN 345KV CKT 1	705	0.04552	111.5413	ROSEAU - ROSEAUM 2 500.00 500KV CKT 1
17SP	00NR	3	TO->FROM	G17_109	BUFFALO - JAMESTOWN 345KV CKT 1	705	0.04552	111.9669	RIEL - ROSEAU 500KV CKT 1
25SP	00NR	3	TO->FROM	G17_109	BUFFALO - JAMESTOWN 345KV CKT 1	704.9	0.04526	102.1681	SQUARE BUTTE - STANTON 230KV CKT 1
25SP	00NR	3	TO->FROM	G17_109	BUFFALO - JAMESTOWN 345KV CKT 1	704.9	0.04524	102.2665	G09_001IST 345.00 - WATERTOWN 345KV CKT 1
25SP	00NR	3	TO->FROM	G17_109	BUFFALO - JAMESTOWN 345KV CKT 1	704.9	0.04512	104.0769	FARGO - SHEYNNE 230KV CKT 1
20SP	00NR	3	TO->FROM	G17_109	BUFFALO - JAMESTOWN 345KV CKT 1	704.7	0.04508	101.5788	FARGO - SHEYNNE 230KV CKT 1
25SP	00NR	3	TO->FROM	G17_109	BUFFALO - JAMESTOWN 345KV CKT 1	704.9	0.04485	102.7312	FARGO - JAMES TOWN 230KV CKT 1
25SP	00NR	3	TO->FROM	G17_109	BUFFALO - JAMESTOWN 345KV CKT 1	704.9	0.04482	102.134	PRAIRIE - WINGER 230KV CKT 1
25SP	00NR	3	TO->FROM	G17_109	BUFFALO - JAMESTOWN 345KV CKT 1	704.9	0.0448	102.6154	FARGO - JAMES TOWN 230KV CKT 2
25SP	00NR	3	TO->FROM	G17_109	BUFFALO - JAMESTOWN 345KV CKT 1	704.9	0.0435	102.1166	GRPRAR1-LNX3345.00 - HOLT.CO3 345.00 345KV CKT 1
25SP	00NR	3	TO->FROM	G17_109	BUFFALO - JAMESTOWN 345KV CKT 1	704.9	0.0435	102.145	GRPRAR1-LNX3345.00 - YANKTON 345KV CKT Z
17G	16NR	3	TO->FROM	G17_109	BUFFALO - JAMESTOWN 345KV CKT 1	703.9	0.04284	107.5023	FORBES - ROSEAU 500KV CKT 1
17G	16NR	3	TO->FROM	G17_109	BUFFALO - JAMESTOWN 345KV CKT 1	703.9	0.04284	107.7864	ROSEAU - ROSEAUM 2 500.00 500KV CKT 1
17G	16NR	3	TO->FROM	G17_109	BUFFALO - JAMESTOWN 345KV CKT 1	703.9	0.04284	107.7864	ROSEAU - ROSEAUM 2 500.00 500KV CKT 1
17G	16NR	3	TO->FROM	G17_109	BUFFALO - JAMESTOWN 345KV CKT 1	703.9	0.04284	108.0564	RIEL - ROSEAU 500KV CKT 1
25SP	00NR	3	TO->FROM	G17_109	BUFFALO - JAMESTOWN 345KV CKT 1	704.9	0.04178	105.0886	HANKINSON - WAHPETON 230KV CKT 1
20SP	00NR	3	TO->FROM	G17_109	BUFFALO - JAMESTOWN 345KV CKT 1	704.7	0.04172	102.1925	HANKINSON - WAHPETON 230KV CKT 1
25SP	16ALL	3	FROM->TO	G17_109	BUFFALO (BUFFALO3) 345/115/41.6KV TRANSFORMER CKT 1	222.1	0.03045	120.832	BISON 3 345.00 - BUFFALO 345KV CKT 1
25SP	16ALL	3	FROM->TO	G17_109	BUFFALO (BUFFALO3) 345/115/41.6KV TRANSFORMER CKT 1	221.8	0.03045	118.9666	BISON 3 345.00 - BUFFALO 345KV CKT 1
17SP	16ALL	3	FROM->TO	G17_109	BUFFALO (BUFFALO3) 345/115/41.6KV TRANSFORMER CKT 1	222.6	0.03039	113.0458	BISON 3 345.00 - BUFFALO 345KV CKT 1
17SP	16ALL	3	FROM->TO	G17_109	BUFFALO (BUFFALO3) 345/115/41.6KV TRANSFORMER CKT 1	222.5	0.03039	111.2539	BISON 3 345.00 - BUFFALO 345KV CKT 1
20SP	16ALL	3	FROM->TO	G17_109	BUFFALO (BUFFALO3) 345/115/41.6KV TRANSFORMER CKT 1	222	0.03039	114.836	BISON 3 345.00 - BUFFALO 345KV CKT 1
20SP	16ALL	3	FROM->TO	G17_109	BUFFALO (BUFFALO3) 345/115/41.6KV TRANSFORMER CKT 1	221.8	0.03039	113.0911	BISON 3 345.00 - BUFFALO 345KV CKT 1
17G	16ALL	3	FROM->TO	G17_109	BUFFALO (BUFFALO3) 345/115/41.6KV TRANSFORMER CKT 1	222.6	0.03005	107.2327	BISON 3 345.00 - BUFFALO 345KV CKT 1
17G	16ALL	3	FROM->TO	G17_109	BUFFALO (BUFFALO3) 345/115/41.6KV TRANSFORMER CKT 1	222.4	0.03005	105.036	BISON 3 345.00 - BUFFALO 345KV CKT 1
16WP	16ALL	3	FROM->TO	G17_109	BUFFALO (BUFFALO3) 345/115/41.6KV TRANSFORMER CKT 1	222.2	0.02992	111.8164	BISON 3 345.00 - BUFFALO 345KV CKT 1
16WP	16ALL	3	FROM->TO	G17_109	BUFFALO (BUFFALO3) 345/115/41.6KV TRANSFORMER CKT 1	221.8	0.02992	108.817	BISON 3 345.00 - BUFFALO 345KV CKT 1
20WP	16ALL	3	FROM->TO	G17_109	BUFFALO (BUFFALO3) 345/115/41.6KV TRANSFORMER CKT 1	222.1	0.02984	111.9406	BISON 3 345.00 - BUFFALO 345KV CKT 1
20WP	16ALL	3	FROM->TO	G17_109	BUFFALO (BUFFALO3) 345/115/41.6KV TRANSFORMER CKT 1	221.8	0.02984	108.7556	BISON 3 345.00 - BUFFALO 345KV CKT 1
17SP	16ALL	3	FROM->TO	G17_109	CIRCLE - DAWSON CREEK 115KV CKT 1	77.8	0.04122	101.0643	CULBERTSN E7115.00 - WILISTON 115KV CKT 1
17G	16ALL	3	FROM->TO	G17_109	CIRCLE - DAWSON CREEK 115KV CKT 1	78.7	0.04078	104.0051	CULBERTSN E7115.00 - WILISTON 115KV CKT 1
25SP	16ALL	3	TO->FROM	G17_109	CIRCLE - G12_012IST 115.00 115KV CKT 1	77.2	0.0413	117.5648	CULBERTSN E7115.00 - WILISTON 115KV CKT 1
20SP	16ALL	3	TO->FROM	G17_109	CIRCLE - G12_012IST 115.00 115KV CKT 1	77.6	0.04126	118.0979	CULBERTSN E7115.00 - WILISTON 115KV CKT 1
17SP	16ALL	3	TO->FROM	G17_109	CIRCLE - G12_012IST 115.00 115KV CKT 1	77.1	0.04122	120.3995	CULBERTSN E7115.00 - WILISTON 115KV CKT 1
20WP	16ALL	3	TO->FROM	G17_109	CIRCLE - G12_012IST 115.00 115KV CKT 1	86.9	0.041	115.1208	CULBERTSN E7115.00 - WILISTON 115KV CKT 1
16WP	16ALL	3	TO->FROM	G17_109	CIRCLE - G12_012IST 115.00 115KV CKT 1	86.5	0.04095	107.8844	CULBERTSN E7115.00 - WILISTON 115KV CKT 1
17G	16ALL	3	TO->FROM	G17_109	CIRCLE - G12_012IST 115.00 115KV CKT 1	76.7	0.04078	127.5776	CULBERTSN E7115.00 - WILISTON 115KV CKT 1

SEASON	GROUP	SCENARIO	DIRECTION	SOURCE	MONITORED ELEMENT	RATE (MVA)	TDF	CONTINGENCY LOADING %	CONTINGENCY
20L	16ALL	3	TO->FROM	G17_109	CIRCLE - G12_012IST 115.00 115KV CKT 1	77.3	0.04023	113.4955	CULBERTSN E7115.00 - WILISTON 115KV CKT 1
17SP	16ALL	3	FROM->TO	G17_109	CULBERTSN E7115.00 - WILISTON 115KV CKT 1	149.2	0.19007	102.7748	BELFIELD - MEDORA 230KV CKT 1
17SP	16ALL	3	FROM->TO	G17_109	CULBERTSN E7115.00 - WILISTON 115KV CKT 1	149.2	0.19007	104.3164	BEAVERHILL4 230.00 - MEDORA 230KV CKT 1
20WP	16ALL	3	FROM->TO	G17_109	CULBERTSN E7115.00 - WILISTON 115KV CKT 1	148.8	0.19005	100.6183	BELFIELD - MEDORA 230KV CKT 1
20WP	16ALL	3	FROM->TO	G17_109	CULBERTSN E7115.00 - WILISTON 115KV CKT 1	148.8	0.19005	102.5	BEAVERHILL4 230.00 - MEDORA 230KV CKT 1
16WP	16ALL	3	FROM->TO	G17_109	CULBERTSN E7115.00 - WILISTON 115KV CKT 1	148.6	0.18966	104.4926	BELFIELD - MEDORA 230KV CKT 1
16WP	16ALL	3	FROM->TO	G17_109	CULBERTSN E7115.00 - WILISTON 115KV CKT 1	148.6	0.18966	106.3095	BEAVERHILL4 230.00 - MEDORA 230KV CKT 1
17G	16ALL	3	FROM->TO	G17_109	CULBERTSN E7115.00 - WILISTON 115KV CKT 1	149.8	0.18932	107.7036	BELFIELD - MEDORA 230KV CKT 1
17G	16ALL	3	FROM->TO	G17_109	CULBERTSN E7115.00 - WILISTON 115KV CKT 1	149.8	0.18932	109.239	BEAVERHILL4 230.00 - MEDORA 230KV CKT 1
17G	16ALL	3	FROM->TO	G17_109	CULBERTSN E7115.00 - WILISTON 115KV CKT 1	149.8	0.14358	100.1656	BELFIELD - CHARLIE CREEK 345KV CKT 1
17G	16ALL	3	FROM->TO	G17_109	CULBERTSN E7115.00 - WILISTON 115KV CKT 1	149.8	0.13702	101.1535	DAWSON CREEK - LEWIS & CLARK 115KV CKT 1
20WP	16ALL	3	FROM->TO	G17_109	CULBERTSN E7115.00 - WILISTON 115KV CKT 1	148.8	0.11293	100.5027	CIRCLE - G12_012IST 115.00 115KV CKT 1
17G	16ALL	3	FROM->TO	G17_109	CULBERTSN E7115.00 - WILISTON 115KV CKT 1	149.8	0.11222	102.8545	CIRCLE - G12_012IST 115.00 115KV CKT 1
17SP	16ALL	3	FROM->TO	G17_109	CULBERTSN E7115.00 - WILISTON 115KV CKT 1	149.2	0.05495	102.4906	COALHILL4 230.00 - G17109_T(P) 230.00 230KV CKT 1
17SP	16ALL	3	FROM->TO	G17_109	CULBERTSN E7115.00 - WILISTON 115KV CKT 1	149.2	0.05495	102.4906	COALHILL4 230.00 - FT PECK 230KV CKT 1
16WP	16ALL	3	FROM->TO	G17_109	CULBERTSN E7115.00 - WILISTON 115KV CKT 1	148.6	0.05418	101.0794	COALHILL4 230.00 - FT PECK 230KV CKT 1
16WP	16ALL	3	FROM->TO	G17_109	CULBERTSN E7115.00 - WILISTON 115KV CKT 1	148.6	0.05418	101.0794	COALHILL4 230.00 - G17109_T(P) 230.00 230KV CKT 1
17G	16ALL	3	FROM->TO	G17_109	CULBERTSN E7115.00 - WILISTON 115KV CKT 1	149.8	0.05363	105.9973	COALHILL4 230.00 - G17109_T(P) 230.00 230KV CKT 1
17G	16ALL	3	FROM->TO	G17_109	CULBERTSN E7115.00 - WILISTON 115KV CKT 1	149.8	0.05363	105.9973	COALHILL4 230.00 - FT PECK 230KV CKT 1
16WP	16ALL	3	TO->FROM	G17_109	CULBERTSON - POPLAR 115KV CKT 1	87.9	0.1899	100.7645	BEAVERHILL4 230.00 - MEDORA 230KV CKT 1
17G	16ALL	3	TO->FROM	G17_109	CULBERTSON - POPLAR 115KV CKT 1	88	0.18959	101.6455	BEAVERHILL4 230.00 - MEDORA 230KV CKT 1
17SP	16ALL	3	FROM->TO	G17_109	DAWSON CREEK - FALLON 115KV CKT 1	87.7	0.08221	114.5633	DAWSON CREEK - MILES CITY EAST 230KV CKT 1
25SP	16ALL	3	FROM->TO	G17_109	DAWSON CREEK - FALLON 115KV CKT 1	88	0.08213	133.9182	DAWSON CREEK - MILES CITY EAST 230KV CKT 1
16WP	16ALL	3	FROM->TO	G17_109	DAWSON CREEK - FALLON 115KV CKT 1	87.9	0.08209	106.7395	DAWSON CREEK - MILES CITY EAST 230KV CKT 1
20SP	16ALL	3	FROM->TO	G17_109	DAWSON CREEK - FALLON 115KV CKT 1	87.9	0.08207	124.8328	DAWSON CREEK - MILES CITY EAST 230KV CKT 1
20WP	16ALL	3	FROM->TO	G17_109	DAWSON CREEK - FALLON 115KV CKT 1	88	0.08192	109.5091	DAWSON CREEK - MILES CITY EAST 230KV CKT 1
20L	16ALL	3	FROM->TO	G17_109	DAWSON CREEK - FALLON 115KV CKT 1	87.8	0.08151	102.6241	DAWSON CREEK - MILES CITY EAST 230KV CKT 1
17G	16ALL	3	FROM->TO	G17_109	DAWSON CREEK - LEWIS & CLARK 115KV CKT 1	101	0.19473	100.4436	BAKER - LTLMISS 230KV CKT 1
17G	16ALL	3	FROM->TO	G17_109	DAWSON CREEK - LEWIS & CLARK 115KV CKT 1	101	0.19417	111.905	BELFIELD - CHARLIE CREEK 345KV CKT 1
17SP	16ALL	3	FROM->TO	G17_109	DAWSON CREEK - LEWIS & CLARK 115KV CKT 1	101	0.17108	101.802	CULBERTSN E7115.00 - WILISTON 115KV CKT 1
17G	16ALL	3	FROM->TO	G17_109	DAWSON CREEK - LEWIS & CLARK 115KV CKT 1	101	0.17065	100.0475	CULBERTSN E7115.00 - CULBERTSON 115KV CKT 1
17G	16ALL	3	FROM->TO	G17_109	DAWSON CREEK - LEWIS & CLARK 115KV CKT 1	101	0.17065	104.404	CULBERTSON - POPLAR 115KV CKT 1
17G	16ALL	3	FROM->TO	G17_109	DAWSON CREEK - LEWIS & CLARK 115KV CKT 1	101	0.17065	106.9782	POPLAR - WOLF POINT 115KV CKT 1
17G	16ALL	3	FROM->TO	G17_109	DAWSON CREEK - LEWIS & CLARK 115KV CKT 1	101	0.17058	123.5842	CULBERTSN E7115.00 - WILISTON 115KV CKT 1
17G	16ALL	3	FROM->TO	G17_109	DAWSON CREEK - LEWIS & CLARK 115KV CKT 1	101	0.15226	101.4574	BISON - MAURINE 230KV CKT 1
17G	16ALL	3	FROM->TO	G17_109	DAWSON CREEK - LEWIS & CLARK 115KV CKT 1	101	0.15226	102.3485	BISON - HETINGER 230KV CKT 1
17G	16ALL	3	FROM->TO	G17_109	DAWSON CREEK - LEWIS & CLARK 115KV CKT 1	101	0.14993	105.8851	BELFIELD - DAGLUM 4230.00 230KV CKT 1
17G	16ALL	3	FROM->TO	G17_109	DAWSON CREEK - LEWIS & CLARK 115KV CKT 1	101	0.13636	108.1149	CHARLIE CREEK (CCR KV2A) 345/115/13.8KV TRANSFORMER CKT 1
25SP	16ALL	3	FROM->TO	G17_109	DICKINSON (DICKNSON2) 230/115/13.8KV TRANSFORMER CKT 2	125	0.04077	102.9568	DICKINSON (KW1A 100) 230/115/13.8KV TRANSFORMER CKT 1
25SP	16ALL	3	FROM->TO	G17_109	DICKINSON (KW1A 100) 230/115/13.8KV TRANSFORMER CKT 1	125	0.04077	101.5968	DICKINSON (DICKNSON2) 230/115/13.8KV TRANSFORMER CKT 2
25SP	16ALL	3	FROM->TO	G17_109	DICKINSON (KW1A 100) 230/115/13.8KV TRANSFORMER CKT 1	125	0.04077	101.6768	DICKINSON (DICKNSON2) 230/115/13.8KV TRANSFORMER CKT 2
20L	16ALL	3	TO->FROM	G17_109	ELK CREEK - NEWELL 115KV CKT 1	89.3	0.05694	101.8947	MAURINE - NUNDRWD-LNX3230.00 230KV CKT 1
20L	16ALL	3	TO->FROM	G17_109	ELK CREEK - NEWELL 115KV CKT 1	89.3	0.05694	101.8947	NUNDRWD - NUNDRWD-LNX3230.00 230KV CKT Z
20L	16ALL	3	FROM->TO	G17_109	ELK CREEK - RAPID CITY 115KV CKT 1	87.2	0.05694	100.1055	MAURINE - NUNDRWD-LNX3230.00 230KV CKT 1
20L	16ALL	3	FROM->TO	G17_109	ELK CREEK - RAPID CITY 115KV CKT 1	87.2	0.05694	100.1055	NUNDRWD - NUNDRWD-LNX3230.00 230KV CKT Z
25SP	16ALL	3	TO->FROM	G17_109	ELLENDLMVP4 230.00 - J316_SUB 230.00 230KV CKT 1	342.4	0.06119	138.5199	ELLENDLMVP4 230.00 - MERRCRT4 230.00 230KV CKT 1
20SP	16ALL	3	TO->FROM	G17_109	ELLENDLMVP4 230.00 - J316_SUB 230.00 230KV CKT 1	341.9	0.06101	134.9272	ELLENDLMVP4 230.00 - MERRCRT4 230.00 230KV CKT 1
17SP	16ALL	3	TO->FROM	G17_109	ELLENDLMVP4 230.00 - J316_SUB 230.00 230KV CKT 1	341.7	0.06089	142.3424	ELLENDLMVP4 230.00 - MERRCRT4 230.00 230KV CKT 1
20WP	16ALL	3	TO->FROM	G17_109	ELLENDLMVP4 230.00 - J316_SUB 230.00 230KV CKT 1	342	0.06014	123.3251	ELLENDLMVP4 230.00 - MERRCRT4 230.00 230KV CKT 1
16WP	16ALL	3	TO->FROM	G17_109	ELLENDLMVP4 230.00 - J316_SUB 230.00 230KV CKT 1	340.8	0.06004	134.0517	ELLENDLMVP4 230.00 - MERRCRT4 230.00 230KV CKT 1
17G	16ALL	3	TO->FROM	G17_109	ELLENDLMVP4 230.00 - J316_SUB 230.00 230KV CKT 1	341.7	0.05972	138.1364	ELLENDLMVP4 230.00 - MERRCRT4 230.00 230KV CKT 1
20L	16ALL	3	TO->FROM	G17_109	ELLENDLMVP4 230.00 - J316_SUB 230.00 230KV CKT 1	342.3	0.05641	117.5507	ELLENDLMVP4 230.00 - MERRCRT4 230.00 230KV CKT 1
25SP	16ALL	3	TO->FROM	G17_109	ELLENDLMVP4 230.00 - J316_SUB 230.00 230KV CKT 1	342.4	0.04132	100.9708	GROTON - GROTON-LNX3 345.00 345KV CKT Z
25SP	16ALL	3	TO->FROM	G17_109	ELLENDLMVP4 230.00 - J316_SUB 230.00 230KV CKT 1	342.4	0.04132	100.9708	GROTON-LNX3 345.00 - LELAND1-LNX3345.00 345KV CKT 1
25SP	16ALL	3	TO->FROM	G17_109	ELLENDLMVP4 230.00 - J316_SUB 230.00 230KV CKT 1	342.4	0.04132	101.146	P12:345:UMZB:# 109 #: LOS GRT IN ND. LOS GRT

SEASON	GROUP	SCENARIO	DIRECTION	SOURCE	MONITORED ELEMENT	RATE (MVA)	TDF	CONTINGENCY LOADING %	CONTINGENCY
25SP	16ALL	3	TO->FROM	G17_109	ELLENDLMVP4 230.00 - J316_SUB 230.00 230KV CKT 1	342.4	0.04132	101.2337	LELAND OLDS - LELAND1-LNX3345.00 345KV CKT Z
17SP	16ALL	3	TO->FROM	G17_109	ELLENDLMVP4 230.00 - J316_SUB 230.00 230KV CKT 1	341.7	0.04097	103.2204	GROTON - GROTON-LNX3 345.00 345KV CKT Z
17SP	16ALL	3	TO->FROM	G17_109	ELLENDLMVP4 230.00 - J316_SUB 230.00 230KV CKT 1	341.7	0.04097	103.2204	GROTON-LNX3 345.00 - LELAND1-LNX3345.00 345KV CKT 1
17SP	16ALL	3	TO->FROM	G17_109	ELLENDLMVP4 230.00 - J316_SUB 230.00 230KV CKT 1	341.7	0.04097	103.4252	P12:345:UMZB:# 109 #: LOS GRT IN ND. LOS GRT
17SP	16ALL	3	TO->FROM	G17_109	ELLENDLMVP4 230.00 - J316_SUB 230.00 230KV CKT 1	341.7	0.04097	103.4838	LELAND OLDS - LELAND1-LNX3345.00 345KV CKT Z
25SP	16ALL	3	TO->FROM	G17_109	ELLENDLMVP4 230.00 - J316_SUB 230.00 230KV CKT 1	342.4	0.0405	102.6472	CENTER - JAMESTOWN 345KV CKT 1
20SP	16ALL	3	TO->FROM	G17_109	ELLENDLMVP4 230.00 - J316_SUB 230.00 230KV CKT 1	341.9	0.04039	100.0632	CENTER - JAMESTOWN 345KV CKT 1
17G	16ALL	3	TO->FROM	G17_109	ELLENDLMVP4 230.00 - J316_SUB 230.00 230KV CKT 1	341.7	0.04016	100.6076	GROTON-LNX3 345.00 - LELAND1-LNX3345.00 345KV CKT 1
17G	16ALL	3	TO->FROM	G17_109	ELLENDLMVP4 230.00 - J316_SUB 230.00 230KV CKT 1	341.7	0.04016	100.6076	GROTON - GROTON-LNX3 345.00 345KV CKT Z
17G	16ALL	3	TO->FROM	G17_109	ELLENDLMVP4 230.00 - J316_SUB 230.00 230KV CKT 1	341.7	0.04016	100.7831	P12:345:UMZB:# 109 #: LOS GRT IN ND. LOS GRT
17G	16ALL	3	TO->FROM	G17_109	ELLENDLMVP4 230.00 - J316_SUB 230.00 230KV CKT 1	341.7	0.04016	100.8417	LELAND OLDS - LELAND1-LNX3345.00 345KV CKT Z
17SP	16ALL	3	TO->FROM	G17_109	ELLENDLMVP4 230.00 - J316_SUB 230.00 230KV CKT 1	341.7	0.04015	104.432	CENTER - JAMESTOWN 345KV CKT 1
25SP	16ALL	3	TO->FROM	G17_109	ELLENDLMVP4 230.00 - J316_SUB 230.00 230KV CKT 1	342.4	0.04007	105.4696	BUFFALO - JAMESTOWN 345KV CKT 1
20SP	16ALL	3	TO->FROM	G17_109	ELLENDLMVP4 230.00 - J316_SUB 230.00 230KV CKT 1	341.9	0.03996	102.8605	BUFFALO - JAMESTOWN 345KV CKT 1
17SP	16ALL	3	TO->FROM	G17_109	ELLENDLMVP4 230.00 - J316_SUB 230.00 230KV CKT 1	341.7	0.0398	101.1542	BROADLAND - HURON 230KV CKT 1
17SP	16ALL	3	TO->FROM	G17_109	ELLENDLMVP4 230.00 - J316_SUB 230.00 230KV CKT 1	341.7	0.0398	101.1835	ANTELOP-LNX3345.00 - BRDLAND-LNX3345.00 345KV CKT 1
17SP	16ALL	3	TO->FROM	G17_109	ELLENDLMVP4 230.00 - J316_SUB 230.00 230KV CKT 1	341.7	0.0398	101.1835	BRDLAND-LNX3345.00 - HURON 345KV CKT Z
17SP	16ALL	3	TO->FROM	G17_109	ELLENDLMVP4 230.00 - J316_SUB 230.00 230KV CKT 1	341.7	0.0398	101.1835	P13:345:UMZB:# 244 #: BD IN SD. LOSS OF TX
17SP	16ALL	3	TO->FROM	G17_109	ELLENDLMVP4 230.00 - J316_SUB 230.00 230KV CKT 1	341.7	0.0398	101.1835	HURON (BD 90343-A) 345/230/13.8KV TRANSFORMER CKT 1
17SP	16ALL	3	TO->FROM	G17_109	ELLENDLMVP4 230.00 - J316_SUB 230.00 230KV CKT 1	341.7	0.0398	101.2713	P12:345:UMZB:# 102 #: AVS BD IN ND. AVS BRD LR
17SP	16ALL	3	TO->FROM	G17_109	ELLENDLMVP4 230.00 - J316_SUB 230.00 230KV CKT 1	341.7	0.0398	101.2713	P12:345:UMZB:# 103 #: BD IN SD. LOSS OF LINE
17SP	16ALL	3	TO->FROM	G17_109	ELLENDLMVP4 230.00 - J316_SUB 230.00 230KV CKT 1	341.7	0.0398	101.3006	ANTELOP-LNX3345.00 - ANTELOPE VALLEY 345KV CKT Z
17SP	16ALL	3	TO->FROM	G17_109	ELLENDLMVP4 230.00 - J316_SUB 230.00 230KV CKT 1	341.7	0.03972	106.7626	BUFFALO - JAMESTOWN 345KV CKT 1
17G	16ALL	3	TO->FROM	G17_109	ELLENDLMVP4 230.00 - J316_SUB 230.00 230KV CKT 1	341.7	0.03943	101.3029	CENTER - JAMESTOWN 345KV CKT 1
16WP	16ALL	3	TO->FROM	G17_109	ELLENDLMVP4 230.00 - J316_SUB 230.00 230KV CKT 1	340.8	0.03916	101.5223	BUFFALO - JAMESTOWN 345KV CKT 1
17G	16ALL	3	TO->FROM	G17_109	ELLENDLMVP4 230.00 - J316_SUB 230.00 230KV CKT 1	341.7	0.039	103.7214	BUFFALO - JAMESTOWN 345KV CKT 1
25SP	16ALL	3	TO->FROM	G17_109	ELLENDLMVP4 230.00 - J316_SUB 230.00 230KV CKT 1	342.4	0.03853	101.2395	BISON 3 345.00 - BUFFALO 345KV CKT 1
17SP	16ALL	3	TO->FROM	G17_109	ELLENDLMVP4 230.00 - J316_SUB 230.00 230KV CKT 1	341.7	0.03819	102.8177	BISON 3 345.00 - BUFFALO 345KV CKT 1
25SP	16ALL	3	TO->FROM	G17_109	ELLENDLMVP4 230.00 - J316_SUB 230.00 230KV CKT 1	342.4	0.0372	103.9206	FORBES - ROSEAU 500KV CKT 1
25SP	16ALL	3	TO->FROM	G17_109	ELLENDLMVP4 230.00 - J316_SUB 230.00 230KV CKT 1	342.4	0.0372	104.1834	ROSEAU - ROSEAUM 2 500.00 500KV CKT 1
25SP	16ALL	3	TO->FROM	G17_109	ELLENDLMVP4 230.00 - J316_SUB 230.00 230KV CKT 1	342.4	0.0372	104.1834	ROSEAU - ROSEAUM 2 500.00 500KV CKT 1
25SP	16ALL	3	TO->FROM	G17_109	ELLENDLMVP4 230.00 - J316_SUB 230.00 230KV CKT 1	342.4	0.0372	104.4171	RIEL - ROSEAU 500KV CKT 1
20SP	16ALL	3	TO->FROM	G17_109	ELLENDLMVP4 230.00 - J316_SUB 230.00 230KV CKT 1	341.9	0.03711	102.3059	FORBES - ROSEAU 500KV CKT 1
20SP	16ALL	3	TO->FROM	G17_109	ELLENDLMVP4 230.00 - J316_SUB 230.00 230KV CKT 1	341.9	0.03711	102.5692	ROSEAU - ROSEAUM 2 500.00 500KV CKT 1
20SP	16ALL	3	TO->FROM	G17_109	ELLENDLMVP4 230.00 - J316_SUB 230.00 230KV CKT 1	341.9	0.03711	102.5692	ROSEAU - ROSEAUM 2 500.00 500KV CKT 1
20SP	16ALL	3	TO->FROM	G17_109	ELLENDLMVP4 230.00 - J316_SUB 230.00 230KV CKT 1	341.9	0.03711	102.8324	RIEL - ROSEAU 500KV CKT 1
17SP	16ALL	3	TO->FROM	G17_109	ELLENDLMVP4 230.00 - J316_SUB 230.00 230KV CKT 1	341.7	0.03691	106.3869	FORBES - ROSEAU 500KV CKT 1
17SP	16ALL	3	TO->FROM	G17_109	ELLENDLMVP4 230.00 - J316_SUB 230.00 230KV CKT 1	341.7	0.03691	106.6503	ROSEAU - ROSEAUM 2 500.00 500KV CKT 1
17SP	16ALL	3	TO->FROM	G17_109	ELLENDLMVP4 230.00 - J316_SUB 230.00 230KV CKT 1	341.7	0.03691	106.6503	ROSEAU - ROSEAUM 2 500.00 500KV CKT 1
17SP	16ALL	3	TO->FROM	G17_109	ELLENDLMVP4 230.00 - J316_SUB 230.00 230KV CKT 1	341.7	0.03691	106.8844	RIEL - ROSEAU 500KV CKT 1
17G	16ALL	3	TO->FROM	G17_109	ELLENDLMVP4 230.00 - J316_SUB 230.00 230KV CKT 1	341.7	0.03622	102.0919	FORBES - ROSEAU 500KV CKT 1
17G	16ALL	3	TO->FROM	G17_109	ELLENDLMVP4 230.00 - J316_SUB 230.00 230KV CKT 1	341.7	0.03622	102.2675	ROSEAU - ROSEAUM 2 500.00 500KV CKT 1
17G	16ALL	3	TO->FROM	G17_109	ELLENDLMVP4 230.00 - J316_SUB 230.00 230KV CKT 1	341.7	0.03622	102.2675	ROSEAU - ROSEAUM 2 500.00 500KV CKT 1
17G	16ALL	3	TO->FROM	G17_109	ELLENDLMVP4 230.00 - J316_SUB 230.00 230KV CKT 1	341.7	0.03622	102.4431	RIEL - ROSEAU 500KV CKT 1
25SP	16ALL	3	TO->FROM	G17_109	ELLENDLMVP4 230.00 - J316_SUB 230.00 230KV CKT 1	318.4	0.03512	101.2789	System Intact
17SP	16ALL	3	TO->FROM	G17_109	ELLENDLMVP4 230.00 - J316_SUB 230.00 230KV CKT 1	317.6	0.03479	103.4509	System Intact
25SP	00NR	3	TO->FROM	G17_109	ELLENDLMVP4 230.00 - J316_SUB 230.00 230KV CKT 1	342.7	0.03425	111.0476	ELLENDLMVP4 230.00 - MERRCRT4 230.00 230KV CKT 1
20SP	00NR	3	TO->FROM	G17_109	ELLENDLMVP4 230.00 - J316_SUB 230.00 230KV CKT 1	342.2	0.03418	110.122	ELLENDLMVP4 230.00 - MERRCRT4 230.00 230KV CKT 1
17G	16ALL	3	TO->FROM	G17_109	ELLENDLMVP4 230.00 - J316_SUB 230.00 230KV CKT 1	317.6	0.03413	100.8476	System Intact
16WP	00NR	3	TO->FROM	G17_109	ELLENDLMVP4 230.00 - J316_SUB 230.00 230KV CKT 1	340.7	0.03404	117.2565	ELLENDLMVP4 230.00 - MERRCRT4 230.00 230KV CKT 1
17SP	00NR	3	TO->FROM	G17_109	ELLENDLMVP4 230.00 - J316_SUB 230.00 230KV CKT 1	341.7	0.03402	131.8076	ELLENDLMVP4 230.00 - MERRCRT4 230.00 230KV CKT 1
17G	16NR	3	TO->FROM	G17_109	ELLENDLMVP4 230.00 - J316_SUB 230.00 230KV CKT 1	340.6	0.03048	136.0991	ELLENDLMVP4 230.00 - MERRCRT4 230.00 230KV CKT 1
25SP	16ALL	3	TO->FROM	G17_109	ELLENDLMVP4 230.00 - MERRCRT4 230.00 230KV CKT 1	382.4	0.05985	117.5126	ELLENDLMVP4 230.00 - J316_SUB 230.00 230KV CKT 1
20SP	16ALL	3	TO->FROM	G17_109	ELLENDLMVP4 230.00 - MERRCRT4 230.00 230KV CKT 1	382.5	0.05967	114.195	ELLENDLMVP4 230.00 - J316_SUB 230.00 230KV CKT 1
17SP	16ALL	3	TO->FROM	G17_109	ELLENDLMVP4 230.00 - MERRCRT4 230.00 230KV CKT 1	382.2	0.05964	120.7985	ELLENDLMVP4 230.00 - J316_SUB 230.00 230KV CKT 1

SEASON	GROUP	SCENARIO	DIRECTION	SOURCE	MONITORED ELEMENT	RATE (MVA)	TDF	CONTINGENCY LOADING %	CONTINGENCY
20WP	16ALL	3	TO->FROM	G17_109	ELLENDLMVP4 230.00 - MERRCRT4 230.00 230KV CKT 1	382.9	0.05883	103.9593	ELLENDLMVP4 230.00 - J316_SUB 230.00 230KV CKT 1
16WP	16ALL	3	TO->FROM	G17_109	ELLENDLMVP4 230.00 - MERRCRT4 230.00 230KV CKT 1	382.5	0.05881	113.1671	ELLENDLMVP4 230.00 - J316_SUB 230.00 230KV CKT 1
17G	16ALL	3	TO->FROM	G17_109	ELLENDLMVP4 230.00 - MERRCRT4 230.00 230KV CKT 1	382.5	0.0585	117.0541	ELLENDLMVP4 230.00 - J316_SUB 230.00 230KV CKT 1
17SP	00NR	3	TO->FROM	G17_109	ELLENDLMVP4 230.00 - MERRCRT4 230.00 230KV CKT 1	382.5	0.03332	111.5196	ELLENDLMVP4 230.00 - J316_SUB 230.00 230KV CKT 1
17G	16NR	3	TO->FROM	G17_109	ELLENDLMVP4 230.00 - MERRCRT4 230.00 230KV CKT 1	382.4	0.02986	114.8941	ELLENDLMVP4 230.00 - J316_SUB 230.00 230KV CKT 1
25SP	16ALL	3	FROM->TO	G17_109	ELLENDLMVP4 230.00 - OAKES 230KV CKT 1	350.4	0.03933	116.3881	BSSOUTH3 345.00 - J436&437_POI345.00 345KV CKT 1
20SP	16ALL	3	FROM->TO	G17_109	ELLENDLMVP4 230.00 - OAKES 230KV CKT 1	350	0.03916	113.4446	BSSOUTH3 345.00 - J436&437_POI345.00 345KV CKT 1
20WP	16ALL	3	FROM->TO	G17_109	ELLENDLMVP4 230.00 - OAKES 230KV CKT 1	350.8	0.03851	107.6397	BSSOUTH3 345.00 - J436&437_POI345.00 345KV CKT 1
17SP	16ALL	3	FROM->TO	G17_109	FARGO - SHEYNNE 230KV CKT 1	327	0.07787	110.3988	CENTER - JAMESTOWN 345KV CKT 1
17SP	16ALL	3	FROM->TO	G17_109	FARGO - SHEYNNE 230KV CKT 1	327	0.07773	130.5076	BUFFALO - JAMESTOWN 345KV CKT 1
20SP	16ALL	3	FROM->TO	G17_109	FARGO - SHEYNNE 230KV CKT 1	329.7	0.07769	110.8389	CENTER - JAMESTOWN 345KV CKT 1
25SP	16ALL	3	FROM->TO	G17_109	FARGO - SHEYNNE 230KV CKT 1	329.3	0.07765	113.6228	CENTER - JAMESTOWN 345KV CKT 1
20SP	16ALL	3	FROM->TO	G17_109	FARGO - SHEYNNE 230KV CKT 1	329.7	0.07755	133.7555	BUFFALO - JAMESTOWN 345KV CKT 1
25SP	16ALL	3	FROM->TO	G17_109	FARGO - SHEYNNE 230KV CKT 1	329.3	0.07751	136.8709	BUFFALO - JAMESTOWN 345KV CKT 1
20SP	16ALL	3	FROM->TO	G17_109	FARGO - SHEYNNE 230KV CKT 1	329.7	0.06519	101.946	BISON 3 345.00 - BUFFALO 345KV CKT 1
25SP	16ALL	3	FROM->TO	G17_109	FARGO - SHEYNNE 230KV CKT 1	329.3	0.06518	103.3538	BISON 3 345.00 - BUFFALO 345KV CKT 1
17SP	16ALL	3	TO->FROM	G17_109	FT RANDAL - FT THOMPSON 230KV CKT 1	319.6	0.0597	100.2628	GR ISLD-LNX3345.00 - GRAND ISLAND 345KV CKT Z
17SP	16ALL	3	TO->FROM	G17_109	FT RANDAL - FT THOMPSON 230KV CKT 1	319.6	0.0597	100.2628	GR ISLD-LNX3345.00 - HOLT.CO3 345.00 345KV CKT 1
17SP	16ALL	3	TO->FROM	G17_109	FT RANDAL - FT THOMPSON 230KV CKT 1	319.6	0.05895	100.4693	FT RANDAL - LAKE PLATT 230KV CKT 1
17SP	16ALL	3	TO->FROM	G17_109	FT RANDAL - FT THOMPSON 230KV CKT 1	319.6	0.05895	103.0663	P12:230:UMZW:# 739 #: FT IN SD. FT-LP LINE FAULT
17SP	16ALL	3	FROM->TO	G17_109	G14_001IST 115.00 - NEWELL 115KV CKT 1	88.9	0.05887	104.4904	MAURINE - NUNDRWD-LNX3230.00 230KV CKT 1
17SP	16ALL	3	FROM->TO	G17_109	G14_001IST 115.00 - NEWELL 115KV CKT 1	88.9	0.05887	104.4904	NUNDRWD - NUNDRWD-LNX3230.00 230KV CKT Z
20L	16ALL	3	FROM->TO	G17_109	G14_001IST 115.00 - NEWELL 115KV CKT 1	88.4	0.05694	109.8326	MAURINE - NUNDRWD-LNX3230.00 230KV CKT 1
20L	16ALL	3	FROM->TO	G17_109	G14_001IST 115.00 - NEWELL 115KV CKT 1	88.4	0.05694	109.8326	NUNDRWD - NUNDRWD-LNX3230.00 230KV CKT Z
17G	16ALL	3	TO->FROM	G17_109	GARRISON - STANTONTAP 7115.00 115KV CKT 1	121	0.03712	102.1025	CENTER - COYOTE 345KV CKT 1
16WP	16ALL	3	TO->FROM	G17_109	GARRISON - STANTONTAP 7115.00 115KV CKT 1	131.9	0.03668	106.423	CENTER - COYOTE 345KV CKT 1
20WP	16ALL	3	TO->FROM	G17_109	GARRISON - STANTONTAP 7115.00 115KV CKT 1	132	0.03505	106.6152	CENTER - COYOTE 345KV CKT 1
17G	16ALL	3	TO->FROM	G17_109	GERALD GENTLEMAN STATION - OGALLALA 230KV CKT 1	319.6	0.04236	115.975	GERALD GENTLEMAN STATION - KEYSTONE 345KV CKT 1
20L	16ALL	3	TO->FROM	G17_109	GLENHAM - L3 HAWDON 230KV CKT 1	209.7	0.07017	103.6109	BISON - MAURINE 230KV CKT 1
20L	16ALL	3	TO->FROM	G17_109	GLENHAM - L3 HAWDON 230KV CKT 1	209.7	0.07017	105.2322	BISON - HETINGER 230KV CKT 1
25SP	16ALL	3	TO->FROM	G17_109	GLENHAM - L3 HAWDON 230KV CKT 1	210	0.06506	100.3848	G16-017-TAP 345.00 - LELAND2-LNX3345.00 345KV CKT 1
25SP	16ALL	3	TO->FROM	G17_109	GLENHAM - L3 HAWDON 230KV CKT 1	210	0.06506	101.1943	LELAND OLDS - LELAND2-LNX3345.00 345KV CKT Z
25SP	16ALL	3	TO->FROM	G17_109	GLENHAM - L3 HAWDON 230KV CKT 1	210	0.06506	102.0991	P12:345:UMZB:# 108 #: LOS FT IN ND. LOS FT
25SP	16ALL	3	TO->FROM	G17_109	GLENHAM - L3 HAWDON 230KV CKT 1	210	0.06506	103.3371	FT THOMPSON - FTTHOM1-LNX3345.00 345KV CKT Z
25SP	16ALL	3	TO->FROM	G17_109	GLENHAM - L3 HAWDON 230KV CKT 1	210	0.06506	103.3371	FTTHOM1-LNX3345.00 - G16-017-TAP 345.00 345KV CKT 1
20L	16ALL	3	TO->FROM	G17_109	GLENHAM - L3 HAWDON 230KV CKT 1	209.7	0.06181	109.2494	G16-017-TAP 345.00 - LELAND2-LNX3345.00 345KV CKT 1
20L	16ALL	3	TO->FROM	G17_109	GLENHAM - L3 HAWDON 230KV CKT 1	209.7	0.06181	109.8693	LELAND OLDS - LELAND2-LNX3345.00 345KV CKT Z
20L	16ALL	3	TO->FROM	G17_109	GLENHAM - L3 HAWDON 230KV CKT 1	209.7	0.06181	110.8231	P12:345:UMZB:# 108 #: LOS FT IN ND. LOS FT
20L	16ALL	3	TO->FROM	G17_109	GLENHAM - L3 HAWDON 230KV CKT 1	209.7	0.06181	112.1583	FT THOMPSON - FTTHOM1-LNX3345.00 345KV CKT Z
20L	16ALL	3	TO->FROM	G17_109	GLENHAM - L3 HAWDON 230KV CKT 1	209.7	0.06181	112.1583	FTTHOM1-LNX3345.00 - G16-017-TAP 345.00 345KV CKT 1
20L	16ALL	3	TO->FROM	G17_109	GLENHAM - L3 HAWDON 230KV CKT 1	209.7	0.05655	101.5031	BROADLAND - HURON 230KV CKT 1
20L	16ALL	3	TO->FROM	G17_109	GLENHAM - L3 HAWDON 230KV CKT 1	209.7	0.05655	101.5508	BRDLAND-LNX3345.00 - HURON 345KV CKT Z
20L	16ALL	3	TO->FROM	G17_109	GLENHAM - L3 HAWDON 230KV CKT 1	209.7	0.05655	101.5508	ANTELOP-LNX3345.00 - BRDLAND-LNX3345.00 345KV CKT 1
20L	16ALL	3	TO->FROM	G17_109	GLENHAM - L3 HAWDON 230KV CKT 1	209.7	0.05655	101.5508	HURON (BD 90343-A) 345/230/13.8KV TRANSFORMER CKT 1
20L	16ALL	3	TO->FROM	G17_109	GLENHAM - L3 HAWDON 230KV CKT 1	209.7	0.05655	101.5508	P13:345:UMZB:# 244 #: BD IN SD. LOSS OF TX
20L	16ALL	3	TO->FROM	G17_109	GLENHAM - L3 HAWDON 230KV CKT 1	209.7	0.05655	101.7415	P12:345:UMZB:# 102 #: AVS BD IN ND. AVS BRD LR
20L	16ALL	3	TO->FROM	G17_109	GLENHAM - L3 HAWDON 230KV CKT 1	209.7	0.05655	101.7415	P12:345:UMZB:# 103 #: BD IN SD. LOSS OF LINE
20L	16ALL	3	TO->FROM	G17_109	GLENHAM - L3 HAWDON 230KV CKT 1	209.7	0.05655	101.7892	ANTELOP-LNX3345.00 - ANTELOPE VALLEY 345KV CKT Z
25SP	16ALL	3	TO->FROM	G17_109	GLENHAM - L3 HAWDON 230KV CKT 1	210	0.05191	100.0152	RIEL - ROSEAU 500KV CKT 1
20L	16ALL	3	TO->FROM	G17_109	GLENHAM - L3 HAWDON 230KV CKT 1	209.7	0.04954	103.4182	FORBES - ROSEAU 500KV CKT 1
20L	16ALL	3	TO->FROM	G17_109	GLENHAM - L3 HAWDON 230KV CKT 1	209.7	0.04954	103.7043	ROSEAU - ROSEAUM 2 500.00 500KV CKT 1
20L	16ALL	3	TO->FROM	G17_109	GLENHAM - L3 HAWDON 230KV CKT 1	209.7	0.04954	103.7043	ROSEAU - ROSEAUM 2 500.00 500KV CKT 1
20L	16ALL	3	TO->FROM	G17_109	GLENHAM - L3 HAWDON 230KV CKT 1	209.7	0.04954	103.9905	RIEL - ROSEAU 500KV CKT 1
25SP	16ALL	3	FROM->TO	G17_109	GRANITE FALLS - MN VALLEY TAP 230KV CKT 1	257.6	0.0509	103.6491	GRANITE FALLS - MN VALLEY TAP 230KV CKT 1
20SP	16ALL	3	FROM->TO	G17_109	GRANITE FALLS - MN VALLEY TAP 230KV CKT 1	258.8	0.05056	102.8841	GRANITE FALLS - MN VALLEY TAP 230KV CKT 1

SEASON	GROUP	SCENARIO	DIRECTION	SOURCE	MONITORED ELEMENT	RATE (MVA)	TDF	CONTINGENCY LOADING %	CONTINGENCY
20L	16ALL	3	FROM->TO	G17_109	GRANITE FALLS - MN VALLEY TAP 230KV CKT 1	257.8	0.04646	103.2677	GRANITE FALLS - MN VALLEY TAP 230KV CKT 1
25SP	16ALL	3	FROM->TO	G17_109	HESKETT - WISHEK 230KV CKT 1	256.4	0.07411	101.3853	BUFFALO - JAMESTOWN 345KV CKT 1
17SP	16ALL	3	FROM->TO	G17_109	HESKETT - WISHEK 230KV CKT 1	256.6	0.07386	105.0896	BUFFALO - JAMESTOWN 345KV CKT 1
17SP	16ALL	3	FROM->TO	G17_109	HESKETT - WISHEK 230KV CKT 1	256.6	0.06863	104.1746	FORBES - ROSEAU 500KV CKT 1
17SP	16ALL	3	FROM->TO	G17_109	HESKETT - WISHEK 230KV CKT 1	256.6	0.06863	104.7981	ROSEAU - ROSEAUM 2 500.00 500KV CKT 1
17SP	16ALL	3	FROM->TO	G17_109	HESKETT - WISHEK 230KV CKT 1	256.6	0.06863	104.7981	ROSEAU - ROSEAUM 2 500.00 500KV CKT 1
17SP	16ALL	3	FROM->TO	G17_109	HESKETT - WISHEK 230KV CKT 1	256.6	0.06863	105.4606	RIEL - ROSEAU 500KV CKT 1
25SP	16ALL	3	FROM->TO	G17_109	HESKETT (HESKETT TR1) 230/115/13.8KV TRANSFORMER CKT 1	124.3	0.04696	114.6356	HESKETT - MANDAN 4 230.00 230KV CKT 1
25SP	16ALL	3	FROM->TO	G17_109	HESKETT (HESKETT TR1) 230/115/13.8KV TRANSFORMER CKT 1	124.2	0.04696	114.7279	HESKETT - MANDAN 4 230.00 230KV CKT 1
20SP	16ALL	3	FROM->TO	G17_109	HESKETT (HESKETT TR1) 230/115/13.8KV TRANSFORMER CKT 1	124.4	0.04681	104.4469	HESKETT - MANDAN 4 230.00 230KV CKT 1
20SP	16ALL	3	FROM->TO	G17_109	HESKETT (HESKETT TR1) 230/115/13.8KV TRANSFORMER CKT 1	124.3	0.04681	104.531	HESKETT - MANDAN 4 230.00 230KV CKT 1
17SP	16ALL	3	FROM->TO	G17_109	HESKETT (HESKETT TR1) 230/115/13.8KV TRANSFORMER CKT 1	124.7	0.04676	118.2999	HESKETT - MANDAN 4 230.00 230KV CKT 1
17SP	16ALL	3	FROM->TO	G17_109	HESKETT (HESKETT TR1) 230/115/13.8KV TRANSFORMER CKT 1	124.6	0.04676	118.3949	HESKETT - MANDAN 4 230.00 230KV CKT 1
16WP	16ALL	3	FROM->TO	G17_109	HESKETT (HESKETT TR1) 230/115/13.8KV TRANSFORMER CKT 1	124.8	0.04607	102.1218	HESKETT - MANDAN 4 230.00 230KV CKT 1
16WP	16ALL	3	FROM->TO	G17_109	HESKETT (HESKETT TR1) 230/115/13.8KV TRANSFORMER CKT 1	124.8	0.04607	102.1218	HESKETT - MANDAN 4 230.00 230KV CKT 1
17G	16ALL	3	FROM->TO	G17_109	HESKETT (HESKETT TR1) 230/115/13.8KV TRANSFORMER CKT 1	124.7	0.04583	105.4082	HESKETT - MANDAN 4 230.00 230KV CKT 1
17G	16ALL	3	FROM->TO	G17_109	HESKETT (HESKETT TR1) 230/115/13.8KV TRANSFORMER CKT 1	124.7	0.04583	105.4082	HESKETT - MANDAN 4 230.00 230KV CKT 1
25SP	16ALL	3	TO->FROM	G17_109	KARLSTAD - WINGER 230KV CKT 1	286.4	0.0413	100.669	ROSEAU - ROSEAUM 2 500.00 500KV CKT 1
25SP	16ALL	3	TO->FROM	G17_109	KARLSTAD - WINGER 230KV CKT 1	286.4	0.0413	100.669	ROSEAU - ROSEAUM 2 500.00 500KV CKT 1
25SP	16ALL	3	TO->FROM	G17_109	KARLSTAD - WINGER 230KV CKT 1	286.4	0.0413	101.9958	RIEL - ROSEAU 500KV CKT 1
17SP	16ALL	3	TO->FROM	G17_109	KARLSTAD - WINGER 230KV CKT 1	286.4	0.04095	101.7444	FORBES - ROSEAU 500KV CKT 1
17SP	16ALL	3	TO->FROM	G17_109	KARLSTAD - WINGER 230KV CKT 1	286.4	0.04095	103.1411	ROSEAU - ROSEAUM 2 500.00 500KV CKT 1
17SP	16ALL	3	TO->FROM	G17_109	KARLSTAD - WINGER 230KV CKT 1	286.4	0.04095	103.1411	ROSEAU - ROSEAUM 2 500.00 500KV CKT 1
17SP	16ALL	3	TO->FROM	G17_109	KARLSTAD - WINGER 230KV CKT 1	286.4	0.04095	104.5028	RIEL - ROSEAU 500KV CKT 1
20SP	16ALL	3	TO->FROM	G17_109	KARLSTAD - WINGER 230KV CKT 1	286	0.04023	105.407	FORBES - ROSEAU 500KV CKT 1
20SP	16ALL	3	TO->FROM	G17_109	KARLSTAD - WINGER 230KV CKT 1	286	0.04023	106.8056	ROSEAU - ROSEAUM 2 500.00 500KV CKT 1
20SP	16ALL	3	TO->FROM	G17_109	KARLSTAD - WINGER 230KV CKT 1	286	0.04023	106.8056	ROSEAU - ROSEAUM 2 500.00 500KV CKT 1
20SP	16ALL	3	TO->FROM	G17_109	KARLSTAD - WINGER 230KV CKT 1	286	0.04023	108.1343	RIEL - ROSEAU 500KV CKT 1
20SP	16ALL	3	FROM->TO	G17_109	LEWIS & CLARK - RICHLAND 115KV CKT 1	100.9	0.26684	105.6967	BELFIELD - MEDORA 230KV CKT 1
20SP	16ALL	3	FROM->TO	G17_109	LEWIS & CLARK - RICHLAND 115KV CKT 1	100.9	0.26684	109.4628	BEAVERHILL4 230.00 - MEDORA 230KV CKT 1
17SP	16ALL	3	FROM->TO	G17_109	LEWIS & CLARK - RICHLAND 115KV CKT 1	101	0.26651	111.4218	BEAVERHILL4 230.00 - DAWSON CREEK 230KV CKT 1
17SP	16ALL	3	FROM->TO	G17_109	LEWIS & CLARK - RICHLAND 115KV CKT 1	101	0.26651	130.1347	BELFIELD - MEDORA 230KV CKT 1
17SP	16ALL	3	FROM->TO	G17_109	LEWIS & CLARK - RICHLAND 115KV CKT 1	101	0.26651	133.897	BEAVERHILL4 230.00 - MEDORA 230KV CKT 1
16WP	16ALL	3	FROM->TO	G17_109	LEWIS & CLARK - RICHLAND 115KV CKT 1	124	0.26625	110.2677	BELFIELD - MEDORA 230KV CKT 1
16WP	16ALL	3	FROM->TO	G17_109	LEWIS & CLARK - RICHLAND 115KV CKT 1	124	0.26625	113.8161	BEAVERHILL4 230.00 - MEDORA 230KV CKT 1
17G	16ALL	3	FROM->TO	G17_109	LEWIS & CLARK - RICHLAND 115KV CKT 1	100.9	0.26604	106.5847	BELFIELD - MEDORA 230KV CKT 1
17G	16ALL	3	FROM->TO	G17_109	LEWIS & CLARK - RICHLAND 115KV CKT 1	100.9	0.26604	110.2517	BEAVERHILL4 230.00 - MEDORA 230KV CKT 1
17SP	00NR	3	FROM->TO	G17_109	LEWIS & CLARK - RICHLAND 115KV CKT 1	101	0.2654	102.3049	BELFIELD - MEDORA 230KV CKT 1
17SP	00NR	3	FROM->TO	G17_109	LEWIS & CLARK - RICHLAND 115KV CKT 1	101	0.2654	104.2851	BEAVERHILL4 230.00 - DAWSON CREEK 230KV CKT 1
17SP	00NR	3	FROM->TO	G17_109	LEWIS & CLARK - RICHLAND 115KV CKT 1	101	0.2654	106.0673	BEAVERHILL4 230.00 - MEDORA 230KV CKT 1
17SP	16ALL	3	FROM->TO	G17_109	LEWIS & CLARK - RICHLAND 115KV CKT 1	101	0.19447	103.0139	BELFIELD - CHARLIE CREEK 345KV CKT 1
17SP	00NR	3	FROM->TO	G17_109	LEWIS & CLARK - RICHLAND 115KV CKT 1	101	0.17157	101.2895	CULBERTSN E7115.00 - WILISTON 115KV CKT 1
20SP	16ALL	3	FROM->TO	G17_109	LEWIS & CLARK - RICHLAND 115KV CKT 1	100.9	0.17142	100.2379	CULBERTSN E7115.00 - WILISTON 115KV CKT 1
17SP	16ALL	3	FROM->TO	G17_109	LEWIS & CLARK - RICHLAND 115KV CKT 1	101	0.17113	101.1287	CULBERTSON - POPLAR 115KV CKT 1
17SP	16ALL	3	FROM->TO	G17_109	LEWIS & CLARK - RICHLAND 115KV CKT 1	101	0.17113	104.495	POPLAR - WOLF POINT 115KV CKT 1
17SP	16ALL	3	FROM->TO	G17_109	LEWIS & CLARK - RICHLAND 115KV CKT 1	101	0.17108	119.9208	CULBERTSN E7115.00 - WILISTON 115KV CKT 1
16WP	16ALL	3	FROM->TO	G17_109	LEWIS & CLARK - RICHLAND 115KV CKT 1	124	0.17086	104.5419	CULBERTSN E7115.00 - WILISTON 115KV CKT 1
17G	16ALL	3	FROM->TO	G17_109	LEWIS & CLARK - RICHLAND 115KV CKT 1	100.9	0.17058	101.3082	CULBERTSN E7115.00 - WILISTON 115KV CKT 1
17SP	16ALL	3	FROM->TO	G17_109	LEWIS & CLARK - RICHLAND 115KV CKT 1	101	0.15267	102.4119	BISON - MAURINE 230KV CKT 1
17SP	16ALL	3	FROM->TO	G17_109	LEWIS & CLARK - RICHLAND 115KV CKT 1	101	0.15267	103.303	BISON - HETINGER 230KV CKT 1
17SP	16ALL	3	FROM->TO	G17_109	LEWIS & CLARK - RICHLAND 115KV CKT 1	101	0.15022	102.0396	BELFIELD - DAGLUM 4230.00 230KV CKT 1
17SP	16ALL	3	FROM->TO	G17_109	LEWIS & CLARK - RICHLAND 115KV CKT 1	101	0.13667	105.1683	CHARLIE CREEK (CCR KV2A) 345/115/13.8KV TRANSFORMER CKT 1
25SP	16ALL	3	FROM->TO	G17_109	MAPLE RIVER TAP NORTH - SHEYNNE 115KV CKT 1	158	0.03045	141.3089	BISON 3 345.00 - BUFFALO 345KV CKT 1
17SP	16ALL	3	FROM->TO	G17_109	MAPLE RIVER TAP NORTH - SHEYNNE 115KV CKT 1	159.9	0.03039	130.7317	BISON 3 345.00 - BUFFALO 345KV CKT 1
20SP	16ALL	3	FROM->TO	G17_109	MAPLE RIVER TAP NORTH - SHEYNNE 115KV CKT 1	158.2	0.03039	133.9671	BISON 3 345.00 - BUFFALO 345KV CKT 1

SEASON	GROUP	SCENARIO	DIRECTION	SOURCE	MONITORED ELEMENT	RATE (MVA)	TDF	CONTINGENCY LOADING %	CONTINGENCY
17G	16ALL	3	FROM->TO	G17_109	MAPLE RIVER TAP NORTH - SHEYNNE 115KV CKT 1	160.3	0.03005	121.5221	BISON 3 345.00 - BUFFALO 345KV CKT 1
16WP	16ALL	3	FROM->TO	G17_109	MAPLE RIVER TAP NORTH - SHEYNNE 115KV CKT 1	155.7	0.02992	126.6256	BISON 3 345.00 - BUFFALO 345KV CKT 1
20WP	16ALL	3	FROM->TO	G17_109	MAPLE RIVER TAP NORTH - SHEYNNE 115KV CKT 1	155.6	0.02984	126.2339	BISON 3 345.00 - BUFFALO 345KV CKT 1
25SP	16ALL	3	FROM->TO	G17_109	MAURINE (MA KV1A) 230/115/13.8KV TRANSFORMER CKT 1	123	0.09676	103.9122	MAURINE - NUNDRWD-LNX3230.00 230KV CKT 1
25SP	16ALL	3	FROM->TO	G17_109	MAURINE (MA KV1A) 230/115/13.8KV TRANSFORMER CKT 1	123	0.09676	103.9122	NUNDRWD - NUNDRWD-LNX3230.00 230KV CKT Z
25SP	16ALL	3	FROM->TO	G17_109	MAURINE (MA KV1A) 230/115/13.8KV TRANSFORMER CKT 1	122.5	0.09676	104.3363	MAURINE - NUNDRWD-LNX3230.00 230KV CKT 1
25SP	16ALL	3	FROM->TO	G17_109	MAURINE (MA KV1A) 230/115/13.8KV TRANSFORMER CKT 1	122.5	0.09676	104.3363	NUNDRWD - NUNDRWD-LNX3230.00 230KV CKT Z
17SP	16ALL	3	FROM->TO	G17_109	MAURINE (MA KV1A) 230/115/13.8KV TRANSFORMER CKT 1	123.7	0.09669	107.0978	MAURINE - NUNDRWD-LNX3230.00 230KV CKT 1
17SP	16ALL	3	FROM->TO	G17_109	MAURINE (MA KV1A) 230/115/13.8KV TRANSFORMER CKT 1	123.7	0.09669	107.0978	NUNDRWD - NUNDRWD-LNX3230.00 230KV CKT Z
17SP	16ALL	3	FROM->TO	G17_109	MAURINE (MA KV1A) 230/115/13.8KV TRANSFORMER CKT 1	123.5	0.09669	107.2713	MAURINE - NUNDRWD-LNX3230.00 230KV CKT 1
17SP	16ALL	3	FROM->TO	G17_109	MAURINE (MA KV1A) 230/115/13.8KV TRANSFORMER CKT 1	123.5	0.09669	107.2713	NUNDRWD - NUNDRWD-LNX3230.00 230KV CKT Z
20SP	16ALL	3	FROM->TO	G17_109	MAURINE (MA KV1A) 230/115/13.8KV TRANSFORMER CKT 1	122.8	0.09603	100.2248	MAURINE - NUNDRWD-LNX3230.00 230KV CKT 1
20SP	16ALL	3	FROM->TO	G17_109	MAURINE (MA KV1A) 230/115/13.8KV TRANSFORMER CKT 1	122.8	0.09603	100.2248	NUNDRWD - NUNDRWD-LNX3230.00 230KV CKT Z
20L	16ALL	3	FROM->TO	G17_109	MAURINE (MA KV1A) 230/115/13.8KV TRANSFORMER CKT 1	124.9	0.09496	113.0088	MAURINE - NUNDRWD-LNX3230.00 230KV CKT 1
20L	16ALL	3	FROM->TO	G17_109	MAURINE (MA KV1A) 230/115/13.8KV TRANSFORMER CKT 1	124.9	0.09496	113.0088	NUNDRWD - NUNDRWD-LNX3230.00 230KV CKT Z
20L	16ALL	3	FROM->TO	G17_109	MAURINE (MA KV1A) 230/115/13.8KV TRANSFORMER CKT 1	124.8	0.09496	113.0994	MAURINE - NUNDRWD-LNX3230.00 230KV CKT 1
20L	16ALL	3	FROM->TO	G17_109	MAURINE (MA KV1A) 230/115/13.8KV TRANSFORMER CKT 1	124.8	0.09496	113.0994	NUNDRWD - NUNDRWD-LNX3230.00 230KV CKT Z
17SP	16ALL	3	TO->FROM	G17_109	MERRCRT4 230.00 - WISHEK 230KV CKT 1	254.4	0.07386	100.4953	BUFFALO - JAMESTOWN 345KV CKT 1
17SP	16ALL	3	TO->FROM	G17_109	MERRCRT4 230.00 - WISHEK 230KV CKT 1	254.4	0.06863	100.2013	ROSEAU - ROSEAUM 2 500.00 500KV CKT 1
17SP	16ALL	3	TO->FROM	G17_109	MERRCRT4 230.00 - WISHEK 230KV CKT 1	254.4	0.06863	100.2013	ROSEAU - ROSEAUM 2 500.00 500KV CKT 1
17SP	16ALL	3	TO->FROM	G17_109	MERRCRT4 230.00 - WISHEK 230KV CKT 1	254.4	0.06863	100.8695	RIEL - ROSEAU 500KV CKT 1
17SP	16ALL	3	TO->FROM	G17_109	OGALLALA - SIDNEY 230KV CKT 1	319.6	0.04568	131.3217	SIDNEY - SIDNEY1-LNX3345.00 345KV CKT Z
17SP	16ALL	3	TO->FROM	G17_109	OGALLALA - SIDNEY 230KV CKT 1	319.6	0.04568	131.3217	KEYSTONE - SIDNEY1-LNX3345.00 345KV CKT 1
25SP	16ALL	3	TO->FROM	G17_109	OGALLALA - SIDNEY 230KV CKT 1	319.9	0.04355	127.6574	KEYSTONE - SIDNEY1-LNX3345.00 345KV CKT 1
25SP	16ALL	3	TO->FROM	G17_109	OGALLALA - SIDNEY 230KV CKT 1	319.9	0.04355	127.6574	SIDNEY - SIDNEY1-LNX3345.00 345KV CKT Z
20SP	16ALL	3	TO->FROM	G17_109	OGALLALA - SIDNEY 230KV CKT 1	319.9	0.04324	126.7696	SIDNEY - SIDNEY1-LNX3345.00 345KV CKT Z
20SP	16ALL	3	TO->FROM	G17_109	OGALLALA - SIDNEY 230KV CKT 1	319.9	0.04324	126.7696	KEYSTONE - SIDNEY1-LNX3345.00 345KV CKT 1
16WP	16ALL	3	TO->FROM	G17_109	OGALLALA - SIDNEY 230KV CKT 1	319.5	0.04194	123.1174	KEYSTONE - SIDNEY1-LNX3345.00 345KV CKT 1
16WP	16ALL	3	TO->FROM	G17_109	OGALLALA - SIDNEY 230KV CKT 1	319.5	0.04194	123.1174	SIDNEY - SIDNEY1-LNX3345.00 345KV CKT Z
17G	16ALL	3	TO->FROM	G17_109	OGALLALA - SIDNEY 230KV CKT 1	319.5	0.04064	135.9174	SIDNEY - SIDNEY1-LNX3345.00 345KV CKT Z
17G	16ALL	3	TO->FROM	G17_109	OGALLALA - SIDNEY 230KV CKT 1	319.5	0.04064	135.9174	KEYSTONE - SIDNEY1-LNX3345.00 345KV CKT 1
20WP	16ALL	3	TO->FROM	G17_109	OGALLALA - SIDNEY 230KV CKT 1	319.7	0.04064	115.3256	SIDNEY - SIDNEY1-LNX3345.00 345KV CKT Z
20WP	16ALL	3	TO->FROM	G17_109	OGALLALA - SIDNEY 230KV CKT 1	319.7	0.04064	115.3256	KEYSTONE - SIDNEY1-LNX3345.00 345KV CKT 1
17SP	16ALL	3	FROM->TO	G17_109	PRAIRIE - WINGER 230KV CKT 1	399.8	0.04633	107.4287	FORBES - ROSEAU 500KV CKT 1
17SP	16ALL	3	FROM->TO	G17_109	PRAIRIE - WINGER 230KV CKT 1	399.8	0.04633	108.8794	ROSEAU - ROSEAUM 2 500.00 500KV CKT 1
17SP	16ALL	3	FROM->TO	G17_109	PRAIRIE - WINGER 230KV CKT 1	399.8	0.04633	108.8794	ROSEAU - ROSEAUM 2 500.00 500KV CKT 1
17SP	16ALL	3	FROM->TO	G17_109	PRAIRIE - WINGER 230KV CKT 1	399.8	0.04633	110.3302	RIEL - ROSEAU 500KV CKT 1
20SP	16ALL	3	FROM->TO	G17_109	PRAIRIE - WINGER 230KV CKT 1	399.9	0.04609	107.757	FORBES - ROSEAU 500KV CKT 1
20SP	16ALL	3	FROM->TO	G17_109	PRAIRIE - WINGER 230KV CKT 1	399.9	0.04609	109.2323	ROSEAU - ROSEAUM 2 500.00 500KV CKT 1
20SP	16ALL	3	FROM->TO	G17_109	PRAIRIE - WINGER 230KV CKT 1	399.9	0.04609	109.2323	ROSEAU - ROSEAUM 2 500.00 500KV CKT 1
20SP	16ALL	3	FROM->TO	G17_109	PRAIRIE - WINGER 230KV CKT 1	399.9	0.04609	110.6827	RIEL - ROSEAU 500KV CKT 1
25SP	16ALL	3	FROM->TO	G17_109	PRAIRIE - WINGER 230KV CKT 1	399.9	0.04415	103.3338	FORBES - ROSEAU 500KV CKT 1
25SP	16ALL	3	FROM->TO	G17_109	PRAIRIE - WINGER 230KV CKT 1	399.9	0.04415	104.5591	ROSEAU - ROSEAUM 2 500.00 500KV CKT 1
25SP	16ALL	3	FROM->TO	G17_109	PRAIRIE - WINGER 230KV CKT 1	399.9	0.04415	104.5591	ROSEAU - ROSEAUM 2 500.00 500KV CKT 1
25SP	16ALL	3	FROM->TO	G17_109	PRAIRIE - WINGER 230KV CKT 1	399.9	0.04415	105.7845	RIEL - ROSEAU 500KV CKT 1
25SP	16ALL	4	TO->FROM	G17_109	AUDUBON - SHEYNNE 230KV CKT 1	278.7	0.03438	100.554	ROSEAU - ROSEAUM 2 500.00 500KV CKT 1
25SP	16ALL	4	TO->FROM	G17_109	AUDUBON - SHEYNNE 230KV CKT 1	278.7	0.03438	100.554	ROSEAU - ROSEAUM 2 500.00 500KV CKT 1
25SP	16ALL	4	TO->FROM	G17_109	AUDUBON - SHEYNNE 230KV CKT 1	278.7	0.03438	101.1281	RIEL - ROSEAU 500KV CKT 1
20SP	16ALL	4	TO->FROM	G17_109	AUDUBON - SHEYNNE 230KV CKT 1	278.6	0.03412	100.1967	RIEL - ROSEAU 500KV CKT 1
20L	16NR	4	TO->FROM	G17_109	BEULAH - COYOTE 115KV CKT 1	102	0.04296	182.3012	CENTER - COYOTE 345KV CKT 1
17G	16NR	4	TO->FROM	G17_109	BEULAH - COYOTE 115KV CKT 1	101.9	0.04197	311.5117	CENTER - COYOTE 345KV CKT 1
20L	16ALL	4	TO->FROM	G17_109	BEULAH - COYOTE 115KV CKT 1	102	0.04154	181.8392	CENTER - COYOTE 345KV CKT 1
20L	13ALL	4	TO->FROM	G17_109	BEULAH - COYOTE 115KV CKT 1	101.9	0.04136	148.9534	CENTER - COYOTE 345KV CKT 1
16WP	00NR	4	TO->FROM	G17_109	BEULAH - COYOTE 115KV CKT 1	122.9	0.04095	268.7583	CENTER - COYOTE 345KV CKT 1
17SP	00NR	4	TO->FROM	G17_109	BEULAH - COYOTE 115KV CKT 1	101.9	0.04093	275.3656	CENTER - COYOTE 345KV CKT 1

SEASON	GROUP	SCENARIO	DIRECTION	SOURCE	MONITORED ELEMENT	RATE (MVA)	TDF	CONTINGENCY LOADING %	CONTINGENCY
20SP	00NR	4	TO->FROM	G17_109	BEULAH - COYOTE 115KV CKT 1	101.9	0.04087	228.4381	CENTER - COYOTE 345KV CKT 1
25SP	00NR	4	TO->FROM	G17_109	BEULAH - COYOTE 115KV CKT 1	101.9	0.04085	243.4465	CENTER - COYOTE 345KV CKT 1
17G	16ALL	4	TO->FROM	G17_109	BEULAH - COYOTE 115KV CKT 1	102	0.04069	310.5412	CENTER - COYOTE 345KV CKT 1
17G	13ALL	4	TO->FROM	G17_109	BEULAH - COYOTE 115KV CKT 1	102	0.04064	275.0278	CENTER - COYOTE 345KV CKT 1
20WP	16ALL	4	TO->FROM	G17_109	BEULAH - COYOTE 115KV CKT 1	122.8	0.04062	267.8371	CENTER - COYOTE 345KV CKT 1
20WP	00NR	4	TO->FROM	G17_109	BEULAH - COYOTE 115KV CKT 1	122.9	0.0406	258.0895	CENTER - COYOTE 345KV CKT 1
20WP	13ALL	4	TO->FROM	G17_109	BEULAH - COYOTE 115KV CKT 1	122.7	0.0406	241.753	CENTER - COYOTE 345KV CKT 1
20SP	16ALL	4	TO->FROM	G17_109	BEULAH - COYOTE 115KV CKT 1	102	0.04059	238.4235	CENTER - COYOTE 345KV CKT 1
20SP	13ALL	4	TO->FROM	G17_109	BEULAH - COYOTE 115KV CKT 1	102	0.04057	205.7029	CENTER - COYOTE 345KV CKT 1
25SP	16ALL	4	TO->FROM	G17_109	BEULAH - COYOTE 115KV CKT 1	102	0.04054	254.5882	CENTER - COYOTE 345KV CKT 1
25SP	13ALL	4	TO->FROM	G17_109	BEULAH - COYOTE 115KV CKT 1	102	0.04053	222.0709	CENTER - COYOTE 345KV CKT 1
16WP	16ALL	4	TO->FROM	G17_109	BEULAH - COYOTE 115KV CKT 1	122.9	0.0405	275.6517	CENTER - COYOTE 345KV CKT 1
16WP	13ALL	4	TO->FROM	G17_109	BEULAH - COYOTE 115KV CKT 1	122.9	0.04047	247.7288	CENTER - COYOTE 345KV CKT 1
17SP	16ALL	4	TO->FROM	G17_109	BEULAH - COYOTE 115KV CKT 1	101.9	0.04042	281.9863	CENTER - COYOTE 345KV CKT 1
17SP	13ALL	4	TO->FROM	G17_109	BEULAH - COYOTE 115KV CKT 1	102	0.04039	248.6532	CENTER - COYOTE 345KV CKT 1
17G	16ALL	4	FROM->TO	G17_109	BEULAH - STANTONTAP 7115.00 115KV CKT 1	121	0.03731	102.3207	CENTER - COYOTE 345KV CKT 1
16WP	16ALL	4	FROM->TO	G17_109	BEULAH - STANTONTAP 7115.00 115KV CKT 1	131.9	0.03687	106.5474	CENTER - COYOTE 345KV CKT 1
20WP	16ALL	4	FROM->TO	G17_109	BEULAH - STANTONTAP 7115.00 115KV CKT 1	132	0.03523	106.6576	CENTER - COYOTE 345KV CKT 1
25SP	16ALL	4	TO->FROM	G17_109	BUFFALO - JAMESTOWN 345KV CKT 1	704.9	0.10689	118.5791	CNTSHNT3 345.00 - PRAIRIE3 345.00 345KV CKT 1
25SP	16ALL	4	TO->FROM	G17_109	BUFFALO - JAMESTOWN 345KV CKT 1	704.9	0.10689	118.5791	CENTER - CNTSHNT3 345.00 345KV CKT Z1
17SP	16ALL	4	TO->FROM	G17_109	BUFFALO - JAMESTOWN 345KV CKT 1	704.4	0.10653	110.8075	CNTSHNT3 345.00 - PRAIRIE3 345.00 345KV CKT 1
17SP	16ALL	4	TO->FROM	G17_109	BUFFALO - JAMESTOWN 345KV CKT 1	704.4	0.10653	110.8075	CENTER - CNTSHNT3 345.00 345KV CKT Z1
20SP	16ALL	4	TO->FROM	G17_109	BUFFALO - JAMESTOWN 345KV CKT 1	704.8	0.10651	112.2599	CNTSHNT3 345.00 - PRAIRIE3 345.00 345KV CKT 1
20SP	16ALL	4	TO->FROM	G17_109	BUFFALO - JAMESTOWN 345KV CKT 1	704.8	0.10651	112.2599	CENTER - CNTSHNT3 345.00 345KV CKT Z1
17G	16ALL	4	TO->FROM	G17_109	BUFFALO - JAMESTOWN 345KV CKT 1	704.9	0.10536	105.0719	CNTSHNT3 345.00 - PRAIRIE3 345.00 345KV CKT 1
17G	16ALL	4	TO->FROM	G17_109	BUFFALO - JAMESTOWN 345KV CKT 1	704.9	0.10536	105.0719	CENTER - CNTSHNT3 345.00 345KV CKT Z1
16WP	16ALL	4	TO->FROM	G17_109	BUFFALO - JAMESTOWN 345KV CKT 1	716.7	0.10486	106.2191	CNTSHNT3 345.00 - PRAIRIE3 345.00 345KV CKT 1
16WP	16ALL	4	TO->FROM	G17_109	BUFFALO - JAMESTOWN 345KV CKT 1	716.7	0.10486	106.2191	CENTER - CNTSHNT3 345.00 345KV CKT Z1
20WP	16ALL	4	TO->FROM	G17_109	BUFFALO - JAMESTOWN 345KV CKT 1	716.8	0.10469	105.606	CNTSHNT3 345.00 - PRAIRIE3 345.00 345KV CKT 1
20WP	16ALL	4	TO->FROM	G17_109	BUFFALO - JAMESTOWN 345KV CKT 1	716.8	0.10469	105.606	CENTER - CNTSHNT3 345.00 345KV CKT Z1
25SP	16ALL	4	TO->FROM	G17_109	BUFFALO - JAMESTOWN 345KV CKT 1	704.9	0.10465	109.628	GROTON - GROTON-LNX3 345.00 345KV CKT Z
25SP	16ALL	4	TO->FROM	G17_109	BUFFALO - JAMESTOWN 345KV CKT 1	704.9	0.10465	109.628	GROTON-LNX3 345.00 - LELAND1-LNX3345.00 345KV CKT 1
25SP	16ALL	4	TO->FROM	G17_109	BUFFALO - JAMESTOWN 345KV CKT 1	704.9	0.10465	109.8408	LELAND OLDS - LELAND1-LNX3345.00 345KV CKT Z
25SP	16ALL	4	TO->FROM	G17_109	BUFFALO - JAMESTOWN 345KV CKT 1	704.9	0.10465	109.855	P12:345:UMZB:# 109 #: LOS GRT IN ND. LOS GRT
25SP	16ALL	4	TO->FROM	G17_109	BUFFALO - JAMESTOWN 345KV CKT 1	704.9	0.1044	108.8818	P13:345:UMZB:# 244 #: BD IN SD. LOSS OF TX
25SP	16ALL	4	TO->FROM	G17_109	BUFFALO - JAMESTOWN 345KV CKT 1	704.9	0.1044	108.8818	HURON (BD 90343-A) 345/230/13.8KV TRANSFORMER CKT 1
25SP	16ALL	4	TO->FROM	G17_109	BUFFALO - JAMESTOWN 345KV CKT 1	704.9	0.1044	108.8818	BRDLAND-LNX3345.00 - HURON 345KV CKT Z
25SP	16ALL	4	TO->FROM	G17_109	BUFFALO - JAMESTOWN 345KV CKT 1	704.9	0.1044	108.9953	ANTELOP-LNX3345.00 - ANTELOPE VALLEY 345KV CKT Z
25SP	16ALL	4	TO->FROM	G17_109	BUFFALO - JAMESTOWN 345KV CKT 1	704.9	0.1044	109.0379	P12:345:UMZB:# 103 #: BD IN SD. LOSS OF LINE
25SP	16ALL	4	TO->FROM	G17_109	BUFFALO - JAMESTOWN 345KV CKT 1	704.9	0.1044	109.0379	P12:345:UMZB:# 102 #: AVS BD IN ND. AVS BRD LR
20SP	16ALL	4	TO->FROM	G17_109	BUFFALO - JAMESTOWN 345KV CKT 1	704.8	0.10436	104.3184	GROTON-LNX3 345.00 - LELAND1-LNX3345.00 345KV CKT 1
20SP	16ALL	4	TO->FROM	G17_109	BUFFALO - JAMESTOWN 345KV CKT 1	704.8	0.10436	104.3184	GROTON - GROTON-LNX3 345.00 345KV CKT Z
20SP	16ALL	4	TO->FROM	G17_109	BUFFALO - JAMESTOWN 345KV CKT 1	704.8	0.10436	104.517	LELAND OLDS - LELAND1-LNX3345.00 345KV CKT Z
20SP	16ALL	4	TO->FROM	G17_109	BUFFALO - JAMESTOWN 345KV CKT 1	704.8	0.10436	104.5454	P12:345:UMZB:# 109 #: LOS GRT IN ND. LOS GRT
17SP	16ALL	4	TO->FROM	G17_109	BUFFALO - JAMESTOWN 345KV CKT 1	704.4	0.10435	103.4566	GROTON-LNX3 345.00 - LELAND1-LNX3345.00 345KV CKT 1
17SP	16ALL	4	TO->FROM	G17_109	BUFFALO - JAMESTOWN 345KV CKT 1	704.4	0.10435	103.4566	GROTON - GROTON-LNX3 345.00 345KV CKT Z
17SP	16ALL	4	TO->FROM	G17_109	BUFFALO - JAMESTOWN 345KV CKT 1	704.4	0.10435	103.6979	LELAND OLDS - LELAND1-LNX3345.00 345KV CKT Z
17SP	16ALL	4	TO->FROM	G17_109	BUFFALO - JAMESTOWN 345KV CKT 1	704.4	0.10435	103.7121	P12:345:UMZB:# 109 #: LOS GRT IN ND. LOS GRT
25SP	16ALL	4	TO->FROM	G17_109	BUFFALO - JAMESTOWN 345KV CKT 1	704.9	0.10419	109.0294	FT THOMPSON - FTTHOM1-LNX3345.00 345KV CKT Z
25SP	16ALL	4	TO->FROM	G17_109	BUFFALO - JAMESTOWN 345KV CKT 1	704.9	0.10419	109.0294	FTTHOM1-LNX3345.00 - G16-017-TAP 345.00 345KV CKT 1
20SP	16ALL	4	TO->FROM	G17_109	BUFFALO - JAMESTOWN 345KV CKT 1	704.8	0.10413	103.6016	P13:345:UMZB:# 244 #: BD IN SD. LOSS OF TX
20SP	16ALL	4	TO->FROM	G17_109	BUFFALO - JAMESTOWN 345KV CKT 1	704.8	0.10413	103.6016	HURON (BD 90343-A) 345/230/13.8KV TRANSFORMER CKT 1
20SP	16ALL	4	TO->FROM	G17_109	BUFFALO - JAMESTOWN 345KV CKT 1	704.8	0.10413	103.6016	BRDLAND-LNX3345.00 - HURON 345KV CKT Z
20SP	16ALL	4	TO->FROM	G17_109	BUFFALO - JAMESTOWN 345KV CKT 1	704.8	0.10413	103.6016	ANTELOP-LNX3345.00 - BRDLAND-LNX3345.00 345KV CKT 1
20SP	16ALL	4	TO->FROM	G17_109	BUFFALO - JAMESTOWN 345KV CKT 1	704.8	0.10413	103.7151	ANTELOP-LNX3345.00 - ANTELOPE VALLEY 345KV CKT Z

SEASON	GROUP	SCENARIO	DIRECTION	SOURCE	MONITORED ELEMENT	RATE (MVA)	TDF	CONTINGENCY LOADING %	CONTINGENCY
20SP	16ALL	4	TO->FROM	G17_109	BUFFALO - JAMESTOWN 345KV CKT 1	704.8	0.10413	103.7435	P12:345:UMZB:# 103 #: BD IN SD. LOSS OF LINE
20SP	16ALL	4	TO->FROM	G17_109	BUFFALO - JAMESTOWN 345KV CKT 1	704.8	0.10413	103.7435	P12:345:UMZB:# 102 #: AVS BD IN ND. AVS BRD LR
17SP	16ALL	4	TO->FROM	G17_109	BUFFALO - JAMESTOWN 345KV CKT 1	704.4	0.10401	102.5207	BROADLAND - HURON 230KV CKT 1
17SP	16ALL	4	TO->FROM	G17_109	BUFFALO - JAMESTOWN 345KV CKT 1	704.4	0.10401	102.5349	HURON (BD 90343-A) 345/230/13.8KV TRANSFORMER CKT 1
17SP	16ALL	4	TO->FROM	G17_109	BUFFALO - JAMESTOWN 345KV CKT 1	704.4	0.10401	102.5349	P13:345:UMZB:# 244 #: BD IN SD. LOSS OF TX
17SP	16ALL	4	TO->FROM	G17_109	BUFFALO - JAMESTOWN 345KV CKT 1	704.4	0.10401	102.5349	ANTELOP-LNX3345.00 - BRDLAND-LNX3345.00 345KV CKT 1
17SP	16ALL	4	TO->FROM	G17_109	BUFFALO - JAMESTOWN 345KV CKT 1	704.4	0.10401	102.5349	BRDLAND-LNX3345.00 - HURON 345KV CKT Z
17SP	16ALL	4	TO->FROM	G17_109	BUFFALO - JAMESTOWN 345KV CKT 1	704.4	0.10401	102.6485	ANTELOP-LNX3345.00 - ANTELOPE VALLEY 345KV CKT Z
17SP	16ALL	4	TO->FROM	G17_109	BUFFALO - JAMESTOWN 345KV CKT 1	704.4	0.10401	102.6769	P12:345:UMZB:# 103 #: BD IN SD. LOSS OF LINE
17SP	16ALL	4	TO->FROM	G17_109	BUFFALO - JAMESTOWN 345KV CKT 1	704.4	0.10401	102.6769	P12:345:UMZB:# 102 #: AVS BD IN ND. AVS BRD LR
20SP	16ALL	4	TO->FROM	G17_109	BUFFALO - JAMESTOWN 345KV CKT 1	704.8	0.10392	103.7492	FT THOMPSON - FTTHOM1-LNX3345.00 345KV CKT Z
20SP	16ALL	4	TO->FROM	G17_109	BUFFALO - JAMESTOWN 345KV CKT 1	704.8	0.10392	103.7492	FTTHOM1-LNX3345.00 - G16-017-TAP 345.00 345KV CKT 1
17SP	16ALL	4	TO->FROM	G17_109	BUFFALO - JAMESTOWN 345KV CKT 1	704.4	0.10369	102.5213	FTTHOM1-LNX3345.00 - G16-017-TAP 345.00 345KV CKT 1
17SP	16ALL	4	TO->FROM	G17_109	BUFFALO - JAMESTOWN 345KV CKT 1	704.4	0.10369	102.5213	FT THOMPSON - FTTHOM1-LNX3345.00 345KV CKT Z
25SP	16ALL	4	TO->FROM	G17_109	BUFFALO - JAMESTOWN 345KV CKT 1	704.9	0.10171	108.812	FARGO - SHEYNNE 230KV CKT 1
20SP	16ALL	4	TO->FROM	G17_109	BUFFALO - JAMESTOWN 345KV CKT 1	704.8	0.10148	103.7038	FARGO - SHEYNNE 230KV CKT 1
17SP	16ALL	4	TO->FROM	G17_109	BUFFALO - JAMESTOWN 345KV CKT 1	704.4	0.10083	115.0948	FORBES - ROSEAU 500KV CKT 1
17SP	16ALL	4	TO->FROM	G17_109	BUFFALO - JAMESTOWN 345KV CKT 1	704.4	0.10083	115.5491	ROSEAU - ROSEAUM 2 500.00 500KV CKT 1
17SP	16ALL	4	TO->FROM	G17_109	BUFFALO - JAMESTOWN 345KV CKT 1	704.4	0.10083	115.5491	ROSEAU - ROSEAUM 2 500.00 500KV CKT 1
17SP	16ALL	4	TO->FROM	G17_109	BUFFALO - JAMESTOWN 345KV CKT 1	704.4	0.10083	115.9892	RIEL - ROSEAU 500KV CKT 1
25SP	16ALL	4	TO->FROM	G17_109	BUFFALO - JAMESTOWN 345KV CKT 1	704.9	0.10082	120.3081	FORBES - ROSEAU 500KV CKT 1
25SP	16ALL	4	TO->FROM	G17_109	BUFFALO - JAMESTOWN 345KV CKT 1	704.9	0.10082	120.7195	ROSEAU - ROSEAUM 2 500.00 500KV CKT 1
25SP	16ALL	4	TO->FROM	G17_109	BUFFALO - JAMESTOWN 345KV CKT 1	704.9	0.10082	120.7195	ROSEAU - ROSEAUM 2 500.00 500KV CKT 1
25SP	16ALL	4	TO->FROM	G17_109	BUFFALO - JAMESTOWN 345KV CKT 1	704.9	0.10082	121.1167	RIEL - ROSEAU 500KV CKT 1
20SP	16ALL	4	TO->FROM	G17_109	BUFFALO - JAMESTOWN 345KV CKT 1	704.8	0.10072	116.1578	FORBES - ROSEAU 500KV CKT 1
20SP	16ALL	4	TO->FROM	G17_109	BUFFALO - JAMESTOWN 345KV CKT 1	704.8	0.10072	116.6118	ROSEAU - ROSEAUM 2 500.00 500KV CKT 1
20SP	16ALL	4	TO->FROM	G17_109	BUFFALO - JAMESTOWN 345KV CKT 1	704.8	0.10072	116.6118	ROSEAU - ROSEAUM 2 500.00 500KV CKT 1
20SP	16ALL	4	TO->FROM	G17_109	BUFFALO - JAMESTOWN 345KV CKT 1	704.8	0.10072	117.0517	RIEL - ROSEAU 500KV CKT 1
17G	16ALL	4	TO->FROM	G17_109	BUFFALO - JAMESTOWN 345KV CKT 1	704.9	0.09971	106.1387	FORBES - ROSEAU 500KV CKT 1
17G	16ALL	4	TO->FROM	G17_109	BUFFALO - JAMESTOWN 345KV CKT 1	704.9	0.09971	106.4366	ROSEAU - ROSEAUM 2 500.00 500KV CKT 1
17G	16ALL	4	TO->FROM	G17_109	BUFFALO - JAMESTOWN 345KV CKT 1	704.9	0.09971	106.4366	ROSEAU - ROSEAUM 2 500.00 500KV CKT 1
17G	16ALL	4	TO->FROM	G17_109	BUFFALO - JAMESTOWN 345KV CKT 1	704.9	0.09971	106.7204	RIEL - ROSEAU 500KV CKT 1
16WP	16ALL	4	TO->FROM	G17_109	BUFFALO - JAMESTOWN 345KV CKT 1	716.7	0.09923	102.0092	FORBES - ROSEAU 500KV CKT 1
16WP	16ALL	4	TO->FROM	G17_109	BUFFALO - JAMESTOWN 345KV CKT 1	716.7	0.09923	102.1627	ROSEAU - ROSEAUM 2 500.00 500KV CKT 1
16WP	16ALL	4	TO->FROM	G17_109	BUFFALO - JAMESTOWN 345KV CKT 1	716.7	0.09923	102.1627	ROSEAU - ROSEAUM 2 500.00 500KV CKT 1
16WP	16ALL	4	TO->FROM	G17_109	BUFFALO - JAMESTOWN 345KV CKT 1	716.7	0.09923	102.3301	RIEL - ROSEAU 500KV CKT 1
20WP	16ALL	4	TO->FROM	G17_109	BUFFALO - JAMESTOWN 345KV CKT 1	716.8	0.09871	101.5212	FORBES - ROSEAU 500KV CKT 1
20WP	16ALL	4	TO->FROM	G17_109	BUFFALO - JAMESTOWN 345KV CKT 1	716.8	0.09871	101.6886	ROSEAU - ROSEAUM 2 500.00 500KV CKT 1
20WP	16ALL	4	TO->FROM	G17_109	BUFFALO - JAMESTOWN 345KV CKT 1	716.8	0.09871	101.6886	ROSEAU - ROSEAUM 2 500.00 500KV CKT 1
20WP	16ALL	4	TO->FROM	G17_109	BUFFALO - JAMESTOWN 345KV CKT 1	716.8	0.09871	101.856	RIEL - ROSEAU 500KV CKT 1
25SP	16ALL	4	TO->FROM	G17_109	BUFFALO - JAMESTOWN 345KV CKT 1	704.9	0.09353	103.6839	System Intact
25SP	16ALL	4	TO->FROM	G17_109	BUFFALO - JAMESTOWN 345KV CKT 1	704.9	0.08173	108.5754	MANDAN 4 230.00 - MPC02100TAP4230.00 230KV CKT 1
25SP	00NR	4	TO->FROM	G17_109	BUFFALO - JAMESTOWN 345KV CKT 1	704.9	0.04939	113.1089	CNTSHNT3 345.00 - PRAIRIE3 345.00 345KV CKT 1
25SP	00NR	4	TO->FROM	G17_109	BUFFALO - JAMESTOWN 345KV CKT 1	704.9	0.04939	113.1089	CENTER - CNTSHNT3 345.00 345KV CKT Z1
20SP	00NR	4	TO->FROM	G17_109	BUFFALO - JAMESTOWN 345KV CKT 1	704.7	0.04929	109.3476	CENTER - CNTSHNT3 345.00 345KV CKT Z1
20SP	00NR	4	TO->FROM	G17_109	BUFFALO - JAMESTOWN 345KV CKT 1	704.7	0.04929	109.3476	CNTSHNT3 345.00 - PRAIRIE3 345.00 345KV CKT 1
17SP	00NR	4	TO->FROM	G17_109	BUFFALO - JAMESTOWN 345KV CKT 1	705	0.049	107.3163	CNTSHNT3 345.00 - PRAIRIE3 345.00 345KV CKT 1
17SP	00NR	4	TO->FROM	G17_109	BUFFALO - JAMESTOWN 345KV CKT 1	705	0.049	107.3163	CENTER - CNTSHNT3 345.00 345KV CKT Z1
25SP	00NR	4	TO->FROM	G17_109	BUFFALO - JAMESTOWN 345KV CKT 1	704.9	0.04892	102.3201	P12:345:UMZB:# 103 #: BD IN SD. LOSS OF LINE
25SP	00NR	4	TO->FROM	G17_109	BUFFALO - JAMESTOWN 345KV CKT 1	704.9	0.04873	102.425	FT THOMPSON - FTTHOM1-LNX3345.00 345KV CKT Z
25SP	00NR	4	TO->FROM	G17_109	BUFFALO - JAMESTOWN 345KV CKT 1	704.9	0.04873	102.425	FTTHOM1-LNX3345.00 - G16-017-TAP 345.00 345KV CKT 1
25SP	00NR	4	TO->FROM	G17_109	BUFFALO - JAMESTOWN 345KV CKT 1	704.9	0.04798	102.3484	P12:345:UMZB:# 109 #: LOS GRT IN ND. LOS GRT
25SP	00NR	4	TO->FROM	G17_109	BUFFALO - JAMESTOWN 345KV CKT 1	704.9	0.04798	102.3484	LELAND OLDS - LELAND1-LNX3345.00 345KV CKT Z
17G	16NR	4	TO->FROM	G17_109	BUFFALO - JAMESTOWN 345KV CKT 1	703.9	0.04619	106.8875	CENTER - CNTSHNT3 345.00 345KV CKT Z1
17G	16NR	4	TO->FROM	G17_109	BUFFALO - JAMESTOWN 345KV CKT 1	703.9	0.04619	106.8875	CNTSHNT3 345.00 - PRAIRIE3 345.00 345KV CKT 1

SEASON	GROUP	SCENARIO	DIRECTION	SOURCE	MONITORED ELEMENT	RATE (MVA)	TDF	CONTINGENCY LOADING %	CONTINGENCY
20SP	00NR	4	TO->FROM	G17_109	BUFFALO - JAMESTOWN 345KV CKT 1	704.7	0.04579	112.8782	FORBES - ROSEAU 500KV CKT 1
20SP	00NR	4	TO->FROM	G17_109	BUFFALO - JAMESTOWN 345KV CKT 1	704.7	0.04579	113.3181	ROSEAU - ROSEAUM 2 500.00 500KV CKT 1
20SP	00NR	4	TO->FROM	G17_109	BUFFALO - JAMESTOWN 345KV CKT 1	704.7	0.04579	113.3181	ROSEAU - ROSEAUM 2 500.00 500KV CKT 1
20SP	00NR	4	TO->FROM	G17_109	BUFFALO - JAMESTOWN 345KV CKT 1	704.7	0.04579	113.7438	RIEL - ROSEAU 500KV CKT 1
25SP	00NR	4	TO->FROM	G17_109	BUFFALO - JAMESTOWN 345KV CKT 1	704.9	0.04578	114.4772	FORBES - ROSEAU 500KV CKT 1
25SP	00NR	4	TO->FROM	G17_109	BUFFALO - JAMESTOWN 345KV CKT 1	704.9	0.04578	114.8602	ROSEAU - ROSEAUM 2 500.00 500KV CKT 1
25SP	00NR	4	TO->FROM	G17_109	BUFFALO - JAMESTOWN 345KV CKT 1	704.9	0.04578	114.8602	ROSEAU - ROSEAUM 2 500.00 500KV CKT 1
25SP	00NR	4	TO->FROM	G17_109	BUFFALO - JAMESTOWN 345KV CKT 1	704.9	0.04578	115.229	RIEL - ROSEAU 500KV CKT 1
17SP	00NR	4	TO->FROM	G17_109	BUFFALO - JAMESTOWN 345KV CKT 1	705	0.04553	111.1304	FORBES - ROSEAU 500KV CKT 1
17SP	00NR	4	TO->FROM	G17_109	BUFFALO - JAMESTOWN 345KV CKT 1	705	0.04553	111.5418	ROSEAU - ROSEAUM 2 500.00 500KV CKT 1
17SP	00NR	4	TO->FROM	G17_109	BUFFALO - JAMESTOWN 345KV CKT 1	705	0.04553	111.5418	ROSEAU - ROSEAUM 2 500.00 500KV CKT 1
17SP	00NR	4	TO->FROM	G17_109	BUFFALO - JAMESTOWN 345KV CKT 1	705	0.04553	111.9673	RIEL - ROSEAU 500KV CKT 1
25SP	00NR	4	TO->FROM	G17_109	BUFFALO - JAMESTOWN 345KV CKT 1	704.9	0.04529	102.1837	SQUARE BUTTE - STANTON 230KV CKT 1
25SP	00NR	4	TO->FROM	G17_109	BUFFALO - JAMESTOWN 345KV CKT 1	704.9	0.04525	102.2812	G09_001IST 345.00 - WATERTOWN 345KV CKT 1
25SP	00NR	4	TO->FROM	G17_109	BUFFALO - JAMESTOWN 345KV CKT 1	704.9	0.04513	104.0916	FARGO - SHEYNNE 230KV CKT 1
20SP	00NR	4	TO->FROM	G17_109	BUFFALO - JAMESTOWN 345KV CKT 1	704.7	0.04508	101.593	FARGO - SHEYNNE 230KV CKT 1
25SP	00NR	4	TO->FROM	G17_109	BUFFALO - JAMESTOWN 345KV CKT 1	704.9	0.04486	102.7458	FARGO - JAMES TOWN 230KV CKT 1
25SP	00NR	4	TO->FROM	G17_109	BUFFALO - JAMESTOWN 345KV CKT 1	704.9	0.04483	102.1486	PRAIRIE - WINGER 230KV CKT 1
25SP	00NR	4	TO->FROM	G17_109	BUFFALO - JAMESTOWN 345KV CKT 1	704.9	0.04481	102.6159	FARGO - JAMES TOWN 230KV CKT 2
25SP	00NR	4	TO->FROM	G17_109	BUFFALO - JAMESTOWN 345KV CKT 1	704.9	0.04351	102.1171	GRPRAR1-LNX3345.00 - HOLT.CO3 345.00 345KV CKT 1
25SP	00NR	4	TO->FROM	G17_109	BUFFALO - JAMESTOWN 345KV CKT 1	704.9	0.04351	102.1596	GRPRAR1-LNX3345.00 - YANKTON 345KV CKT Z
17G	16NR	4	TO->FROM	G17_109	BUFFALO - JAMESTOWN 345KV CKT 1	703.9	0.04285	107.5028	FORBES - ROSEAU 500KV CKT 1
17G	16NR	4	TO->FROM	G17_109	BUFFALO - JAMESTOWN 345KV CKT 1	703.9	0.04285	107.7869	ROSEAU - ROSEAUM 2 500.00 500KV CKT 1
17G	16NR	4	TO->FROM	G17_109	BUFFALO - JAMESTOWN 345KV CKT 1	703.9	0.04285	107.7869	ROSEAU - ROSEAUM 2 500.00 500KV CKT 1
17G	16NR	4	TO->FROM	G17_109	BUFFALO - JAMESTOWN 345KV CKT 1	703.9	0.04285	108.071	RIEL - ROSEAU 500KV CKT 1
25SP	00NR	4	TO->FROM	G17_109	BUFFALO - JAMESTOWN 345KV CKT 1	704.9	0.04179	105.1032	HANKINSON - WAHPETON 230KV CKT 1
20SP	00NR	4	TO->FROM	G17_109	BUFFALO - JAMESTOWN 345KV CKT 1	704.7	0.04173	102.1929	HANKINSON - WAHPETON 230KV CKT 1
25SP	16ALL	4	FROM->TO	G17_109	BUFFALO (BUFFALO3) 345/115/41.6KV TRANSFORMER CKT 1	222.1	0.03046	120.832	BISON 3 345.00 - BUFFALO 345KV CKT 1
25SP	16ALL	4	FROM->TO	G17_109	BUFFALO (BUFFALO3) 345/115/41.6KV TRANSFORMER CKT 1	221.8	0.03046	118.9666	BISON 3 345.00 - BUFFALO 345KV CKT 1
17SP	16ALL	4	FROM->TO	G17_109	BUFFALO (BUFFALO3) 345/115/41.6KV TRANSFORMER CKT 1	222.6	0.0304	113.0476	BISON 3 345.00 - BUFFALO 345KV CKT 1
17SP	16ALL	4	FROM->TO	G17_109	BUFFALO (BUFFALO3) 345/115/41.6KV TRANSFORMER CKT 1	222.5	0.0304	111.2557	BISON 3 345.00 - BUFFALO 345KV CKT 1
20SP	16ALL	4	FROM->TO	G17_109	BUFFALO (BUFFALO3) 345/115/41.6KV TRANSFORMER CKT 1	222	0.03039	114.836	BISON 3 345.00 - BUFFALO 345KV CKT 1
20SP	16ALL	4	FROM->TO	G17_109	BUFFALO (BUFFALO3) 345/115/41.6KV TRANSFORMER CKT 1	221.8	0.03039	113.0911	BISON 3 345.00 - BUFFALO 345KV CKT 1
17G	16ALL	4	FROM->TO	G17_109	BUFFALO (BUFFALO3) 345/115/41.6KV TRANSFORMER CKT 1	222.6	0.03006	107.2345	BISON 3 345.00 - BUFFALO 345KV CKT 1
17G	16ALL	4	FROM->TO	G17_109	BUFFALO (BUFFALO3) 345/115/41.6KV TRANSFORMER CKT 1	222.4	0.03006	105.0378	BISON 3 345.00 - BUFFALO 345KV CKT 1
16WP	16ALL	4	FROM->TO	G17_109	BUFFALO (BUFFALO3) 345/115/41.6KV TRANSFORMER CKT 1	222.2	0.02993	111.8632	BISON 3 345.00 - BUFFALO 345KV CKT 1
16WP	16ALL	4	FROM->TO	G17_109	BUFFALO (BUFFALO3) 345/115/41.6KV TRANSFORMER CKT 1	221.8	0.02993	108.8188	BISON 3 345.00 - BUFFALO 345KV CKT 1
20WP	16ALL	4	FROM->TO	G17_109	BUFFALO (BUFFALO3) 345/115/41.6KV TRANSFORMER CKT 1	222.1	0.02984	111.9856	BISON 3 345.00 - BUFFALO 345KV CKT 1
20WP	16ALL	4	FROM->TO	G17_109	BUFFALO (BUFFALO3) 345/115/41.6KV TRANSFORMER CKT 1	221.8	0.02984	108.7556	BISON 3 345.00 - BUFFALO 345KV CKT 1
17SP	16ALL	4	FROM->TO	G17_109	CULBERTSN E7115.00 - WILISTON 115KV CKT 1	149.2	0.17772	100.7989	BEAVERHILL4 230.00 - MEDORA 230KV CKT 1
16WP	16ALL	4	FROM->TO	G17_109	CULBERTSN E7115.00 - WILISTON 115KV CKT 1	148.6	0.17732	100.9637	BELFIELD - MEDORA 230KV CKT 1
16WP	16ALL	4	FROM->TO	G17_109	CULBERTSN E7115.00 - WILISTON 115KV CKT 1	148.6	0.17732	102.7806	BEAVERHILL4 230.00 - MEDORA 230KV CKT 1
17G	16ALL	4	FROM->TO	G17_109	CULBERTSN E7115.00 - WILISTON 115KV CKT 1	149.8	0.17699	104.2029	BELFIELD - MEDORA 230KV CKT 1
17G	16ALL	4	FROM->TO	G17_109	CULBERTSN E7115.00 - WILISTON 115KV CKT 1	149.8	0.17699	105.6716	BEAVERHILL4 230.00 - MEDORA 230KV CKT 1
17SP	16ALL	4	FROM->TO	G17_109	CULBERTSN E7115.00 - WILISTON 115KV CKT 1	149.2	0.05397	102.2118	COALHILL4 230.00 - G17109_T(P) 230.00 230KV CKT 1
17SP	16ALL	4	FROM->TO	G17_109	CULBERTSN E7115.00 - WILISTON 115KV CKT 1	149.2	0.05397	102.2118	COALHILL4 230.00 - FT PECK 230KV CKT 1
16WP	16ALL	4	FROM->TO	G17_109	CULBERTSN E7115.00 - WILISTON 115KV CKT 1	148.6	0.0532	100.8021	COALHILL4 230.00 - G17109_T(P) 230.00 230KV CKT 1
16WP	16ALL	4	FROM->TO	G17_109	CULBERTSN E7115.00 - WILISTON 115KV CKT 1	148.6	0.0532	100.8021	COALHILL4 230.00 - FT PECK 230KV CKT 1
17G	16ALL	4	FROM->TO	G17_109	CULBERTSN E7115.00 - WILISTON 115KV CKT 1	149.8	0.05265	105.6555	COALHILL4 230.00 - G17109_T(P) 230.00 230KV CKT 1
17G	16ALL	4	FROM->TO	G17_109	CULBERTSN E7115.00 - WILISTON 115KV CKT 1	149.8	0.05265	105.6555	COALHILL4 230.00 - FT PECK 230KV CKT 1
17SP	16ALL	4	FROM->TO	G17_109	DAWSON CREEK - FALLON 115KV CKT 1	87.8	0.08187	114.082	DAWSON CREEK - MILES CITY EAST 230KV CKT 1
25SP	16ALL	4	FROM->TO	G17_109	DAWSON CREEK - FALLON 115KV CKT 1	88	0.08178	134.0227	DAWSON CREEK - MILES CITY EAST 230KV CKT 1
16WP	16ALL	4	FROM->TO	G17_109	DAWSON CREEK - FALLON 115KV CKT 1	87.9	0.08175	106.3891	DAWSON CREEK - MILES CITY EAST 230KV CKT 1
20SP	16ALL	4	FROM->TO	G17_109	DAWSON CREEK - FALLON 115KV CKT 1	87.9	0.08173	124.7099	DAWSON CREEK - MILES CITY EAST 230KV CKT 1
20WP	16ALL	4	FROM->TO	G17_109	DAWSON CREEK - FALLON 115KV CKT 1	88	0.08158	109.2727	DAWSON CREEK - MILES CITY EAST 230KV CKT 1

SEASON	GROUP	SCENARIO	DIRECTION	SOURCE	MONITORED ELEMENT	RATE (MVA)	TDF	CONTINGENCY LOADING %	CONTINGENCY
20L	16ALL	4	FROM->TO	G17_109	DAWSON CREEK - FALLON 115KV CKT 1	87.8	0.08117	102.3872	DAWSON CREEK - MILES CITY EAST 230KV CKT 1
25SP	16ALL	4	FROM->TO	G17_109	DICKINSON (DICKNSON2) 230/115/13.8KV TRANSFORMER CKT 2	125	0.04088	102.9824	DICKINSON (KW1A 100) 230/115/13.8KV TRANSFORMER CKT 1
25SP	16ALL	4	FROM->TO	G17_109	DICKINSON (KW1A 100) 230/115/13.8KV TRANSFORMER CKT 1	125	0.04088	101.6224	DICKINSON (DICKNSON2) 230/115/13.8KV TRANSFORMER CKT 2
25SP	16ALL	4	FROM->TO	G17_109	DICKINSON (KW1A 100) 230/115/13.8KV TRANSFORMER CKT 1	125	0.04088	101.7024	DICKINSON (DICKNSON2) 230/115/13.8KV TRANSFORMER CKT 2
20L	16ALL	4	TO->FROM	G17_109	ELK CREEK - NEWELL 115KV CKT 1	89.3	0.057	101.9171	MAURINE - NUNDRWD-LNX3230.00 230KV CKT 1
20L	16ALL	4	TO->FROM	G17_109	ELK CREEK - NEWELL 115KV CKT 1	89.3	0.057	101.9171	NUNDRWD - NUNDRWD-LNX3230.00 230KV CKT Z
20L	16ALL	4	FROM->TO	G17_109	ELK CREEK - RAPID CITY 115KV CKT 1	87.2	0.057	100.1284	NUNDRWD - NUNDRWD-LNX3230.00 230KV CKT Z
20L	16ALL	4	FROM->TO	G17_109	ELK CREEK - RAPID CITY 115KV CKT 1	87.2	0.057	100.1284	MAURINE - NUNDRWD-LNX3230.00 230KV CKT 1
25SP	16ALL	4	TO->FROM	G17_109	ELLENDLMVP4 230.00 - J316_SUB 230.00 230KV CKT 1	342.4	0.06121	138.521	ELLENDLMVP4 230.00 - MERRCRT4 230.00 230KV CKT 1
20SP	16ALL	4	TO->FROM	G17_109	ELLENDLMVP4 230.00 - J316_SUB 230.00 230KV CKT 1	341.9	0.06103	134.9283	ELLENDLMVP4 230.00 - MERRCRT4 230.00 230KV CKT 1
17SP	16ALL	4	TO->FROM	G17_109	ELLENDLMVP4 230.00 - J316_SUB 230.00 230KV CKT 1	341.7	0.06091	142.3436	ELLENDLMVP4 230.00 - MERRCRT4 230.00 230KV CKT 1
20WP	16ALL	4	TO->FROM	G17_109	ELLENDLMVP4 230.00 - J316_SUB 230.00 230KV CKT 1	342	0.06016	123.3263	ELLENDLMVP4 230.00 - MERRCRT4 230.00 230KV CKT 1
16WP	16ALL	4	TO->FROM	G17_109	ELLENDLMVP4 230.00 - J316_SUB 230.00 230KV CKT 1	340.8	0.06006	134.0528	ELLENDLMVP4 230.00 - MERRCRT4 230.00 230KV CKT 1
17G	16ALL	4	TO->FROM	G17_109	ELLENDLMVP4 230.00 - J316_SUB 230.00 230KV CKT 1	341.7	0.05975	138.168	ELLENDLMVP4 230.00 - MERRCRT4 230.00 230KV CKT 1
20L	16ALL	4	TO->FROM	G17_109	ELLENDLMVP4 230.00 - J316_SUB 230.00 230KV CKT 1	342.3	0.05643	117.5519	ELLENDLMVP4 230.00 - MERRCRT4 230.00 230KV CKT 1
25SP	16ALL	4	TO->FROM	G17_109	ELLENDLMVP4 230.00 - J316_SUB 230.00 230KV CKT 1	342.4	0.04133	101.0012	GROTON - GROTON-LNX3 345.00 345KV CKT Z
25SP	16ALL	4	TO->FROM	G17_109	ELLENDLMVP4 230.00 - J316_SUB 230.00 230KV CKT 1	342.4	0.04133	101.0012	GROTON-LNX3 345.00 - LELAND1-LNX3345.00 345KV CKT 1
25SP	16ALL	4	TO->FROM	G17_109	ELLENDLMVP4 230.00 - J316_SUB 230.00 230KV CKT 1	342.4	0.04133	101.1472	P12:345:UMZB:# 109 #: LOS GRT IN ND. LOS GRT
25SP	16ALL	4	TO->FROM	G17_109	ELLENDLMVP4 230.00 - J316_SUB 230.00 230KV CKT 1	342.4	0.04133	101.2348	LELAND OLDS - LELAND1-LNX3345.00 345KV CKT Z
17SP	16ALL	4	TO->FROM	G17_109	ELLENDLMVP4 230.00 - J316_SUB 230.00 230KV CKT 1	341.7	0.04098	103.2204	GROTON - GROTON-LNX3 345.00 345KV CKT Z
17SP	16ALL	4	TO->FROM	G17_109	ELLENDLMVP4 230.00 - J316_SUB 230.00 230KV CKT 1	341.7	0.04098	103.2204	GROTON-LNX3 345.00 - LELAND1-LNX3345.00 345KV CKT 1
17SP	16ALL	4	TO->FROM	G17_109	ELLENDLMVP4 230.00 - J316_SUB 230.00 230KV CKT 1	341.7	0.04098	103.4252	P12:345:UMZB:# 109 #: LOS GRT IN ND. LOS GRT
17SP	16ALL	4	TO->FROM	G17_109	ELLENDLMVP4 230.00 - J316_SUB 230.00 230KV CKT 1	341.7	0.04098	103.4838	LELAND OLDS - LELAND1-LNX3345.00 345KV CKT Z
25SP	16ALL	4	TO->FROM	G17_109	ELLENDLMVP4 230.00 - J316_SUB 230.00 230KV CKT 1	342.4	0.04052	102.6484	CENTER - JAMESTOWN 345KV CKT 1
20SP	16ALL	4	TO->FROM	G17_109	ELLENDLMVP4 230.00 - J316_SUB 230.00 230KV CKT 1	341.9	0.04041	100.0643	CENTER - JAMESTOWN 345KV CKT 1
17G	16ALL	4	TO->FROM	G17_109	ELLENDLMVP4 230.00 - J316_SUB 230.00 230KV CKT 1	341.7	0.04017	100.6087	GROTON - GROTON-LNX3 345.00 345KV CKT Z
17G	16ALL	4	TO->FROM	G17_109	ELLENDLMVP4 230.00 - J316_SUB 230.00 230KV CKT 1	341.7	0.04017	100.6087	GROTON-LNX3 345.00 - LELAND1-LNX3345.00 345KV CKT 1
17G	16ALL	4	TO->FROM	G17_109	ELLENDLMVP4 230.00 - J316_SUB 230.00 230KV CKT 1	341.7	0.04017	100.7843	P12:345:UMZB:# 109 #: LOS GRT IN ND. LOS GRT
17G	16ALL	4	TO->FROM	G17_109	ELLENDLMVP4 230.00 - J316_SUB 230.00 230KV CKT 1	341.7	0.04017	100.8428	LELAND OLDS - LELAND1-LNX3345.00 345KV CKT Z
17SP	16ALL	4	TO->FROM	G17_109	ELLENDLMVP4 230.00 - J316_SUB 230.00 230KV CKT 1	341.7	0.04017	104.4331	CENTER - JAMESTOWN 345KV CKT 1
25SP	16ALL	4	TO->FROM	G17_109	ELLENDLMVP4 230.00 - J316_SUB 230.00 230KV CKT 1	342.4	0.04008	105.4708	BUFFALO - JAMESTOWN 345KV CKT 1
20SP	16ALL	4	TO->FROM	G17_109	ELLENDLMVP4 230.00 - J316_SUB 230.00 230KV CKT 1	341.9	0.03997	102.8617	BUFFALO - JAMESTOWN 345KV CKT 1
17SP	16ALL	4	TO->FROM	G17_109	ELLENDLMVP4 230.00 - J316_SUB 230.00 230KV CKT 1	341.7	0.03981	101.1847	ANTELOP-LNX3345.00 - BRDLAND-LNX3345.00 345KV CKT 1
17SP	16ALL	4	TO->FROM	G17_109	ELLENDLMVP4 230.00 - J316_SUB 230.00 230KV CKT 1	341.7	0.03981	101.1847	BRDLAND-LNX3345.00 - HURON 345KV CKT Z
17SP	16ALL	4	TO->FROM	G17_109	ELLENDLMVP4 230.00 - J316_SUB 230.00 230KV CKT 1	341.7	0.03981	101.1847	P13:345:UMZB:# 244 #: BD IN SD. LOSS OF TX
17SP	16ALL	4	TO->FROM	G17_109	ELLENDLMVP4 230.00 - J316_SUB 230.00 230KV CKT 1	341.7	0.03981	101.1847	HURON (BD 90343-A) 345/230/13.8KV TRANSFORMER CKT 1
17SP	16ALL	4	TO->FROM	G17_109	ELLENDLMVP4 230.00 - J316_SUB 230.00 230KV CKT 1	341.7	0.03981	101.1847	BROADLAND - HURON 230KV CKT 1
17SP	16ALL	4	TO->FROM	G17_109	ELLENDLMVP4 230.00 - J316_SUB 230.00 230KV CKT 1	341.7	0.03981	101.3017	ANTELOP-LNX3345.00 - ANTELOPE VALLEY 345KV CKT Z
17SP	16ALL	4	TO->FROM	G17_109	ELLENDLMVP4 230.00 - J316_SUB 230.00 230KV CKT 1	341.7	0.03981	101.3017	P12:345:UMZB:# 102 #: AVS BD IN ND. AVS BRD LR
17SP	16ALL	4	TO->FROM	G17_109	ELLENDLMVP4 230.00 - J316_SUB 230.00 230KV CKT 1	341.7	0.03981	101.3017	P12:345:UMZB:# 103 #: BD IN SD. LOSS OF LINE
17SP	16ALL	4	TO->FROM	G17_109	ELLENDLMVP4 230.00 - J316_SUB 230.00 230KV CKT 1	341.7	0.03974	106.7638	BUFFALO - JAMESTOWN 345KV CKT 1
17G	16ALL	4	TO->FROM	G17_109	ELLENDLMVP4 230.00 - J316_SUB 230.00 230KV CKT 1	341.7	0.03944	101.3041	CENTER - JAMESTOWN 345KV CKT 1
16WP	16ALL	4	TO->FROM	G17_109	ELLENDLMVP4 230.00 - J316_SUB 230.00 230KV CKT 1	340.8	0.03917	101.5235	BUFFALO - JAMESTOWN 345KV CKT 1
17G	16ALL	4	TO->FROM	G17_109	ELLENDLMVP4 230.00 - J316_SUB 230.00 230KV CKT 1	341.7	0.03902	103.7237	BUFFALO - JAMESTOWN 345KV CKT 1
25SP	16ALL	4	TO->FROM	G17_109	ELLENDLMVP4 230.00 - J316_SUB 230.00 230KV CKT 1	342.4	0.03854	101.2407	BISON 3 345.00 - BUFFALO 345KV CKT 1
17SP	16ALL	4	TO->FROM	G17_109	ELLENDLMVP4 230.00 - J316_SUB 230.00 230KV CKT 1	341.7	0.0382	102.8188	BISON 3 345.00 - BUFFALO 345KV CKT 1
25SP	16ALL	4	TO->FROM	G17_109	ELLENDLMVP4 230.00 - J316_SUB 230.00 230KV CKT 1	342.4	0.03721	103.9509	FORBES - ROSEAU 500KV CKT 1
25SP	16ALL	4	TO->FROM	G17_109	ELLENDLMVP4 230.00 - J316_SUB 230.00 230KV CKT 1	342.4	0.03721	104.1846	ROSEAU - ROSEAUM 2 500.00 500KV CKT 1
25SP	16ALL	4	TO->FROM	G17_109	ELLENDLMVP4 230.00 - J316_SUB 230.00 230KV CKT 1	342.4	0.03721	104.1846	ROSEAU - ROSEAUM 2 500.00 500KV CKT 1
25SP	16ALL	4	TO->FROM	G17_109	ELLENDLMVP4 230.00 - J316_SUB 230.00 230KV CKT 1	342.4	0.03721	104.4182	RIEL - ROSEAU 500KV CKT 1
20SP	16ALL	4	TO->FROM	G17_109	ELLENDLMVP4 230.00 - J316_SUB 230.00 230KV CKT 1	341.9	0.03712	102.3071	FORBES - ROSEAU 500KV CKT 1
20SP	16ALL	4	TO->FROM	G17_109	ELLENDLMVP4 230.00 - J316_SUB 230.00 230KV CKT 1	341.9	0.03712	102.5703	ROSEAU - ROSEAUM 2 500.00 500KV CKT 1
20SP	16ALL	4	TO->FROM	G17_109	ELLENDLMVP4 230.00 - J316_SUB 230.00 230KV CKT 1	341.9	0.03712	102.5703	ROSEAU - ROSEAUM 2 500.00 500KV CKT 1
20SP	16ALL	4	TO->FROM	G17_109	ELLENDLMVP4 230.00 - J316_SUB 230.00 230KV CKT 1	341.9	0.03712	102.8336	RIEL - ROSEAU 500KV CKT 1
17SP	16ALL	4	TO->FROM	G17_109	ELLENDLMVP4 230.00 - J316_SUB 230.00 230KV CKT 1	341.7	0.03692	106.3881	FORBES - ROSEAU 500KV CKT 1

SEASON	GROUP	SCENARIO	DIRECTION	SOURCE	MONITORED ELEMENT	RATE (MVA)	TDF	CONTINGENCY LOADING %	CONTINGENCY
17SP	16ALL	4	TO->FROM	G17_109	ELLENDLMVP4 230.00 - J316_SUB 230.00 230KV CKT 1	341.7	0.03692	106.6514	ROSEAU - ROSEAUM 2 500.00 500KV CKT 1
17SP	16ALL	4	TO->FROM	G17_109	ELLENDLMVP4 230.00 - J316_SUB 230.00 230KV CKT 1	341.7	0.03692	106.6514	ROSEAU - ROSEAUM 2 500.00 500KV CKT 1
17SP	16ALL	4	TO->FROM	G17_109	ELLENDLMVP4 230.00 - J316_SUB 230.00 230KV CKT 1	341.7	0.03692	106.9148	RIEL - ROSEAU 500KV CKT 1
17G	16ALL	4	TO->FROM	G17_109	ELLENDLMVP4 230.00 - J316_SUB 230.00 230KV CKT 1	341.7	0.03624	102.0931	FORBES - ROSEAU 500KV CKT 1
17G	16ALL	4	TO->FROM	G17_109	ELLENDLMVP4 230.00 - J316_SUB 230.00 230KV CKT 1	341.7	0.03624	102.2686	ROSEAU - ROSEAUM 2 500.00 500KV CKT 1
17G	16ALL	4	TO->FROM	G17_109	ELLENDLMVP4 230.00 - J316_SUB 230.00 230KV CKT 1	341.7	0.03624	102.2686	ROSEAU - ROSEAUM 2 500.00 500KV CKT 1
17G	16ALL	4	TO->FROM	G17_109	ELLENDLMVP4 230.00 - J316_SUB 230.00 230KV CKT 1	341.7	0.03624	102.4442	RIEL - ROSEAU 500KV CKT 1
25SP	16ALL	4	TO->FROM	G17_109	ELLENDLMVP4 230.00 - J316_SUB 230.00 230KV CKT 1	318.4	0.03513	101.2802	System Intact
17SP	16ALL	4	TO->FROM	G17_109	ELLENDLMVP4 230.00 - J316_SUB 230.00 230KV CKT 1	317.6	0.03481	103.4521	System Intact
25SP	00NR	4	TO->FROM	G17_109	ELLENDLMVP4 230.00 - J316_SUB 230.00 230KV CKT 1	342.7	0.03427	111.0786	ELLENDLMVP4 230.00 - MERRCRT4 230.00 230KV CKT 1
20SP	00NR	4	TO->FROM	G17_109	ELLENDLMVP4 230.00 - J316_SUB 230.00 230KV CKT 1	342.2	0.03419	110.1522	ELLENDLMVP4 230.00 - MERRCRT4 230.00 230KV CKT 1
17G	16ALL	4	TO->FROM	G17_109	ELLENDLMVP4 230.00 - J316_SUB 230.00 230KV CKT 1	317.6	0.03414	100.8489	System Intact
16WP	00NR	4	TO->FROM	G17_109	ELLENDLMVP4 230.00 - J316_SUB 230.00 230KV CKT 1	340.7	0.03406	117.2583	ELLENDLMVP4 230.00 - MERRCRT4 230.00 230KV CKT 1
17SP	00NR	4	TO->FROM	G17_109	ELLENDLMVP4 230.00 - J316_SUB 230.00 230KV CKT 1	341.7	0.03404	131.8387	ELLENDLMVP4 230.00 - MERRCRT4 230.00 230KV CKT 1
17G	16NR	4	TO->FROM	G17_109	ELLENDLMVP4 230.00 - J316_SUB 230.00 230KV CKT 1	340.6	0.0305	136.101	ELLENDLMVP4 230.00 - MERRCRT4 230.00 230KV CKT 1
25SP	16ALL	4	TO->FROM	G17_109	ELLENDLMVP4 230.00 - MERRCRT4 230.00 230KV CKT 1	382.4	0.05987	117.5146	ELLENDLMVP4 230.00 - J316_SUB 230.00 230KV CKT 1
20SP	16ALL	4	TO->FROM	G17_109	ELLENDLMVP4 230.00 - MERRCRT4 230.00 230KV CKT 1	382.5	0.05969	114.1961	ELLENDLMVP4 230.00 - J316_SUB 230.00 230KV CKT 1
17SP	16ALL	4	TO->FROM	G17_109	ELLENDLMVP4 230.00 - MERRCRT4 230.00 230KV CKT 1	382.2	0.05967	120.8257	ELLENDLMVP4 230.00 - J316_SUB 230.00 230KV CKT 1
20WP	16ALL	4	TO->FROM	G17_109	ELLENDLMVP4 230.00 - MERRCRT4 230.00 230KV CKT 1	382.9	0.05885	103.9603	ELLENDLMVP4 230.00 - J316_SUB 230.00 230KV CKT 1
16WP	16ALL	4	TO->FROM	G17_109	ELLENDLMVP4 230.00 - MERRCRT4 230.00 230KV CKT 1	382.5	0.05883	113.1681	ELLENDLMVP4 230.00 - J316_SUB 230.00 230KV CKT 1
17G	16ALL	4	TO->FROM	G17_109	ELLENDLMVP4 230.00 - MERRCRT4 230.00 230KV CKT 1	382.5	0.05853	117.0562	ELLENDLMVP4 230.00 - J316_SUB 230.00 230KV CKT 1
17SP	00NR	4	TO->FROM	G17_109	ELLENDLMVP4 230.00 - MERRCRT4 230.00 230KV CKT 1	382.5	0.03334	111.5213	ELLENDLMVP4 230.00 - J316_SUB 230.00 230KV CKT 1
17G	16NR	4	TO->FROM	G17_109	ELLENDLMVP4 230.00 - MERRCRT4 230.00 230KV CKT 1	382.4	0.02988	114.922	ELLENDLMVP4 230.00 - J316_SUB 230.00 230KV CKT 1
25SP	16ALL	4	FROM->TO	G17_109	ELLENDLMVP4 230.00 - OAKES 230KV CKT 1	350.4	0.03934	116.3893	BSSOUTH3 345.00 - J436&437_POI345.00 345KV CKT 1
20SP	16ALL	4	FROM->TO	G17_109	ELLENDLMVP4 230.00 - OAKES 230KV CKT 1	350	0.03918	113.4457	BSSOUTH3 345.00 - J436&437_POI345.00 345KV CKT 1
20WP	16ALL	4	FROM->TO	G17_109	ELLENDLMVP4 230.00 - OAKES 230KV CKT 1	350.8	0.03853	107.6693	BSSOUTH3 345.00 - J436&437_POI345.00 345KV CKT 1
17SP	16ALL	4	FROM->TO	G17_109	FARGO - SHEYNNE 230KV CKT 1	327	0.07786	110.3976	CENTER - JAMESTOWN 345KV CKT 1
17SP	16ALL	4	FROM->TO	G17_109	FARGO - SHEYNNE 230KV CKT 1	327	0.07772	130.537	BUFFALO - JAMESTOWN 345KV CKT 1
20SP	16ALL	4	FROM->TO	G17_109	FARGO - SHEYNNE 230KV CKT 1	329.7	0.07768	110.8389	CENTER - JAMESTOWN 345KV CKT 1
25SP	16ALL	4	FROM->TO	G17_109	FARGO - SHEYNNE 230KV CKT 1	329.3	0.07764	113.6228	CENTER - JAMESTOWN 345KV CKT 1
20SP	16ALL	4	FROM->TO	G17_109	FARGO - SHEYNNE 230KV CKT 1	329.7	0.07754	133.7846	BUFFALO - JAMESTOWN 345KV CKT 1
25SP	16ALL	4	FROM->TO	G17_109	FARGO - SHEYNNE 230KV CKT 1	329.3	0.0775	136.8697	BUFFALO - JAMESTOWN 345KV CKT 1
20SP	16ALL	4	FROM->TO	G17_109	FARGO - SHEYNNE 230KV CKT 1	329.7	0.06518	101.9448	BISON 3 345.00 - BUFFALO 345KV CKT 1
25SP	16ALL	4	FROM->TO	G17_109	FARGO - SHEYNNE 230KV CKT 1	329.3	0.06517	103.3526	BISON 3 345.00 - BUFFALO 345KV CKT 1
17SP	16ALL	4	TO->FROM	G17_109	FT RANDAL - FT THOMPSON 230KV CKT 1	319.6	0.0597	100.2628	GR ISLD-LNX3345.00 - HOLT.CO3 345.00 345KV CKT 1
17SP	16ALL	4	TO->FROM	G17_109	FT RANDAL - FT THOMPSON 230KV CKT 1	319.6	0.0597	100.2628	GR ISLD-LNX3345.00 - GRAND ISLAND 345KV CKT Z
17SP	16ALL	4	TO->FROM	G17_109	FT RANDAL - FT THOMPSON 230KV CKT 1	319.6	0.05895	100.5006	FT RANDAL - LAKE PLATT 230KV CKT 1
17SP	16ALL	4	TO->FROM	G17_109	FT RANDAL - FT THOMPSON 230KV CKT 1	319.6	0.05895	103.0976	P12:230:UMZW:# 739 #: FT IN SD. FT-LP LINE FAULT
17SP	16ALL	4	FROM->TO	G17_109	G14_001IST 115.00 - NEWELL 115KV CKT 1	88.9	0.05892	104.5129	MAURINE - NUNDRWD-LNX3230.00 230KV CKT 1
17SP	16ALL	4	FROM->TO	G17_109	G14_001IST 115.00 - NEWELL 115KV CKT 1	88.9	0.05892	104.5129	NUNDRWD - NUNDRWD-LNX3230.00 230KV CKT Z
20L	16ALL	4	FROM->TO	G17_109	G14_001IST 115.00 - NEWELL 115KV CKT 1	88.4	0.057	109.8552	NUNDRWD - NUNDRWD-LNX3230.00 230KV CKT Z
20L	16ALL	4	FROM->TO	G17_109	G14_001IST 115.00 - NEWELL 115KV CKT 1	88.4	0.057	109.8552	MAURINE - NUNDRWD-LNX3230.00 230KV CKT 1
17G	16ALL	4	TO->FROM	G17_109	GARRISON - STANTONTAP 7115.00 115KV CKT 1	121	0.03731	102.238	CENTER - COYOTE 345KV CKT 1
16WP	16ALL	4	TO->FROM	G17_109	GARRISON - STANTONTAP 7115.00 115KV CKT 1	131.9	0.03687	106.4716	CENTER - COYOTE 345KV CKT 1
20WP	16ALL	4	TO->FROM	G17_109	GARRISON - STANTONTAP 7115.00 115KV CKT 1	132	0.03523	106.6576	CENTER - COYOTE 345KV CKT 1
17G	16ALL	4	TO->FROM	G17_109	GERALD GENTLEMAN STATION - OGALLALA 230KV CKT 1	319.6	0.0424	115.9474	GERALD GENTLEMAN STATION - KEYSTONE 345KV CKT 1
20L	16ALL	4	TO->FROM	G17_109	GLENHAM - L3 HAWDON 230KV CKT 1	209.7	0.07018	103.6128	BISON - MAURINE 230KV CKT 1
20L	16ALL	4	TO->FROM	G17_109	GLENHAM - L3 HAWDON 230KV CKT 1	209.7	0.07018	105.2341	BISON - HETINGER 230KV CKT 1
25SP	16ALL	4	TO->FROM	G17_109	GLENHAM - L3 HAWDON 230KV CKT 1	210	0.06503	100.381	G16-017-TAP 345.00 - LELAND2-LNX3345.00 345KV CKT 1
25SP	16ALL	4	TO->FROM	G17_109	GLENHAM - L3 HAWDON 230KV CKT 1	210	0.06503	101.1905	LELAND OLDS - LELAND2-LNX3345.00 345KV CKT Z
25SP	16ALL	4	TO->FROM	G17_109	GLENHAM - L3 HAWDON 230KV CKT 1	210	0.06503	102.0952	P12:345:UMZB:# 108 #: LOS FT IN ND. LOS FT
25SP	16ALL	4	TO->FROM	G17_109	GLENHAM - L3 HAWDON 230KV CKT 1	210	0.06503	103.2857	FT THOMPSON - FTTHOM1-LNX3345.00 345KV CKT Z
25SP	16ALL	4	TO->FROM	G17_109	GLENHAM - L3 HAWDON 230KV CKT 1	210	0.06503	103.2857	FTTHOM1-LNX3345.00 - G16-017-TAP 345.00 345KV CKT 1
20L	16ALL	4	TO->FROM	G17_109	GLENHAM - L3 HAWDON 230KV CKT 1	209.7	0.06178	109.2456	G16-017-TAP 345.00 - LELAND2-LNX3345.00 345KV CKT 1
20L	16ALL	4	TO->FROM	G17_109	GLENHAM - L3 HAWDON 230KV CKT 1	209.7	0.06178	109.8655	LELAND OLDS - LELAND2-LNX3345.00 345KV CKT Z

SEASON	GROUP	SCENARIO	DIRECTION	SOURCE	MONITORED ELEMENT	RATE (MVA)	TDF	CONTINGENCY LOADING %	CONTINGENCY
20L	16ALL	4	TO->FROM	G17_109	GLENHAM - L3 HAWDON 230KV CKT 1	209.7	0.06178	110.867	P12:345:UMZB:# 108 #: LOS FT IN ND. LOS FT
20L	16ALL	4	TO->FROM	G17_109	GLENHAM - L3 HAWDON 230KV CKT 1	209.7	0.06178	112.2022	FTTHOM1-LNX3345.00 - G16-017-TAP 345.00 345KV CKT 1
20L	16ALL	4	TO->FROM	G17_109	GLENHAM - L3 HAWDON 230KV CKT 1	209.7	0.06178	112.2022	FT THOMPSON - FTTHOM1-LNX3345.00 345KV CKT Z
20L	16ALL	4	TO->FROM	G17_109	GLENHAM - L3 HAWDON 230KV CKT 1	209.7	0.05653	101.4993	BROADLAND - HURON 230KV CKT 1
20L	16ALL	4	TO->FROM	G17_109	GLENHAM - L3 HAWDON 230KV CKT 1	209.7	0.05653	101.547	ANTELOP-LNX3345.00 - BRDLAND-LNX3345.00 345KV CKT 1
20L	16ALL	4	TO->FROM	G17_109	GLENHAM - L3 HAWDON 230KV CKT 1	209.7	0.05653	101.547	BRDLAND-LNX3345.00 - HURON 345KV CKT Z
20L	16ALL	4	TO->FROM	G17_109	GLENHAM - L3 HAWDON 230KV CKT 1	209.7	0.05653	101.547	HURON (BD 90343-A) 345/230/13.8KV TRANSFORMER CKT 1
20L	16ALL	4	TO->FROM	G17_109	GLENHAM - L3 HAWDON 230KV CKT 1	209.7	0.05653	101.547	P13:345:UMZB:# 244 #: BD IN SD. LOSS OF TX
20L	16ALL	4	TO->FROM	G17_109	GLENHAM - L3 HAWDON 230KV CKT 1	209.7	0.05653	101.7377	P12:345:UMZB:# 102 #: AVS BD IN ND. AVS BRD LR
20L	16ALL	4	TO->FROM	G17_109	GLENHAM - L3 HAWDON 230KV CKT 1	209.7	0.05653	101.7377	P12:345:UMZB:# 103 #: BD IN SD. LOSS OF LINE
20L	16ALL	4	TO->FROM	G17_109	GLENHAM - L3 HAWDON 230KV CKT 1	209.7	0.05653	101.7854	ANTELOP-LNX3345.00 - ANTELOPE VALLEY 345KV CKT Z
25SP	16ALL	4	TO->FROM	G17_109	GLENHAM - L3 HAWDON 230KV CKT 1	210	0.05189	100.0114	RIEL - ROSEAU 500KV CKT 1
20L	16ALL	4	TO->FROM	G17_109	GLENHAM - L3 HAWDON 230KV CKT 1	209.7	0.04952	103.4163	FORBES - ROSEAU 500KV CKT 1
20L	16ALL	4	TO->FROM	G17_109	GLENHAM - L3 HAWDON 230KV CKT 1	209.7	0.04952	103.7024	ROSEAU - ROSEAUM 2 500.00 500KV CKT 1
20L	16ALL	4	TO->FROM	G17_109	GLENHAM - L3 HAWDON 230KV CKT 1	209.7	0.04952	103.7024	ROSEAU - ROSEAUM 2 500.00 500KV CKT 1
20L	16ALL	4	TO->FROM	G17_109	GLENHAM - L3 HAWDON 230KV CKT 1	209.7	0.04952	103.9886	RIEL - ROSEAU 500KV CKT 1
25SP	16ALL	4	FROM->TO	G17_109	GRANITE FALLS - MN VALLEY TAP 230KV CKT 1	257.6	0.0509	103.6475	GRANITE FALLS - MN VALLEY TAP 230KV CKT 1
20SP	16ALL	4	FROM->TO	G17_109	GRANITE FALLS - MN VALLEY TAP 230KV CKT 1	258.8	0.05055	102.8841	GRANITE FALLS - MN VALLEY TAP 230KV CKT 1
20L	16ALL	4	FROM->TO	G17_109	GRANITE FALLS - MN VALLEY TAP 230KV CKT 1	257.8	0.04645	103.2661	GRANITE FALLS - MN VALLEY TAP 230KV CKT 1
25SP	16ALL	4	FROM->TO	G17_109	HESKETT - WISHEK 230KV CKT 1	256.4	0.07413	101.3885	BUFFALO - JAMESTOWN 345KV CKT 1
17SP	16ALL	4	FROM->TO	G17_109	HESKETT - WISHEK 230KV CKT 1	256.6	0.07389	105.0928	BUFFALO - JAMESTOWN 345KV CKT 1
17SP	16ALL	4	FROM->TO	G17_109	HESKETT - WISHEK 230KV CKT 1	256.6	0.06866	104.1777	FORBES - ROSEAU 500KV CKT 1
17SP	16ALL	4	FROM->TO	G17_109	HESKETT - WISHEK 230KV CKT 1	256.6	0.06866	104.8402	ROSEAU - ROSEAUM 2 500.00 500KV CKT 1
17SP	16ALL	4	FROM->TO	G17_109	HESKETT - WISHEK 230KV CKT 1	256.6	0.06866	104.8402	ROSEAU - ROSEAUM 2 500.00 500KV CKT 1
17SP	16ALL	4	FROM->TO	G17_109	HESKETT - WISHEK 230KV CKT 1	256.6	0.06866	105.4638	RIEL - ROSEAU 500KV CKT 1
25SP	16ALL	4	FROM->TO	G17_109	HESKETT (HESKETT TR1) 230/115/13.8KV TRANSFORMER CKT 1	124.3	0.04697	114.6388	HESKETT - MANDAN 4 230.00 230KV CKT 1
25SP	16ALL	4	FROM->TO	G17_109	HESKETT (HESKETT TR1) 230/115/13.8KV TRANSFORMER CKT 1	124.2	0.04697	114.7311	HESKETT - MANDAN 4 230.00 230KV CKT 1
20SP	16ALL	4	FROM->TO	G17_109	HESKETT (HESKETT TR1) 230/115/13.8KV TRANSFORMER CKT 1	124.4	0.04682	104.5305	HESKETT - MANDAN 4 230.00 230KV CKT 1
20SP	16ALL	4	FROM->TO	G17_109	HESKETT (HESKETT TR1) 230/115/13.8KV TRANSFORMER CKT 1	124.3	0.04682	104.5342	HESKETT - MANDAN 4 230.00 230KV CKT 1
17SP	16ALL	4	FROM->TO	G17_109	HESKETT (HESKETT TR1) 230/115/13.8KV TRANSFORMER CKT 1	124.7	0.04677	118.3031	HESKETT - MANDAN 4 230.00 230KV CKT 1
17SP	16ALL	4	FROM->TO	G17_109	HESKETT (HESKETT TR1) 230/115/13.8KV TRANSFORMER CKT 1	124.6	0.04677	118.3981	HESKETT - MANDAN 4 230.00 230KV CKT 1
16WP	16ALL	4	FROM->TO	G17_109	HESKETT (HESKETT TR1) 230/115/13.8KV TRANSFORMER CKT 1	124.8	0.04608	102.2051	HESKETT - MANDAN 4 230.00 230KV CKT 1
16WP	16ALL	4	FROM->TO	G17_109	HESKETT (HESKETT TR1) 230/115/13.8KV TRANSFORMER CKT 1	124.8	0.04608	102.2051	HESKETT - MANDAN 4 230.00 230KV CKT 1
17G	16ALL	4	FROM->TO	G17_109	HESKETT (HESKETT TR1) 230/115/13.8KV TRANSFORMER CKT 1	124.7	0.04584	105.4114	HESKETT - MANDAN 4 230.00 230KV CKT 1
17G	16ALL	4	FROM->TO	G17_109	HESKETT (HESKETT TR1) 230/115/13.8KV TRANSFORMER CKT 1	124.7	0.04584	105.4916	HESKETT - MANDAN 4 230.00 230KV CKT 1
25SP	16ALL	4	TO->FROM	G17_109	KARLSTAD - WINGER 230KV CKT 1	286.4	0.04129	100.6676	ROSEAU - ROSEAUM 2 500.00 500KV CKT 1
25SP	16ALL	4	TO->FROM	G17_109	KARLSTAD - WINGER 230KV CKT 1	286.4	0.04129	100.6676	ROSEAU - ROSEAUM 2 500.00 500KV CKT 1
25SP	16ALL	4	TO->FROM	G17_109	KARLSTAD - WINGER 230KV CKT 1	286.4	0.04129	101.9944	RIEL - ROSEAU 500KV CKT 1
17SP	16ALL	4	TO->FROM	G17_109	KARLSTAD - WINGER 230KV CKT 1	286.4	0.04094	101.7779	FORBES - ROSEAU 500KV CKT 1
17SP	16ALL	4	TO->FROM	G17_109	KARLSTAD - WINGER 230KV CKT 1	286.4	0.04094	103.1397	ROSEAU - ROSEAUM 2 500.00 500KV CKT 1
17SP	16ALL	4	TO->FROM	G17_109	KARLSTAD - WINGER 230KV CKT 1	286.4	0.04094	103.1397	ROSEAU - ROSEAUM 2 500.00 500KV CKT 1
17SP	16ALL	4	TO->FROM	G17_109	KARLSTAD - WINGER 230KV CKT 1	286.4	0.04094	104.5014	RIEL - ROSEAU 500KV CKT 1
20SP	16ALL	4	TO->FROM	G17_109	KARLSTAD - WINGER 230KV CKT 1	286	0.04022	105.4056	FORBES - ROSEAU 500KV CKT 1
20SP	16ALL	4	TO->FROM	G17_109	KARLSTAD - WINGER 230KV CKT 1	286	0.04022	106.8042	ROSEAU - ROSEAUM 2 500.00 500KV CKT 1
20SP	16ALL	4	TO->FROM	G17_109	KARLSTAD - WINGER 230KV CKT 1	286	0.04022	106.8042	ROSEAU - ROSEAUM 2 500.00 500KV CKT 1
20SP	16ALL	4	TO->FROM	G17_109	KARLSTAD - WINGER 230KV CKT 1	286	0.04022	108.1329	RIEL - ROSEAU 500KV CKT 1
20SP	16ALL	4	FROM->TO	G17_109	LEWIS & CLARK - RICHLAND 115KV CKT 1	100.9	0.28176	110.9217	BELFIELD - MEDORA 230KV CKT 1
20SP	16ALL	4	FROM->TO	G17_109	LEWIS & CLARK - RICHLAND 115KV CKT 1	100.9	0.28176	114.886	BEAVERHILL4 230.00 - MEDORA 230KV CKT 1
25SP	16ALL	4	FROM->TO	G17_109	LEWIS & CLARK - RICHLAND 115KV CKT 1	100.6	0.28173	100.0119	BELFIELD - MEDORA 230KV CKT 1
25SP	16ALL	4	FROM->TO	G17_109	LEWIS & CLARK - RICHLAND 115KV CKT 1	100.6	0.28173	104.1869	BEAVERHILL4 230.00 - MEDORA 230KV CKT 1
20WP	16ALL	4	FROM->TO	G17_109	LEWIS & CLARK - RICHLAND 115KV CKT 1	124	0.28159	102.6226	BEAVERHILL4 230.00 - MEDORA 230KV CKT 1
17SP	16ALL	4	FROM->TO	G17_109	LEWIS & CLARK - RICHLAND 115KV CKT 1	101	0.2814	117.6238	BEAVERHILL4 230.00 - DAWSON CREEK 230KV CKT 1
17SP	16ALL	4	FROM->TO	G17_109	LEWIS & CLARK - RICHLAND 115KV CKT 1	101	0.2814	137.1287	BELFIELD - MEDORA 230KV CKT 1
17SP	16ALL	4	FROM->TO	G17_109	LEWIS & CLARK - RICHLAND 115KV CKT 1	101	0.2814	140.9901	BEAVERHILL4 230.00 - MEDORA 230KV CKT 1
16WP	16ALL	4	FROM->TO	G17_109	LEWIS & CLARK - RICHLAND 115KV CKT 1	124	0.28113	101.5226	BEAVERHILL4 230.00 - DAWSON CREEK 230KV CKT 1

SEASON	GROUP	SCENARIO	DIRECTION	SOURCE	MONITORED ELEMENT	RATE (MVA)	TDF	CONTINGENCY LOADING %	CONTINGENCY
16WP	16ALL	4	FROM->TO	G17_109	LEWIS & CLARK - RICHLAND 115KV CKT 1	124	0.28113	116.4419	BELFIELD - MEDORA 230KV CKT 1
16WP	16ALL	4	FROM->TO	G17_109	LEWIS & CLARK - RICHLAND 115KV CKT 1	124	0.28113	120.2323	BEAVERHILL4 230.00 - MEDORA 230KV CKT 1
17G	16ALL	4	FROM->TO	G17_109	LEWIS & CLARK - RICHLAND 115KV CKT 1	101	0.28091	114.7485	BELFIELD - MEDORA 230KV CKT 1
17G	16ALL	4	FROM->TO	G17_109	LEWIS & CLARK - RICHLAND 115KV CKT 1	101	0.28091	118.5109	BEAVERHILL4 230.00 - MEDORA 230KV CKT 1
17SP	00NR	4	FROM->TO	G17_109	LEWIS & CLARK - RICHLAND 115KV CKT 1	101	0.28019	107.4859	BELFIELD - MEDORA 230KV CKT 1
17SP	00NR	4	FROM->TO	G17_109	LEWIS & CLARK - RICHLAND 115KV CKT 1	101	0.28019	109.5651	BEAVERHILL4 230.00 - DAWSON CREEK 230KV CKT 1
17SP	00NR	4	FROM->TO	G17_109	LEWIS & CLARK - RICHLAND 115KV CKT 1	101	0.28019	111.3473	BEAVERHILL4 230.00 - MEDORA 230KV CKT 1
17G	16NR	4	FROM->TO	G17_109	LEWIS & CLARK - RICHLAND 115KV CKT 1	100.9	0.27787	100.0182	BELFIELD - MEDORA 230KV CKT 1
17G	16NR	4	FROM->TO	G17_109	LEWIS & CLARK - RICHLAND 115KV CKT 1	100.9	0.27787	103.7843	BEAVERHILL4 230.00 - MEDORA 230KV CKT 1
17SP	16ALL	4	FROM->TO	G17_109	LEWIS & CLARK - RICHLAND 115KV CKT 1	101	0.20686	101.5445	LTLMISS - RHAME 4 230.00 230KV CKT 1
17SP	16ALL	4	FROM->TO	G17_109	LEWIS & CLARK - RICHLAND 115KV CKT 1	101	0.20686	104.5148	BAKER - LTLMISS 230KV CKT 1
17SP	16ALL	4	FROM->TO	G17_109	LEWIS & CLARK - RICHLAND 115KV CKT 1	101	0.20625	108.7287	BELFIELD - CHARLIE CREEK 345KV CKT 1
17SP	00NR	4	FROM->TO	G17_109	LEWIS & CLARK - RICHLAND 115KV CKT 1	101	0.17893	105.0075	CULBERTSN E7115.00 - WILISTON 115KV CKT 1
20SP	16ALL	4	FROM->TO	G17_109	LEWIS & CLARK - RICHLAND 115KV CKT 1	100.9	0.17877	103.8573	CULBERTSN E7115.00 - WILISTON 115KV CKT 1
17SP	16ALL	4	FROM->TO	G17_109	LEWIS & CLARK - RICHLAND 115KV CKT 1	101	0.17846	100.3802	CULBERTSN E7115.00 - CULBERTSON 115KV CKT 1
17SP	16ALL	4	FROM->TO	G17_109	LEWIS & CLARK - RICHLAND 115KV CKT 1	101	0.17846	105.5287	CULBERTSON - POPLAR 115KV CKT 1
17SP	16ALL	4	FROM->TO	G17_109	LEWIS & CLARK - RICHLAND 115KV CKT 1	101	0.17846	108.9941	POPLAR - WOLF POINT 115KV CKT 1
17SP	16ALL	4	FROM->TO	G17_109	LEWIS & CLARK - RICHLAND 115KV CKT 1	101	0.17841	125.1129	CULBERTSN E7115.00 - WILISTON 115KV CKT 1
16WP	16ALL	4	FROM->TO	G17_109	LEWIS & CLARK - RICHLAND 115KV CKT 1	124	0.17818	109.5742	CULBERTSN E7115.00 - WILISTON 115KV CKT 1
17G	16ALL	4	FROM->TO	G17_109	LEWIS & CLARK - RICHLAND 115KV CKT 1	101	0.17789	107.9762	CULBERTSN E7115.00 - WILISTON 115KV CKT 1
17SP	16ALL	4	FROM->TO	G17_109	LEWIS & CLARK - RICHLAND 115KV CKT 1	101	0.16373	102.2535	BOWMAN - RHAME 4 230.00 230KV CKT 1
17SP	16ALL	4	FROM->TO	G17_109	LEWIS & CLARK - RICHLAND 115KV CKT 1	101	0.16242	108.2733	BISON - MAURINE 230KV CKT 1
17SP	16ALL	4	FROM->TO	G17_109	LEWIS & CLARK - RICHLAND 115KV CKT 1	101	0.16242	109.1644	BISON - HETINGER 230KV CKT 1
17SP	16ALL	4	FROM->TO	G17_109	LEWIS & CLARK - RICHLAND 115KV CKT 1	101	0.16169	102.998	DAWSON CREEK - MILES CITY EAST 230KV CKT 1
17SP	16ALL	4	FROM->TO	G17_109	LEWIS & CLARK - RICHLAND 115KV CKT 1	101	0.15984	107.8574	BELFIELD - DAGLUM 4230.00 230KV CKT 1
17SP	16ALL	4	FROM->TO	G17_109	LEWIS & CLARK - RICHLAND 115KV CKT 1	101	0.15958	100.6416	CABIN CREEK - GLENDIVE CT 115KV CKT 1
17SP	16ALL	4	FROM->TO	G17_109	LEWIS & CLARK - RICHLAND 115KV CKT 1	101	0.15063	100.5822	G15046_1 345.00 - TANDE 3345.00 345KV CKT 1
17SP	16ALL	4	FROM->TO	G17_109	LEWIS & CLARK - RICHLAND 115KV CKT 1	101	0.14883	102.103	CHAR.CK4 230.00 - WATFORD 230KV CKT 1
17SP	16ALL	4	FROM->TO	G17_109	LEWIS & CLARK - RICHLAND 115KV CKT 1	101	0.14521	110.8436	CHARLIE CREEK (CCR KV2A) 345/115/13.8KV TRANSFORMER CKT 1
25SP	16ALL	4	FROM->TO	G17_109	MAPLE RIVER TAP NORTH - SHEYNNE 115KV CKT 1	158	0.03046	141.3089	BISON 3 345.00 - BUFFALO 345KV CKT 1
17SP	16ALL	4	FROM->TO	G17_109	MAPLE RIVER TAP NORTH - SHEYNNE 115KV CKT 1	159.9	0.0304	130.7342	BISON 3 345.00 - BUFFALO 345KV CKT 1
20SP	16ALL	4	FROM->TO	G17_109	MAPLE RIVER TAP NORTH - SHEYNNE 115KV CKT 1	158.2	0.03039	133.9671	BISON 3 345.00 - BUFFALO 345KV CKT 1
17G	16ALL	4	FROM->TO	G17_109	MAPLE RIVER TAP NORTH - SHEYNNE 115KV CKT 1	160.3	0.03006	121.5246	BISON 3 345.00 - BUFFALO 345KV CKT 1
16WP	16ALL	4	FROM->TO	G17_109	MAPLE RIVER TAP NORTH - SHEYNNE 115KV CKT 1	155.7	0.02993	126.6281	BISON 3 345.00 - BUFFALO 345KV CKT 1
20WP	16ALL	4	FROM->TO	G17_109	MAPLE RIVER TAP NORTH - SHEYNNE 115KV CKT 1	155.6	0.02984	126.2339	BISON 3 345.00 - BUFFALO 345KV CKT 1
25SP	16ALL	4	FROM->TO	G17_109	MAURINE (MA KV1A) 230/115/13.8KV TRANSFORMER CKT 1	123	0.09686	104.0195	MAURINE - NUNDRWD-LNX3230.00 230KV CKT 1
25SP	16ALL	4	FROM->TO	G17_109	MAURINE (MA KV1A) 230/115/13.8KV TRANSFORMER CKT 1	123	0.09686	104.0195	NUNDRWD - NUNDRWD-LNX3230.00 230KV CKT Z
25SP	16ALL	4	FROM->TO	G17_109	MAURINE (MA KV1A) 230/115/13.8KV TRANSFORMER CKT 1	122.5	0.09686	104.4441	MAURINE - NUNDRWD-LNX3230.00 230KV CKT 1
25SP	16ALL	4	FROM->TO	G17_109	MAURINE (MA KV1A) 230/115/13.8KV TRANSFORMER CKT 1	122.5	0.09686	104.4441	NUNDRWD - NUNDRWD-LNX3230.00 230KV CKT Z
17SP	16ALL	4	FROM->TO	G17_109	MAURINE (MA KV1A) 230/115/13.8KV TRANSFORMER CKT 1	123.7	0.09679	107.1237	MAURINE - NUNDRWD-LNX3230.00 230KV CKT 1
17SP	16ALL	4	FROM->TO	G17_109	MAURINE (MA KV1A) 230/115/13.8KV TRANSFORMER CKT 1	123.7	0.09679	107.1237	NUNDRWD - NUNDRWD-LNX3230.00 230KV CKT Z
17SP	16ALL	4	FROM->TO	G17_109	MAURINE (MA KV1A) 230/115/13.8KV TRANSFORMER CKT 1	123.5	0.09679	107.2972	MAURINE - NUNDRWD-LNX3230.00 230KV CKT 1
17SP	16ALL	4	FROM->TO	G17_109	MAURINE (MA KV1A) 230/115/13.8KV TRANSFORMER CKT 1	123.5	0.09679	107.2972	NUNDRWD - NUNDRWD-LNX3230.00 230KV CKT Z
20SP	16ALL	4	FROM->TO	G17_109	MAURINE (MA KV1A) 230/115/13.8KV TRANSFORMER CKT 1	123.1	0.09613	100.0877	MAURINE - NUNDRWD-LNX3230.00 230KV CKT 1
20SP	16ALL	4	FROM->TO	G17_109	MAURINE (MA KV1A) 230/115/13.8KV TRANSFORMER CKT 1	123.1	0.09613	100.0877	NUNDRWD - NUNDRWD-LNX3230.00 230KV CKT Z
20SP	16ALL	4	FROM->TO	G17_109	MAURINE (MA KV1A) 230/115/13.8KV TRANSFORMER CKT 1	122.8	0.09613	100.2508	MAURINE - NUNDRWD-LNX3230.00 230KV CKT 1
20SP	16ALL	4	FROM->TO	G17_109	MAURINE (MA KV1A) 230/115/13.8KV TRANSFORMER CKT 1	122.8	0.09613	100.2508	NUNDRWD - NUNDRWD-LNX3230.00 230KV CKT Z
20L	16ALL	4	FROM->TO	G17_109	MAURINE (MA KV1A) 230/115/13.8KV TRANSFORMER CKT 1	124.9	0.09506	113.0344	NUNDRWD - NUNDRWD-LNX3230.00 230KV CKT Z
20L	16ALL	4	FROM->TO	G17_109	MAURINE (MA KV1A) 230/115/13.8KV TRANSFORMER CKT 1	124.9	0.09506	113.0344	MAURINE - NUNDRWD-LNX3230.00 230KV CKT 1
20L	16ALL	4	FROM->TO	G17_109	MAURINE (MA KV1A) 230/115/13.8KV TRANSFORMER CKT 1	124.8	0.09506	113.125	MAURINE - NUNDRWD-LNX3230.00 230KV CKT 1
20L	16ALL	4	FROM->TO	G17_109	MAURINE (MA KV1A) 230/115/13.8KV TRANSFORMER CKT 1	124.8	0.09506	113.125	NUNDRWD - NUNDRWD-LNX3230.00 230KV CKT Z
17SP	16ALL	4	TO->FROM	G17_109	MERRCRT4 230.00 - WISHEK 230KV CKT 1	254.4	0.07389	100.4984	BUFFALO - JAMESTOWN 345KV CKT 1
17SP	16ALL	4	TO->FROM	G17_109	MERRCRT4 230.00 - WISHEK 230KV CKT 1	254.4	0.06866	100.2437	ROSEAU - ROSEAUM 2 500.00 500KV CKT 1
17SP	16ALL	4	TO->FROM	G17_109	MERRCRT4 230.00 - WISHEK 230KV CKT 1	254.4	0.06866	100.2437	ROSEAU - ROSEAUM 2 500.00 500KV CKT 1
17SP	16ALL	4	TO->FROM	G17_109	MERRCRT4 230.00 - WISHEK 230KV CKT 1	254.4	0.06866	100.8727	RIEL - ROSEAU 500KV CKT 1

SEASON	GROUP	SCENARIO	DIRECTION	SOURCE	MONITORED ELEMENT	RATE (MVA)	TDF	CONTINGENCY LOADING %	CONTINGENCY
17SP	16ALL	4	TO->FROM	G17_109	OGALLALA - SIDNEY 230KV CKT 1	319.6	0.04571	131.3254	KEYSTONE - SIDNEY1-LNX3345.00 345KV CKT 1
17SP	16ALL	4	TO->FROM	G17_109	OGALLALA - SIDNEY 230KV CKT 1	319.6	0.04571	131.3254	SIDNEY - SIDNEY1-LNX3345.00 345KV CKT Z
25SP	16ALL	4	TO->FROM	G17_109	OGALLALA - SIDNEY 230KV CKT 1	319.9	0.04358	127.6611	SIDNEY - SIDNEY1-LNX3345.00 345KV CKT Z
25SP	16ALL	4	TO->FROM	G17_109	OGALLALA - SIDNEY 230KV CKT 1	319.9	0.04358	127.6611	KEYSTONE - SIDNEY1-LNX3345.00 345KV CKT 1
20SP	16ALL	4	TO->FROM	G17_109	OGALLALA - SIDNEY 230KV CKT 1	319.9	0.04327	126.7721	SIDNEY - SIDNEY1-LNX3345.00 345KV CKT Z
20SP	16ALL	4	TO->FROM	G17_109	OGALLALA - SIDNEY 230KV CKT 1	319.9	0.04327	126.7721	KEYSTONE - SIDNEY1-LNX3345.00 345KV CKT 1
16WP	16ALL	4	TO->FROM	G17_109	OGALLALA - SIDNEY 230KV CKT 1	319.5	0.04198	123.0898	SIDNEY - SIDNEY1-LNX3345.00 345KV CKT Z
16WP	16ALL	4	TO->FROM	G17_109	OGALLALA - SIDNEY 230KV CKT 1	319.5	0.04198	123.0898	KEYSTONE - SIDNEY1-LNX3345.00 345KV CKT 1
17G	16ALL	4	TO->FROM	G17_109	OGALLALA - SIDNEY 230KV CKT 1	319.5	0.04068	135.8898	SIDNEY - SIDNEY1-LNX3345.00 345KV CKT Z
17G	16ALL	4	TO->FROM	G17_109	OGALLALA - SIDNEY 230KV CKT 1	319.5	0.04068	135.8898	KEYSTONE - SIDNEY1-LNX3345.00 345KV CKT 1
20WP	16ALL	4	TO->FROM	G17_109	OGALLALA - SIDNEY 230KV CKT 1	319.7	0.04067	115.3281	SIDNEY - SIDNEY1-LNX3345.00 345KV CKT Z
20WP	16ALL	4	TO->FROM	G17_109	OGALLALA - SIDNEY 230KV CKT 1	319.7	0.04067	115.3281	KEYSTONE - SIDNEY1-LNX3345.00 345KV CKT 1
17SP	16ALL	4	FROM->TO	G17_109	PRAIRIE - WINGER 230KV CKT 1	399.8	0.04631	107.4277	FORBES - ROSEAU 500KV CKT 1
17SP	16ALL	4	FROM->TO	G17_109	PRAIRIE - WINGER 230KV CKT 1	399.8	0.04631	108.8784	ROSEAU - ROSEAUM 2 500.00 500KV CKT 1
17SP	16ALL	4	FROM->TO	G17_109	PRAIRIE - WINGER 230KV CKT 1	399.8	0.04631	108.8784	ROSEAU - ROSEAUM 2 500.00 500KV CKT 1
17SP	16ALL	4	FROM->TO	G17_109	PRAIRIE - WINGER 230KV CKT 1	399.8	0.04631	110.3292	RIEL - ROSEAU 500KV CKT 1
20SP	16ALL	4	FROM->TO	G17_109	PRAIRIE - WINGER 230KV CKT 1	399.9	0.04607	107.7549	FORBES - ROSEAU 500KV CKT 1
20SP	16ALL	4	FROM->TO	G17_109	PRAIRIE - WINGER 230KV CKT 1	399.9	0.04607	109.2303	ROSEAU - ROSEAUM 2 500.00 500KV CKT 1
20SP	16ALL	4	FROM->TO	G17_109	PRAIRIE - WINGER 230KV CKT 1	399.9	0.04607	109.2303	ROSEAU - ROSEAUM 2 500.00 500KV CKT 1
20SP	16ALL	4	FROM->TO	G17_109	PRAIRIE - WINGER 230KV CKT 1	399.9	0.04607	110.6807	RIEL - ROSEAU 500KV CKT 1
25SP	16ALL	4	FROM->TO	G17_109	PRAIRIE - WINGER 230KV CKT 1	399.9	0.04414	103.3328	FORBES - ROSEAU 500KV CKT 1
25SP	16ALL	4	FROM->TO	G17_109	PRAIRIE - WINGER 230KV CKT 1	399.9	0.04414	104.5581	ROSEAU - ROSEAUM 2 500.00 500KV CKT 1
25SP	16ALL	4	FROM->TO	G17_109	PRAIRIE - WINGER 230KV CKT 1	399.9	0.04414	104.5581	ROSEAU - ROSEAUM 2 500.00 500KV CKT 1
25SP	16ALL	4	FROM->TO	G17_109	PRAIRIE - WINGER 230KV CKT 1	399.9	0.04414	105.7584	RIEL - ROSEAU 500KV CKT 1
20L	16NR	5	TO->FROM	G17_109	BEULAH - COYOTE 115KV CKT 1	102	0.04296	182.3012	CENTER - COYOTE 345KV CKT 1
17G	16NR	5	TO->FROM	G17_109	BEULAH - COYOTE 115KV CKT 1	101.9	0.04197	311.5117	CENTER - COYOTE 345KV CKT 1
16WP	00NR	5	TO->FROM	G17_109	BEULAH - COYOTE 115KV CKT 1	122.9	0.04095	268.7583	CENTER - COYOTE 345KV CKT 1
17SP	00NR	5	TO->FROM	G17_109	BEULAH - COYOTE 115KV CKT 1	101.9	0.04093	275.3656	CENTER - COYOTE 345KV CKT 1
20SP	00NR	5	TO->FROM	G17_109	BEULAH - COYOTE 115KV CKT 1	101.9	0.04087	228.4381	CENTER - COYOTE 345KV CKT 1
25SP	00NR	5	TO->FROM	G17_109	BEULAH - COYOTE 115KV CKT 1	101.9	0.04085	243.4465	CENTER - COYOTE 345KV CKT 1
20WP	00NR	5	TO->FROM	G17_109	BEULAH - COYOTE 115KV CKT 1	122.9	0.0406	258.0895	CENTER - COYOTE 345KV CKT 1
25SP	00NR	5	TO->FROM	G17_109	BUFFALO - JAMESTOWN 345KV CKT 1	704.9	0.04939	113.1089	CENTER - CNTSHNT3 345.00 345KV CKT Z1
25SP	00NR	5	TO->FROM	G17_109	BUFFALO - JAMESTOWN 345KV CKT 1	704.9	0.04939	113.1089	CNTSHNT3 345.00 - PRAIRIE3 345.00 345KV CKT 1
20SP	00NR	5	TO->FROM	G17_109	BUFFALO - JAMESTOWN 345KV CKT 1	704.7	0.04929	109.3476	CENTER - CNTSHNT3 345.00 345KV CKT Z1
20SP	00NR	5	TO->FROM	G17_109	BUFFALO - JAMESTOWN 345KV CKT 1	704.7	0.04929	109.3476	CNTSHNT3 345.00 - PRAIRIE3 345.00 345KV CKT 1
17SP	00NR	5	TO->FROM	G17_109	BUFFALO - JAMESTOWN 345KV CKT 1	705	0.049	107.3163	CNTSHNT3 345.00 - PRAIRIE3 345.00 345KV CKT 1
17SP	00NR	5	TO->FROM	G17_109	BUFFALO - JAMESTOWN 345KV CKT 1	705	0.049	107.3163	CENTER - CNTSHNT3 345.00 345KV CKT Z1
25SP	00NR	5	TO->FROM	G17_109	BUFFALO - JAMESTOWN 345KV CKT 1	704.9	0.04892	102.3201	P12:345:UMZB:# 103 #: BD IN SD. LOSS OF LINE
25SP	00NR	5	TO->FROM	G17_109	BUFFALO - JAMESTOWN 345KV CKT 1	704.9	0.04873	102.425	FTTHOM1-LNX3345.00 - G16-017-TAP 345.00 345KV CKT 1
25SP	00NR	5	TO->FROM	G17_109	BUFFALO - JAMESTOWN 345KV CKT 1	704.9	0.04873	102.425	FT THOMPSON - FTTHOM1-LNX3345.00 345KV CKT Z
25SP	00NR	5	TO->FROM	G17_109	BUFFALO - JAMESTOWN 345KV CKT 1	704.9	0.04798	102.3484	P12:345:UMZB:# 109 #: LOS GRT IN ND. LOS GRT
25SP	00NR	5	TO->FROM	G17_109	BUFFALO - JAMESTOWN 345KV CKT 1	704.9	0.04798	102.3484	LELAND OLDS - LELAND1-LNX3345.00 345KV CKT Z
17G	16NR	5	TO->FROM	G17_109	BUFFALO - JAMESTOWN 345KV CKT 1	703.9	0.04619	106.8875	CNTSHNT3 345.00 - PRAIRIE3 345.00 345KV CKT 1
17G	16NR	5	TO->FROM	G17_109	BUFFALO - JAMESTOWN 345KV CKT 1	703.9	0.04619	106.8875	CENTER - CNTSHNT3 345.00 345KV CKT Z1
20SP	00NR	5	TO->FROM	G17_109	BUFFALO - JAMESTOWN 345KV CKT 1	704.7	0.04579	112.8782	FORBES - ROSEAU 500KV CKT 1
20SP	00NR	5	TO->FROM	G17_109	BUFFALO - JAMESTOWN 345KV CKT 1	704.7	0.04579	113.3181	ROSEAU - ROSEAUM 2 500.00 500KV CKT 1
20SP	00NR	5	TO->FROM	G17_109	BUFFALO - JAMESTOWN 345KV CKT 1	704.7	0.04579	113.3181	ROSEAU - ROSEAUM 2 500.00 500KV CKT 1
20SP	00NR	5	TO->FROM	G17_109	BUFFALO - JAMESTOWN 345KV CKT 1	704.7	0.04579	113.7438	RIEL - ROSEAU 500KV CKT 1
25SP	00NR	5	TO->FROM	G17_109	BUFFALO - JAMESTOWN 345KV CKT 1	704.9	0.04578	114.4772	FORBES - ROSEAU 500KV CKT 1
25SP	00NR	5	TO->FROM	G17_109	BUFFALO - JAMESTOWN 345KV CKT 1	704.9	0.04578	114.8602	ROSEAU - ROSEAUM 2 500.00 500KV CKT 1
25SP	00NR	5	TO->FROM	G17_109	BUFFALO - JAMESTOWN 345KV CKT 1	704.9	0.04578	114.8602	ROSEAU - ROSEAUM 2 500.00 500KV CKT 1
25SP	00NR	5	TO->FROM	G17_109	BUFFALO - JAMESTOWN 345KV CKT 1	704.9	0.04578	115.229	RIEL - ROSEAU 500KV CKT 1
17SP	00NR	5	TO->FROM	G17_109	BUFFALO - JAMESTOWN 345KV CKT 1	705	0.04553	111.1304	FORBES - ROSEAU 500KV CKT 1
17SP	00NR	5	TO->FROM	G17_109	BUFFALO - JAMESTOWN 345KV CKT 1	705	0.04553	111.5418	ROSEAU - ROSEAUM 2 500.00 500KV CKT 1
17SP	00NR	5	TO->FROM	G17_109	BUFFALO - JAMESTOWN 345KV CKT 1	705	0.04553	111.5418	ROSEAU - ROSEAUM 2 500.00 500KV CKT 1

SEASON	GROUP	SCENARIO	DIRECTION	SOURCE	MONITORED ELEMENT	RATE (MVA)	TDF	CONTINGENCY LOADING %	CONTINGENCY
17SP	00NR	5	TO->FROM	G17_109	BUFFALO - JAMESTOWN 345KV CKT 1	705	0.04553	111.9673	RIEL - ROSEAU 500KV CKT 1
25SP	00NR	5	TO->FROM	G17_109	BUFFALO - JAMESTOWN 345KV CKT 1	704.9	0.04529	102.1837	SQUARE BUTTE - STANTON 230KV CKT 1
25SP	00NR	5	TO->FROM	G17_109	BUFFALO - JAMESTOWN 345KV CKT 1	704.9	0.04525	102.2812	G09_001IST 345.00 - WATERTOWN 345KV CKT 1
25SP	00NR	5	TO->FROM	G17_109	BUFFALO - JAMESTOWN 345KV CKT 1	704.9	0.04513	104.0916	FARGO - SHEYNNE 230KV CKT 1
20SP	00NR	5	TO->FROM	G17_109	BUFFALO - JAMESTOWN 345KV CKT 1	704.7	0.04508	101.593	FARGO - SHEYNNE 230KV CKT 1
25SP	00NR	5	TO->FROM	G17_109	BUFFALO - JAMESTOWN 345KV CKT 1	704.9	0.04486	102.7458	FARGO - JAMES TOWN 230KV CKT 1
25SP	00NR	5	TO->FROM	G17_109	BUFFALO - JAMESTOWN 345KV CKT 1	704.9	0.04483	102.1486	PRAIRIE - WINGER 230KV CKT 1
25SP	00NR	5	TO->FROM	G17_109	BUFFALO - JAMESTOWN 345KV CKT 1	704.9	0.04481	102.6159	FARGO - JAMES TOWN 230KV CKT 2
25SP	00NR	5	TO->FROM	G17_109	BUFFALO - JAMESTOWN 345KV CKT 1	704.9	0.04351	102.1171	GRPRAR1-LNX3345.00 - HOLT.CO3 345.00 345KV CKT 1
25SP	00NR	5	TO->FROM	G17_109	BUFFALO - JAMESTOWN 345KV CKT 1	704.9	0.04351	102.1596	GRPRAR1-LNX3345.00 - YANKTON 345KV CKT Z
17G	16NR	5	TO->FROM	G17_109	BUFFALO - JAMESTOWN 345KV CKT 1	703.9	0.04285	107.5028	FORBES - ROSEAU 500KV CKT 1
17G	16NR	5	TO->FROM	G17_109	BUFFALO - JAMESTOWN 345KV CKT 1	703.9	0.04285	107.7869	ROSEAU - ROSEAUM 2 500.00 500KV CKT 1
17G	16NR	5	TO->FROM	G17_109	BUFFALO - JAMESTOWN 345KV CKT 1	703.9	0.04285	107.7869	ROSEAU - ROSEAUM 2 500.00 500KV CKT 1
17G	16NR	5	TO->FROM	G17_109	BUFFALO - JAMESTOWN 345KV CKT 1	703.9	0.04285	108.071	RIEL - ROSEAU 500KV CKT 1
25SP	00NR	5	TO->FROM	G17_109	BUFFALO - JAMESTOWN 345KV CKT 1	704.9	0.04179	105.1032	HANKINSON - WAHPETON 230KV CKT 1
20SP	00NR	5	TO->FROM	G17_109	BUFFALO - JAMESTOWN 345KV CKT 1	704.7	0.04173	102.1929	HANKINSON - WAHPETON 230KV CKT 1
25SP	00NR	5	TO->FROM	G17_109	ELLENDLMVP4 230.00 - J316_SUB 230.00 230KV CKT 1	342.7	0.03427	111.0786	ELLENDLMVP4 230.00 - MERRCRT4 230.00 230KV CKT 1
20SP	00NR	5	TO->FROM	G17_109	ELLENDLMVP4 230.00 - J316_SUB 230.00 230KV CKT 1	342.2	0.03419	110.1522	ELLENDLMVP4 230.00 - MERRCRT4 230.00 230KV CKT 1
16WP	00NR	5	TO->FROM	G17_109	ELLENDLMVP4 230.00 - J316_SUB 230.00 230KV CKT 1	340.7	0.03406	117.2583	ELLENDLMVP4 230.00 - MERRCRT4 230.00 230KV CKT 1
17SP	00NR	5	TO->FROM	G17_109	ELLENDLMVP4 230.00 - J316_SUB 230.00 230KV CKT 1	341.7	0.03404	131.8387	ELLENDLMVP4 230.00 - MERRCRT4 230.00 230KV CKT 1
17G	16NR	5	TO->FROM	G17_109	ELLENDLMVP4 230.00 - J316_SUB 230.00 230KV CKT 1	340.6	0.0305	136.101	ELLENDLMVP4 230.00 - MERRCRT4 230.00 230KV CKT 1
17SP	00NR	5	TO->FROM	G17_109	ELLENDLMVP4 230.00 - MERRCRT4 230.00 230KV CKT 1	382.5	0.03334	111.5213	ELLENDLMVP4 230.00 - J316_SUB 230.00 230KV CKT 1
17G	16NR	5	TO->FROM	G17_109	ELLENDLMVP4 230.00 - MERRCRT4 230.00 230KV CKT 1	382.4	0.02988	114.922	ELLENDLMVP4 230.00 - J316_SUB 230.00 230KV CKT 1
17SP	00NR	5	FROM->TO	G17_109	LEWIS & CLARK - RICHLAND 115KV CKT 1	101	0.28019	107.4859	BELFIELD - MEDORA 230KV CKT 1
17SP	00NR	5	FROM->TO	G17_109	LEWIS & CLARK - RICHLAND 115KV CKT 1	101	0.28019	109.5651	BEAVERHILL4 230.00 - DAWSON CREEK 230KV CKT 1
17SP	00NR	5	FROM->TO	G17_109	LEWIS & CLARK - RICHLAND 115KV CKT 1	101	0.28019	111.3473	BEAVERHILL4 230.00 - MEDORA 230KV CKT 1
17G	16NR	5	FROM->TO	G17_109	LEWIS & CLARK - RICHLAND 115KV CKT 1	100.9	0.27787	100.0182	BELFIELD - MEDORA 230KV CKT 1
17G	16NR	5	FROM->TO	G17_109	LEWIS & CLARK - RICHLAND 115KV CKT 1	100.9	0.27787	103.7843	BEAVERHILL4 230.00 - MEDORA 230KV CKT 1
17SP	00NR	5	FROM->TO	G17_109	LEWIS & CLARK - RICHLAND 115KV CKT 1	101	0.17893	105.0075	CULBERTSN E7115.00 - WILISTON 115KV CKT 1
20L	16NR	6	TO->FROM	G17_109	BEULAH - COYOTE 115KV CKT 1	102	0.04296	182.3012	CENTER - COYOTE 345KV CKT 1
17G	16NR	6	TO->FROM	G17_109	BEULAH - COYOTE 115KV CKT 1	101.9	0.04197	311.5117	CENTER - COYOTE 345KV CKT 1
16WP	00NR	6	TO->FROM	G17_109	BEULAH - COYOTE 115KV CKT 1	122.9	0.04095	268.7583	CENTER - COYOTE 345KV CKT 1
17SP	00NR	6	TO->FROM	G17_109	BEULAH - COYOTE 115KV CKT 1	101.9	0.04093	275.3656	CENTER - COYOTE 345KV CKT 1
20SP	00NR	6	TO->FROM	G17_109	BEULAH - COYOTE 115KV CKT 1	101.9	0.04087	228.4381	CENTER - COYOTE 345KV CKT 1
25SP	00NR	6	TO->FROM	G17_109	BEULAH - COYOTE 115KV CKT 1	101.9	0.04085	243.4465	CENTER - COYOTE 345KV CKT 1
20WP	00NR	6	TO->FROM	G17_109	BEULAH - COYOTE 115KV CKT 1	122.9	0.0406	258.0895	CENTER - COYOTE 345KV CKT 1
25SP	00NR	6	TO->FROM	G17_109	BUFFALO - JAMESTOWN 345KV CKT 1	704.9	0.04939	113.1089	CNTSHNT3 345.00 - PRAIRIE3 345.00 345KV CKT 1
25SP	00NR	6	TO->FROM	G17_109	BUFFALO - JAMESTOWN 345KV CKT 1	704.9	0.04939	113.1089	CENTER - CNTSHNT3 345.00 345KV CKT Z1
20SP	00NR	6	TO->FROM	G17_109	BUFFALO - JAMESTOWN 345KV CKT 1	704.7	0.04929	109.3476	CNTSHNT3 345.00 - PRAIRIE3 345.00 345KV CKT 1
20SP	00NR	6	TO->FROM	G17_109	BUFFALO - JAMESTOWN 345KV CKT 1	704.7	0.04929	109.3476	CENTER - CNTSHNT3 345.00 345KV CKT Z1
17SP	00NR	6	TO->FROM	G17_109	BUFFALO - JAMESTOWN 345KV CKT 1	705	0.049	107.3163	CENTER - CNTSHNT3 345.00 345KV CKT Z1
17SP	00NR	6	TO->FROM	G17_109	BUFFALO - JAMESTOWN 345KV CKT 1	705	0.049	107.3163	CNTSHNT3 345.00 - PRAIRIE3 345.00 345KV CKT 1
25SP	00NR	6	TO->FROM	G17_109	BUFFALO - JAMESTOWN 345KV CKT 1	704.9	0.04892	102.3201	P12:345:UMZB:# 103 #: BD IN SD. LOSS OF LINE
25SP	00NR	6	TO->FROM	G17_109	BUFFALO - JAMESTOWN 345KV CKT 1	704.9	0.04873	102.425	FTTHOM1-LNX3345.00 - G16-017-TAP 345.00 345KV CKT 1
25SP	00NR	6	TO->FROM	G17_109	BUFFALO - JAMESTOWN 345KV CKT 1	704.9	0.04873	102.425	FT THOMPSON - FTTHOM1-LNX3345.00 345KV CKT Z
25SP	00NR	6	TO->FROM	G17_109	BUFFALO - JAMESTOWN 345KV CKT 1	704.9	0.04798	102.3484	P12:345:UMZB:# 109 #: LOS GRT IN ND. LOS GRT
25SP	00NR	6	TO->FROM	G17_109	BUFFALO - JAMESTOWN 345KV CKT 1	704.9	0.04798	102.3484	LELAND OLDS - LELAND1-LNX3345.00 345KV CKT Z
17G	16NR	6	TO->FROM	G17_109	BUFFALO - JAMESTOWN 345KV CKT 1	703.9	0.04619	106.8875	CENTER - CNTSHNT3 345.00 345KV CKT Z1
17G	16NR	6	TO->FROM	G17_109	BUFFALO - JAMESTOWN 345KV CKT 1	703.9	0.04619	106.8875	CNTSHNT3 345.00 - PRAIRIE3 345.00 345KV CKT 1
20SP	00NR	6	TO->FROM	G17_109	BUFFALO - JAMESTOWN 345KV CKT 1	704.7	0.04579	112.8782	FORBES - ROSEAU 500KV CKT 1
20SP	00NR	6	TO->FROM	G17_109	BUFFALO - JAMESTOWN 345KV CKT 1	704.7	0.04579	113.3181	ROSEAU - ROSEAUM 2 500.00 500KV CKT 1
20SP	00NR	6	TO->FROM	G17_109	BUFFALO - JAMESTOWN 345KV CKT 1	704.7	0.04579	113.3181	ROSEAU - ROSEAUM 2 500.00 500KV CKT 1
20SP	00NR	6	TO->FROM	G17_109	BUFFALO - JAMESTOWN 345KV CKT 1	704.7	0.04579	113.7438	RIEL - ROSEAU 500KV CKT 1
25SP	00NR	6	TO->FROM	G17_109	BUFFALO - JAMESTOWN 345KV CKT 1	704.9	0.04578	114.4772	FORBES - ROSEAU 500KV CKT 1
25SP	00NR	6	TO->FROM	G17_109	BUFFALO - JAMESTOWN 345KV CKT 1	704.9	0.04578	114.8602	ROSEAU - ROSEAUM 2 500.00 500KV CKT 1

SEASON	GROUP	SCENARIO	DIRECTION	SOURCE	MONITORED ELEMENT	RATE (MVA)	TDF	CONTINGENCY LOADING %	CONTINGENCY
25SP	00NR	6	TO->FROM	G17_109	BUFFALO - JAMESTOWN 345KV CKT 1	704.9	0.04578	114.8602	ROSEAU - ROSEAUM 2 500.00 500KV CKT 1
25SP	00NR	6	TO->FROM	G17_109	BUFFALO - JAMESTOWN 345KV CKT 1	704.9	0.04578	115.229	RIEL - ROSEAU 500KV CKT 1
17SP	00NR	6	TO->FROM	G17_109	BUFFALO - JAMESTOWN 345KV CKT 1	705	0.04553	111.1304	FORBES - ROSEAU 500KV CKT 1
17SP	00NR	6	TO->FROM	G17_109	BUFFALO - JAMESTOWN 345KV CKT 1	705	0.04553	111.5418	ROSEAU - ROSEAUM 2 500.00 500KV CKT 1
17SP	00NR	6	TO->FROM	G17_109	BUFFALO - JAMESTOWN 345KV CKT 1	705	0.04553	111.5418	ROSEAU - ROSEAUM 2 500.00 500KV CKT 1
17SP	00NR	6	TO->FROM	G17_109	BUFFALO - JAMESTOWN 345KV CKT 1	705	0.04553	111.9673	RIEL - ROSEAU 500KV CKT 1
25SP	00NR	6	TO->FROM	G17_109	BUFFALO - JAMESTOWN 345KV CKT 1	704.9	0.04529	102.1837	SQUARE BUTTE - STANTON 230KV CKT 1
25SP	00NR	6	TO->FROM	G17_109	BUFFALO - JAMESTOWN 345KV CKT 1	704.9	0.04525	102.2812	G09_001IST 345.00 - WATERTOWN 345KV CKT 1
25SP	00NR	6	TO->FROM	G17_109	BUFFALO - JAMESTOWN 345KV CKT 1	704.9	0.04513	104.0916	FARGO - SHEYNNE 230KV CKT 1
20SP	00NR	6	TO->FROM	G17_109	BUFFALO - JAMESTOWN 345KV CKT 1	704.7	0.04508	101.593	FARGO - SHEYNNE 230KV CKT 1
25SP	00NR	6	TO->FROM	G17_109	BUFFALO - JAMESTOWN 345KV CKT 1	704.9	0.04486	102.7458	FARGO - JAMES TOWN 230KV CKT 1
25SP	00NR	6	TO->FROM	G17_109	BUFFALO - JAMESTOWN 345KV CKT 1	704.9	0.04483	102.1486	PRAIRIE - WINGER 230KV CKT 1
25SP	00NR	6	TO->FROM	G17_109	BUFFALO - JAMESTOWN 345KV CKT 1	704.9	0.04481	102.6159	FARGO - JAMES TOWN 230KV CKT 2
25SP	00NR	6	TO->FROM	G17_109	BUFFALO - JAMESTOWN 345KV CKT 1	704.9	0.04351	102.1171	GRPRAR1-LNX3345.00 - HOLT.CO3 345.00 345KV CKT 1
25SP	00NR	6	TO->FROM	G17_109	BUFFALO - JAMESTOWN 345KV CKT 1	704.9	0.04351	102.1596	GRPRAR1-LNX3345.00 - YANKTON 345KV CKT Z
17G	16NR	6	TO->FROM	G17_109	BUFFALO - JAMESTOWN 345KV CKT 1	703.9	0.04285	107.5028	FORBES - ROSEAU 500KV CKT 1
17G	16NR	6	TO->FROM	G17_109	BUFFALO - JAMESTOWN 345KV CKT 1	703.9	0.04285	107.7869	ROSEAU - ROSEAUM 2 500.00 500KV CKT 1
17G	16NR	6	TO->FROM	G17_109	BUFFALO - JAMESTOWN 345KV CKT 1	703.9	0.04285	107.7869	ROSEAU - ROSEAUM 2 500.00 500KV CKT 1
17G	16NR	6	TO->FROM	G17_109	BUFFALO - JAMESTOWN 345KV CKT 1	703.9	0.04285	108.071	RIEL - ROSEAU 500KV CKT 1
25SP	00NR	6	TO->FROM	G17_109	BUFFALO - JAMESTOWN 345KV CKT 1	704.9	0.04179	105.1032	HANKINSON - WAHPETON 230KV CKT 1
20SP	00NR	6	TO->FROM	G17_109	BUFFALO - JAMESTOWN 345KV CKT 1	704.7	0.04173	102.1929	HANKINSON - WAHPETON 230KV CKT 1
25SP	00NR	6	TO->FROM	G17_109	ELLENDLMVP4 230.00 - J316_SUB 230.00 230KV CKT 1	342.7	0.03427	111.0786	ELLENDLMVP4 230.00 - MERRCRT4 230.00 230KV CKT 1
20SP	00NR	6	TO->FROM	G17_109	ELLENDLMVP4 230.00 - J316_SUB 230.00 230KV CKT 1	342.2	0.03419	110.1522	ELLENDLMVP4 230.00 - MERRCRT4 230.00 230KV CKT 1
16WP	00NR	6	TO->FROM	G17_109	ELLENDLMVP4 230.00 - J316_SUB 230.00 230KV CKT 1	340.7	0.03406	117.2583	ELLENDLMVP4 230.00 - MERRCRT4 230.00 230KV CKT 1
17SP	00NR	6	TO->FROM	G17_109	ELLENDLMVP4 230.00 - J316_SUB 230.00 230KV CKT 1	341.7	0.03404	131.8387	ELLENDLMVP4 230.00 - MERRCRT4 230.00 230KV CKT 1
17G	16NR	6	TO->FROM	G17_109	ELLENDLMVP4 230.00 - J316_SUB 230.00 230KV CKT 1	340.6	0.0305	136.101	ELLENDLMVP4 230.00 - MERRCRT4 230.00 230KV CKT 1
17SP	00NR	6	TO->FROM	G17_109	ELLENDLMVP4 230.00 - MERRCRT4 230.00 230KV CKT 1	382.5	0.03334	111.5213	ELLENDLMVP4 230.00 - J316_SUB 230.00 230KV CKT 1
17G	16NR	6	TO->FROM	G17_109	ELLENDLMVP4 230.00 - MERRCRT4 230.00 230KV CKT 1	382.4	0.02988	114.922	ELLENDLMVP4 230.00 - J316_SUB 230.00 230KV CKT 1
17SP	00NR	6	FROM->TO	G17_109	LEWIS & CLARK - RICHLAND 115KV CKT 1	101	0.28019	107.4859	BELFIELD - MEDORA 230KV CKT 1
17SP	00NR	6	FROM->TO	G17_109	LEWIS & CLARK - RICHLAND 115KV CKT 1	101	0.28019	109.5651	BEAVERHILL4 230.00 - DAWSON CREEK 230KV CKT 1
17SP	00NR	6	FROM->TO	G17_109	LEWIS & CLARK - RICHLAND 115KV CKT 1	101	0.28019	111.3473	BEAVERHILL4 230.00 - MEDORA 230KV CKT 1
17G	16NR	6	FROM->TO	G17_109	LEWIS & CLARK - RICHLAND 115KV CKT 1	100.9	0.27787	100.0182	BELFIELD - MEDORA 230KV CKT 1
17G	16NR	6	FROM->TO	G17_109	LEWIS & CLARK - RICHLAND 115KV CKT 1	100.9	0.27787	103.7843	BEAVERHILL4 230.00 - MEDORA 230KV CKT 1
17SP	00NR	6	FROM->TO	G17_109	LEWIS & CLARK - RICHLAND 115KV CKT 1	101	0.17893	105.0075	CULBERTSN E7115.00 - WILISTON 115KV CKT 1
20L	16NR	7	TO->FROM	G17_109	BEULAH - COYOTE 115KV CKT 1	102	0.04175	180.353	CENTER - COYOTE 345KV CKT 1
17G	16NR	7	TO->FROM	G17_109	BEULAH - COYOTE 115KV CKT 1	101.9	0.04072	307.9788	CENTER - COYOTE 345KV CKT 1
20SP	00NR	7	TO->FROM	G17_109	BEULAH - COYOTE 115KV CKT 1	101.9	0.0398	226.0412	CENTER - COYOTE 345KV CKT 1
25SP	00NR	7	TO->FROM	G17_109	BEULAH - COYOTE 115KV CKT 1	101.9	0.03979	240.9547	CENTER - COYOTE 345KV CKT 1
16WP	00NR	7	TO->FROM	G17_109	BEULAH - COYOTE 115KV CKT 1	122.9	0.03978	265.6059	CENTER - COYOTE 345KV CKT 1
17SP	00NR	7	TO->FROM	G17_109	BEULAH - COYOTE 115KV CKT 1	102	0.03977	272.1827	CENTER - COYOTE 345KV CKT 1
20WP	00NR	7	TO->FROM	G17_109	BEULAH - COYOTE 115KV CKT 1	122.9	0.03954	255.1284	CENTER - COYOTE 345KV CKT 1
25SP	00NR	7	TO->FROM	G17_109	BUFFALO - JAMESTOWN 345KV CKT 1	704.9	0.04969	113.1225	CNTSHNT3 345.00 - PRAIRIE3 345.00 345KV CKT 1
25SP	00NR	7	TO->FROM	G17_109	BUFFALO - JAMESTOWN 345KV CKT 1	704.9	0.04969	113.1225	CENTER - CNTSHNT3 345.00 345KV CKT Z1
20SP	00NR	7	TO->FROM	G17_109	BUFFALO - JAMESTOWN 345KV CKT 1	704.7	0.04959	109.3471	CENTER - CNTSHNT3 345.00 345KV CKT Z1
20SP	00NR	7	TO->FROM	G17_109	BUFFALO - JAMESTOWN 345KV CKT 1	704.7	0.04959	109.3471	CNTSHNT3 345.00 - PRAIRIE3 345.00 345KV CKT 1
17SP	00NR	7	TO->FROM	G17_109	BUFFALO - JAMESTOWN 345KV CKT 1	705	0.04933	107.3171	CNTSHNT3 345.00 - PRAIRIE3 345.00 345KV CKT 1
17SP	00NR	7	TO->FROM	G17_109	BUFFALO - JAMESTOWN 345KV CKT 1	705	0.04933	107.3171	CENTER - CNTSHNT3 345.00 345KV CKT Z1
25SP	00NR	7	TO->FROM	G17_109	BUFFALO - JAMESTOWN 345KV CKT 1	704.9	0.04915	102.3022	P12:345:UMZB:# 103 #: BD IN SD. LOSS OF LINE
25SP	00NR	7	TO->FROM	G17_109	BUFFALO - JAMESTOWN 345KV CKT 1	704.9	0.04895	102.4066	FT THOMPSON - FTTHOM1-LNX3345.00 345KV CKT Z
25SP	00NR	7	TO->FROM	G17_109	BUFFALO - JAMESTOWN 345KV CKT 1	704.9	0.04895	102.4066	FTTHOM1-LNX3345.00 - G16-017-TAP 345.00 345KV CKT 1
25SP	00NR	7	TO->FROM	G17_109	BUFFALO - JAMESTOWN 345KV CKT 1	704.9	0.04821	102.3304	P12:345:UMZB:# 109 #: LOS GRT IN ND. LOS GRT
25SP	00NR	7	TO->FROM	G17_109	BUFFALO - JAMESTOWN 345KV CKT 1	704.9	0.04821	102.3304	LELAND OLDS - LELAND1-LNX3345.00 345KV CKT Z
17G	16NR	7	TO->FROM	G17_109	BUFFALO - JAMESTOWN 345KV CKT 1	703.9	0.04656	106.9043	CENTER - CNTSHNT3 345.00 345KV CKT Z1
17G	16NR	7	TO->FROM	G17_109	BUFFALO - JAMESTOWN 345KV CKT 1	703.9	0.04656	106.9043	CNTSHNT3 345.00 - PRAIRIE3 345.00 345KV CKT 1
20SP	00NR	7	TO->FROM	G17_109	BUFFALO - JAMESTOWN 345KV CKT 1	704.7	0.04602	112.8461	FORBES - ROSEAU 500KV CKT 1

SEASON	GROUP	SCENARIO	DIRECTION	SOURCE	MONITORED ELEMENT	RATE (MVA)	TDF	CONTINGENCY LOADING %	CONTINGENCY
20SP	00NR	7	TO->FROM	G17_109	BUFFALO - JAMESTOWN 345KV CKT 1	704.7	0.04602	113.286	ROSEAU - ROSEAUM 2 500.00 500KV CKT 1
20SP	00NR	7	TO->FROM	G17_109	BUFFALO - JAMESTOWN 345KV CKT 1	704.7	0.04602	113.286	ROSEAU - ROSEAUM 2 500.00 500KV CKT 1
20SP	00NR	7	TO->FROM	G17_109	BUFFALO - JAMESTOWN 345KV CKT 1	704.7	0.04602	113.7259	RIEL - ROSEAU 500KV CKT 1
25SP	00NR	7	TO->FROM	G17_109	BUFFALO - JAMESTOWN 345KV CKT 1	704.9	0.04601	114.4451	FORBES - ROSEAU 500KV CKT 1
25SP	00NR	7	TO->FROM	G17_109	BUFFALO - JAMESTOWN 345KV CKT 1	704.9	0.04601	114.8281	ROSEAU - ROSEAUM 2 500.00 500KV CKT 1
25SP	00NR	7	TO->FROM	G17_109	BUFFALO - JAMESTOWN 345KV CKT 1	704.9	0.04601	114.8281	ROSEAU - ROSEAUM 2 500.00 500KV CKT 1
25SP	00NR	7	TO->FROM	G17_109	BUFFALO - JAMESTOWN 345KV CKT 1	704.9	0.04601	115.2111	RIEL - ROSEAU 500KV CKT 1
17SP	00NR	7	TO->FROM	G17_109	BUFFALO - JAMESTOWN 345KV CKT 1	705	0.04578	111.085	FORBES - ROSEAU 500KV CKT 1
17SP	00NR	7	TO->FROM	G17_109	BUFFALO - JAMESTOWN 345KV CKT 1	705	0.04578	111.5106	ROSEAU - ROSEAUM 2 500.00 500KV CKT 1
17SP	00NR	7	TO->FROM	G17_109	BUFFALO - JAMESTOWN 345KV CKT 1	705	0.04578	111.5106	ROSEAU - ROSEAUM 2 500.00 500KV CKT 1
17SP	00NR	7	TO->FROM	G17_109	BUFFALO - JAMESTOWN 345KV CKT 1	705	0.04578	111.9361	RIEL - ROSEAU 500KV CKT 1
25SP	00NR	7	TO->FROM	G17_109	BUFFALO - JAMESTOWN 345KV CKT 1	704.9	0.04567	102.1726	SQUARE BUTTE - STANTON 230KV CKT 1
25SP	00NR	7	TO->FROM	G17_109	BUFFALO - JAMESTOWN 345KV CKT 1	704.9	0.04548	102.2632	G09_001IST 345.00 - WATERTOWN 345KV CKT 1
25SP	00NR	7	TO->FROM	G17_109	BUFFALO - JAMESTOWN 345KV CKT 1	704.9	0.04534	104.0727	FARGO - SHEYNNE 230KV CKT 1
20SP	00NR	7	TO->FROM	G17_109	BUFFALO - JAMESTOWN 345KV CKT 1	704.7	0.0453	101.5746	FARGO - SHEYNNE 230KV CKT 1
25SP	00NR	7	TO->FROM	G17_109	BUFFALO - JAMESTOWN 345KV CKT 1	704.9	0.04509	102.7279	FARGO - JAMES TOWN 230KV CKT 1
25SP	00NR	7	TO->FROM	G17_109	BUFFALO - JAMESTOWN 345KV CKT 1	704.9	0.04507	102.1311	PRAIRIE - WINGER 230KV CKT 1
25SP	00NR	7	TO->FROM	G17_109	BUFFALO - JAMESTOWN 345KV CKT 1	704.9	0.04504	102.5979	FARGO - JAMES TOWN 230KV CKT 2
25SP	00NR	7	TO->FROM	G17_109	BUFFALO - JAMESTOWN 345KV CKT 1	704.9	0.04375	102.0996	GRPRAR1-LNX3345.00 - HOLT.CO3 345.00 345KV CKT 1
25SP	00NR	7	TO->FROM	G17_109	BUFFALO - JAMESTOWN 345KV CKT 1	704.9	0.04375	102.1421	GRPRAR1-LNX3345.00 - YANKTON 345KV CKT Z
17G	16NR	7	TO->FROM	G17_109	BUFFALO - JAMESTOWN 345KV CKT 1	703.9	0.04313	107.4871	FORBES - ROSEAU 500KV CKT 1
17G	16NR	7	TO->FROM	G17_109	BUFFALO - JAMESTOWN 345KV CKT 1	703.9	0.04313	107.7712	ROSEAU - ROSEAUM 2 500.00 500KV CKT 1
17G	16NR	7	TO->FROM	G17_109	BUFFALO - JAMESTOWN 345KV CKT 1	703.9	0.04313	107.7712	ROSEAU - ROSEAUM 2 500.00 500KV CKT 1
17G	16NR	7	TO->FROM	G17_109	BUFFALO - JAMESTOWN 345KV CKT 1	703.9	0.04313	108.0411	RIEL - ROSEAU 500KV CKT 1
25SP	00NR	7	TO->FROM	G17_109	BUFFALO - JAMESTOWN 345KV CKT 1	704.9	0.04202	105.0853	HANKINSON - WAHPETON 230KV CKT 1
20SP	00NR	7	TO->FROM	G17_109	BUFFALO - JAMESTOWN 345KV CKT 1	704.7	0.04196	102.175	HANKINSON - WAHPETON 230KV CKT 1
25SP	00NR	7	TO->FROM	G17_109	ELLENDLMVP4 230.00 - J316_SUB 230.00 230KV CKT 1	342.7	0.03432	111.0541	ELLENDLMVP4 230.00 - MERRCRT4 230.00 230KV CKT 1
20SP	00NR	7	TO->FROM	G17_109	ELLENDLMVP4 230.00 - J316_SUB 230.00 230KV CKT 1	342.2	0.03424	110.1276	ELLENDLMVP4 230.00 - MERRCRT4 230.00 230KV CKT 1
16WP	00NR	7	TO->FROM	G17_109	ELLENDLMVP4 230.00 - J316_SUB 230.00 230KV CKT 1	340.7	0.03412	117.264	ELLENDLMVP4 230.00 - MERRCRT4 230.00 230KV CKT 1
17SP	00NR	7	TO->FROM	G17_109	ELLENDLMVP4 230.00 - J316_SUB 230.00 230KV CKT 1	341.7	0.03409	131.8141	ELLENDLMVP4 230.00 - MERRCRT4 230.00 230KV CKT 1
17G	16NR	7	TO->FROM	G17_109	ELLENDLMVP4 230.00 - J316_SUB 230.00 230KV CKT 1	340.6	0.03056	136.1066	ELLENDLMVP4 230.00 - MERRCRT4 230.00 230KV CKT 1
17SP	00NR	7	TO->FROM	G17_109	ELLENDLMVP4 230.00 - MERRCRT4 230.00 230KV CKT 1	382.5	0.0334	111.5001	ELLENDLMVP4 230.00 - J316_SUB 230.00 230KV CKT 1
17G	16NR	7	TO->FROM	G17_109	ELLENDLMVP4 230.00 - MERRCRT4 230.00 230KV CKT 1	382.4	0.02994	114.9008	ELLENDLMVP4 230.00 - J316_SUB 230.00 230KV CKT 1
17SP	00NR	7	FROM->TO	G17_109	LEWIS & CLARK - RICHLAND 115KV CKT 1	101	0.28018	107.4828	BELFIELD - MEDORA 230KV CKT 1
17SP	00NR	7	FROM->TO	G17_109	LEWIS & CLARK - RICHLAND 115KV CKT 1	101	0.28018	109.562	BEAVERHILL4 230.00 - DAWSON CREEK 230KV CKT 1
17SP	00NR	7	FROM->TO	G17_109	LEWIS & CLARK - RICHLAND 115KV CKT 1	101	0.28018	111.3442	BEAVERHILL4 230.00 - MEDORA 230KV CKT 1
17G	16NR	7	FROM->TO	G17_109	LEWIS & CLARK - RICHLAND 115KV CKT 1	100.9	0.27786	103.7812	BEAVERHILL4 230.00 - MEDORA 230KV CKT 1
17SP	00NR	7	FROM->TO	G17_109	LEWIS & CLARK - RICHLAND 115KV CKT 1	101	0.17894	105.0107	CULBERTSN E7115.00 - WILISTON 115KV CKT 1
20L	16NR	8	TO->FROM	G17_109	BEULAH - COYOTE 115KV CKT 1	102	0.04175	180.353	CENTER - COYOTE 345KV CKT 1
17G	16NR	8	TO->FROM	G17_109	BEULAH - COYOTE 115KV CKT 1	101.9	0.04072	307.9788	CENTER - COYOTE 345KV CKT 1
20SP	00NR	8	TO->FROM	G17_109	BEULAH - COYOTE 115KV CKT 1	101.9	0.0398	226.0412	CENTER - COYOTE 345KV CKT 1
25SP	00NR	8	TO->FROM	G17_109	BEULAH - COYOTE 115KV CKT 1	101.9	0.03979	240.9547	CENTER - COYOTE 345KV CKT 1
16WP	00NR	8	TO->FROM	G17_109	BEULAH - COYOTE 115KV CKT 1	122.9	0.03978	265.6059	CENTER - COYOTE 345KV CKT 1
17SP	00NR	8	TO->FROM	G17_109	BEULAH - COYOTE 115KV CKT 1	102	0.03977	272.1827	CENTER - COYOTE 345KV CKT 1
20WP	00NR	8	TO->FROM	G17_109	BEULAH - COYOTE 115KV CKT 1	122.9	0.03954	255.1284	CENTER - COYOTE 345KV CKT 1
25SP	00NR	8	TO->FROM	G17_109	BUFFALO - JAMESTOWN 345KV CKT 1	704.9	0.04969	113.1225	CENTER - CNTSHNT3 345.00 345KV CKT Z1
25SP	00NR	8	TO->FROM	G17_109	BUFFALO - JAMESTOWN 345KV CKT 1	704.9	0.04969	113.1225	CNTSHNT3 345.00 - PRAIRIE3 345.00 345KV CKT 1
20SP	00NR	8	TO->FROM	G17_109	BUFFALO - JAMESTOWN 345KV CKT 1	704.7	0.04959	109.3471	CNTSHNT3 345.00 - PRAIRIE3 345.00 345KV CKT 1
20SP	00NR	8	TO->FROM	G17_109	BUFFALO - JAMESTOWN 345KV CKT 1	704.7	0.04959	109.3471	CENTER - CNTSHNT3 345.00 345KV CKT Z1
17SP	00NR	8	TO->FROM	G17_109	BUFFALO - JAMESTOWN 345KV CKT 1	705	0.04933	107.3171	CNTSHNT3 345.00 - PRAIRIE3 345.00 345KV CKT 1
17SP	00NR	8	TO->FROM	G17_109	BUFFALO - JAMESTOWN 345KV CKT 1	705	0.04933	107.3171	CENTER - CNTSHNT3 345.00 345KV CKT Z1
25SP	00NR	8	TO->FROM	G17_109	BUFFALO - JAMESTOWN 345KV CKT 1	704.9	0.04915	102.3022	P12:345:UMZB:# 103 #: BD IN SD. LOSS OF LINE
25SP	00NR	8	TO->FROM	G17_109	BUFFALO - JAMESTOWN 345KV CKT 1	704.9	0.04895	102.4066	FTTHOM1-LNX3345.00 - G16-017-TAP 345.00 345KV CKT 1
25SP	00NR	8	TO->FROM	G17_109	BUFFALO - JAMESTOWN 345KV CKT 1	704.9	0.04895	102.4066	FT THOMPSON - FTTHOM1-LNX3345.00 345KV CKT Z
25SP	00NR	8	TO->FROM	G17_109	BUFFALO - JAMESTOWN 345KV CKT 1	704.9	0.04821	102.3304	P12:345:UMZB:# 109 #: LOS GRT IN ND. LOS GRT

SEASON	GROUP	SCENARIO	DIRECTION	SOURCE	MONITORED ELEMENT	RATE (MVA)	TDF	CONTINGENCY LOADING %	CONTINGENCY
25SP	00NR	8	TO->FROM	G17_109	BUFFALO - JAMESTOWN 345KV CKT 1	704.9	0.04821	102.3304	LELAND OLDS - LELAND1-LNX3345.00 345KV CKT Z
17G	16NR	8	TO->FROM	G17_109	BUFFALO - JAMESTOWN 345KV CKT 1	703.9	0.04656	106.9043	CENTER - CNTSHNT3 345.00 345KV CKT Z1
17G	16NR	8	TO->FROM	G17_109	BUFFALO - JAMESTOWN 345KV CKT 1	703.9	0.04656	106.9043	CNTSHNT3 345.00 - PRAIRIE3 345.00 345KV CKT 1
20SP	00NR	8	TO->FROM	G17_109	BUFFALO - JAMESTOWN 345KV CKT 1	704.7	0.04602	112.8461	FORBES - ROSEAU 500KV CKT 1
20SP	00NR	8	TO->FROM	G17_109	BUFFALO - JAMESTOWN 345KV CKT 1	704.7	0.04602	113.286	ROSEAU - ROSEAUM 2 500.00 500KV CKT 1
20SP	00NR	8	TO->FROM	G17_109	BUFFALO - JAMESTOWN 345KV CKT 1	704.7	0.04602	113.286	ROSEAU - ROSEAUM 2 500.00 500KV CKT 1
20SP	00NR	8	TO->FROM	G17_109	BUFFALO - JAMESTOWN 345KV CKT 1	704.7	0.04602	113.7259	RIEL - ROSEAU 500KV CKT 1
25SP	00NR	8	TO->FROM	G17_109	BUFFALO - JAMESTOWN 345KV CKT 1	704.9	0.04601	114.4451	FORBES - ROSEAU 500KV CKT 1
25SP	00NR	8	TO->FROM	G17_109	BUFFALO - JAMESTOWN 345KV CKT 1	704.9	0.04601	114.8281	ROSEAU - ROSEAUM 2 500.00 500KV CKT 1
25SP	00NR	8	TO->FROM	G17_109	BUFFALO - JAMESTOWN 345KV CKT 1	704.9	0.04601	114.8281	ROSEAU - ROSEAUM 2 500.00 500KV CKT 1
25SP	00NR	8	TO->FROM	G17_109	BUFFALO - JAMESTOWN 345KV CKT 1	704.9	0.04601	115.2111	RIEL - ROSEAU 500KV CKT 1
17SP	00NR	8	TO->FROM	G17_109	BUFFALO - JAMESTOWN 345KV CKT 1	705	0.04578	111.085	FORBES - ROSEAU 500KV CKT 1
17SP	00NR	8	TO->FROM	G17_109	BUFFALO - JAMESTOWN 345KV CKT 1	705	0.04578	111.5106	ROSEAU - ROSEAUM 2 500.00 500KV CKT 1
17SP	00NR	8	TO->FROM	G17_109	BUFFALO - JAMESTOWN 345KV CKT 1	705	0.04578	111.5106	ROSEAU - ROSEAUM 2 500.00 500KV CKT 1
17SP	00NR	8	TO->FROM	G17_109	BUFFALO - JAMESTOWN 345KV CKT 1	705	0.04578	111.9361	RIEL - ROSEAU 500KV CKT 1
25SP	00NR	8	TO->FROM	G17_109	BUFFALO - JAMESTOWN 345KV CKT 1	704.9	0.04567	102.1726	SQUARE BUTTE - STANTON 230KV CKT 1
25SP	00NR	8	TO->FROM	G17_109	BUFFALO - JAMESTOWN 345KV CKT 1	704.9	0.04548	102.2632	G09_001IST 345.00 - WATERTOWN 345KV CKT 1
25SP	00NR	8	TO->FROM	G17_109	BUFFALO - JAMESTOWN 345KV CKT 1	704.9	0.04534	104.0727	FARGO - SHEYNNE 230KV CKT 1
20SP	00NR	8	TO->FROM	G17_109	BUFFALO - JAMESTOWN 345KV CKT 1	704.7	0.0453	101.5746	FARGO - SHEYNNE 230KV CKT 1
25SP	00NR	8	TO->FROM	G17_109	BUFFALO - JAMESTOWN 345KV CKT 1	704.9	0.04509	102.7279	FARGO - JAMES TOWN 230KV CKT 1
25SP	00NR	8	TO->FROM	G17_109	BUFFALO - JAMESTOWN 345KV CKT 1	704.9	0.04507	102.1311	PRAIRIE - WINGER 230KV CKT 1
25SP	00NR	8	TO->FROM	G17_109	BUFFALO - JAMESTOWN 345KV CKT 1	704.9	0.04504	102.5979	FARGO - JAMES TOWN 230KV CKT 2
25SP	00NR	8	TO->FROM	G17_109	BUFFALO - JAMESTOWN 345KV CKT 1	704.9	0.04375	102.0996	GRPRAR1-LNX3345.00 - HOLT.CO3 345.00 345KV CKT 1
25SP	00NR	8	TO->FROM	G17_109	BUFFALO - JAMESTOWN 345KV CKT 1	704.9	0.04375	102.1421	GRPRAR1-LNX3345.00 - YANKTON 345KV CKT Z
17G	16NR	8	TO->FROM	G17_109	BUFFALO - JAMESTOWN 345KV CKT 1	703.9	0.04313	107.4871	FORBES - ROSEAU 500KV CKT 1
17G	16NR	8	TO->FROM	G17_109	BUFFALO - JAMESTOWN 345KV CKT 1	703.9	0.04313	107.7712	ROSEAU - ROSEAUM 2 500.00 500KV CKT 1
17G	16NR	8	TO->FROM	G17_109	BUFFALO - JAMESTOWN 345KV CKT 1	703.9	0.04313	107.7712	ROSEAU - ROSEAUM 2 500.00 500KV CKT 1
17G	16NR	8	TO->FROM	G17_109	BUFFALO - JAMESTOWN 345KV CKT 1	703.9	0.04313	108.0411	RIEL - ROSEAU 500KV CKT 1
25SP	00NR	8	TO->FROM	G17_109	BUFFALO - JAMESTOWN 345KV CKT 1	704.9	0.04202	105.0853	HANKINSON - WAHPETON 230KV CKT 1
20SP	00NR	8	TO->FROM	G17_109	BUFFALO - JAMESTOWN 345KV CKT 1	704.7	0.04196	102.175	HANKINSON - WAHPETON 230KV CKT 1
25SP	00NR	8	TO->FROM	G17_109	ELLENDLMVP4 230.00 - J316_SUB 230.00 230KV CKT 1	342.7	0.03432	111.0541	ELLENDLMVP4 230.00 - MERRCRT4 230.00 230KV CKT 1
20SP	00NR	8	TO->FROM	G17_109	ELLENDLMVP4 230.00 - J316_SUB 230.00 230KV CKT 1	342.2	0.03424	110.1276	ELLENDLMVP4 230.00 - MERRCRT4 230.00 230KV CKT 1
16WP	00NR	8	TO->FROM	G17_109	ELLENDLMVP4 230.00 - J316_SUB 230.00 230KV CKT 1	340.7	0.03412	117.264	ELLENDLMVP4 230.00 - MERRCRT4 230.00 230KV CKT 1
17SP	00NR	8	TO->FROM	G17_109	ELLENDLMVP4 230.00 - J316_SUB 230.00 230KV CKT 1	341.7	0.03409	131.8141	ELLENDLMVP4 230.00 - MERRCRT4 230.00 230KV CKT 1
17G	16NR	8	TO->FROM	G17_109	ELLENDLMVP4 230.00 - J316_SUB 230.00 230KV CKT 1	340.6	0.03056	136.1066	ELLENDLMVP4 230.00 - MERRCRT4 230.00 230KV CKT 1
17SP	00NR	8	TO->FROM	G17_109	ELLENDLMVP4 230.00 - MERRCRT4 230.00 230KV CKT 1	382.5	0.0334	111.5001	ELLENDLMVP4 230.00 - J316_SUB 230.00 230KV CKT 1
17G	16NR	8	TO->FROM	G17_109	ELLENDLMVP4 230.00 - MERRCRT4 230.00 230KV CKT 1	382.4	0.02994	114.9008	ELLENDLMVP4 230.00 - J316_SUB 230.00 230KV CKT 1
17SP	00NR	8	FROM->TO	G17_109	LEWIS & CLARK - RICHLAND 115KV CKT 1	101	0.28018	107.4828	BELFIELD - MEDORA 230KV CKT 1
17SP	00NR	8	FROM->TO	G17_109	LEWIS & CLARK - RICHLAND 115KV CKT 1	101	0.28018	109.562	BEAVERHILL4 230.00 - DAWSON CREEK 230KV CKT 1
17SP	00NR	8	FROM->TO	G17_109	LEWIS & CLARK - RICHLAND 115KV CKT 1	101	0.28018	111.3442	BEAVERHILL4 230.00 - MEDORA 230KV CKT 1
17G	16NR	8	FROM->TO	G17_109	LEWIS & CLARK - RICHLAND 115KV CKT 1	100.9	0.27786	103.7812	BEAVERHILL4 230.00 - MEDORA 230KV CKT 1
17SP	00NR	8	FROM->TO	G17_109	LEWIS & CLARK - RICHLAND 115KV CKT 1	101	0.17894	105.0107	CULBERTSN E7115.00 - WILISTON 115KV CKT 1

11.10 I: SHORT CIRCUIT ANALYSIS

GEN-2017-108:

PSS®E-32.2.0 ASCC SHORT CIRCUIT CURRENTS
TUE, OCT 31 2017 17:14
2015 MDWG FINAL WITH 2013 MMWG, UPDATED WITH 2014 SERC & MRO
MDWG 17S WITH MMWG 15S, MRO 16W TOPO/16S PROF, SERC 16S

OPTIONS USED:
- FLAT CONDITIONS
  - BUS VOLTAGES SET TO 1 PU AT 0 PHASE ANGLE
  - GENERATOR P=0, Q=0
  - TRANSFOMRER TAP RATIOS=1.0 PU and PHASE ANGLES=0.0
  - LINE CHARGING=0.0 IN +/-/0 SEQUENCE
  - LOAD=0.0 IN +/- SEQUENCE, CONSIDERED IN ZERO SEQUENCE
  - LINE/FIXED/SWITCHED SHUNTS=0.0 AND MAGNETIZING ADMITTANCE=0.0 IN +/-/0 SEQUENCE
  - DC LINES AND FACTS DEVICES BLOCKED
  - TRANSFORMER ZERO SEQUENCE IMPEDANCE CORRECTIONS IGNORED

X---------- BUS ----------X			THREE PHASE FAULT /I+/	AN(I+)
542995	[MONTROS5 161.00]	AMP	17467.6	-84.08
300071	[5CLINTN 161.00]	AMP	14623.2	-80.88
541207	[ARCHIE 5 161.00]	AMP	16853.1	-82.79
541245	[KCSOUTH5 161.00]	AMP	16717.2	-81.36
541317	[NRAYMORE 161.00]	AMP	7787.4	-83.46
542969	[STILWEL5 161.00]	AMP	39037.4	-85.84
599300	[GEN17108 161.00]	AMP	17467.6	-84.08
300108	[5OSCEOL 161.00]	AMP	6262.6	-77.23
300124	[5HOLDEN 161.00]	AMP	6033.1	-77.58
300692	[2CLINTN 69.000]	AMP	13559.7	-79.04
505502	[TRUMAN 5 161.00]	AMP	7323.1	-81.32
541217	[WINDSR 5 161.00]	AMP	7526.0	-80.37
541224	[LNGVW 5 161.00]	AMP	21741.1	-83.55
541239	[HSNVL 5 161.00]	AMP	15472.5	-82.15
541240	[ADRIAN 5 161.00]	AMP	8135.3	-80.79
541242	[CLINTON5 161.00]	AMP	14561.1	-80.70
541341	[S.HARP 5 161.00]	AMP	25063.8	-85.17
542968	[STILWEL7 345.00]	AMP	24285.7	-85.88
542994	[HICKMAN5 161.00]	AMP	18428.3	-83.89
542999	[LVISTAW5 161.00]	AMP	13351.5	-83.67
543050	[ANTIOCH5 161.00]	AMP	21960.4	-84.42
543053	[REDEL 5 161.00]	AMP	23852.3	-84.19
543057	[BUCYRUS5 161.00]	AMP	19174.1	-84.31
543126	[LACKMAN5 161.00]	AMP	13049.2	-83.85
300110	[5PITTSV 161.00]	AMP	7883.8	-77.99
300117	[5SEDALA 161.00]	AMP	8727.5	-79.20
300336	[2HOLDEN 69.000]	AMP	5941.7	-79.83
300534	[2LINCLN 69.000]	AMP	4375.5	-63.77
300701	[2GAINES 69.000]	AMP	4473.3	-61.12
300702	[2LADUE 69.000]	AMP	3878.8	-60.08
300703	[2LEETON 69.000]	AMP	3848.9	-60.14
300706	[2PIPER 69.000]	AMP	3583.6	-60.44
300709	[2SHARSNV 69.000]	AMP	6184.2	-79.57

```
300811 [2OSCEOL     69.000] AMP     5942.6   -73.60
300816 [5COLLINS    161.00] AMP     6147.5   -77.32
301342 [5BUTLER     161.00] AMP     6517.0   -79.79
301402 [5LOSTVALY   161.00] AMP     7141.1   -80.89
541198 [PECULR 7    345.00] AMP    20125.5   -85.62
541222 [WSTELEC5    161.00] AMP    16600.5   -82.38
541223 [GRDVWE 5    161.00] AMP    19502.9   -82.49
541225 [PHILL 5     161.00] AMP    31038.2   -85.94
541249 [HOOKRD 5    161.00] AMP    21323.9   -84.34
541282 [LNGVW 2     69.000] AMP     7421.7   -82.49
541295 [HSNVL 2     69.000] AMP     8948.5   -81.62
541303 [CLNTN N2    69.000] AMP     8108.0   -81.23
541320 [CLNTN S2    69.000] AMP     8407.8   -80.92
541343 [S.HARP 2    69.000] AMP     4523.3   -78.03
541344 [PECULRS5    161.00] AMP    23661.4   -85.24
542965 [W.GRDNR7    345.00] AMP    25271.6   -85.82
542981 [LACYGNE7    345.00] AMP    24970.9   -86.87
542993 [STHTOWN5    161.00] AMP    32507.4   -84.13
543002 [MARTCIT5    161.00] AMP    23929.6   -83.67
543008 [BUNKRDG5    161.00] AMP    16253.6   -83.64
543042 [SPRGHL 5    161.00] AMP    10845.6   -83.71
543046 [OXFORD 5    161.00] AMP    20022.5   -84.18
543058 [NLOUISB5    161.00] AMP     8714.8   -83.70
543068 [WAGSTAF5    161.00] AMP    13369.1   -83.76
300034 [5EDMONS     161.00] AMP     6395.5   -80.71
300320 [5LEVASY     161.00] AMP     9755.6   -78.57
300323 [2CENTRV     69.000] AMP     4151.2   -72.78
300327 [2ELM        69.000] AMP     4115.5   -78.29
300331 [2PITTSV     69.000] AMP     4191.6   -82.11
300541 [2SEDALI     69.000] AMP     8868.6   -77.10
300558 [2MTHULD     69.000] AMP     2750.4   -63.51
300687 [2APPLTN     69.000] AMP     2798.2   -58.31
300689 [2BUTLER     69.000] AMP     5764.6   -74.14
300690 [2BUTLERE    69.000] AMP     4613.2   -69.15
300696 [2CREIGH     69.000] AMP     3939.7   -63.48
300698 [2ELYNNE     69.000] AMP     3176.9   -68.56
300699 [2ELYNTP     69.000] AMP     5897.4   -77.57
300810 [2MTZION     69.000] AMP     3815.7   -60.90
300817 [2OSCEOLA    69.000] AMP     5939.5   -71.11
301370 [5TURKEYCRK  161.00] AMP     5347.3   -79.88
505498 [STOCKTN5    161.00] AMP     8332.9   -77.78
532774 [SWISVAL7    345.00] AMP    16369.8   -85.35
532793 [NEOSHO 7    345.00] AMP    16251.0   -84.47
532799 [WAVERLY7    345.00] AMP    14744.2   -86.50
533267 [SPRINGH3    115.00] AMP     9582.3   -84.29
541200 [PHILL 7     345.00] AMP    18162.9   -85.64
541208 [NEVADA 5    161.00] AMP     5663.5   -79.44
541209 [SEDALIA5    161.00] AMP     9159.5   -79.16
541210 [MARTCTY5    161.00] AMP    26947.4   -83.48
541243 [LKWINGB5    161.00] AMP    23123.0   -84.97
541246 [STROTHR5    161.00] AMP    15001.1   -81.95
541280 [PHILL 2     69.000] AMP    13307.2   -84.78
541283 [BRMALL 2    69.000] AMP     2811.0   -74.38
541284 [GRDVWTP2    69.000] AMP     8163.8   -78.95
```

```
541291 [FREEMAN2    69.000] AMP     4498.9   -73.31
541294 [HSNVLS 2    69.000] AMP     7441.3   -78.91
541296 [HSNVLSW2    69.000] AMP     8360.5   -80.67
541301 [CLNTPLT2    69.000] AMP     8661.3   -80.45
541302 [CLNTGRN2    69.000] AMP     8355.9   -80.61
541313 [HARRIS      161.00] AMP    22847.2   -84.92
541314 [NWARSAW5    161.00] AMP     6951.3   -80.85
541342 [PECULR 5    161.00] AMP    24427.5   -85.47
542966 [WGARDNR5    161.00] AMP    27262.5   -86.91
542977 [CRAIG  7    345.00] AMP    21518.3   -85.70
542992 [BENDIX 5    161.00] AMP    26911.6   -83.83
543001 [FOREST 5    161.00] AMP    28874.1   -84.29
543010 [WINJT S5    161.00] AMP    21751.5   -84.15
543036 [OLATHE 5    161.00] AMP    25555.6   -84.48
543067 [CENTENL5    161.00] AMP     9908.7   -83.24
300070 [5CLARK      161.00] AMP     7437.6   -79.32
300082 [5GEORGE     161.00] AMP     7801.0   -78.57
300101 [5MORGAN     161.00] AMP     9958.8   -77.61
300118 [5STKAEC     161.00] AMP     7900.6   -77.71
300324 [2CHAPHL     69.000] AMP     3814.3   -79.62
300325 [2RT Z       69.000] AMP     3881.4   -79.34
300328 [2MAGNOL     69.000] AMP     2136.9   -64.52
300329 [2OAKGVNW    69.000] AMP     4185.7   -82.09
300334 [2ROSEHL     69.000] AMP     3411.7   -65.54
300530 [2GEOGT2     69.000] AMP     6946.6   -74.08
300545 [2SYLVAN     69.000] AMP     4524.2   -64.86
300555 [5GRAVOI     161.00] AMP     7283.9   -79.89
300557 [2IVYBND     69.000] AMP     2613.4   -62.97
300562 [2STOVER     69.000] AMP     1833.4   -65.05
300688 [2AUSTIN     69.000] AMP     4160.0   -66.49
300697 [2CRESTH     69.000] AMP     3142.9   -63.51
300705 [2PECULR     69.000] AMP     3235.6   -64.15
300707 [2PL GAP     69.000] AMP     4658.8   -71.27
300739 [7BLACKBERRY 345.00] AMP    12277.2   -84.35
300773 [2ELKTON     69.000] AMP     3855.8   -61.98
300789 [2TRUMAN     69.000] AMP     1838.2   -58.75
300804 [2DAMSCUS    69.000] AMP     4394.1   -64.26
300809 [2ICONTP     69.000] AMP     3881.6   -64.45
300813 [2TABORVL    69.000] AMP     2805.9   -58.54
301401 [2TURKEYCRK  69.000] AMP     6341.6   -77.82
510380 [DELWARE7    345.00] AMP    11407.4   -84.83
532768 [EMPEC 7     345.00] AMP    17307.7   -86.18
532775 [87TH 7      345.00] AMP    19924.2   -85.69
532780 [CANEYRV7    345.00] AMP     9931.1   -85.49
532797 [WOLFCRK7    345.00] AMP    16014.0   -86.81
532802 [WAVERTX7    345.00] AMP    12578.7   -86.04
532856 [SWISVAL6    230.00] AMP    21588.2   -85.42
532937 [NEOSHO 5    161.00] AMP    22083.7   -84.22
533021 [NEOSHO 4    138.00] AMP    23110.9   -84.44
533262 [BONITA 3    115.00] AMP     9623.2   -83.53
541201 [SIBLEY 7    345.00] AMP    20284.0   -85.83
541206 [PRALEE 5    161.00] AMP    19336.7   -83.22
541218 [GRNWD 5     161.00] AMP    20689.0   -84.58
541234 [WAFB 5      161.00] AMP     6316.5   -80.11
```

```
541241 [SEDEAST5    161.00] AMP     7292.4   -79.91
541271 [SEDN 2      69.000] AMP     6834.6   -79.45
541272 [SEDS 2      69.000] AMP     6059.4   -80.91
541279 [RGREEN 2    69.000] AMP    13448.1   -84.55
541285 [GRDWCTY2    69.000] AMP     7887.4   -78.78
541287 [MARTCTY2    69.000] AMP     6639.5   -79.24
541288 [RGAFB 2     69.000] AMP     8256.7   -78.34
541292 [ANCONDA2    69.000] AMP     6546.1   -76.80
541293 [HSNVLW 2    69.000] AMP     6664.6   -77.07
541297 [HSNVLN 2    69.000] AMP     8010.8   -79.26
541298 [GRDNCTY2    69.000] AMP     4210.2   -72.04
541300 [POSTOAK2    69.000] AMP     5034.7   -70.74
541304 [URICHTP2    69.000] AMP     2958.5   -64.08
541308 [NEVADA 2    69.000] AMP     4371.6   -82.10
541315 [NWARSAW2    69.000] AMP     4033.8   -81.29
541340 [BELTONS5    161.00] AMP    19892.4   -84.23
541347 [RAYMORE     69.000] AMP     8519.5   -81.87
541382 [HONEYWL5    161.00] AMP    22026.3   -82.97
542978 [CRAIG  5    161.00] AMP    39251.1   -85.68
542996 [MIDTOWN5    161.00] AMP    32159.6   -84.66
542997 [LEEDS  5    161.00] AMP    31105.4   -84.95
543007 [SWOPE S5    161.00] AMP    19398.1   -84.47
543035 [TOMHAWK5    161.00] AMP    23219.9   -83.54
543043 [MURLEN 5    161.00] AMP    18042.9   -84.25
543045 [SWITZER5    161.00] AMP    18108.3   -84.05
543048 [COLLEGE5    161.00] AMP    27881.6   -84.69
543049 [CEDRCRK5    161.00] AMP    27486.2   -84.94
543054 [CEDARNL5    161.00] AMP    13625.5   -84.60
543069 [PAOLA  5    161.00] AMP     9924.3   -83.14
543077 [PLSTVAL5    161.00] AMP     9749.8   -83.34
543105 [BULLCRK5    161.00] AMP    24982.8   -87.09
543132 [BNSF   5    161.00] AMP    19931.0   -85.73
548808 [ECKLES-161  161.00] AMP    25847.3   -83.12

                            PSS®E-32.2.0 ASCC SHORT CIRCUIT CURRENTS
TUE, OCT 31 2017  17:14
2015 MDWG FINAL WITH 2013 MMWG, UPDATED WITH 2014 SERC & MRO
MDWG 2025S WITH MMWG 2024S, MRO & SERC 2025 SUMMER

OPTIONS USED:
    - FLAT CONDITIONS
         - BUS VOLTAGES SET TO 1 PU AT 0 PHASE ANGLE
         - GENERATOR P=0, Q=0
         - TRANSFOMRER TAP RATIOS=1.0 PU and PHASE ANGLES=0.0
         - LINE CHARGING=0.0 IN +/-/0 SEQUENCE
         - LOAD=0.0 IN +/- SEQUENCE, CONSIDERED IN ZERO SEQUENCE
         - LINE/FIXED/SWITCHED SHUNTS=0.0 AND MAGNETIZING ADMITTANCE=0.0
IN +/-/0 SEQUENCE
         - DC LINES AND FACTS DEVICES BLOCKED
         - TRANSFORMER ZERO SEQUENCE IMPEDANCE CORRECTIONS IGNORED

                                  THREE PHASE FAULT
X---------- BUS ----------X          /I+/    AN(I+)
542995 [MONTROS5    161.00] AMP    13330.9   -82.40
```

```
300071 [5CLINTN     161.00] AMP    13277.5   -80.08
541207 [ARCHIE 5    161.00] AMP    16412.5   -82.70
541245 [KCSOUTH5    161.00] AMP    16594.1   -81.31
541317 [NRAYMORE    161.00] AMP     7655.8   -83.37
542969 [STILWEL5    161.00] AMP    38913.8   -85.82
599300 [GEN17108    161.00] AMP    13330.9   -82.40
300108 [5OSCEOL     161.00] AMP     6133.8   -77.19
300124 [5HOLDEN     161.00] AMP     5945.4   -77.53
300692 [2CLINTN     69.000] AMP    13163.8   -78.65
505502 [TRUMAN 5    161.00] AMP     7033.2   -81.00
541217 [WINDSR 5    161.00] AMP     7309.8   -80.15
541224 [LNGVW 5     161.00] AMP    21645.2   -83.54
541239 [HSNVL 5     161.00] AMP    15234.0   -82.12
541240 [ADRIAN 5    161.00] AMP     8029.1   -80.79
541242 [CLINTON5    161.00] AMP    13226.1   -79.92
541341 [S.HARP 5    161.00] AMP    24869.5   -85.14
542968 [STILWEL7    345.00] AMP    24418.3   -85.85
542994 [HICKMAN5    161.00] AMP    18476.7   -83.90
542999 [LVISTAW5    161.00] AMP    13280.9   -83.63
543050 [ANTIOCH5    161.00] AMP    21977.0   -84.41
543053 [REDEL  5    161.00] AMP    23806.0   -84.18
543057 [BUCYRUS5    161.00] AMP    19166.2   -84.30
543126 [LACKMAN5    161.00] AMP    13039.8   -83.85
300110 [5PITTSV     161.00] AMP     7817.3   -77.98
300117 [5SEDALA     161.00] AMP     8622.0   -79.13
300336 [2HOLDEN     69.000] AMP     5909.2   -79.80
300534 [2LINCLN     69.000] AMP     4357.6   -63.78
300701 [2GAINES     69.000] AMP     4435.9   -61.17
300702 [2LADUE      69.000] AMP     3851.4   -60.15
300703 [2LEETON     69.000] AMP     3822.9   -60.20
300706 [2PIPER      69.000] AMP     3563.3   -60.50
300709 [2SHARSNV    69.000] AMP     6160.5   -79.60
300811 [2OSCEOL     69.000] AMP     5897.5   -73.59
300816 [5COLLINS    161.00] AMP     6055.3   -77.33
301342 [5BUTLER     161.00] AMP     6443.4   -79.82
301402 [5LOSTVALY   161.00] AMP     6887.1   -80.61
541198 [PECULR 7    345.00] AMP    20162.0   -85.59
541222 [WSTELEC5    161.00] AMP    16581.3   -82.38
541223 [GRDVWE 5    161.00] AMP    19446.5   -82.48
541225 [PHILL 5     161.00] AMP    31271.9   -85.99
541249 [HOOKRD 5    161.00] AMP    21296.1   -84.34
541282 [LNGVW 2     69.000] AMP     7417.4   -82.49
541295 [HSNVL 2     69.000] AMP     8930.0   -81.61
541303 [CLNTN N2    69.000] AMP     7958.3   -80.98
541320 [CLNTN S2    69.000] AMP     8252.3   -80.68
541343 [S.HARP 2    69.000] AMP     4519.6   -78.03
541344 [PECULRS5    161.00] AMP    23533.9   -85.23
542965 [W.GRDNR7    345.00] AMP    25952.6   -85.82
542981 [LACYGNE7    345.00] AMP    25087.2   -86.86
542993 [STHTOWN5    161.00] AMP    32796.2   -84.15
543002 [MARTCIT5    161.00] AMP    23887.1   -83.66
543008 [BUNKRDG5    161.00] AMP    16214.5   -83.61
543042 [SPRGHL 5    161.00] AMP    10841.1   -83.71
543046 [OXFORD 5    161.00] AMP    20083.4   -84.19
```

```
543058 [NLOUISB5    161.00] AMP     8713.2   -83.70
543068 [WAGSTAF5    161.00] AMP    13382.5   -83.76
300034 [5EDMONS     161.00] AMP     6230.6   -80.52
300320 [5LEVASY     161.00] AMP     9679.0   -78.56
300323 [2CENTRV     69.000] AMP     4134.9   -72.78
300327 [2ELM        69.000] AMP     4102.0   -78.28
300331 [2PITTSV     69.000] AMP     4180.7   -82.10
300541 [2SEDALI     69.000] AMP     8824.5   -77.07
300558 [2MTHULD     69.000] AMP     2745.4   -63.52
300687 [2APPLTN     69.000] AMP     2786.7   -58.38
300689 [2BUTLER     69.000] AMP     5733.5   -74.20
300690 [2BUTLERE    69.000] AMP     4592.0   -69.22
300696 [2CREIGH     69.000] AMP     3924.1   -63.53
300698 [2ELYNNE     69.000] AMP     3170.9   -68.59
300699 [2ELYNTP     69.000] AMP     5875.1   -77.60
300810 [2MTZION     69.000] AMP     3792.5   -60.95
300817 [2OSCEOLA    69.000] AMP     5895.0   -71.11
301370 [5TURKEYCRK  161.00] AMP     5210.1   -79.69
505498 [STOCKTN5    161.00] AMP     8209.8   -77.87
532776 [DOUGLAS7    345.00] AMP    18189.4   -85.13
532793 [NEOSHO 7    345.00] AMP    16342.2   -84.47
532799 [WAVERLY7    345.00] AMP    14793.1   -86.50
533267 [SPRINGH3    115.00] AMP     9592.1   -84.28
541200 [PHILL 7     345.00] AMP    18182.4   -85.63
541208 [NEVADA 5    161.00] AMP     5588.5   -79.50
541209 [SEDALIA5    161.00] AMP     9058.2   -79.10
541210 [MARTCTY5    161.00] AMP    26897.4   -83.47
541243 [LKWINGB5    161.00] AMP    23162.5   -84.99
541246 [STROTHR5    161.00] AMP    15029.9   -81.97
541280 [PHILL 2     69.000] AMP    13295.9   -84.78
541283 [BRMALL 2    69.000] AMP     2810.3   -74.38
541284 [GRDVWTP2    69.000] AMP     8159.1   -78.95
541291 [FREEMAN2    69.000] AMP     4495.0   -73.32
541294 [HSNVLS 2    69.000] AMP     7428.7   -78.90
541296 [HSNVLSW2    69.000] AMP     8346.0   -80.66
541301 [CLNTPLT2    69.000] AMP     8500.5   -80.23
541302 [CLNTGRN2    69.000] AMP     8202.4   -80.38
541313 [HARRIS      161.00] AMP    23321.0   -85.04
541314 [NWARSAW5    161.00] AMP     6710.8   -80.58
541342 [PECULR 5    161.00] AMP    24321.4   -85.46
542966 [WGARDNR5    161.00] AMP    27452.1   -86.93
542977 [CRAIG  7    345.00] AMP    21944.5   -85.74
542992 [BENDIX 5    161.00] AMP    27123.1   -83.84
543001 [FOREST 5    161.00] AMP    29431.4   -84.35
543010 [WINJT S5    161.00] AMP    21987.7   -84.17
543036 [OLATHE 5    161.00] AMP    25727.3   -84.48
543067 [CENTENL5    161.00] AMP     9952.5   -83.24
300070 [5CLARK      161.00] AMP     7274.6   -79.45
300082 [5GEORGE     161.00] AMP     7736.0   -78.53
300101 [5MORGAN     161.00] AMP     9853.7   -77.68
300118 [5STKAEC     161.00] AMP     7782.3   -77.81
300324 [2CHAPHL     69.000] AMP     3804.3   -79.61
300325 [2RT Z       69.000] AMP     3870.7   -79.33
300328 [2MAGNOL     69.000] AMP     2132.7   -64.54
```

```
300329 [2OAKGVNW    69.000] AMP     4174.8   -82.08
300334 [2ROSEHL     69.000] AMP     3400.3   -65.57
300530 [2GEOGT2     69.000] AMP     6923.3   -74.08
300545 [2SYLVAN     69.000] AMP     4514.9   -64.88
300555 [5GRAVOI     161.00] AMP     7226.3   -79.84
300557 [2IVYBND     69.000] AMP     2610.2   -62.98
300562 [2STOVER     69.000] AMP     1831.2   -65.05
300688 [2AUSTIN     69.000] AMP     4146.7   -66.53
300697 [2CRESTH     69.000] AMP     3135.1   -63.56
300705 [2PECULR     69.000] AMP     3228.7   -64.19
300707 [2PL GAP     69.000] AMP     4638.1   -71.34
300739 [7BLACKBERRY 345.00] AMP    12287.1   -84.35
300773 [2ELKTON     69.000] AMP     3845.0   -62.04
300789 [2TRUMAN     69.000] AMP     1832.8   -58.78
300804 [2DAMSCUS    69.000] AMP     4367.4   -64.30
300809 [2ICONTP     69.000] AMP     3862.5   -64.48
300813 [2TABORVL    69.000] AMP     2795.2   -58.63
301401 [2TURKEYCRK  69.000] AMP     6277.2   -77.70
510380 [DELWARE7    345.00] AMP    11504.5   -84.87
532774 [SWISVAL7    345.00] AMP    16658.2   -85.35
532775 [87TH 7      345.00] AMP    20387.4   -85.75
532780 [CANEYRV7    345.00] AMP     9971.8   -85.49
532797 [WOLFCRK7    345.00] AMP    16078.7   -86.81
532802 [WAVERTX7    345.00] AMP    12613.5   -86.04
532937 [NEOSHO 5    161.00] AMP    22196.6   -84.23
533021 [NEOSHO 4    138.00] AMP    23314.5   -84.39
533262 [BONITA 3    115.00] AMP     9639.7   -83.51
533285 [DOUGLAS3    115.00] AMP    23728.6   -85.76
541201 [SIBLEY 7    345.00] AMP    20294.7   -85.81
541206 [PRALEE 5    161.00] AMP    19473.5   -83.27
541218 [GRNWD 5     161.00] AMP    21283.3   -84.74
541234 [WAFB 5      161.00] AMP     6278.9   -80.08
541241 [SEDEAST5    161.00] AMP     7245.3   -79.87
541271 [SEDN 2      69.000] AMP     6808.2   -79.44
541272 [SEDS 2      69.000] AMP     6038.6   -80.90
541279 [RGREEN 2    69.000] AMP    13434.6   -84.56
541285 [GRDWCTY2    69.000] AMP     7883.0   -78.78
541287 [MARTCTY2    69.000] AMP     6636.6   -79.24
541288 [RGAFB 2     69.000] AMP     8251.9   -78.34
541292 [ANCONDA2    69.000] AMP     6536.6   -76.80
541293 [HSNVLW 2    69.000] AMP     6654.6   -77.07
541297 [HSNVLN 2    69.000] AMP     7999.7   -79.26
541298 [GRDNCTY2    69.000] AMP     4206.5   -72.05
541300 [POSTOAK2    69.000] AMP     5002.3   -70.75
541304 [URICHTP2    69.000] AMP     2943.3   -64.12
541308 [NEVADA 2    69.000] AMP     4351.6   -82.10
541315 [NWARSAW2    69.000] AMP     4005.4   -81.21
541340 [BELTONS5    161.00] AMP    19830.1   -84.22
541347 [RAYMORE     69.000] AMP     8514.5   -81.87
541382 [HONEYWL5    161.00] AMP    21983.8   -82.97
542978 [CRAIG  5    161.00] AMP    39838.9   -85.73
542996 [MIDTOWN5    161.00] AMP    33078.2   -84.76
542997 [LEEDS  5    161.00] AMP    31717.1   -85.02
543007 [SWOPE S5    161.00] AMP    19585.8   -84.50
```

```
543035 [TOMHAWK5    161.00] AMP    23392.1   -83.54
543043 [MURLEN 5    161.00] AMP    18125.7   -84.25
543045 [SWITZER5    161.00] AMP    18209.6   -84.05
543048 [COLLEGE5    161.00] AMP    28141.7   -84.71
543049 [CEDRCRK5    161.00] AMP    27774.7   -84.96
543054 [CEDARNL5    161.00] AMP    13672.1   -84.61
543069 [PAOLA  5    161.00] AMP     9980.4   -83.14
543077 [PLSTVAL5    161.00] AMP     9772.5   -83.34
543105 [BULLCRK5    161.00] AMP    25132.9   -87.11
543132 [BNSF   5    161.00] AMP    20031.4   -85.74
548808 [ECKLES-161  161.00] AMP    25532.8   -83.06
```

GEN-2017-109:

```
                              PSS®E-32.2.0 ASCC SHORT CIRCUIT CURRENTS
TUE, OCT 31 2017  17:14
2015 MDWG FINAL WITH 2013 MMWG, UPDATED WITH 2014 SERC & MRO
MDWG 17S WITH MMWG 15S, MRO 16W TOPO/16S PROF, SERC 16S

OPTIONS USED:
    - FLAT CONDITIONS
         - BUS VOLTAGES SET TO 1 PU AT 0 PHASE ANGLE
         - GENERATOR P=0, Q=0
         - TRANSFOMRER TAP RATIOS=1.0 PU and PHASE ANGLES=0.0
         - LINE CHARGING=0.0 IN +/-/0 SEQUENCE
         - LOAD=0.0 IN +/- SEQUENCE, CONSIDERED IN ZERO SEQUENCE
         - LINE/FIXED/SWITCHED SHUNTS=0.0 AND MAGNETIZING ADMITTANCE=0.0
IN +/-/0 SEQUENCE
         - DC LINES AND FACTS DEVICES BLOCKED
         - TRANSFORMER ZERO SEQUENCE IMPEDANCE CORRECTIONS IGNORED

                                     THREE PHASE FAULT
X---------- BUS ----------X             /I+/    AN(I+)
917109 [G17109_T(P) 230.00] AMP     5524.9   -83.94
652111 [COALHILL4   230.00] AMP     2743.2   -84.14
652403 [DAWSONC4    230.00] AMP     5825.7   -83.88
917119 [G17_109     230.00] AMP     5406.5   -82.77
652404 [DAWSONC7    115.00] AMP     9248.2   -83.65
652405 [FTPECK 4    230.00] AMP     2719.1   -84.23
652411 [MI CTYE4    230.00] AMP     3041.4   -83.43
652616 [BEAVERHILL4 230.00] AMP     4499.7   -83.79
585340 [GEN-2015-098230.00] AMP     4389.4   -83.44
652401 [CIRCLE 7    115.00] AMP     2279.1   -69.24
652406 [FTPECK 7    115.00] AMP     3984.6   -83.15
652407 [FALLON 7    115.00] AMP     3340.5   -78.06
652412 [MI CTYE7    115.00] AMP     4121.7   -84.04
652413 [MEDORA 4    230.00] AMP     5262.8   -84.02
661004 [BAKER  4    230.00] AMP     3247.1   -83.42
661032 [GLENDCT7    115.00] AMP     6860.4   -80.83
661056 [LEWIS  7    115.00] AMP     5724.9   -80.03
652121 [KPS12-CR7   115.00] AMP     2002.2   -70.92
652131 [KPS13-OF7   115.00] AMP     2382.8   -79.30
652213 [FALLON 8    69.000] AMP     1050.6   -86.36
652394 [TERRY TAP   115.00] AMP     2993.7   -77.77
```

```
652395 [SHIRLEY TAP 115.00] AMP     3149.0   -79.43
652409 [WOLFPT 7    115.00] AMP     3574.3   -78.47
652425 [BELFELD4    230.00] AMP     9151.9   -85.29
652451 [RICHLND7    115.00] AMP     5642.3   -78.76
652611 [KPS10-FP7   115.00] AMP     1402.6   -82.77
659265 [LTLMISS4    230.00] AMP     3386.8   -83.55
661005 [BAKER  7    115.00] AMP     3660.7   -82.96
661033 [CABINCR7    115.00] AMP     3214.3   -79.18
910007 [G12_012IST  115.00] AMP     2541.9   -73.10
652417 [DICKNSN4    230.00] AMP     6625.8   -83.91
652424 [BELFELD3    345.00] AMP     6546.5   -85.54
652651 [FAIRVIEW 7  115.00] AMP     4797.0   -75.45
659180 [KOCH   7    115.00] AMP     3889.4   -76.39
659263 [LTLMISS7    115.00] AMP     1825.8   -87.21
659266 [RHAME  4    230.00] AMP     4084.3   -83.95
659309 [S HEART    4230.00] AMP     9151.9   -85.29
659448 [HEARTRVR   4230.00] AMP     6242.3   -85.01
661034 [KPS14-BAK7  115.00] AMP     3313.1   -80.57
661075 [POPLAR 7    115.00] AMP     3115.4   -76.87

                              PSS®E-32.2.0 ASCC SHORT CIRCUIT CURRENTS
TUE, OCT 31 2017  17:14
2015 MDWG FINAL WITH 2013 MMWG, UPDATED WITH 2014 SERC & MRO
MDWG 2025S WITH MMWG 2024S, MRO & SERC 2025 SUMMER

OPTIONS USED:
    - FLAT CONDITIONS
         - BUS VOLTAGES SET TO 1 PU AT 0 PHASE ANGLE
         - GENERATOR P=0, Q=0
         - TRANSFOMRER TAP RATIOS=1.0 PU and PHASE ANGLES=0.0
         - LINE CHARGING=0.0 IN +/-/0 SEQUENCE
         - LOAD=0.0 IN +/- SEQUENCE, CONSIDERED IN ZERO SEQUENCE
         - LINE/FIXED/SWITCHED SHUNTS=0.0 AND MAGNETIZING ADMITTANCE=0.0
IN +/-/0 SEQUENCE
         - DC LINES AND FACTS DEVICES BLOCKED
         - TRANSFORMER ZERO SEQUENCE IMPEDANCE CORRECTIONS IGNORED

                                    THREE PHASE FAULT
X---------- BUS ----------X          /I+/    AN(I+)
917109 [G17109_T(P) 230.00] AMP     5528.9   -83.93
652111 [COALHILL4   230.00] AMP     2744.1   -84.13
652403 [DAWSONC4    230.00] AMP     5831.7   -83.87
917119 [G17_109     230.00] AMP     5410.0   -82.75
652404 [DAWSONC7    115.00] AMP     9257.4   -83.63
652405 [FTPECK 4    230.00] AMP     2720.0   -84.22
652411 [MI CTYE4    230.00] AMP     3043.0   -83.43
652616 [BEAVERHILL4 230.00] AMP     4504.8   -83.78
585340 [GEN-2015-098230.00] AMP     4394.2   -83.43
652401 [CIRCLE 7    115.00] AMP     2279.7   -69.23
652406 [FTPECK 7    115.00] AMP     3986.3   -83.14
652407 [FALLON 7    115.00] AMP     3341.5   -78.05
652412 [MI CTYE7    115.00] AMP     4123.0   -84.03
652413 [MEDORA 4    230.00] AMP     5275.0   -84.01
661004 [BAKER  4    230.00] AMP     3249.5   -83.41
```

```
661032 [GLENDCT7    115.00] AMP     6864.2   -80.82
661056 [LEWIS  7    115.00] AMP     5751.0   -79.93
652121 [KPS12-CR7   115.00] AMP     2002.6   -70.91
652131 [KPS13-OF7   115.00] AMP     2383.3   -79.30
652213 [FALLON 8    69.000] AMP     1050.7   -86.35
652394 [TERRY TAP   115.00] AMP     2994.5   -77.77
652395 [SHIRLEY TAP 115.00] AMP     3149.8   -79.42
652409 [WOLFPT 7    115.00] AMP     3576.9   -78.45
652425 [BELFELD4    230.00] AMP     9199.4   -85.27
652451 [RICHLND7    115.00] AMP     5673.4   -78.64
652611 [KPS10-FP7   115.00] AMP     1402.8   -82.77
659265 [LTLMISS4    230.00] AMP     3389.7   -83.54
661005 [BAKER  7    115.00] AMP     3661.8   -82.96
661033 [CABINCR7    115.00] AMP     3215.2   -79.17
910007 [G12_012IST  115.00] AMP     2542.7   -73.09
652417 [DICKNSN4    230.00] AMP     6655.3   -83.90
652424 [BELFELD3    345.00] AMP     6590.5   -85.51
652651 [FAIRVIEW 7  115.00] AMP     4844.8   -75.28
659180 [KOCH   7    115.00] AMP     3902.0   -76.31
659263 [LTLMISS7    115.00] AMP     1826.2   -87.21
659266 [RHAME  4    230.00] AMP     4089.4   -83.94
659309 [S HEART    4230.00] AMP     9199.4   -85.27
659448 [HEARTRVR   4230.00] AMP     6259.5   -84.99
661034 [KPS14-BAK7  115.00] AMP     3314.0   -80.57
661075 [POPLAR 7    115.00] AMP     3120.4   -76.84
```