FEASIBILITY CLUSTER STUDY FOR GENERATOR INTERCONNECTION REQUESTS

FCS-2017-001

Published on 05/24/2017

By SPP Generator Interconnections Dept.

REVISION HISTORY

DATE OR VERSION NUMBER	AUTHOR	CHANGE DESCRIPTION	COMMENTS
05/24/2017	SPP	Report Issued (FCS-2017-001).	

CONTENTS

Revision History i

1 Introduction 4

2 Model Development (Study Assumptions) 6

2.1 Interconnection Requests Included in the Cluster 6
2.2 Affected System Interconnection Request 6
2.3 Previously Queued Interconnection Requests 6
2.4 Development of Base Cases 6
2.5 Development of Analysis Cases 13

3 Identification of Network Constraints (System Performance) 15

3.1 Thermal Overloads 15
3.2 Voltage 15
3.3 Dynamic Stability 15
3.4 Upgrades Assigned 16

4 Determination of Cost Allocated Network Upgrades 17

4.1 Credits/Compensation for Amounts Advanced for Network Upgrades 17

5 Required Interconnection Facilities 18

5.1 Facilities Analysis 18
5.2 Environmental Review 19

6 Affected Systems Coordination 20

7 Power Flow Analysis 21

7.1 Power Flow Analysis Methodology 21
7.2 Power Flow Analysis 21

8 Power Flow Results 22

8.1 Cluster Scenario 22
8.2 Stand-Alone Scenario 25
8.3 Curtailment and System Reliability 26

9 Stability & Short Circuit Analysis 27

10 Conclusion 28

11 Appendices 29

11.1 A: Generation Interconnection Requests Considered for Impact Study 30
11.2 B: Prior-Queued Interconnection Requests 31
11.3 C: Study Groupings 32
11.4 D: Proposed Point of Interconnection One-Line Diagrams 33
11.5 E: Cost Allocation per Interconnection Request (Including Prior Queued Upgrades) 35
11.6 F: Cost Allocation per Proposed Study Network Upgrade 36
11.7 G: Power Flow Analysis (Constraints Requiring Transmission Reinforcement) 37
11.8 H: Power Flow Analysis (Other Constraints Not Requiring Transmission Reinforcement) 38
11.9 H-AS: Power Flow Analysis (Other Constraints Potentially requiring Affected System Mitigation) 39

11.10 I: Short Circuit Analysis 40

1 INTRODUCTION

Pursuant to the Southwest Power Pool (SPP) Open Access Transmission Tariff (OATT), SPP has conducted this Feasibility Cluster Study (FCS) for generation interconnection requests received during the FCS Queue Cluster Window, which closed on February 28, 2017. The customers will be referred to in this study as the FCS Interconnection Customers. This FCS analyzes the impact of interconnecting new generation totaling 43.2 MW to the SPP Transmission System. The interconnecting SPP Transmission Owners include:

- American Electric Power - West (AEPW)

The generation interconnection requests included in this System Impact Study are listed in Appendix A by queue number, amount, requested interconnection service type, area, requested interconnection point, proposed interconnection point, and the requested in-service date.

Within the study scope of the Feasibility Cluster Studies, each request was analyzed based on the following number of POI assumptions.

Table 1: POI Assumptions

Interconnection Requests	Number of POIs
GEN-2017-002	1 – primary, 1-secondary
GEN-2017-003	1 – primary

Three (3) scenario assumption analyses were conducted for the current study to account for all combinations of Point of Interconnections and their appropriate cluster groupings. Table 2 displays the three (3) analyses that were performed. Interconnection Requests dispatching is explained in further detail in the Model Development Section.

Table 2: Three (3) ERIS Analysis Assumptions

Scenario Number	Scenario Description	Interconnection Requests	Point of Interconnection (POI)
Scenario #1	Group 10 ERIS HVER & Group 10 NRIS	GEN-2017-002	Tap North Huntington - Reeves Rd. 161 kV
		GEN-2017-003	Tap Nekoosa Tap-Ashdown 69 kV
Scenario #2	Group 12 ERIS HVER & Group 12 NRIS	GEN-2017-002	Tap North Huntington - Reeves Rd. 161 kV
		GEN-2017-003	Tap Nekoosa Tap-Ashdown 69 kV
Scenario #3	Group 12 ERIS HVER & Group 12 NRIS	GEN-2017-002	Tap Midland REC-North Huntington 69 kV
		GEN-2017-003	Tap Nekoosa Tap-Ashdown 69 kV

The primary objective of this Feasibility Cluster Study is to identify the system constraints associated with connecting the generation to the area transmission system. The Feasibility and other subsequent Interconnection Studies are designed to identify attachment facilities, Network Upgrades and other Direct Assignment Facilities needed to accept power into the grid at each specific interconnection receipt point.

If any Interconnection Requests are withdrawn from the higher queued studies including DISIS-2016-001, then potential upgrades tentatively assigned to those Interconnection Requests may be assigned to the Interconnection Requests in this FCS-2017-001 study once these Interconnection Requests execute a Definitive Interconnection System Impact Study Agreement.

2 MODEL DEVELOPMENT (STUDY ASSUMPTIONS)

2.1 INTERCONNECTION REQUESTS INCLUDED IN THE CLUSTER

This FCS includes all interconnection requests that were submitted during the FCS Queue Cluster Window that met all of the requirements of the Generator Interconnection Procedures (GIP) that were in effect at the time this study commenced. Appendix A lists the interconnection requests that are included in this study.

2.2 AFFECTED SYSTEM INTERCONNECTION REQUEST

Affected System Interconnection Requests included in this study are listed in Appendix A with the "ASGI" prefix. Affected System Interconnection Requests were only studied in "cluster" scenarios.

2.3 PREVIOUSLY QUEUED INTERCONNECTION REQUESTS

The previous-queued requests included in this study are listed in Appendix B. In addition to the Base Case Upgrades, the previous-queued requests and associated upgrades were assumed to be in-service and added to the Base Case models. These requests were dispatched as Energy Resource Interconnection Service (ERIS) resources with equal distribution across the SPP footprint. Prior-queued requests that requested Network Resource Interconnection Service (NRIS) were also dispatched in separate NRIS scenarios sinking into the area of the interconnecting transmission owner.

2.4 DEVELOPMENT OF BASE CASES

2.4.1 POWER FLOW

The power flow models used for this study are based on the 2015-series Integrated Transmission Planning models used for the 2016 ITP-Near Term analysis. These models include:

- Year 1 2016 winter peak (16WP)
- Year 2 2017 spring (17G)
- Year 2 2017 summer peak (17SP)
- Year 5 2020 summer (20SP)
- Year 5 2020 winter peak (20WP)
- Year 10 2025 summer peak (25SP)

2.4.2 DYNAMIC STABILITY

Dynamic stability studies performed as part of the PISIS and DISIS Cluster Studies will provide additional guidance as to whether required reactive compensation can be static or a portion must be dynamic (such as a SVC).

2.4.3 SHORT CIRCUIT

Short circuit analysis is performed as part of the PISIS and DISIS Cluster Studies will provide additional guidance as to whether required reactive compensation can be static or a portion must be dynamic (such as a SVC).

2.4.4 BASE CASE UPGRADES

The facilities listed in the table below are part of the current SPP Transmission Expansion Plan, the Balanced Portfolio, or recently approved Priority Projects. These facilities have an approved Notification to Construct (NTC) or are in construction stages and were assumed to be in-service at the time of dispatch and added to the base case models. The DISIS Interconnection Customers have not been assigned advancement costs for the projects listed below.

The FCS Interconnection Customers' Generation Facilities in-service dates may need to be delayed until the completion of the following upgrades. In some cases, the in-service date is beyond the allowable time a customer can delay. If the requests proceed forward into the DISIS then in this case, the Interconnection Customer may move forward after the DISIS with Limited Operation or remain in the DISIS Queue for additional study cycles. If, for some reason, construction on these projects is discontinued, additional restudies will be needed to determine the interconnection needs of the Interconnection Customers during the DISIS.

SPP Notification to Construct (NTC) ID	Project Owner	Upgrade Name	Estimated Date of Upgrade Completion (EOC)
200223	OGE	Tatonga - Woodward District EHV 345 kV Ckt 2	7/1/2018
200223	OGE	Matthewson - Tatonga 345 kV Ckt 2	7/1/2018
200240	OGE	Chisholm - Gracemont 345 kV Ckt 1 (OGE)	3/1/2018
200255	AEP	Chisholm - Gracemont 345kV Ckt 1 (AEP)	3/1/2018
200255	AEP	Chisholm 345/230 kV Substation	3/1/2018
200255	AEP	Chisholm 230 kV	3/1/2018
200360	SPS	IMC #1 Tap - Livingston Ridge 115 kV Ckt 1 Rebuild	11/16/2018
200360	SPS	Intrepid West - Potash Junction 115 kV Ckt 1 Rebuild	11/16/2018
200360	SPS	IMC #1 Tap - Intrepid West 115 kV Ckt 1 Rebuild	11/16/2018
200360	SPS	Cardinal - Targa 115 kV Ckt 1 Rebuild	5/31/2018
200360	SPS	National Enrichment Plant - Targa 115 kV Ckt 1	8/15/2017
200391	OGE	DeGrasse 345 kV Substation	6/1/2017 (RTO Determined Need Date)
200391	OGE	DeGrasse 345/138 kV Transformer	6/1/2017 (RTO Determined Need Date)
200391	OGE	DeGrasse - Knob Hill 138 kV New Line	6/1/2017 (RTO Determined Need Date)
200391	OGE	DeGrasse 138 kV Substation (OGE)	6/1/2017 (RTO Determined Need Date)
200220	NPPD	Cherry Co. (Thedford) - Gentleman 345 kV Ckt 1	10/1/2019
200220	NPPD	Cherry Co. (Thedford) Substation 345 kV	10/1/2019
200220	NPPD	Cherry Co. (Thedford) - Holt Co. 345 kV Ckt 1	10/1/2019
200220	NPPD	Holt Co. Substation 345 kV	10/1/2019
200253	NPPD	Neligh 345/115 kV Substation	6/1/2017

SPP Notification to Construct (NTC) ID	Project Owner	Upgrade Name	Estimated Date of Upgrade Completion (EOC)
200309	SPS	Hobbs 345/230 kV Ckt 1 Transformer	6/1/2018
200309	SPS	Hobbs - Yoakum 345 kV Ckt 1	6/1/2020
200395	SPS	Tuco - Yoakum 345 kV Ckt 1	6/1/2020
200395	SPS	Yoakum 345/230 kV Ckt 1 Transformer	6/1/2020
200256	SPS	Chaves - Price 115 kV Ckt 1 Rebuild	12/30/2017
200256	SPS	CV Pines - Price 115 kV Ckt 1 Rebuild	12/30/2017
200256	SPS	Capitan - CV Pines 115 kV Ckt 1 Rebuild	12/30/2017
200282	SPS	China Draw - Yeso Hills 115 kV Ckt 1	6/1/2018
200282	SPS	Dollarhide - Toboso Flats 115 kV Ckt 1	6/1/2018
200309	SPS	Hobbs - Kiowa 345 kV Ckt 1	6/1/2018
200309	SPS	Kiowa 345 kV Substation	6/1/2018
200309	SPS	Kiowa - North Loving 345 kV Ckt 1	6/1/2018
200309	SPS	North Loving 345 kV Terminal Upgrades	6/1/2018
200309	SPS	China Draw - North Loving 345 kV Ckt 1	6/1/2018
200309	SPS	China Draw 345 kV Ckt 1 Terminal Upgrades	6/1/2018
200309	SPS	China Draw 345/115 kV Ckt 1 Transformer	6/1/2018
200309	SPS	North Loving 345/115 kV Ckt 1 Transformer	6/1/2018
200309	SPS	Kiowa 345/115 kV Ckt 1 Transformer	6/1/2018
200395	SPS	Livingston Ridge 115 kV Substation Conversion	8/31/2017
200411	SPS	Livingston Ridge - Sage Brush 115 kV Ckt 1	6/1/2018
200309	SPS	Sage Brush 115 kV Substation	12/16/2016
200309	SPS	Largarto - Sage Brush 115 kV Ckt 1	12/15/2016
200309	SPS	Lagarto 115 kV Substation	6/1/2018
200309	SPS	Cardinal - Lagarto 115 kV Ckt 1	12/15/2016
200309	SPS	Cardinal 115 kV Substation	12/15/2016
200411	SPS	Ponderosa - Ponderosa Tap 115 kV Ckt 1	6/1/2017
20097	TSMO	Sibley - Mullin Creek 345 kV	12/31/2016
200365	SPS	South Jal - Teague 115kV CKT 1 Rebuild/Re-conductor	6/1/2021
200365	SPS	Teague - National Enrichment Plant 115kV CKT 1	6/1/2018
20097	TSMO	Nebraska City - Mullin Creek 345 kV (GMO)	12/31/2016
20098	OPPD	Nebraska City - Mullin Creek 345 kV (OPPD)	12/31/2016
200395	SPS	Canyon West – Dawn – Panda – Deaf Smith 115kV Ckt 1	12/15/2018
200369	SPS	Canyon East Sub – Randall County Interchange 115kV Ckt 1	12/31/2020
200359	SPS	Carlisle 230/115kV transformer replacement	12/31/2017
200309	SPS	Hobbs – Yoakum – TUCO 345kV project	6/1/2018
200395	SPS	Terry County – Wolfforth 115kV Ckt 1 terminal equipment replacement	6/1/2018
200391	OGE	DeGrasse 345/138kV project	6/1/2017
200396	WFEC	DeGrasse 345/138kV project	6/1/2017
200395	SPS	Harrington East – Potter 230kV Ckt 1 terminal equipment replacement	6/1/2019
200228	WERE	Viola 345/138kV project	6/1/2018
200228	MKEC	Viola 345/138kV project	6/1/2018
200395	SPS	Seminole 230/115kV transformer Ckt 1 & 2 replacement	5/15/2018
200262	SPS	Yoakum County Interchange 230/115kV transformer Ckt 1 & 2 replacement	6/1/2019

2.4.5 CONTINGENT UPGRADES

The following facilities do not yet have approval. These facilities have been assigned to higher-queued interconnection customers. These facilities have been included in the models for this study and are assumed to be in service. This list may not be all-inclusive. The FCS Interconnection Customers, at this time, do not have cost responsibility for these facilities but may later be assigned

cost if higher-queued customers terminate their Generation Interconnection Agreement or withdraw from the interconnection queue. The FCS Interconnection Customer Generation Facilities in-service dates may need to be delayed until the completion of the following upgrades.

Assigned Study	Upgrade Name	Estimated Date of Upgrade Completion (EOC)
DISIS-2010-002	Twin Church - Dixon County 230kV Conductor Clearance Increase	11/1/2018
DISIS-2010-002	Buckner - Spearville 345 kV Ckt 1 Upgrade Terminal Equipment	12/31/2017
DISIS-2011-001	Hoskins - Dixon County 230kV Conductor Clearance Increase	11/1/2018
DISIS-2011-001	Woodward EHV 138kV Phase Shifting Transformer circuit #1	6/1/2017
DISIS-2013-002	Antelope - County Line - 115kV Rebuild/Re-conductor	5/1/2017
DISIS-2013-002	Battle Creek - County Line 115kV Rebuild/Re-conductor	5/1/2017
DISIS-2014-002	Arnold-Ransom 115kV Ckt 1 Replace Terminal Equipment	11/25/2017
DISIS-2014-002	Ransom-Ness City 115kV Ckt 1 Replace Terminal Equipment	11/25/2017
DISIS-2014-002	Plant X - Tolk 230kV circuit #1 Rebuild	5/31/2018
DISIS-2014-002	Plant X - Tolk 230kV circuit #2 Rebuild	5/31/2018
DISIS-2014-002	TUCO Interchange 345/230kV transformer CKT 1 Replacement	6/1/2018
DISIS-2015-001	Kress Interchange – Swisher 115kV circuit #1 Replace Terminal Equipment	TBD
DISIS-2015-001	Oklaunion 345kV Reactive Power Support Install two (2) 130Mvar Capacitor Bank(s)	TBD
DISIS-2015-001	(NRIS Only) Potter County Interchange 345/230/13kV Transformer circuit #2 Build	TBD
DISIS-2015-001	(NRIS Only) Renfrow – Renfrow 138kV circuit #1 Replace Terminal Equipment	TBD
DISIS-2015-001	Build new 345/230kV substation along TUCO – Border 345kV and TUCO – Swisher 230kV. Tie in and Terminate TUCO 345kV, Border 345kV, TUCO 230kV, and Swisher 230kV at Crawfish Draw. Build 345/230/13kV transformer	TBD
DISIS-2015-002	Beaver County 345kV Reactive Power Support Install +100Mvar SVC at Beaver County Substation.	TBD
DISIS-2015-002	Border - Chisholm 345kV CKT 2	TBD
DISIS-2015-002	Border 345kV Reactive Power Support Install (6)Steps of 50Mvar Capacitor Bank(s) and +300Mvar SVC at Border Substation	TBD
DISIS-2015-002	Chisholm Substation Expansion 345kV	TBD
DISIS-2015-002	Cleo Corner - Cleo Plant Tap 138kV CKT 1 Replace Terminal Equipment	TBD
DISIS-2015-002	Cleveland - Silver City 138kV CKT 1 Conductor Clearance Increase	TBD
DISIS-2015-002	Cornville Tap - Naples Tap 138kV CKT 1 Rebuild	TBD
DISIS-2015-002	Crawfish Draw - Border 345kV CKT 2 Build	TBD
DISIS-2015-002	Daglum - Dickinson 230kV CKT 1 Build	TBD
DISIS-2015-002	Dickinson 230/115/13.8kV Transformer CKT 2 Build	TBD
DISIS-2015-002	Gavins Point - Yankton Junction 115kV CKT 1 Rebuild	TBD
DISIS-2015-002	GEN-2015-063 Tap - Mathewson 345kV CKT 1 Replace Structures	TBD
DISIS-2015-002	Grapevine - Nichols 230kV CKT 1	TBD
DISIS-2015-002	Grapevine - Wheeler 230kV CKT 1	TBD
DISIS-2015-002	Naples Tap - Payne 138kV CKT 1 Rebuild	TBD
DISIS-2015-002	Norge - Southwest Station 138kV CKT 1	TBD
DISIS-2015-002	Oklaunion 345kV Reactive Power Support Incremental Upgrade Install +/-100Mvar SVC at Oklaunion	TBD
DISIS-2015-002	Albion - Petersburg - North Petersburg 115kV CKT 1	TBD

Assigned Study	Upgrade Name	Estimated Date of Upgrade Completion (EOC)
DISIS-2015-002	Wheeler - Sweetwater 230kV CKT 1	TBD
DISIS-2015-002	Woodward 345/138/13kV Transformer CKT 3	TBD
DISIS-2016-001	Andrews 345/115/13kV Transformer CKT 1	TBD
DISIS-2016-001	Andrews 345/115/13kV Transformer CKT 2	TBD
DISIS-2016-001	Andrews Substation 230 to 345kV Voltage Conversion	TBD
DISIS-2016-001	Asarco Tap - Highland Park 115kV CKT 1 Replace Terminal Equipment	TBD
DISIS-2016-001	Banner County - Keystone 345kV CKT 1 Build	TBD
DISIS-2016-001	Bearcat - Mooreland 138kV CKT 1 Replace Terminal Equipment	TBD
DISIS-2016-001	Beaver County - Clark County 345kV CKT 1 Build	TBD
DISIS-2016-001	Beaver County - Grapevine 345kV CKT 1 Build	TBD
DISIS-2016-001	BEPC Laramie Stability Limit Mitigaiton	TBD
DISIS-2016-001	Bismark - Hilken 230kV CKT 1 Rebuild/Re-conductor	TBD
DISIS-2016-001	Broadland – Split Rock 345kV CKT 1 Build	TBD
DISIS-2016-001	Broadland 345/230/13kV Transformer CKT 2 Build	TBD
DISIS-2016-001	Bushland - Potter County 230kV CKT 1 Replace Terminal Equipment	TBD
DISIS-2016-001	Caney River - Neosho 345kV CKT 1 Replace Terminal Equipment	TBD
DISIS-2016-001	Cleveland - Tulsa 345kV CKT 1 Replace Terminal Equipment	TBD
DISIS-2016-001	Crawfish Draw - Seminole 765kV CKT 1 Build	TBD
DISIS-2016-001	Crawfish Draw - TUCO 345kV CKT 2 Build	TBD
DISIS-2016-001	Crawfish Draw - Yoakum 345kV Re-termination	TBD
DISIS-2016-001	Crawfish Draw 765/345kV Transformer CKT 1 & 2 Build	TBD
DISIS-2016-001	Crawfish Draw 765kV Substation Expansion	TBD
DISIS-2016-001	DeGrasse - Rose Valley 138kV CKT 1 Replace Terminal Equipment	TBD
DISIS-2016-001	Drinkard - Drinkard Tap 115kV CKT 1 Rebuild	TBD
DISIS-2016-001	Drinkard Tap - Weest Hobbs 115kV CKT 1 Rebuild	TBD
DISIS-2016-001	Farber - Belle Plains 138kV CKT 1 Rebuild	TBD
DISIS-2016-001	GEN-2009-001IS - Groton 345kV CKT 1 Replace Terminal Equipment	TBD
DISIS-2016-001	GEN-2009-001IS - Watertown 345kV CKT 1 Replace Terminal Equipment	TBD
DISIS-2016-001	GEN-2014-074 Tap 345kV Reactive Power Support Build	TBD
DISIS-2016-001	GEN-2016-012 Tap - LaCygne 345kV CKT 1 Rebuild	TBD
DISIS-2016-001	GEN-2016-012 Tap - Waverly Tap 345kV CKT 1 Replace Terminal Equipment	TBD
DISIS-2016-001	GEN-2016-044 Tap - Emmons 345kV CKT 1 Build	TBD
DISIS-2016-001	GEN-2016-044 Tap - Groton 345kV CKT 2 Build	TBD
DISIS-2016-001	Gerald Gentleman Station Flowgate Stability Limit Mitigation	TBD
DISIS-2016-001	Grapevine - Chisholm 345kV CKT 1 Build	TBD
DISIS-2016-001	Grapevine Substation 345kV Build	TBD
DISIS-2016-001	Harrington West - Harrington Mid Bus 230kV CKT 1 Upgrade bus tie	TBD
DISIS-2016-001	Harrington West - Potter County 230kV CKT 1 Rebuild/Re-conductor	TBD
DISIS-2016-001	Hereford Capacitor Bank Build	TBD
DISIS-2016-001	Highland Park Tap - Pantex South 115kV CKT 1 Replace Terminal Equipment	TBD
DISIS-2016-001	Hobbs - GEN-2014-012 Tap - Andrews Voltage Conversion	TBD
DISIS-2016-001	Hunter - Woodring 345kV CKT 1 Replace Terminal Equipment	TBD
DISIS-2016-001	Keystone - Gentleman 345kV CKT 2 Build	TBD
DISIS-2016-001	Kildare - White Eagle 138kV CKT 1 Rebuild/Re-conductor	TBD
DISIS-2016-001	Kinsley - Pawnee 115kV CKT 1 Conductor Clearance Increase	TBD
DISIS-2016-001	Kinze - McElroy 138kV CKT 1 Rebuild/Re-conductor	TBD
DISIS-2016-001	Knoll - Post Rock 230kV CKT 2 Build	TBD

Assigned Study	Upgrade Name	Estimated Date of Upgrade Completion (EOC)
DISIS-2016-001	Martin - Pantex North 115kV CKT 1 Replace Terminal Equipment	TBD
DISIS-2016-001	Mathewson - Northwest 345kV CKT 1 Replace Terminal Equipment	TBD
DISIS-2016-001	Middleton Tap - Chilocco 138kV CKT 1 Rebuild/Re-conductor	TBD
DISIS-2016-001	National Enrichment Plant - Drinkard 115kV CKT 1 Rebuild/Re-conductor	TBD
DISIS-2016-001	Neosho - Riverton 161kV CKT 1 Rebuild/Re-conductor	TBD
DISIS-2016-001	Northwest - Spring Creek 345kV CKT 1 Replace Terminal Equipment	TBD
DISIS-2016-001	Oklaunion 345kV Reactive Power Support Incremental Upgrade #2 Increase 100Mvar SVC to 300Mvars	TBD
DISIS-2016-001	Osage - Webb Tap 138kV CKT 1 Rebuild/Re-conductor	TBD
DISIS-2016-001	Osage - White Eagle 138kV CKT 1 Rebuild/Re-conductor	TBD
DISIS-2016-001	Pauline - Rosemont 115kV CKT 1 Rebuild/Re-conductor	TBD
DISIS-2016-001	Pauline - Rosemont 115kV CKT 2 Build	TBD
DISIS-2016-001	Potter County - Grapevine 345kV CKT 1 Build	TBD
DISIS-2016-001	Seminole 765/345kV Transformer CKT 1 & 2 Build	TBD
DISIS-2016-001	Seminole 765kV Substation Expansion	TBD
DISIS-2016-001	Split Rock - White 345kV CKT 1 Replace Terminal Equipment	TBD
DISIS-2016-001	Tolk - Crawfish Draw 345kV CKT 1 Build	TBD
DISIS-2016-001	Tolk - Potter County 345kV CKT 1 Build	TBD
DISIS-2016-001	Tolk 345/230/13kV Transformer CKT 2	TBD
DISIS-2016-001	Viola 345/138/13kV Transformer CKT 2 Build	TBD
DISIS-2016-001	Watertown - White 345kV CKT 1 Upgrade Terminal Equipment	TBD
DISIS-2016-001	Watertown 345/230/13kV Transformer CKT 1 Replacement	TBD
DISIS-2016-001	Wolf Creek - Neosho 345kV CKT 1 Build	TBD
DISIS-2016-001	Wolf Creek Generation Plant Studies and Agreements	TBD
DISIS-2016-001	(NRIS Only) Altoona - Bulter 138kV CKT 1 Rebuild/Re-conductor	TBD
DISIS-2016-001	(NRIS Only) Belden - Hartington 115kV CKT 1 Rebuild/Re-conductor	TBD
DISIS-2016-001	(NRIS Only) Bethel - Broken Bow 138kV CKT 1 Rebuild/Re-conductor	TBD
DISIS-2016-001	(NRIS Only) Bristol - Summit 115kV CKT 1 Rebuild/Re-conductor	TBD
DISIS-2016-001	(NRIS Only) Carlisle - LP-Doud 115kV CKT 1 Rebuild/Re-conductor	TBD
DISIS-2016-001	(NRIS Only) Clayton - Nashoba 138kV CKT 1 Rebuild/Re-conductor	TBD
DISIS-2016-001	(NRIS Only) Cleveland - Cleveland 138kV CKT Z1 Replace Bus Tie	TBD
DISIS-2016-001	(NRIS Only) Cleveland 345/138/13kV Transformer CKT 2 Build	TBD
DISIS-2016-001	(NRIS Only) Clinton Junction - Elk City 138kV CKT 1 Rebuild/Re-conductor	TBD
DISIS-2016-001	(NRIS Only) Columbus East 230/115/13kV CKT 1 Replacement	TBD
DISIS-2016-001	(NRIS Only) Cox Interchange - Hale County 115kV CKT 1 Rebuild/Re-conductor	TBD
DISIS-2016-001	(NRIS Only) Crete - Friend 115kV CKT 1 Rebuild/Re-conductor	TBD
DISIS-2016-001	(NRIS Only) Denver - ShellC2 115kV CKT 1 Rebuild/Re-conductor	TBD
DISIS-2016-001	(NRIS Only) Denver South - San Andres Tap 115kV CKT 1 Rebuild/Re-conductor	TBD
DISIS-2016-001	(NRIS Only) Eagle - Pahoja 230kV CKT 1 Upgrade Terminal Equipment	TBD
DISIS-2016-001	(NRIS Only) East Plant Interchange - Harrintong Station 230kV CKT 1 Upgrade Terminal Equipment	TBD
DISIS-2016-001	(NRIS Only) East Plant 230/115/13kV Transformer CKT 2 Build	TBD
DISIS-2016-001	(NRIS Only) Eddy County 230/115/13kV Transformer CKT 3 Build	TBD
DISIS-2016-001	(NRIS Only) Fairbury - GEN-2015-087 Tap 115kV CKT 1 Rebuild/Re-conductor	TBD
DISIS-2016-001	(NRIS Only) Fairbury - Harbine 115kV CKT 1 Rebuild/Re-conductor	TBD

Assigned Study	Upgrade Name	Estimated Date of Upgrade Completion (EOC)
DISIS-2016-001	(NRIS Only) Fairfax Tap - Shidler 138kV CKT 1 Rebuild/Re-conductor	TBD
DISIS-2016-001	(NRIS Only) Fargo - Sheynne 230kV CKT 1 Rebuild/Re-conductor	TBD
DISIS-2016-001	(NRIS Only) Fort Randall - Sioux City 230kV CKT 1 Upgrade Terminal Equipment	TBD
DISIS-2016-001	(NRIS Only) Gavins Point - Hartington 115kV CKT 1 Rebuild/Re-conductor	TBD
DISIS-2016-001	(NRIS Only) GEN-2013-001 - Summit 115kV CKT 1 Upgrade Terminal Equipment	TBD
DISIS-2016-001	(NRIS Only) GEN-2015-079 Tap - Hobbs 230kV CKT 1 Upgrade Terminal Equipment	TBD
DISIS-2016-001	(NRIS Only) Glenham - Mound City 230kV CKT 1 Upgrade Terminal Equipment	TBD
DISIS-2016-001	(NRIS Only) Grand Island - Grand Praire 345kV CKT 1 Upgrade Terminal Equipment and Conductor Clearance Increase	TBD
DISIS-2016-001	(NRIS Only) Groton - Bristol 115kV CKT 1 Rebuild/Re-conductor	TBD
DISIS-2016-001	(NRIS Only) Harbine - Beatrice 115kV CKT 1 Rebuild/Re-conductor	TBD
DISIS-2016-001	(NRIS Only) Hobbs 230/115/13kV Transformer CKT 1 Replacement	TBD
DISIS-2016-001	(NRIS Only) Hugo - Valliant 138kV CKT 1 Upgrade Terminal Equipment	TBD
DISIS-2016-001	(NRIS Only) Jones - Lubbock Holly 230kV CKT 1 Upgrade Terminal Equipment	TBD
DISIS-2016-001	(NRIS Only) Kinze - Stillwater 138kV CKT 1 Upgrade Terminal Equipment	TBD
DISIS-2016-001	(NRIS Only) Litchfield - Asbury 161kV CKT 1 Rebuild/Re-conductor	TBD
DISIS-2016-001	(NRIS Only) LP-Doud - SP-Wolf 115kV CKT 1 Rebuild/Re-conductor	TBD
DISIS-2016-001	(NRIS Only) Lubbock Holly 230/69/13kV CKT 2 Build	TBD
DISIS-2016-001	(NRIS Only) Lubbock Milwaukee 230/69/13kV CKT 2 Build	TBD
DISIS-2016-001	(NRIS Only) Meadow Grove - Kelly 230kV CKT 1 Conductor Clearance Increase	TBD
DISIS-2016-001	(NRIS Only) Meadow Grove - North Petersburg 115kV CKT 1 Build	TBD
DISIS-2016-001	(NRIS Only) Meadow Grove 230/115/13kV Transformer CKT 1 Build	TBD
DISIS-2016-001	(NRIS Only) Mustang 230/115/13.2KV Transformer CKT 2 Build	TBD
DISIS-2016-001	(NRIS Only) Napa Junction - Utica 115kV CKT 1 Rebuild/Re-conductor	TBD
DISIS-2016-001	(NRIS Only) Napa Junction - Yankton Junction 115kV CKT 1 Rebuild/Re-conductor	TBD
DISIS-2016-001	(NRIS Only) Nashoba - Bethel 138kV CKT 1 Rebuild/Re-conductor	TBD
DISIS-2016-001	(NRIS Only) Pahoja - Sioux Falls 230kV CKT 1 Rebuild/Re-conductor	TBD
DISIS-2016-001	(NRIS Only) Plymouth - Sioux City 161kV CKT 1 Rebuild/Re-conductor	TBD
DISIS-2016-001	(NRIS Only) Rasmussen - Sioux City 230kV CKT 1 Upgrade Terminal Equipment	TBD
DISIS-2016-001	(NRIS Only) San Andres Tap - Seminole 115kV CKT 1 Rebuild/Re-conductor	TBD
DISIS-2016-001	(NRIS Only) Seminole 230/115/13kV Transformer CKT 1 Replacement	TBD
DISIS-2016-001	(NRIS Only) Seminole 230/115/13kV Transformer CKT 2 Replacement	TBD
DISIS-2016-001	(NRIS Only) ShellC2 - ShellC2 Tap 115kV CKT 1 Rebuild/Re-conductor	TBD
DISIS-2016-001	(NRIS Only) Sioux City - Split Rock 345kV CKT 1 Upgrade Terminal Equipment	TBD
DISIS-2016-001	(NRIS Only) Sioux City 230/161/13kV Transformer CKT 1 Replacement	TBD
DISIS-2016-001	(NRIS Only) Sioux City 230/161/13kV Transformer CKT 2 Replacement	TBD
DISIS-2016-001	(NRIS Only) SP-Wolf - Yuma 115kV CKT 1 Rebuild/Re-conductor	TBD
DISIS-2016-001	(NRIS Only) Sundown 230/115/13.2KV Transformer CKT 2 Build	TBD

Assigned Study	Upgrade Name	Estimated Date of Upgrade Completion (EOC)
DISIS-2016-001	(NRIS Only) Tupelo - Tupleo Tap 138kV CKT 1 Upgrade Terminal Equipment	TBD
DISIS-2016-001	(NRIS Only) Wadsworth 230/69/13kV CKT 2 Build	TBD
DISIS-2016-001	(NRIS Only) Webb City Tap - Fairfax Tap 138kV CKT 1 Rebuild/Re-conductor	TBD
DISIS-2016-001	(NRIS Only) Wichita 345/230/13kV Transformer CKT 1 Replacement	TBD
DISIS-2016-001	(NRIS Only) Wichita 345/230/13kV Transformer CKT 2 Replacement	TBD
DISIS-2016-001	(NRIS Only) Wolfforth Interchange 230/115/13kV Transformer CKT 1 Replacement	TBD

2.4.6 POTENTIAL UPGRADES NOT IN THE BASE CASE

Any potential upgrades that do not have a Notification to Construct (NTC) and are not explicitly listed within this report have not been included in the base case. These upgrades include any identified in the SPP Extra-High Voltage (EHV) overlay plan, or any other SPP planning study other than the upgrades listed above in the previous section.

2.4.7 REGIONAL GROUPINGS

The interconnection requests listed in Appendix A are grouped into two (2) active regional groups based on geographical and electrical impacts. These groupings are shown in Appendix C.

To determine interconnection impacts, six (6) different generation dispatch scenarios of the spring, summer, and winter base case models are developed to accommodate the regional groupings.

2.5 DEVELOPMENT OF ANALYSIS CASES

2.5.1 POWER FLOW

For Variable Energy Resources (VER) (solar/wind) in each power flow case, Energy Resource Interconnection Service (ERIS), is evaluated for the generating plants within a geographical area of the interconnection request(s) for the VERs dispatched at 100% nameplate of maximum generation. The VERs in the remote areas are dispatched at 20% nameplate of maximum generation. These projects are dispatched across the SPP footprint using load factor ratios.

Peaking units are not dispatched in the spring case, or in the "High VER" summer and winter peak cases. To study peaking units' impacts, the Year 1 winter peak and Year 2 summer peak, Year 5 summer and winter peaks, and Year 10 summer peak models are developed with peaking units dispatched at 100% of the nameplate rating and VERs dispatched at 20% of the nameplate rating. Each interconnection request is also modeled separately at 100% nameplate for certain analyses.

All generators (VER and peaking) that requested Network Resource Interconnection Service (NRIS) are dispatched in an additional analysis into the interconnecting Transmission Owner's (T.O.) area at 100% nameplate with Energy Resource Interconnection Service (ERIS) only requests at 80%

nameplate. This method allows for identification of network constraints that are common between regional groupings to have affecting requests share the mitigating upgrade costs throughout the cluster.

2.5.2 DYNAMIC STABILITY

Dynamic stability studies performed as part of the PISIS and DISIS Cluster Studies will provide additional guidance as to whether required reactive compensation can be static or a portion must be dynamic (such as a SVC).

2.5.3 SHORT CIRCUIT

Short circuit analysis is performed as part of the PISIS and DISIS Cluster Studies will provide additional guidance as to whether required reactive compensation can be static or a portion must be dynamic (such as a SVC).

3 IDENTIFICATION OF NETWORK CONSTRAINTS (SYSTEM PERFORMANCE)

3.1 THERMAL OVERLOADS

Network constraints are found by using PSS/E MUST First Contingency Incremental Transfer Capability (FCITC) analysis on the entire cluster grouping dispatched at the various levels previously described.

For Energy Resource Interconnection Service (ERIS), thermal overloads are determined for system intact (n-0) greater than 100% of Rate A - normal and for contingency (n-1) greater than 100% of Rate B – emergency conditions.

The overloads are then screened to determine which interconnection requests have at least

- 3% Distribution Factor (DF) for system intact conditions (n-0),
- 20% DF upon outage-based conditions (n-1),
- or 3% DF on contingent elements that resulted in a non-converged solution.

Appropriate transmission reinforcements are identified to mitigate the constraints.

Interconnection Requests that requested Network Resource Interconnection Service (NRIS) are also studied in a separate NRIS analysis to determine if any constraint measured greater than or equal to a 3% DF. If so, these constraints are also assigned transmission reinforcements to mitigate the impacts.

3.2 VOLTAGE

Steady State Voltage analysis is performed as part of the PISIS and DISIS Cluster Studies will provide additional guidance as to whether required reactive compensation. Monitored facilities and transmission reinforcement criteria for this analysis will be provided during the PISIS and/or DISIS report

3.3 DYNAMIC STABILITY

Dynamic stability studies performed as part of the PISIS and DISIS Cluster Studies will provide additional guidance as to whether required reactive compensation can be static or a portion must be dynamic (such as a SVC). During the PISIS and/or DISIS Stability issues are considered for transmission reinforcement under ERIS. Generators that fail to meet low voltage ride-through requirements (FERC Order #661-A) or SPP's stability criteria for damping or dynamic voltage recovery are assigned upgrades such that these requirements can be met.

3.4 UPGRADES ASSIGNED

Thermal overloads that require transmission support to mitigate are discussed in Section 8 and listed in Appendix G. All of these upgrades are cost assigned in Appendix E and Appendix F.

Other network constraints not requiring transmission reinforcements are shown in Appendix H. With a defined source and sink in a Transmission Service Request, this list of network constraints can be refined and expanded to account for all Network Upgrade requirements for firm transmission service.

In no way does the list of constraints in Appendix G identify all potential constraints that guarantee operation for all periods of time. It should be noted that although this study analyzed many of the most probable contingencies, it is not an all-inclusive list and cannot account for every operational situation. Because of this, it is likely that the Customer(s) may be required to reduce their generation output to 0 MW, also known as curtailment, under certain system conditions to allow system operators to maintain the reliability of the transmission network.

4 DETERMINATION OF COST ALLOCATED NETWORK UPGRADES

Cost Allocated Network Upgrades of Variable Energy Resources (VER) (solar/wind) generation interconnection requests are determined using the Year 2 spring model. Cost Allocated Network Upgrades of peaking units are determined using the Year 5 summer peak model. A PSS/E and MUST sensitivity analysis is performed to determine the Distribution Factors (DF), a distribution factor with no contingency that each generation interconnection request has on each new upgrade. The impact each generation interconnection request has on each upgrade project is weighted by the size of each request. Finally, the costs due by each request for a particular project are then determined by allocating the portion of each request's impact over the impact of all affecting requests.

For example, assume that there are three Generation Interconnection requests, X, Y, and Z that are responsible for the costs of Upgrade Project '1'. Given that their respective PTDF for the project have been determined, the cost allocation for Generation Interconnection request 'X' for Upgrade Project 1 is found by the following set of steps and formulas:

Determine an impact factor for a given project for all responsible GI requests:

$$Request\ X\ Impact\ Factor\ on\ Upgrade\ Project\ 1 = PTDF(\%)(X) \times MW(X) = X1$$

$$Request\ Y\ Impact\ Factor\ on\ Upgrade\ Project\ 1 = PTDF(\%)(Y) \times MW(Y) = Y1$$

$$Request\ Z\ Impact\ Factor\ on\ Upgrade\ Project\ 1 = PTDF(\%)(Z) \times MW(Z) = Z1$$

Determine each request's Allocation of Cost for that particular project:

$$Request\ X's\ Project\ 1\ Cost\ Allocation\ (\$) = \frac{Network\ Upgrade\ Project\ 1\ Cost\ (\$) \times X1}{X1 + Y1 + Z1}$$

Repeat previous for each responsible GI request for each Project.

The cost allocation of each needed Network Upgrade is determined by the size of each request and its impact on the given project. This allows for the most efficient and reasonable mechanism for sharing the costs of upgrades.

4.1 CREDITS/COMPENSATION FOR AMOUNTS ADVANCED FOR NETWORK UPGRADES

Interconnection Customer shall be entitled to either credits or potentially incremental Long Term Congestion Rights (iLTCR), otherwise known as compensation, in accordance with Attachment Z2 of the SPP Tariff for any Network Upgrades, including any tax gross-up or any other tax-related payments associated with the Network Upgrades, and not refunded to the Interconnection Customer.

5 REQUIRED INTERCONNECTION FACILITIES

The requirement to interconnect the requested generation into the existing and proposed transmission systems in the affected areas of the SPP transmission footprint consist of the necessary cost allocated shared facilities listed in Appendix F by upgrade. The interconnection requirements for the cluster total are listed in **Table 3**, not including the following costs.

- **Costs Not Included** – Costs on Affected Systems for Associated Electric Cooperative Inc. (AECI), Mid-Continent Independent System Operator (MISO), and Minnkota Power Cooperative, Inc (MPC). Impacts to affected systems will be coordinated with the Affected System operators if the Interconnection Request(s) enter into the Definitive Interconnection System Impact Study (DISIS) Queue. Constraints identified to affected system during this analysis are in Appendix H-AS.
- **Costs Not Included** –Potential upgrades required for AC voltage mitigation or transient stability analysis upgrade mitigations. Impacts to AC voltage and transient stability analysis will be performing during the Preliminary Interconnection System Impact Study (PISIS) or DISIS Queue.

Table 3: Total Cluster Costs per POI Scenario

Scenario Number		Total Estimated Minimum Cost
Scenario 1	GEN-2017-002 (P) GEN-2017-003	$6,000,000
Scenario 2	GEN-2017-002 (P) GEN-2017-003	$6,000,000
Scenario 3	GEN-2017-002 (S) GEN-2017-003	$4,000,000

Interconnection Facilities specific to each interconnection request are listed in Appendix E. A preliminary one-line diagram for each request is listed in Appendix D.

For an explanation of how required Network Upgrades and Interconnection Facilities were determined, refer to the section on "Identification of Network Constraints."

5.1 FACILITIES ANALYSIS

If requests proceed to the DISIS queue, the interconnecting Transmission Owner for each Interconnection Request will provide its preliminary analysis of required Transmission Owner Interconnection Facilities and the associated Network Upgrades, shown in Appendix D. This analysis will be limited only to the expected facilities to be constructed by the Transmission Owner at the Point of Interconnection.

5.2 ENVIRONMENTAL REVIEW

For Interconnection Requests that result in an interconnection to, or modification to, the transmission facilities of the Western-UGP, a National Environmental Policy Act (NEPA) Environmental Review will be required. The Interconnection Customer will be required to execute an Environmental Review Agreement per Section 8.6.1 of the GIP.

6 AFFECTED SYSTEMS COORDINATION

Impacts to affected systems will be coordinated with the Affected System operators if the Interconnection Request(s) enter into the DISIS Queue.

The following procedures are in place to coordinate with Affected Systems.

- Impacts on Associated Electric Cooperative Inc. (AECI) – For any observed violations of thermal overloads on AECI facilities, AECI has been notified by SPP to evaluate the violations for impacts on its transmission system. AECI has instructed SPP to notify the affected Interconnection Customers after posting of this study to contact AECI for an Affected System Study Agreement to study further impacts on the AECI system.
- Impacts on Mid Continent Independent System Operation (MISO) – Per SPP's agreement with MISO, MISO will be contacted and provided a list of interconnection requests that proceed to move forward into the Interconnection Facilities Study Queue. MISO will then evaluate the Interconnection Requests for impacts and will be in contact with affected Interconnection Customers. For potential impacts see Appendix H – Affected System.
- Impacts on Minnkota Power Cooperative, Inc (MPC) – MPC will be contacted and provided a list of interconnection requests that proceed to move forward into the Interconnection Facilities Study Queue. MP will then evaluate the Interconnection Requests for impacts. For potential impacts see Appendix H – Affected System.
- Impacts to other affected systems – For any observed violations of thermal overloads or voltage constraints, SPP will contact the owner of the facility for further information.

7 POWER FLOW ANALYSIS

7.1 POWER FLOW ANALYSIS METHODOLOGY

The Direct Current (DC) FCITC function of PSS® MUST was used to simulate single element and special (i.e., breaker-to-breaker, multi-element, etc.) contingencies in portions or all of the modeled control areas of SPP, as well as, other control areas external to SPP and the resulting scenarios analyzed. Single element and multi-element contingencies are evaluated.

7.2 POWER FLOW ANALYSIS

A power flow analysis is conducted for each Interconnection Customer's facility using modified versions of the Year 1 winter peak season, the Year 2 spring, Year 2 summer peak season, Year 5 summer and winter peak seasons, and Year 10 summer peak seasonal models. The output of the Interconnection Customer's facility is offset in each model by a reduction in output of existing online SPP generation. This method allows the request to be studied as an Energy Resource Interconnection Service request (ERIS). Certain requests that are also pursuing Network Resource Interconnection Service (NRIS) have an additional analysis conducted for displacing resources in the interconnecting Transmission Owner's balancing area.

8 POWER FLOW RESULTS

8.1 CLUSTER SCENARIO

The Cluster Scenario considers the Base Case as well as all Interconnection Requests in the DISIS Study Queue and all generating facilities (and with respect to (3) below, any identified Network Upgrades associated with such higher-queued interconnection) that, on the date the DISIS is commenced:

1. are directly connected to the Transmission System;
2. are interconnection to Affected Systems and may have an impact on the Interconnection Request;
3. have a pending higher-queued Interconnection Request to interconnect to the Transmission System; and
4. have no Interconnection Queue Position but have executed a GIA or requested that an unexecuted GIA be filed with FERC.

Constraints and associated mitigations for each Interconnection Request are summarized below. Details are contained in Appendix G. Cost allocation for the Cluster Scenario is found in Appendix E.

8.1.1 CLUSTER GROUP 1 (WOODWARD AREA)

In addition to the 7,023.9 MW of previously queued generation in the area, 0.0 MW of new interconnection service was studied. No new constraints were found in this area.

8.1.2 CLUSTER GROUP 2 (HITCHLAND AREA)

In addition to the 5,131.8 MW of previously queued generation in the area, 0.0 MW of new interconnection service was studied. No new constraints were found in this area.

8.1.3 CLUSTER GROUP 3 (SPEARVILLE AREA)

In addition to the 4,073.0 MW of previously queued generation in the area, 0.0 MW of new interconnection service was studied. No new constraints were found in this area.

8.1.4 CLUSTER GROUP 4 (NORTHWEST KANSAS AREA)

In addition to the 2,206.0 MW of previously queued generation in the area, 0.0 MW of new interconnection service was studied. No new constraints were found in this area.

8.1.5 CLUSTER GROUP 6 (SOUTH TEXAS PANHANDLE/NEW MEXICO AREA)

In addition to the 7,430.1 MW of previously queued generation in the area, 0.0 MW of new interconnection service was studied. No new constraints were found in this area.

8.1.6 CLUSTER GROUP 7 (SOUTHWESTERN OKLAHOMA AREA)

In addition to the 2,687.4 MW of previously queued generation in the area, 0.0 MW of new interconnection service was studied. No new constraints were found in this area.

8.1.7 CLUSTER GROUP 8 (NORTH OKLAHOMA/SOUTH CENTRAL KANSAS AREA)

In addition to the 10,466.2 MW of previously queued generation in the area, 0.0 MW of new interconnection service was studied. No new constraints were found in this area.

8.1.8 CLUSTER GROUP 9 (NEBRASKA AREA)

In addition to the 5,358.8 MW of previously queued generation in the area, 0.0 MW of new interconnection service was studied. No new constraints were found in this area.

8.1.9 CLUSTER GROUP 10 (SOUTHEAST OKLAHOMA/NORTHEAST TEXAS AREA)

In addition to the 132.0 MW of previously queued generation in the area, 21.6 MW of new interconnection service was studied. No new constraints were found in this area.

POI Scenario 01 Results

Table 8.1 Scenario 01 Group 10 Cluster ERIS Constraints

Monitored Element	Limiting Rate A/B (MVA)	TC %Loading (%MVA)	Contingency	Mitigation
			Currently none at this time	

Table 8.2 Scenario 01 Group 10 Cluster NRIS Constraints

Monitored Element	Limiting Rate A/B (MVA)	TC %Loading (%MVA)	Contingency	Mitigation
			Currently none at this time	

8.1.10 CLUSTER GROUP 12 (NORTHWEST ARKANSAS AREA)

In addition to the 65.0 MW of previously queued generation in the area, 21.6 MW of new interconnection service was studied. No new constraints were found in this area.

POI Scenario 02 Results

Table 8.3 Scenario 02 Group 12 Cluster ERIS Constraints

Monitored Element	Limiting Rate A/B (MVA)	TC %Loading (%MVA)	Contingency	Mitigation
			Currently none at this time	

Table 8.4 Scenario 02 Group 12 Cluster NRIS Constraints

Monitored Element	Limiting Rate A/B (MVA)	TC %Loading (%MVA)	Contingency	Mitigation
			Currently none at this time	

POI Scenario 03 Results

Table 8.5 Scenario 03 Group 12 Cluster ERIS Constraints

Monitored Element	Limiting Rate A/B (MVA)	TC %Loading (%MVA)	Contingency	Mitigation
			Currently none at this time	

Table 8.6 Scenario 03 Group 12 Cluster NRIS Constraints

Monitored Element	Limiting Rate A/B (MVA)	TC %Loading (%MVA)	Contingency	Mitigation
			Currently none at this time	

8.1.11 CLUSTER GROUP 13 (NORTHEAST KANSAS/NORTHWEST MISSOURI AREA)

In addition to the 779.1 MW of previously queued generation in the area, 0.0 MW of new interconnection service was studied. No new constraints were found in this area.

8.1.12 CLUSTER GROUP 14 (SOUTH CENTRAL OKLAHOMA AREA)

In addition to the 1,616.0 MW of previously queued generation in the area, 0.0 MW of new interconnection service was studied.

8.1.13 CLUSTER GROUP 15 (EASTERN SOUTH DAKOTA)

In addition to approximately 3,954.9 MW of previously queued generation in the area, 0.0 MW of new interconnection service was studied.

8.1.14 CLUSTER GROUP 16 (WESTERN NORTH DAKOTA)

In addition to approximately 4,432.3 MW of previously queued generation in the area, 0.0 MW of new interconnection service was studied.

8.1.15 CLUSTER GROUP 17 (WESTERN SOUTH DAKOTA)

In addition to approximately 533.9 MW of previously queued generation in the area, 0.0 MW of new interconnection service was studied.

8.1.16 CLUSTER GROUP 18 (EASTERN NORTH DAKOTA)

In addition to approximately 261.5 MW of previously queued generation in the area, 0.0 MW of new interconnection service was studied. No new constraints were found in this area.

8.2 STAND-ALONE SCENARIO

Not applicable to the FCS queue, however if requests proceed to the DISIS Queue the following Stand-Alone Scenario will be evaluated.

The Stand-Alone Scenario considers the Base Case as well as all generating facilities (and with respect to (3) below, any identified Network Upgrades associated with such higher-queued interconnection) that, on the date the DISIS is commenced:

1. are directly connected to the Transmission System;
2. are interconnection to Affected Systems and may have an impact on the Interconnection Request;
3. have a pending higher-queued Interconnection Request to interconnect to the Transmission System; and
4. have no Interconnection Queue Position but have executed a GIA or requested that an unexecuted GIA be filed with FERC.

8.3 CURTAILMENT AND SYSTEM RELIABILITY

In no way does this study guarantee operation for all periods of time. It should be noted that although this study analyzed many of the most probable contingencies, it is not an all-inclusive list and cannot account for every operational situation. Because of this, it is likely that the Customer(s) may be required to reduce their generation output to 0 MW, also known as curtailment, under certain system conditions to allow system operators to maintain the reliability of the transmission network.

9 STABILITY & SHORT CIRCUIT ANALYSIS

Stability is not applicable to the FCS queue. Short Circuit Analysis was performed for each generators POI. The Short Circuit Analyses results are in Appendix I: Short Circuit Analysis.

10 CONCLUSION

The minimum cost of interconnecting all new generation interconnection requests included in this Definitive Interconnection System Impact Study is listed in Table 4, not including the exceptions noted in Section 5.

Table 4 Total Cluster Costs per POI Scenario

Scenario Number	Total Estimated Minimum Cost
Scenario #1	$6,000,000
Scenario #2	$6,000,000
Scenario #3	$4,000,000

Allocated costs for Network Upgrades and Transmission Owner Interconnection Facilities are listed in Appendix E and F. For Interconnection Requests that result in an interconnection to, or modification of, the transmission facilities of the Western-UGP (WAPA), a National Environmental Policy Act (NEPA) Environmental Review will be required. The Interconnection Customer will be required to execute an Environmental Review Agreement per Section 8.6.1 of the GIP.

These costs do not include the cost of upgrades of other transmission facilities listed in Appendix H which are Network Constraints. These interconnection costs do not include any cost of any Network Upgrades that are identified as required through the short circuit analysis. Potential over-duty circuit breakers capability will be identified by the Transmission Owner in the Interconnection Facilities Study.

Further refinement of total estimated interconnection costs will be provided, should the Interconnection Customer meet the requirements for acceptance and choose to move into the Interconnection Facilities Study following the posting of this DISIS. The Interconnection Facilities Study may include additional study analysis, additional facility upgrades not yet identified by this DISIS, such as circuit breaker replacements and affected system facilities, and further refinement of existing cost estimates.

The required interconnection costs listed in Appendices E, and F, and other upgrades associated with Network Constraints do not include all costs associated with the deliverability of the energy to final customers. These costs are determined by separate studies if the Customer submits a Transmission Service Request (TSR) through SPP's Open Access Same Time Information System (OASIS) as required by Attachment Z1 of the SPP Open Access Transmission Tariff (OATT).

11 APPENDICES

11.1 A: GENERATION INTERCONNECTION REQUESTS CONSIDERED FOR IMPACT STUDY

A: Generation Interconnection Requests Considered for Study

Request	Amount	Service	Area	Requested Point of Interconnection	Proposed Point of Interconnection	Requested In-Service Date	In Service Date Delayed Until no earlier than*
GEN-2017-002	21.60	ER/NR	AEPW	Tap N Huntigton-Reeves 161kV / Tap Midland REC-N Huntington 69kV	Tap N Huntigton-Reeves 161kV / Tap Midland REC-N Huntington 69kV	12/31/2018	TBD
GEN-2017-003	21.60	ER/NR	AEPW	Tap Nekoosa Tap/Ashdown 69kV	Tap Nekoosa Tap/Ashdown 69kV	12/31/2018	TBD
Total:	**43.20**						

*In-Service Date for each request is to be determined after the Interconnection Facility Study is completed.

11.2 B: PRIOR-QUEUED INTERCONNECTION REQUESTS

B: Prior Queued Interconnection Requests

Request	Amount	Area	Requested/Proposed Point of Interconnection	Status or In-Service Date
ASGI-2010-006	150.00	AECI	Remington 138kV	AECI queue Affected Study
ASGI-2010-010	42.20	SPS	Lovington 115kV	Lea County Affected Study
ASGI-2010-020	30.00	SPS	Tap LE-Tatum - LE-Crossroads 69kV	Lea County Affected Study
ASGI-2010-021	15.00	SPS	Tap LE-Saunders Tap - LE-Anderson 69kV	Lea County Affected Study
ASGI-2011-001	27.30	SPS	Lovington 115kV	On-Line
ASGI-2011-002	20.00	SPS	Herring 115kV	On-Line
ASGI-2011-003	10.00	SPS	Hendricks 69kV	On-Line
ASGI-2011-004	20.00	SPS	Pleasant Hill 69kV	Under Study (DISIS-2011-002)
ASGI-2012-002	18.15	SPS	FE-Clovis Interchange 115kV	Under Study (DISIS-2012-002)
ASGI-2012-006	22.50	SUNCMKEC	Tap Hugoton - Rolla 69kV	Under Study (DISIS-2012-001)
ASGI-2013-001	11.50	SPS	PanTex South 115kV	Under Study (DISIS-2013-001)
ASGI-2013-002	18.40	SPS	FE Tucumcari 115kV	Under Study (DISIS-2013-001)
ASGI-2013-003	18.40	SPS	FE Clovis 115kV	Under Study (DISIS-2013-001)
ASGI-2013-004	36.60	SUNCMKEC	Morris 115kV	Under Study (DISIS-2013-002)
ASGI-2013-005	1.65	SPS	FE Clovis 115kV	Under Study (DISIS-2013-002)
ASGI-2013-006	2.00	SPS	SP-Erskine 115kV	
ASGI-2014-001	2.50	SPS	SP-Erskine 115kV	Under Study (DISIS-2014-001)
ASGI-2014-014	56.40	GRDA	Ferguson 69kV	Under Study (DISIS-2014-002)
ASGI-2015-001	6.13	SUNCMKEC	Ninnescah 115kV	Under Study (DISIS-2015-001)
ASGI-2015-002	2.00	SPS	SP-Yuma 69kV	Under Study (DISIS-2015-001)
ASGI-2015-004	56.36	GRDA	Coffeyville City 69kV	Under Study (DISIS-2015-001)
ASGI-2015-006	9.00	SWPA	Tupelo 138kV	Under Study (DISIS-2015-002)
ASGI-2016-001	2.50	SPS	Wolfforth 115kV	DISIS STAGE
ASGI-2016-002	0.35	SPS	Hurlwood 115kV	DISIS STAGE
ASGI-2016-003	6.00	KCPL		DISIS STAGE
ASGI-2016-004	9.60	SPS		DISIS STAGE
ASGI-2016-005	20.00	WAPA	Tap White Lake - Stickeny 69kV	Northwester Queued Request
ASGI-2016-006	20.00	WAPA	Mitchell	Northwester Queued Request
ASGI-2016-007	20.00	WAPA	Kimball 69kV	Northwester Queued Request
G176	100.00	XEL	Yankee 115kV	
G255	100.00	XEL	Yankee 115kV	MISO Queued Request
G380	150.00	OTP	Rugby 115kV	MISO Queued Request
G408	12.00	XEL	Tap McHenry - Souris 115kV	MISO Queued Request
G502	50.60	MP	Milton Young 230kV	MISO Queued Request
G586	30.00	XEL	Yankee 115kV	
G645	50.00	GRE	Ladish 115kV	MISO Queued Request
G723	10.00	MDU	Haskett 115kV	MISO Queued Request
G736	200.00	OTP	Big Stone South 230kV	
G752	150.00	MDU	Tap Bison - Hettinger 230kV	MISO Queued Request
G788	49.00	GRE	Ladish 115kV	MISO Queued Request
G830	99.00	GRE	GRE McHenry 115kV	MISO Queued Request
GEN-2001-014	96.00	WFEC	Ft Supply 138kV	On-Line
GEN-2001-026	74.30	WFEC	Washita 138kV	On-Line
GEN-2001-033	180.00	SPS	San Juan Tap 230kV	On-Line at 120MW
GEN-2001-036	80.00	SPS	Norton 115kV	On-Line
GEN-2001-037	100.00	OKGE	FPL Moreland Tap 138kV	On-Line

Request	Amount	Area	Requested/Proposed Point of Interconnection	Status or In-Service Date
GEN-2001-039A	105.00	SUNCMKEC	Shooting Star Tap 115kV	On-Line
GEN-2001-039M	100.00	SUNCMKEC	Central Plains Tap 115kV	On-Line
GEN-2002-004	200.00	WERE	Latham 345kV	On-Line at 150MW
GEN-2002-005	120.00	WFEC	Red Hills Tap 138kV	On-Line
GEN-2002-008	240.00	SPS	Hitchland 345kV	On-Line at 120MW
GEN-2002-008IS	40.50	WAPA	Edgeley 115kV [Pomona 115kV]	Commercial Operation
GEN-2002-009	80.00	SPS	Hansford 115kV	On-Line
GEN-2002-009IS	40.00	WAPA	Ft Thompson 69kV [Hyde 69kV]	Commercial Operation
GEN-2002-022	240.00	SPS	Bushland 230kV	On-Line
GEN-2002-023N	0.80	NPPD	Harmony 115kV	On-Line
GEN-2002-025A	150.00	SUNCMKEC	Spearville 230kV	On-Line
GEN-2003-004	100.00	WFEC	Washita 138kV	On-Line
GEN-2003-005	100.00	WFEC	Anadarko - Paradise (Blue Canyon) 138kV	On-Line
GEN-2003-006A	200.00	SUNCMKEC	Elm Creek 230kV	On-Line
GEN-2003-019	250.00	MIDW	Smoky Hills Tap 230kV	On-Line
GEN-2003-020	160.00	SPS	Martin 115kV	On-Line
GEN-2003-021N	75.00	NPPD	Ainsworth Wind Tap 115kV	On-Line
GEN-2003-022	120.00	AEPW	Weatherford 138kV	On-Line
GEN-2004-014	154.50	SUNCMKEC	Spearville 230kV	On-Line at 100MW
GEN-2004-020	27.00	AEPW	Weatherford 138kV	On-Line
GEN-2004-023	20.60	WFEC	Washita 138kV	On-Line
GEN-2004-023N	75.00	NPPD	Columbus Co 115kV	On-Line
GEN-2005-003	30.60	WFEC	Washita 138kV	On-Line
GEN-2005-003IS	100.00	WAPA	Nelson 115kV	Commercial Operation
GEN-2005-008	120.00	OKGE	Woodward 138kV	On-Line
GEN-2005-008IS	50.00	WAPA	Hilken 230kV [Ecklund 230kV]	Commercial Operation
GEN-2005-012	250.00	SUNCMKEC	Ironwood 345kV	On-Line at 160MW
GEN-2005-013	201.00	WERE	Caney River 345kV	On-Line
GEN-2006-001IS	10.00	XEL	Marshall 115kV	Commercial Operation
GEN-2006-002	101.00	AEPW	Sweetwater 230kV	On-Line
GEN-2006-002IS	51.00	WAPA	Wessington Springs 230kV	Commercial Operation
GEN-2006-006IS	10.00	XEL	Marshall 115kV	Commercial Operation
GEN-2006-015IS	50.00	WAPA	Hilken 230kV [Ecklund 230kV]	Commercial Operation
GEN-2006-018	170.00	SPS	TUCO Interchange 230kV	On-Line
GEN-2006-020N	42.00	NPPD	Bloomfield 115kV	On-Line
GEN-2006-020S	18.90	SPS	DWS Frisco 115kV	On-Line
GEN-2006-021	101.00	SUNCMKEC	Flat Ridge Tap 138kV	On-Line
GEN-2006-024S	19.80	WFEC	Buffalo Bear Tap 69kV	On-Line
GEN-2006-026	502.00	SPS	Hobbs 230kV & Hobbs 115kV	On-Line
GEN-2006-031	75.00	MIDW	Knoll 115kV	On-Line
GEN-2006-035	225.00	AEPW	Sweetwater 230kV	On-Line at 132MW
GEN-2006-037N1	75.00	NPPD	Broken Bow 115kV	On-Line
GEN-2006-038N005	80.00	NPPD	Broken Bow 115kV	On-Line
GEN-2006-038N019	80.00	NPPD	Petersburg North 115kV	On-Line
GEN-2006-043	99.00	AEPW	Sweetwater 230kV	On-Line
GEN-2006-044	370.00	SPS	Hitchland 345kV	On-Line at 120MW
GEN-2006-044N	40.50	NPPD	North Petersburg 115kV	On-Line
GEN-2006-046	131.00	OKGE	Dewey 138kV	On-Line
GEN-2007-011N08	81.00	NPPD	Bloomfield 115kV	On-Line
GEN-2007-013IS	50.00	WAPA	Wessington Springs 230kV	Commercial Operation

Request	Amount	Area	Requested/Proposed Point of Interconnection	Status or In-Service Date
GEN-2007-014IS	100.00	WAPA	Wessington Springs 230kV	Commercial Operation
GEN-2007-015IS	100.00	WAPA	Hilken 230kV [Ecklund 230kV]	Commercial Operation
GEN-2007-017IS	166.00	WAPA	Ft Thompson-Grand Island 345kV	On Schedule
GEN-2007-018IS	234.00	WAPA	Ft Thompson-Grand Island 345kV	On Schedule
GEN-2007-020IS	16.00	WAPA	Nelson 115kV	Commercial Operation
GEN-2007-021	201.00	OKGE	Tatonga 345kV	On-Line
GEN-2007-023IS	50.00	WAPA	Formit-Summit 115kV	On Suspension
GEN-2007-025	300.00	WERE	Viola 345kV	On-Line
GEN-2007-040	200.00	SUNCMKEC	Buckner 345kV	On-Line at 132MW
GEN-2007-043	200.00	OKGE	Minco 345kV	On-Line
GEN-2007-044	300.00	OKGE	Tatonga 345kV	On-Line at 199MW
GEN-2007-046	200.00	SPS	Hitchland 115kV	On-Line
GEN-2007-050	170.00	OKGE	Woodward EHV 138kV	On-Line at 150MW
GEN-2007-052	150.00	WFEC	Anadarko 138kV	On-Line
GEN-2007-062	425.00	OKGE	Woodward EHV 345kV	On-Line for 225MW, On Schedule and 2017
GEN-2008-003	101.00	OKGE	Woodward EHV 138kV	On-Line
GEN-2008-008IS	5.00	WAPA	Nelson 115kV	Commercial Operation
GEN-2008-013	300.00	OKGE	Hunter 345kV	On-Line at 235MW
GEN-2008-018	250.00	SPS	Finney 345kV	On-Line
GEN-2008-021	42.00	WERE	Wolf Creek 345kV	On-Line
GEN-2008-022	300.00	SPS	Crossroads 345kV	On-Line
GEN-2008-023	150.00	AEPW	Hobart Junction 138kV	On-Line
GEN-2008-037	101.00	WFEC	Slick Hills 138kV	On-Line
GEN-2008-044	197.80	OKGE	Tatonga 345kV	On-Line
GEN-2008-047	300.00	OKGE	Beaver County 345kV	On-Line
GEN-2008-051	322.00	SPS	Potter County 345kV	On-Line at 161MW
GEN-2008-079	99.20	SUNCMKEC	Crooked Creek 115kV	On-Line
GEN-2008-086N02	201.00	NPPD	Meadow Grove 230kV	On-Line
GEN-2008-092	200.60	MIDW	Post Rock 230kV	On-Line
GEN-2008-098	100.80	WERE	Waverly 345kV	On-Line
GEN-2008-119O	60.00	OPPD	S1399 161kV	On-Line
GEN-2008-123N	89.70	NPPD	Tap Pauline - Hildreth (Rosemont) 115kV	On Schedule for 2017
GEN-2008-124	200.10	SUNCMKEC	Ironwood 345kV	On-Line
GEN-2008-129	80.00	KCPL	Pleasant Hill 161kV	On-Line
GEN-2009-001IS	200.00	WAPA	Groton-Watertown 345kV	On Schedule
GEN-2009-006IS	90.00	WAPA	Mission 115kV	On Suspension
GEN-2009-007IS	100.00	WAPA	Mission 115kV	On Suspension
GEN-2009-008	199.50	MIDW	South Hays 230kV	On-Line
GEN-2009-018IS	100.00	WAPA	Groton 115kV	Commercial Operation
GEN-2009-020	48.30	MIDW	Walnut Creek 69kV	On-Line
GEN-2009-020AIS	130.50	WAPA	Tripp Junction 115kV	Commercial Operation
GEN-2009-025	59.80	OKGE	Nardins 69kV	On-Line
GEN-2009-026IS	110.00	WAPA	Dickenson-Heskett 230kV	On Schedule
GEN-2009-040	73.80	WERE	Marshall 115kV	On-Line
GEN-2010-001	300.00	OKGE	Beaver County 345kV	On-Line
GEN-2010-001IS	99.00	WAPA	Bismarck-Glenham 230kV	On Schedule
GEN-2010-003	100.80	WERE	Waverly 345kV	On-Line
GEN-2010-003IS	34.00	WAPA	Wessington Springs 230kV	Commercial Operation
GEN-2010-005	299.20	WERE	Viola 345kV	On-Line at 170MW

Request	Amount	Area	Requested/Proposed Point of Interconnection	Status or In-Service Date
GEN-2010-006	205.00	SPS	Jones 230kV	On-Line
GEN-2010-007IS	172.50	WAPA	Antelope Valley 345kV	On Suspension
GEN-2010-009	165.60	SUNCMKEC	Buckner 345kV	On-Line
GEN-2010-011	29.70	OKGE	Tatonga 345kV	On-Line
GEN-2010-014	358.80	SPS	Hitchland 345kV	On Schedule for 2018
GEN-2010-036	4.60	WERE	6th Street 115kV	On-Line
GEN-2010-040	300.00	OKGE	Cimarron 345kV	On-Line
GEN-2010-041	10.50	OPPD	S1399 161kV	On-Line
GEN-2010-045	197.80	SUNCMKEC	Buckner 345kV	On Suspension
GEN-2010-046	56.00	SPS	TUCO Interchange 230kV	On Schedule for 2016
GEN-2010-051	200.00	NPPD	Tap Hoskins - Twin Church (Dixon County) 230kV	On Schedule for 2018
GEN-2010-055	4.50	AEPW	Wekiwa 138kV	On-Line
GEN-2010-057	201.00	MIDW	Rice County 230kV	On-Line
GEN-2011-008	600.00	SUNCMKEC	Clark County 345kV	On-Line
GEN-2011-010	100.80	OKGE	Minco 345kV	On-Line
GEN-2011-011	50.00	KCPL	Iatan 345kV	On-Line
GEN-2011-014	201.00	OKGE	Tap Hitchland - Woodward Dbl Ckt (GEN-2011-014 Tap) 345kV	On-Line
GEN-2011-016	200.10	SUNCMKEC	Ironwood 345kV	On Suspension
GEN-2011-018	73.60	NPPD	Steele City 115kV	On-Line
GEN-2011-019	175.00	OKGE	Woodward 345kV	On Schedule for 2017
GEN-2011-020	175.00	OKGE	Woodward 345kV	On Schedule for 2017
GEN-2011-022	299.00	SPS	Hitchland 345kV	On Schedule for 2016 (150MW) and 2017 (149MW)
GEN-2011-025	80.00	SPS	Tap Floyd County - Crosby County 115kV	On Schedule for 2016
GEN-2011-027	120.00	NPPD	Tap Hoskins - Twin Church (Dixon County) 230kV	On Schedule for 2018
GEN-2011-037	7.00	WFEC	Blue Canyon 5 138kV	On-Line
GEN-2011-040	111.00	OKGE	Carter County 138kV	On-Line
GEN-2011-045	205.00	SPS	Jones 230kV	On-Line
GEN-2011-046	27.00	SPS	Lopez 115kV	On-Line
GEN-2011-048	175.00	SPS	Mustang 230kV	On-Line
GEN-2011-049	250.70	OKGE	Border 345kV	On Schedule for 2016
GEN-2011-050	109.80	AEPW	Santa Fe Tap 138kV	On-Line
GEN-2011-054	300.00	OKGE	Cimarron 345kV	On-Line
GEN-2011-056	3.60	NPPD	Jeffrey 115kV	On-Line
GEN-2011-056A	3.60	NPPD	John 1 115kV	On-Line
GEN-2011-056B	4.50	NPPD	John 2 115kV	On-Line
GEN-2011-057	150.40	WERE	Creswell 138kV	On-Line
GEN-2012-001	61.20	SPS	Cirrus Tap 230kV	On-Line
GEN-2012-004	41.40	OKGE	Carter County 138kV	On-Line
GEN-2012-006IS	125.01	WAPA	Williston-Ch. Creek 230kV	On Schedule
GEN-2012-007	120.00	SUNCMKEC	Rubart 115kV	On-Line
GEN-2012-009IS	99.00	WAPA	Fort Randall 115kV	On Suspension
GEN-2012-012IS	75.00	WAPA	Wolf Point-Circle 115kV	On Suspension
GEN-2012-014IS	99.50	WAPA	Groton 115kV	On Schedule
GEN-2012-020	478.00	SPS	TUCO 230kV	On Schedule for 2016
GEN-2012-021	4.80	LES	Terry Bundy Generating Station 115kV	On-Line
GEN-2012-024	180.00	SUNCMKEC	Clark County 345kV	On Schedule for 2017
GEN-2012-028	74.80	WFEC	Gotebo 69kV	On-Line
GEN-2012-032	300.00	OKGE	Open Sky 345kV	On-Line

Request	Amount	Area	Requested/Proposed Point of Interconnection	Status or In-Service Date
GEN-2012-033	98.10	OKGE	Tap and Tie South 4th - Bunch Creek & Enid Tap - Fairmont (GEN-2012-033T) 138kV	On-Line
GEN-2012-034	7.00	SPS	Mustang 230kV	On-Line
GEN-2012-035	7.00	SPS	Mustang 230kV	On-Line
GEN-2012-036	7.00	SPS	Mustang 230kV	On-Line
GEN-2012-037	203.00	SPS	TUCO 345kV	On-Line
GEN-2012-041	121.50	OKGE	Ranch Road 345kV	On-Line
GEN-2013-001IS	90.00	WAPA	Summit-Watertown 115kV	On Suspension
GEN-2013-002	50.60	LES	Tap Sheldon - Folsom & Pleasant Hill (GEN-2013-002 Tap) 115kV CKT 2	On Suspension
GEN-2013-007	100.30	OKGE	Tap Prices Falls - Carter 138kV	On-Line
GEN-2013-008	1.20	NPPD	Steele City 115kV	On-Line
GEN-2013-009IS	19.50	WAPA	Redfield NW 115kV	Commercial Operation
GEN-2013-010	99.00	SUNCMKEC	Tap Spearville - Post Rock (North of GEN-2011-017 Tap) 345kV	On Suspension
GEN-2013-011	30.00	AEPW	Turk 138kV	On-Line
GEN-2013-012	147.00	OKGE	Redbud 345kV	On-Line
GEN-2013-016	203.00	SPS	TUCO 345kV	On Schedule for 2017
GEN-2013-019	73.60	LES	Tap Sheldon - Folsom & Pleasant Hill (GEN-2013-002 Tap) 115kV CKT 2	On Suspension
GEN-2013-022	25.00	SPS	Norton 115kV	On-Line
GEN-2013-027	150.00	SPS	Tap Tolk - Yoakum 230kV	On Schedule for 2018
GEN-2013-028	559.50	GRDA	Tap N Tulsa - GRDA 1 345kV	On Schedule for 2017
GEN-2013-029	300.00	OKGE	Renfrow 345kV	On-Line for 151.6MW
GEN-2013-030	300.00	OKGE	Beaver County 345kV	On Schedule for 2016 (200MW) and 2017 (100MW)
GEN-2013-032	204.00	NPPD	Antelope 115kV	On Schedule for 2017
GEN-2013-033	28.00	MIDW	Knoll 115kV	On-Line
GEN-2014-001	200.60	WERE	Tap Wichita - Emporia Energy Center (GEN-2014-001 Tap) 345kV	On Suspension
GEN-2014-001IS	103.70	WAPA	Newell-Maurine 115kV	On Suspension
GEN-2014-002	10.50	OKGE	Tatonga 345kV (GEN-2007-021 POI)	On Schedule for 2015
GEN-2014-003	15.80	OKGE	Tatonga 345kV (GEN-2007-044 POI)	On Schedule for 2015
GEN-2014-003IS	91.00	WAPA	Culbertson 115kV	On Schedule
GEN-2014-004	4.00	NPPD	Steele City 115kV (GEN-2011-018 POI)	On-Line
GEN-2014-004IS	384.20	WAPA	Charlie Creek 345kV	IA Pending
GEN-2014-005	5.70	OKGE	Minco 345kV (GEN-2011-010 POI)	On-Line
GEN-2014-006IS	125.00	WAPA	Williston 115kV	On Schedule
GEN-2014-010IS	150.00	WAPA	Neset 115kV	On Schedule
GEN-2014-012	225.00	SPS	Tap Hobbs Interchange - Andrews 230kV	On Suspension
GEN-2014-013	73.50	NPPD	Meadow Grove (GEN-2008-086N2 Sub) 230kV	On-Line
GEN-2014-014IS	151.50	WAPA	Belfield-Rhame 230kV	On Schedule
GEN-2014-020	100.00	AEPW	Tuttle 138kV	On Schedule for 2017
GEN-2014-021	300.00	KCPL	Tap Nebraska City - Mullin Creek 345kV	On Schedule for 2017
GEN-2014-025	2.40	MIDW	Walnut Creek 69kV	On-Line
GEN-2014-028	35.00	EMDE	Riverton 161kV	On-Line
GEN-2014-031	35.80	NPPD	Meadow Grove 230kV	On-Line
GEN-2014-032	10.20	NPPD	Meadow Grove 230kV	On Schedule for 2016
GEN-2014-033	70.00	SPS	Chaves County 115kV	On-Line
GEN-2014-034	70.00	SPS	Chaves County 115kV	On-Line
GEN-2014-035	30.00	SPS	Chaves County 115kV	On Schedule for 2018

Request	Amount	Area	Requested/Proposed Point of Interconnection	Status or In-Service Date
GEN-2014-037	200.00	SPS	Tap Hitchland - Beaver County Dbl Ckt (Optima) 345kV	FACILITY STUDY STAGE
GEN-2014-039	73.40	NPPD	Friend 115kV	On Schedule for 2017
GEN-2014-040	320.40	SPS	Castro 115kV	On-Line
GEN-2014-041	120.80	SUNCMKEC	Arnold 115kV	On Suspension
GEN-2014-047	40.00	SPS	Crossroads 345kV	On Schedule for 2017
GEN-2014-056	250.00	OKGE	Minco 345kV	On Schedule for 2016
GEN-2014-057	250.00	AEPW	Tap Lawton - Sunnyside (Terry Road) 345kV	On-Line
GEN-2014-064	248.40	OKGE	Otter 138kV	On Suspension
GEN-2014-074	152.00	SPS	Tap TUCO Interchange - Oklaunion (GEN-2014-074 Tap) 345kV	FACILITY STUDY STAGE
GEN-2015-001	200.00	OKGE	Ranch Road 345kV	On-Line
GEN-2015-004	52.90	OKGE	Border 345kV	On Schedule for 2017
GEN-2015-005	200.10	KCPL	Tap Nebraska City - Sibley 345kV	On-Line
GEN-2015-007	160.00	NPPD	Hoskins 345kV	On Schedule for 2019
GEN-2015-013	120.00	WFEC	Synder 138kV	FACILITY STUDY STAGE
GEN-2015-014	150.00	SPS	Tap Cochran - Lehman 115kV	FACILITY STUDY STAGE
GEN-2015-015	154.60	OKGE	Tap Medford Tap - Coyote 138kV	On Schedule for 2017
GEN-2015-016	200.00	KCPL	Tap Marmaton - Centerville 161kV	On Schedule for 2018
GEN-2015-020	100.00	SPS	Oasis 115kV	FACILITY STUDY STAGE
GEN-2015-021	20.00	SUNCMKEC	Johnson Corner 115kV	On Schedule for 2019
GEN-2015-022	112.00	SPS	Swisher 115kV	FACILITY STUDY STAGE
GEN-2015-023	300.70	NPPD	Holt County 345kV	On Schedule for 2020
GEN-2015-024	220.00	WERE	Tap Thistle - Wichita 345kV Dbl CKT	On-Line
GEN-2015-025	220.00	WERE	Tap Thistle - Wichita 345kV Dbl CKT	On-Line
GEN-2015-027	4.90	SUNCMKEC	Crooked Creek 115kV	FACILITY STUDY STAGE
GEN-2015-029	161.00	OKGE	Tatonga 345kV	On Suspension
GEN-2015-030	200.10	OKGE	Sooner 345kV	On Suspension
GEN-2015-031	150.50	SPS	Tap Amarillo South - Swisher 230kV	FACILITY STUDY STAGE
GEN-2015-034	200.00	OKGE	Ranch Road 345kV	FACILITY STUDY STAGE
GEN-2015-036	303.60	OKGE	Johnston County 345kV	DISIS STAGE
GEN-2015-039	50.00	SPS	Tap Deaf Smith - Plant X 230kV	DISIS STAGE
GEN-2015-040	50.10	SPS	Mustang 230kV	DISIS STAGE
GEN-2015-041	5.00	SPS	TUCO Interchange 345kV	DISIS STAGE
GEN-2015-045	20.00	AEPW	Tap Lawton - Sunnyside (Terry Road) 345kV	FACILITY STUDY STAGE
GEN-2015-046	300.00	WAPA	Tande 345kV	FACILITY STUDY STAGE
GEN-2015-047	300.00	OKGE	Sooner 345kV	FACILITY STUDY STAGE
GEN-2015-048	200.00	OKGE	Cleo Corner 138kV	FACILITY STUDY STAGE
GEN-2015-052	300.00	WERE	Tap Open Sky - Rose Hill 345kV	FACILITY STUDY STAGE
GEN-2015-053	50.00	NPPD	Antelope 115kV	FACILITY STUDY STAGE
GEN-2015-055	40.00	WFEC	Erick 138kV	FACILITY STUDY STAGE
GEN-2015-056	101.20	SPS	Crossroads 345kV	FACILITY STUDY STAGE
GEN-2015-057	100.00	OKGE	Minco 345kV	FACILITY STUDY STAGE
GEN-2015-058	50.00	SPS	Atoka 115kV	FACILITY STUDY STAGE
GEN-2015-059	6.30	OKGE	Minco 345kV	DISIS STAGE
GEN-2015-060	250.50	OKGE	Woodward EHV 138kV	FACILITY STUDY STAGE
GEN-2015-061	200.00	SUNCMKEC	Mingo 345kV	FACILITY STUDY STAGE
GEN-2015-062	4.50	OKGE	Tap and Tie South 4th - Bunch Creek & Enid Tap - Fairmont (GEN-2012-033T) 138kV	FACILITY STUDY STAGE
GEN-2015-063	300.00	OKGE	Tap Woodring - Mathewson 345kV	FACILITY STUDY STAGE
GEN-2015-064	197.80	SUNCMKEC	Mingo 115kV	FACILITY STUDY STAGE

Request	Amount	Area	Requested/Proposed Point of Interconnection	Status or In-Service Date
GEN-2015-065	202.40	SUNCMKEC	Mingo 345kV	FACILITY STUDY STAGE
GEN-2015-066	248.40	OKGE	Tap Cleveland - Sooner 345kV	FACILITY STUDY STAGE
GEN-2015-067	150.00	OKGE	Sooner 138kV	FACILITY STUDY STAGE
GEN-2015-068	300.00	SPS	TUCO Interchange 345kV	FACILITY STUDY STAGE
GEN-2015-069	300.00	WERE	Union Ridge 230kV	FACILITY STUDY STAGE
GEN-2015-071	200.00	AEPW	Chisholm 345kV	FACILITY STUDY STAGE
GEN-2015-073	200.10	WERE	Emporia Energy Center 345kV	FACILITY STUDY STAGE
GEN-2015-075	51.50	SPS	Carlisle 69kV	FACILITY STUDY STAGE
GEN-2015-076	158.40	NPPD	Belden 115kV	FACILITY STUDY STAGE
GEN-2015-078	50.10	SPS	Mustang 115kV	DISIS STAGE
GEN-2015-079	129.20	SPS	Tap Yoakum - Hobbs Interchange 230kV	FACILITY STUDY STAGE
GEN-2015-080	129.20	SPS	Tap Yoakum - Hobbs Interchange 230kV	FACILITY STUDY STAGE
GEN-2015-081	180.00	OKGE	Tap Woodward - Tatonga (GEN-2011-051 Tap) 345kV	FACILITY STUDY STAGE
GEN-2015-082	200.00	OKGE	Tap Hitchland - Woodward Dbl Ckt (GEN-2011-014 Tap) 345kV	DISIS STAGE
GEN-2015-083	125.00	WERE	Belle Plain 138kV	FACILITY STUDY STAGE
GEN-2015-084	51.30	AEPW	Hollis 138kV	FACILITY STUDY STAGE
GEN-2015-085	122.40	AEPW	Altus Junction 138kV	FACILITY STUDY STAGE
GEN-2015-087	66.00	NPPD	Tap Fairbury - Hebron 115kV	FACILITY STUDY STAGE
GEN-2015-088	300.00	NPPD	Tap Moore - Pauline 345kV	FACILITY STUDY STAGE
GEN-2015-089	200.00	WAPA	Utica 230kV	DISIS STAGE
GEN-2015-090	220.00	WERE	Tap Thistle - Wichita 345kV Dbl CKT	FACILITY STUDY STAGE
GEN-2015-091	101.20	WAPA	Daglum 230kV	FACILITY STUDY STAGE
GEN-2015-092	250.00	AEPW	Tap Lawton - Sunnyside (Terry Road) 345kV	FACILITY STUDY STAGE
GEN-2015-093	250.00	OKGE	Gracemont 345kV	FACILITY STUDY STAGE
GEN-2015-095	176.00	WFEC	Tap Rose Valley - Mooreland 138kV	DISIS STAGE
GEN-2015-096	150.00	WAPA	Tap Belfied - Rhame 230kV	On-Line
GEN-2015-098	100.00	WAPA	Mingusville 230kV	FACILITY STUDY STAGE
GEN-2016-003	248.40	OKGE	Tap Badger - Woodward 345kV	DISIS STAGE
GEN-2016-004	202.00	WAPA	Leland Olds 230kV	DISIS STAGE
GEN-2016-005	150.00	SUNCMKEC	Tap Clark County - Thistle 345kV	DISIS STAGE
GEN-2016-007	100.00	WAPA	Valley City 115kV	DISIS STAGE
GEN-2016-009	29.00	OKGE	Osage 69kV	DISIS STAGE
GEN-2016-013	10.00	EMDE	La Russell 161kV	DISIS STAGE
GEN-2016-014	10.00	EMDE	La Russell 161kV	DISIS STAGE
GEN-2016-015	100.00	SPS	Andrews 230kV	DISIS STAGE
GEN-2016-016	78.20	MIDW	North Kinsley 115kV	DISIS STAGE
GEN-2016-017	250.70	WAPA	Tap Fort Thompson - Leland Olds 345kV	DISIS STAGE
GEN-2016-020	150.00	WFEC	Mooreland 138kV	DISIS STAGE
GEN-2016-021	300.00	NPPD	Hoskins 345kV	DISIS STAGE
GEN-2016-022	151.80	OKGE	Ranch Road 345kV	DISIS STAGE
GEN-2016-023	150.50	WAPA	Tap Laramie River – Sidney 345kV	DISIS STAGE
GEN-2016-028	100.00	AEPW	Clayton 138kV	DISIS STAGE
GEN-2016-029	150.50	WAPA	Tap Laramie River – Sidney 345kV	DISIS STAGE
GEN-2016-030	100.00	OKGE	Brown 138kV	DISIS STAGE
GEN-2016-031	1.50	OKGE	Ranch Road 345kV	DISIS STAGE
GEN-2016-032	200.00	OKGE	Tap Marshall - Cottonwood Creek 138kV	DISIS STAGE
GEN-2016-037	300.00	AEPW	Tap Chisholm - Gracemont 345kV	DISIS STAGE
GEN-2016-040	18.40	KCPL	Tap Nebraska City – Sibley 345kV	DISIS STAGE
GEN-2016-043	230.00	NPPD	Hoskins 345kV	DISIS STAGE

Request	Amount	Area	Requested/Proposed Point of Interconnection	Status or In-Service Date
GEN-2016-044	400.00	WAPA	Tap Groton - Leland Olds 345kV	DISIS STAGE
GEN-2016-045	500.00	OKGE	Mathewson 345kV	DISIS STAGE
GEN-2016-046	299.00	SUCMKEC	Tap Clark County - Ironwood 345kV	DISIS STAGE
GEN-2016-047	24.00	OKGE	Mustang 69kV	DISIS STAGE
GEN-2016-048	74.00	OKGE	Sooner 138kV	DISIS STAGE
GEN-2016-049	310.00	SUCMKEC	Tap Spearville - Post Rock 345kV	DISIS STAGE
GEN-2016-050	250.70	NPPD	Tap Axtell - Post Rock 345kV	DISIS STAGE
GEN-2016-051	9.80	AEPW	Tap Clinton Junction - Weatherford Southeast 138kV	DISIS STAGE
GEN-2016-052	3.30	WAPA	Hilken 230kV	DISIS STAGE
GEN-2016-053	3.30	WAPA	Hilken 230kV	DISIS STAGE
GEN-2016-054	3.40	WAPA	Wessington Springs 230kV	DISIS STAGE
GEN-2016-055	126.50	NPPD	Tap Pauline - Hildreth (Rosemont) 115kV	DISIS STAGE
GEN-2016-056	200.00	SPS	Carlisle 230kV	DISIS STAGE
GEN-2016-057	500.00	OKGE	Mathewson 345kV	DISIS STAGE
GEN-2016-060	25.00	WERE	Belle Plain 138kV	DISIS STAGE
GEN-2016-061	250.70	OKGE	Tap Woodring - Sooner 345kV	DISIS STAGE
GEN-2016-062	250.70	SPS	Andrews 230kV	DISIS STAGE
GEN-2016-063	200.00	OKGE	Tap Sunnyside – Hugo 345kV	DISIS STAGE
GEN-2016-064	116.00	NPPD	Tap Pauline - Hildreth (Rosemont) 115kV	DISIS STAGE
GEN-2016-067	73.60	SUCMKEC	Mingo 345kV	DISIS STAGE
GEN-2016-068	250.00	OKGE	Woodring 345kV	DISIS STAGE
GEN-2016-069	31.35	SPS	Chaves County 115kV	DISIS STAGE
GEN-2016-070	5.30	SPS	Martin 115kV	DISIS STAGE
GEN-2016-071	200.10	OKGE	Chilocco 138kV	DISIS STAGE
GEN-2016-073	220.00	WERE	Tap Thistle – Wichita 345kV Dbl CKT	DISIS STAGE
GEN-2016-075	50.00	WAPA	Tap Fort Thompson - Grand Island 345kV	DISIS STAGE
Gray County Wind (Montezuma)	110.00	SUNCMKEC	Gray County Tap 115kV	On-Line
H081	200.00	XEL	Tap Brookings - Lyons County 345kV	Under Study DPP-2016-FEB-West
J003	20.00	MDU	Baker 115kV	MISO Queued Request
J249	180.00	MDU	MDU Tatanka 230kV	MISO Queued Request
J262	100.00	OTP	Jamestown 345	MISO Queued Request
J263	100.00	OTP	Jamestown 345	MISO Queued Request
J290	150.00	XEL	Tap Glenboro South - Rugby 230kV	MISO Queued Request
J316	150.00	MDU	MDU 230 kV Tatanka-Ellendale line	MISO Queued Request
J432	98.00	XEL	Brookings 345kV	Under Study DPP-2016-FEB-West
J436	150.00	OTP	Big Stone South 345kV	MISO Queued Request
J437	150.00	OTP	Big Stone South 345kV	MISO Queued Request
J442	200.00	OTP	Big Stone 230 kV	MISO Queued Request
J460	200.00	XEL	Tap Brookings - Lyons County 345kV	Under Study DPP-2016-FEB-West
J488	151.80	OTP	Tap Big Stone - Ellendale 345kV	Under Study DPP-2016-FEB-West
J489	151.80	OTP	Tap Big Stone - Ellendale 345kV	Under Study DPP-2016-FEB-West
J490	60.00	MDU	McIntosh 115kV	Under Study DPP-2016-FEB-West
J493	150.00	OTP	Burr 115kV	Under Study DPP-2016-FEB-West
J510	326.90	OTP	Tap Brookings - Big Stone 345kV	Under Study DPP-2016-FEB-West

Request	Amount	Area	Requested/Proposed Point of Interconnection	Status or In-Service Date
J525	50.00	XEL	Lake Wilson 69kV	Under Study DPP-2016-FEB-West
J526	300.00	OTP	Tap Brookings - Big Stone 345kV	Under Study DPP-2016-FEB-West
Llano Estacado (White Deer)	80.00	SPS	Llano Wind 115kV	On-Line
MPC01200	98.90	OTP	Maple River 230kV	IA Pending
MPC02100	100.00	OTP	Tap Center - Mandan 230kV	On-Line
NPPD Distributed (Broken Bow)	8.30	NPPD	Broken Bow 115kV	On-Line
NPPD Distributed (Buffalo County Solar)	10.00	NPPD	Kearney Northeast	On-Line
NPPD Distributed (Burt County Wind)	12.00	NPPD	Tekamah & Oakland 115kV	On-Line
NPPD Distributed (Burwell)	3.00	NPPD	Ord 115kV	On-Line
NPPD Distributed (Columbus Hydro)	45.00	NPPD	Columbus 115kV	On-Line
NPPD Distributed (North Platte - Lexington)	54.00	NPPD	Multiple: Jeffrey 115kV, John_1 115kV, John_2 115kV	On-Line
NPPD Distributed (Ord)	11.90	NPPD	Ord 115kV	On-Line
NPPD Distributed (Stuart)	2.10	NPPD	Ainsworth 115kV	On-Line
SPS Distributed (Carson)	10.00	SPS	Martin 115kV	On-Line
SPS Distributed (Dumas 19th St)	20.00	SPS	Dumas 19th Street 115kV	On-Line
SPS Distributed (Etter)	20.00	SPS	Etter 115kV	On-Line
SPS Distributed (Hopi)	10.00	SPS	Hopi 115kV	On-Line
SPS Distributed (Jal)	10.00	SPS	S Jal 115kV	On-Line
SPS Distributed (Lea Road)	10.00	SPS	Lea Road 115kV	On-Line
SPS Distributed (Monument)	10.00	SPS	Monument 115kV	On-Line
SPS Distributed (Moore E)	25.00	SPS	Moore East 115kV	On-Line
SPS Distributed (Ocotillo)	10.00	SPS	S_Jal 115kV	On-Line
SPS Distributed (Sherman)	20.00	SPS	Sherman 115kV	On-Line
SPS Distributed (Spearman)	10.00	SPS	Spearman 69kV	On-Line
SPS Distributed (TC-Texas County)	20.00	SPS	Texas County 115kV	On-Line
SPS Distributed (Yuma)	2.57	SPS	SP-Yuma 69kV	On-Line
Total:	**50,810.8**			

11.3 C: STUDY GROUPINGS

C. Study Groups

GROUP 1: WOODWARD AREA			
Request	Capacity	Area	Proposed Point of Interconnection
GEN-2001-014	96.00	WFEC	Ft Supply 138kV
GEN-2001-037	100.00	OKGE	FPL Moreland Tap 138kV
GEN-2005-008	120.00	OKGE	Woodward 138kV
GEN-2006-024S	19.80	WFEC	Buffalo Bear Tap 69kV
GEN-2006-046	131.00	OKGE	Dewey 138kV
GEN-2007-021	201.00	OKGE	Tatonga 345kV
GEN-2007-043	200.00	OKGE	Minco 345kV
GEN-2007-044	300.00	OKGE	Tatonga 345kV
GEN-2007-050	170.00	OKGE	Woodward EHV 138kV
GEN-2007-062	425.00	OKGE	Woodward EHV 345kV
GEN-2008-003	101.00	OKGE	Woodward EHV 138kV
GEN-2008-044	197.80	OKGE	Tatonga 345kV
GEN-2010-011	29.70	OKGE	Tatonga 345kV
GEN-2010-040	300.00	OKGE	Cimarron 345kV
GEN-2011-010	100.80	OKGE	Minco 345kV
GEN-2011-019	175.00	OKGE	Woodward 345kV
GEN-2011-020	175.00	OKGE	Woodward 345kV
GEN-2011-054	300.00	OKGE	Cimarron 345kV
GEN-2014-002	10.50	OKGE	Tatonga 345kV (GEN-2007-021 POI)
GEN-2014-003	15.80	OKGE	Tatonga 345kV (GEN-2007-044 POI)
GEN-2014-005	5.70	OKGE	Minco 345kV (GEN-2011-010 POI)
GEN-2014-020	100.00	AEPW	Tuttle 138kV
GEN-2014-056	250.00	OKGE	Minco 345kV
GEN-2015-029	161.00	OKGE	Tatonga 345kV
GEN-2015-048	200.00	OKGE	Cleo Corner 138kV
GEN-2015-057	100.00	OKGE	Minco 345kV
GEN-2015-059	6.30	OKGE	Minco 345kV
GEN-2015-060	250.50	OKGE	Woodward EHV 138kV
GEN-2015-081	180.00	OKGE	Tap Woodward - Tatonga (GEN-2011-051 Tap) 345kV
GEN-2015-093	250.00	OKGE	Gracemont 345kV
GEN-2015-095	176.00	WFEC	Tap Rose Valley - Mooreland 138kV
GEN-2016-003	248.40	OKGE	Tap Badger - Woodward 345kV
GEN-2016-020	150.00	WFEC	Mooreland 138kV
GEN-2016-045	500.00	OKGE	Mathewson 345kV
GEN-2016-047	24.00	OKGE	Mustang 69kV
GEN-2016-057	500.00	OKGE	Mathewson 345kV
PRIOR QUEUED SUBTOTAL	6,270.30		
AREA TOTAL	6,270.30		

GROUP 2: HITCHLAND AREA

Request	Capacity	Area	Proposed Point of Interconnection
ASGI-2011-002	20.00	SPS	Herring 115kV
ASGI-2013-001	11.50	SPS	PanTex South 115kV
GEN-2002-008	240.00	SPS	Hitchland 345kV
GEN-2002-009	80.00	SPS	Hansford 115kV
GEN-2002-022	240.00	SPS	Bushland 230kV
GEN-2003-020	160.00	SPS	Martin 115kV
GEN-2006-020S	18.90	SPS	DWS Frisco 115kV
GEN-2006-044	370.00	SPS	Hitchland 345kV
GEN-2007-046	200.00	SPS	Hitchland 115kV
GEN-2008-047	300.00	OKGE	Beaver County 345kV
GEN-2008-051	322.00	SPS	Potter County 345kV
GEN-2010-001	300.00	OKGE	Beaver County 345kV
GEN-2010-014	358.80	SPS	Hitchland 345kV
GEN-2011-014	201.00	OKGE	Tap Hitchland - Woodward Dbl Ckt (GEN-2011-014 Tap) 345kV
GEN-2011-022	299.00	SPS	Hitchland 345kV
GEN-2013-030	300.00	OKGE	Beaver County 345kV
GEN-2014-037	200.00	SPS	Tap Hitchland - Beaver County Dbl Ckt (Optima) 345kV
GEN-2015-082	200.00	OKGE	Tap Hitchland - Woodward Dbl Ckt (GEN-2011-014 Tap) 345kV
GEN-2016-070	5.30	SPS	Martin 115kV
Llano Estacado (White Deer)	80.00	SPS	Llano Wind 115kV
SPS Distributed (Carson)	10.00	SPS	Martin 115kV
SPS Distributed (Dumas 19th St)	20.00	SPS	Dumas 19th Street 115kV
SPS Distributed (Etter)	20.00	SPS	Etter 115kV
SPS Distributed (Moore E)	25.00	SPS	Moore East 115kV
SPS Distributed (Sherman)	20.00	SPS	Sherman 115kV
SPS Distributed (Spearman)	10.00	SPS	Spearman 69kV
SPS Distributed (TC-Texas County)	20.00	SPS	Texas County 115kV
PRIOR QUEUED SUBTOTAL	**4,031.50**		
AREA TOTAL	**4,031.50**		

GROUP 3: SPEARVILLE AREA

Request	Capacity	Area	Proposed Point of Interconnection
ASGI-2012-006	22.50	SUNCMKEC	Tap Hugoton - Rolla 69kV
ASGI-2015-001	6.13	SUNCMKEC	Ninnescah 115kV
GEN-2001-039A	105.00	SUNCMKEC	Shooting Star Tap 115kV
GEN-2002-025A	150.00	SUNCMKEC	Spearville 230kV
GEN-2004-014	154.50	SUNCMKEC	Spearville 230kV
GEN-2005-012	250.00	SUNCMKEC	Ironwood 345kV
GEN-2006-021	101.00	SUNCMKEC	Flat Ridge Tap 138kV
GEN-2007-040	200.00	SUNCMKEC	Buckner 345kV
GEN-2008-018	250.00	SPS	Finney 345kV
GEN-2008-079	99.20	SUNCMKEC	Crooked Creek 115kV
GEN-2008-124	200.10	SUNCMKEC	Ironwood 345kV
GEN-2010-009	165.60	SUNCMKEC	Buckner 345kV
GEN-2010-045	197.80	SUNCMKEC	Buckner 345kV
GEN-2011-008	600.00	SUNCMKEC	Clark County 345kV
GEN-2011-016	200.10	SUNCMKEC	Ironwood 345kV
GEN-2012-007	120.00	SUNCMKEC	Rubart 115kV
GEN-2012-024	180.00	SUNCMKEC	Clark County 345kV
GEN-2013-010	99.00	SUNCMKEC	Tap Spearville - Post Rock (North of GEN-2011-017 Tap) 345kV
GEN-2015-021	20.00	SUNCMKEC	Johnson Corner 115kV
GEN-2015-027	4.90	SUNCMKEC	Crooked Creek 115kV
GEN-2016-005	150.00	SUNCMKEC	Tap Clark County - Thistle 345kV
GEN-2016-016	78.20	MIDW	North Kinsley 115kV
GEN-2016-046	299.00	SUCMKEC	Tap Clark County - Ironwood 345kV
GEN-2016-049	310.00	SUCMKEC	Tap Spearville - Post Rock 345kV
Gray County Wind (Montezuma)	110.00	SUNCMKEC	Gray County Tap 115kV
PRIOR QUEUED SUBTOTAL	**4,073.03**		
AREA TOTAL	**4,073.03**		

GROUP 4: NORTHWEST KANSAS AREA

Request	Capacity	Area	Proposed Point of Interconnection
ASGI-2013-004	36.60	SUNCMKEC	Morris 115kV
GEN-2001-039M	100.00	SUNCMKEC	Central Plains Tap 115kV
GEN-2003-006A	200.00	SUNCMKEC	Elm Creek 230kV
GEN-2003-019	250.00	MIDW	Smoky Hills Tap 230kV
GEN-2006-031	75.00	MIDW	Knoll 115kV
GEN-2008-092	200.60	MIDW	Post Rock 230kV
GEN-2009-008	199.50	MIDW	South Hays 230kV
GEN-2009-020	48.30	MIDW	Walnut Creek 69kV
GEN-2010-057	201.00	MIDW	Rice County 230kV
GEN-2013-033	28.00	MIDW	Knoll 115kV
GEN-2014-025	2.40	MIDW	Walnut Creek 69kV
GEN-2014-041	120.80	SUNCMKEC	Arnold 115kV
GEN-2015-061	200.00	SUNCMKEC	Mingo 345kV
GEN-2015-064	197.80	SUNCMKEC	Mingo 115kV
GEN-2015-065	202.40	SUNCMKEC	Mingo 345kV
GEN-2016-067	73.60	SUCMKEC	Mingo 345kV
PRIOR QUEUED SUBTOTAL	**2,136.00**		
AREA TOTAL	**2,136.00**		

GROUP 6: SOUTH TEXAS PANHANDLE/NEW MEXICO AREA

Request	Capacity	Area	Proposed Point of Interconnection
ASGI-2010-010	42.20	SPS	Lovington 115kV
ASGI-2010-020	30.00	SPS	Tap LE-Tatum - LE-Crossroads 69kV
ASGI-2010-021	15.00	SPS	Tap LE-Saunders Tap - LE-Anderson 69kV
ASGI-2011-001	27.30	SPS	Lovington 115kV
ASGI-2011-003	10.00	SPS	Hendricks 69kV
ASGI-2011-004	20.00	SPS	Pleasant Hill 69kV
ASGI-2012-002	18.15	SPS	FE-Clovis Interchange 115kV
ASGI-2013-002	18.40	SPS	FE Tucumcari 115kV
ASGI-2013-003	18.40	SPS	FE Clovis 115kV
ASGI-2013-005	1.65	SPS	FE Clovis 115kV
ASGI-2013-006	2.00	SPS	SP-Erskine 115kV
ASGI-2014-001	2.50	SPS	SP-Erskine 115kV
ASGI-2015-002	2.00	SPS	SP-Yuma 69kV
ASGI-2016-001	2.50	SPS	Wolfforth 115kV
ASGI-2016-002	0.35	SPS	Hurlwood 115kV
ASGI-2016-004	9.60	SPS	
GEN-2001-033	180.00	SPS	San Juan Tap 230kV
GEN-2001-036	80.00	SPS	Norton 115kV
GEN-2006-018	170.00	SPS	TUCO Interchange 230kV
GEN-2006-026	502.00	SPS	Hobbs 230kV & Hobbs 115kV
GEN-2008-022	300.00	SPS	Crossroads 345kV
GEN-2010-006	205.00	SPS	Jones 230kV
GEN-2010-046	56.00	SPS	TUCO Interchange 230kV
GEN-2011-025	80.00	SPS	Tap Floyd County - Crosby County 115kV
GEN-2011-045	205.00	SPS	Jones 230kV
GEN-2011-046	27.00	SPS	Lopez 115kV
GEN-2011-048	175.00	SPS	Mustang 230kV
GEN-2012-001	61.20	SPS	Cirrus Tap 230kV
GEN-2012-020	478.00	SPS	TUCO 230kV
GEN-2012-034	7.00	SPS	Mustang 230kV
GEN-2012-035	7.00	SPS	Mustang 230kV
GEN-2012-036	7.00	SPS	Mustang 230kV
GEN-2012-037	203.00	SPS	TUCO 345kV
GEN-2013-016	203.00	SPS	TUCO 345kV
GEN-2013-022	25.00	SPS	Norton 115kV
GEN-2013-027	150.00	SPS	Tap Tolk - Yoakum 230kV
GEN-2014-012	225.00	SPS	Tap Hobbs Interchange - Andrews 230kV
GEN-2014-033	70.00	SPS	Chaves County 115kV
GEN-2014-034	70.00	SPS	Chaves County 115kV
GEN-2014-035	30.00	SPS	Chaves County 115kV
GEN-2014-040	320.40	SPS	Castro 115kV
GEN-2014-047	40.00	SPS	Crossroads 345kV
GEN-2014-074	152.00	SPS	Tap TUCO Interchange - Oklaunion (GEN-2014-074 Tap) 345kV
GEN-2015-014	150.00	SPS	Tap Cochran - Lehman 115kV
GEN-2015-020	100.00	SPS	Oasis 115kV
GEN-2015-022	112.00	SPS	Swisher 115kV
GEN-2015-031	150.50	SPS	Tap Amarillo South - Swisher 230kV
GEN-2015-039	50.00	SPS	Tap Deaf Smith - Plant X 230kV
GEN-2015-040	50.10	SPS	Mustang 230kV

GEN-2015-041	5.00	SPS	TUCO Interchange 345kV
GEN-2015-056	101.20	SPS	Crossroads 345kV
GEN-2015-058	50.00	SPS	Atoka 115kV
GEN-2015-068	300.00	SPS	TUCO Interchange 345kV
GEN-2015-075	51.50	SPS	Carlisle 69kV
GEN-2015-078	50.10	SPS	Mustang 115kV
GEN-2015-079	129.20	SPS	Tap Yoakum - Hobbs Interchange 230kV
GEN-2015-080	129.20	SPS	Tap Yoakum - Hobbs Interchange 230kV
GEN-2016-015	100.00	SPS	Andrews 230kV
GEN-2016-056	200.00	SPS	Carlisle 230kV
GEN-2016-062	250.70	SPS	Andrews 230kV
GEN-2016-069	31.35	SPS	Chaves County 115kV
SPS Distributed (Hopi)	10.00	SPS	Hopi 115kV
SPS Distributed (Jal)	10.00	SPS	S Jal 115kV
SPS Distributed (Lea Road)	10.00	SPS	Lea Road 115kV
SPS Distributed (Monument)	10.00	SPS	Monument 115kV
SPS Distributed (Ocotillo)	10.00	SPS	S_Jal 115kV
SPS Distributed (Yuma)	2.57	SPS	SP-Yuma 69kV
PRIOR QUEUED SUBTOTAL	**6,312.07**		
AREA TOTAL	**6,312.07**		

GROUP 7: SOUTHWEST OKLAHOMA AREA

Request	Capacity	Area	Proposed Point of Interconnection
GEN-2001-026	74.30	WFEC	Washita 138kV
GEN-2002-005	120.00	WFEC	Red Hills Tap 138kV
GEN-2003-004	100.00	WFEC	Washita 138kV
GEN-2003-005	100.00	WFEC	Anadarko - Paradise (Blue Canyon) 138kV
GEN-2003-022	120.00	AEPW	Weatherford 138kV
GEN-2004-020	27.00	AEPW	Weatherford 138kV
GEN-2004-023	20.60	WFEC	Washita 138kV
GEN-2005-003	30.60	WFEC	Washita 138kV
GEN-2006-002	101.00	AEPW	Sweetwater 230kV
GEN-2006-035	225.00	AEPW	Sweetwater 230kV
GEN-2006-043	99.00	AEPW	Sweetwater 230kV
GEN-2007-052	150.00	WFEC	Anadarko 138kV
GEN-2008-023	150.00	AEPW	Hobart Junction 138kV
GEN-2008-037	101.00	WFEC	Slick Hills 138kV
GEN-2011-037	7.00	WFEC	Blue Canyon 5 138kV
GEN-2011-049	250.70	OKGE	Border 345kV
GEN-2012-028	74.80	WFEC	Gotebo 69kV
GEN-2015-004	52.90	OKGE	Border 345kV
GEN-2015-013	120.00	WFEC	Synder 138kV
GEN-2015-055	40.00	WFEC	Erick 138kV
GEN-2015-071	200.00	AEPW	Chisholm 345kV
GEN-2015-084	51.30	AEPW	Hollis 138kV
GEN-2015-085	122.40	AEPW	Altus Junction 138kV
GEN-2016-037	300.00	AEPW	Tap Chisholm - Gracemont 345kV
GEN-2016-051	9.80	AEPW	Tap Clinton Junction - Weatherford Southeast 138kV
PRIOR QUEUED SUBTOTAL	**2,647.40**		
AREA TOTAL	**2,647.40**		

GROUP 8: NORTH OKLAHOMA/SOUTH CENTRAL KANSAS AREA

Request	Capacity	Area	Proposed Point of Interconnection
ASGI-2010-006	150.00	AECI	Remington 138kV
ASGI-2014-014	56.40	GRDA	Ferguson 69kV
ASGI-2015-004	56.36	GRDA	Coffeyville City 69kV
GEN-2002-004	200.00	WERE	Latham 345kV
GEN-2005-013	201.00	WERE	Caney River 345kV
GEN-2007-025	300.00	WERE	Viola 345kV
GEN-2008-013	300.00	OKGE	Hunter 345kV
GEN-2008-021	42.00	WERE	Wolf Creek 345kV
GEN-2008-098	100.80	WERE	Waverly 345kV
GEN-2009-025	59.80	OKGE	Nardins 69kV
GEN-2010-003	100.80	WERE	Waverly 345kV
GEN-2010-005	299.20	WERE	Viola 345kV
GEN-2010-055	4.50	AEPW	Wekiwa 138kV
GEN-2011-057	150.40	WERE	Creswell 138kV
GEN-2012-032	300.00	OKGE	Open Sky 345kV
GEN-2012-033	98.10	OKGE	Tap and Tie South 4th - Bunch Creek & Enid Tap - Fairmont (GEN-2012-033T) 138kV
GEN-2012-041	121.50	OKGE	Ranch Road 345kV
GEN-2013-012	147.00	OKGE	Redbud 345kV
GEN-2013-028	559.50	GRDA	Tap N Tulsa - GRDA 1 345kV
GEN-2013-029	300.00	OKGE	Renfrow 345kV

GEN-2014-001	200.60	WERE	Tap Wichita - Emporia Energy Center (GEN-2014-001 Tap) 345kV
GEN-2014-028	35.00	EMDE	Riverton 161kV
GEN-2014-064	248.40	OKGE	Otter 138kV
GEN-2015-001	200.00	OKGE	Ranch Road 345kV
GEN-2015-015	154.60	OKGE	Tap Medford Tap - Coyote 138kV
GEN-2015-016	200.00	KCPL	Tap Marmaton - Centerville 161kV
GEN-2015-024	220.00	WERE	Tap Thistle - Wichita 345kV Dbl CKT
GEN-2015-025	220.00	WERE	Tap Thistle - Wichita 345kV Dbl CKT
GEN-2015-030	200.10	OKGE	Sooner 345kV
GEN-2015-034	200.00	OKGE	Ranch Road 345kV
GEN-2015-047	300.00	OKGE	Sooner 345kV
GEN-2015-052	300.00	WERE	Tap Open Sky - Rose Hill 345kV
GEN-2015-062	4.50	OKGE	Tap and Tie South 4th - Bunch Creek & Enid Tap - Fairmont (GEN-2012-033T) 138kV
GEN-2015-063	300.00	OKGE	Tap Woodring - Mathewson 345kV
GEN-2015-066	248.40	OKGE	Tap Cleveland - Sooner 345kV
GEN-2015-067	150.00	OKGE	Sooner 138kV
GEN-2015-069	300.00	WERE	Union Ridge 230kV
GEN-2015-073	200.10	WERE	Emporia Energy Center 345kV
GEN-2015-083	125.00	WERE	Belle Plain 138kV
GEN-2015-090	220.00	WERE	Tap Thistle - Wichita 345kV Dbl CKT
GEN-2016-009	29.00	OKGE	Osage 69kV
GEN-2016-022	151.80	OKGE	Ranch Road 345kV
GEN-2016-031	1.50	OKGE	Ranch Road 345kV
GEN-2016-032	200.00	OKGE	Tap Marshall - Cottonwood Creek 138kV
GEN-2016-048	74.00	OKGE	Sooner 138kV
GEN-2016-060	25.00	WERE	Belle Plain 138kV
GEN-2016-061	250.70	OKGE	Tap Woodring - Sooner 345kV
GEN-2016-068	250.00	OKGE	Woodring 345kV
GEN-2016-071	200.10	OKGE	Chilocco 138kV
GEN-2016-073	220.00	WERE	Tap Thistle – Wichita 345kV Dbl CKT
PRIOR QUEUED SUBTOTAL	**8,976.16**		
AREA TOTAL	**8,976.16**		

GROUP 9: NEBRASKA AREA

Request	Capacity	Area	Proposed Point of Interconnection
GEN-2002-023N	0.80	NPPD	Harmony 115kV
GEN-2003-021N	75.00	NPPD	Ainsworth Wind Tap 115kV
GEN-2004-023N	75.00	NPPD	Columbus Co 115kV
GEN-2006-020N	42.00	NPPD	Bloomfield 115kV
GEN-2006-037N1	75.00	NPPD	Broken Bow 115kV
GEN-2006-038N005	80.00	NPPD	Broken Bow 115kV
GEN-2006-038N019	80.00	NPPD	Petersburg North 115kV
GEN-2006-044N	40.50	NPPD	North Petersburg 115kV
GEN-2007-011N08	81.00	NPPD	Bloomfield 115kV
GEN-2007-017IS	166.00	WAPA	Ft Thompson-Grand Island 345kV
GEN-2007-018IS	234.00	WAPA	Ft Thompson-Grand Island 345kV
GEN-2008-086N02	201.00	NPPD	Meadow Grove 230kV
GEN-2008-119O	60.00	OPPD	S1399 161kV
GEN-2008-123N	89.70	NPPD	Tap Pauline - Hildreth (Rosemont) 115kV
GEN-2009-040	73.80	WERE	Marshall 115kV
GEN-2010-041	10.50	OPPD	S1399 161kV
GEN-2010-051	200.00	NPPD	Tap Hoskins - Twin Church (Dixon County) 230kV
GEN-2011-018	73.60	NPPD	Steele City 115kV

GEN-2011-027	120.00	NPPD	Tap Hoskins - Twin Church (Dixon County) 230kV
GEN-2011-056	3.60	NPPD	Jeffrey 115kV
GEN-2011-056A	3.60	NPPD	John 1 115kV
GEN-2011-056B	4.50	NPPD	John 2 115kV
GEN-2012-021	4.80	LES	Terry Bundy Generating Station 115kV
GEN-2013-002	50.60	LES	Tap Sheldon - Folsom & Pleasant Hill (GEN-2013-002 Tap) 115kV CKT 2
GEN-2013-008	1.20	NPPD	Steele City 115kV
GEN-2013-019	73.60	LES	Tap Sheldon - Folsom & Pleasant Hill (GEN-2013-002 Tap) 115kV CKT 2
GEN-2013-032	204.00	NPPD	Antelope 115kV
GEN-2014-004	4.00	NPPD	Steele City 115kV (GEN-2011-018 POI)
GEN-2014-013	73.50	NPPD	Meadow Grove (GEN-2008-086N2 Sub) 230kV
GEN-2014-031	35.80	NPPD	Meadow Grove 230kV
GEN-2014-032	10.20	NPPD	Meadow Grove 230kV
GEN-2014-039	73.40	NPPD	Friend 115kV
GEN-2015-007	160.00	NPPD	Hoskins 345kV
GEN-2015-023	300.70	NPPD	Holt County 345kV
GEN-2015-053	50.00	NPPD	Antelope 115kV
GEN-2015-076	158.40	NPPD	Belden 115kV
GEN-2015-087	66.00	NPPD	Tap Fairbury - Hebron 115kV
GEN-2015-088	300.00	NPPD	Tap Moore - Pauline 345kV
GEN-2015-089	200.00	WAPA	Utica 230kV
GEN-2016-021	300.00	NPPD	Hoskins 345kV
GEN-2016-023	150.50	WAPA	Tap Laramie River – Sidney 345kV
GEN-2016-029	150.50	WAPA	Tap Laramie River – Sidney 345kV
GEN-2016-043	230.00	NPPD	Hoskins 345kV
GEN-2016-050	250.70	NPPD	Tap Axtell - Post Rock 345kV
GEN-2016-055	126.50	NPPD	Tap Pauline - Hildreth (Rosemont) 115kV
GEN-2016-064	116.00	NPPD	Tap Pauline - Hildreth (Rosemont) 115kV
GEN-2016-075	50.00	WAPA	Tap Fort Thompson - Grand Island 345kV
NPPD Distributed (Broken Bow)	8.30	NPPD	Broken Bow 115kV
NPPD Distributed (Buffalo County Solar)	10.00	NPPD	Kearney Northeast
NPPD Distributed (Burt County Wind)	12.00	NPPD	Tekamah & Oakland 115kV
NPPD Distributed (Burwell)	3.00	NPPD	Ord 115kV
NPPD Distributed (Columbus Hydro)	45.00	NPPD	Columbus 115kV
NPPD Distributed (North Platte - Lexington)	54.00	NPPD	Multiple: Jeffrey 115kV, John_1 115kV, John_2 115kV
NPPD Distributed (Ord)	11.90	NPPD	Ord 115kV
NPPD Distributed (Stuart)	2.10	NPPD	Ainsworth 115kV
PRIOR QUEUED SUBTOTAL	**5,076.30**		
AREA TOTAL	**5,076.30**		

GROUP 10: SOUTHEAST OKLAHOMA/NORTHEAST TEXAS AREA

Request	Capacity	Area	Proposed Point of Interconnection
GEN-2017-003	21.60	AEPW	Tap Nekoosa Tap/Ashdown 69kV
CURRENT CLUSTER SUBTOTAL	21.60		
AREA TOTAL	21.60		

GROUP 12: NORTHWEST ARKANSAS AREA

Request	Capacity	Area	Proposed Point of Interconnection
GEN-2013-011	30.00	AEPW	Turk 138kV
PRIOR QUEUED SUBTOTAL	30.00		
GEN-2017-002	21.60	AEPW	Tap N Huntigton-Reeves 161kV / Tap Midland REC-N Huntington 69kV
CURRENT CLUSTER SUBTOTAL	21.60		
AREA TOTAL	51.60		

GROUP 13: NORTHWEST MISSOURI AREA

Request	Capacity	Area	Proposed Point of Interconnection
ASGI-2016-003	6.00	KCPL	
GEN-2008-129	80.00	KCPL	Pleasant Hill 161kV
GEN-2010-036	4.60	WERE	6th Street 115kV
GEN-2011-011	50.00	KCPL	Iatan 345kV
GEN-2014-021	300.00	KCPL	Tap Nebraska City - Mullin Creek 345kV
GEN-2015-005	200.10	KCPL	Tap Nebraska City - Sibley 345kV
GEN-2016-013	10.00	EMDE	La Russell 161kV
GEN-2016-014	10.00	EMDE	La Russell 161kV
GEN-2016-040	18.40	KCPL	Tap Nebraska City – Sibley 345kV
PRIOR QUEUED SUBTOTAL	679.10		
AREA TOTAL	679.10		

GROUP 14: SOUTH CENTRAL OKLAHOMA AREA

Request	Capacity	Area	Proposed Point of Interconnection
ASGI-2015-006	9.00	SWPA	Tupelo 138kV
GEN-2011-040	111.00	OKGE	Carter County 138kV
GEN-2011-050	109.80	AEPW	Santa Fe Tap 138kV
GEN-2012-004	41.40	OKGE	Carter County 138kV
GEN-2013-007	100.30	OKGE	Tap Prices Falls - Carter 138kV
GEN-2014-057	250.00	AEPW	Tap Lawton - Sunnyside (Terry Road) 345kV
GEN-2015-036	303.60	OKGE	Johnston County 345kV
GEN-2015-045	20.00	AEPW	Tap Lawton - Sunnyside (Terry Road) 345kV
GEN-2015-092	250.00	AEPW	Tap Lawton - Sunnyside (Terry Road) 345kV
GEN-2016-028	100.00	AEPW	Clayton 138kV
GEN-2016-030	100.00	OKGE	Brown 138kV
GEN-2016-063	200.00	OKGE	Tap Sunnyside – Hugo 345kV
PRIOR QUEUED SUBTOTAL	1,595.10		
AREA TOTAL	1,595.10		

GROUP 15: E-SOUTH DAKOTA AREA

Request	Capacity	Area	Proposed Point of Interconnection
ASGI-2016-005	20.00	WAPA	Tap White Lake - Stickeny 69kV
ASGI-2016-006	20.00	WAPA	Mitchell
ASGI-2016-007	20.00	WAPA	Kimball 69kV
G176	100.00	XEL	Yankee 115kV
G255	100.00	XEL	Yankee 115kV
G586	30.00	XEL	Yankee 115kV
G736	200.00	OTP	Big Stone South 230kV
GEN-2002-009IS	40.00	WAPA	Ft Thompson 69kV [Hyde 69kV]
GEN-2007-013IS	50.00	WAPA	Wessington Springs 230kV
GEN-2007-014IS	100.00	WAPA	Wessington Springs 230kV
GEN-2007-023IS	50.00	WAPA	Formit-Summit 115kV
GEN-2009-001IS	200.00	WAPA	Groton-Watertown 345kV
GEN-2009-018IS	100.00	WAPA	Groton 115kV
GEN-2010-001IS	99.00	WAPA	Bismarck-Glenham 230kV
GEN-2010-003IS	34.00	WAPA	Wessington Springs 230kV
GEN-2012-014IS	99.50	WAPA	Groton 115kV
GEN-2013-001IS	90.00	WAPA	Summit-Watertown 115kV
GEN-2013-009IS	19.50	WAPA	Redfield NW 115kV
GEN-2014-001IS	103.70	WAPA	Newell-Maurine 115kV
GEN-2016-017	250.70	WAPA	Tap Fort Thompson - Leland Olds 345kV
H081	200.00	XEL	Tap Brookings - Lyons County 345kV
J432	98.00	XEL	Brookings 345kV
J436	150.00	OTP	Big Stone South 345kV
J437	150.00	OTP	Big Stone South 345kV
J442	200.00	OTP	Big Stone 230 kV
J460	200.00	XEL	Tap Brookings - Lyons County 345kV
J488	151.80	OTP	Tap Big Stone - Ellendale 345kV
J489	151.80	OTP	Tap Big Stone - Ellendale 345kV
J493	150.00	OTP	Burr 115kV
J510	326.90	OTP	Tap Brookings - Big Stone 345kV
J525	50.00	XEL	Lake Wilson 69kV
J526	300.00	OTP	Tap Brookings - Big Stone 345kV
PRIOR QUEUED SUBTOTAL	**3,854.90**		
AREA TOTAL	**3,854.90**		

GROUP 16: W-NORTH DAKOTA AREA

Request	Capacity	Area	Proposed Point of Interconnection

G380	150.00	OTP	Rugby 115kV
G408	12.00	XEL	Tap McHenry - Souris 115kV
G502	50.60	MP	Milton Young 230kV
G645	50.00	GRE	Ladish 115kV
G723	10.00	MDU	Haskett 115kV
G752	150.00	MDU	Tap Bison - Hettinger 230kV
G788	49.00	GRE	Ladish 115kV
G830	99.00	GRE	GRE McHenry 115kV
GEN-2005-008IS	50.00	WAPA	Hilken 230kV [Ecklund 230kV]
GEN-2006-015IS	50.00	WAPA	Hilken 230kV [Ecklund 230kV]
GEN-2007-015IS	100.00	WAPA	Hilken 230kV [Ecklund 230kV]
GEN-2009-026IS	110.00	WAPA	Dickenson-Heskett 230kV
GEN-2010-007IS	172.50	WAPA	Antelope Valley 345kV
GEN-2012-006IS	125.01	WAPA	Williston-Ch. Creek 230kV
GEN-2012-012IS	75.00	WAPA	Wolf Point-Circle 115kV
GEN-2014-003IS	91.00	WAPA	Culbertson 115kV
GEN-2014-004IS	384.20	WAPA	Charlie Creek 345kV
GEN-2014-006IS	125.00	WAPA	Williston 115kV
GEN-2014-010IS	150.00	WAPA	Neset 115kV
GEN-2014-014IS	151.50	WAPA	Belfield-Rhame 230kV
GEN-2015-046	300.00	WAPA	Tande 345kV
GEN-2015-091	101.20	WAPA	Daglum 230kV
GEN-2015-096	150.00	WAPA	Tap Belfied - Rhame 230kV
GEN-2015-098	100.00	WAPA	Mingusville 230kV
GEN-2016-004	202.00	WAPA	Leland Olds 230kV
GEN-2016-044	400.00	WAPA	Tap Groton - Leland Olds 345kV
GEN-2016-052	3.30	WAPA	Hilken 230kV
GEN-2016-053	3.30	WAPA	Hilken 230kV
J003	20.00	MDU	Baker 115kV
J249	180.00	MDU	MDU Tatanka 230kV
J262	100.00	OTP	Jamestown 345
J263	100.00	OTP	Jamestown 345
J290	150.00	XEL	Tap Glenboro South - Rugby 230kV
J316	150.00	MDU	MDU 230 kV Tatanka-Ellendale line
MPC01200	98.90	OTP	Maple River 230kV
MPC02100	100.00	OTP	Tap Center - Mandan 230kV
PRIOR QUEUED SUBTOTAL	**4,313.51**		
AREA TOTAL	**0.00**		

GROUP 17: W-SOUTH DAKOTA AREA

Request	Capacity	Area	Proposed Point of Interconnection
GEN-2006-002IS	51.00	WAPA	Wessington Springs 230kV
GEN-2009-006IS	90.00	WAPA	Mission 115kV
GEN-2009-007IS	100.00	WAPA	Mission 115kV
GEN-2009-020AIS	130.50	WAPA	Tripp Junction 115kV
GEN-2012-009IS	99.00	WAPA	Fort Randall 115kV
GEN-2016-054	3.40	WAPA	Wessington Springs 230kV
J490	60.00	MDU	McIntosh 115kV
PRIOR QUEUED SUBTOTAL	**533.90**		
AREA TOTAL	**0.00**		

GROUP 18: E-NORTH DAKOTA AREA

Request	Capacity	Area	Proposed Point of Interconnection
GEN-2002-008IS	40.50	WAPA	Edgeley 115kV [Pomona 115kV]
GEN-2005-003IS	100.00	WAPA	Nelson 115kV
GEN-2006-001IS	10.00	XEL	Marshall 115kV
GEN-2006-006IS	10.00	XEL	Marshall 115kV
GEN-2007-020IS	16.00	WAPA	Nelson 115kV
GEN-2008-008IS	5.00	WAPA	Nelson 115kV
GEN-2016-007	100.00	WAPA	Valley City 115kV
PRIOR QUEUED SUBTOTAL	**281.50**		
AREA TOTAL	**0.00**		

CLUSTER TOTAL (CURRENT STUDY)	**43.2**	**MW**
PQ TOTAL (PRIOR QUEUED)	**50,810.8**	**MW**
CLUSTER TOTAL (INCLUDING PRIOR QUEUED)	**50,854.0**	**MW**

11.4 D: PROPOSED POINT OF INTERCONNECTION ONE-LINE DIAGRAMS

Interconnection Request: GEN-2017-002
(Primary POI: Tap North Huntington - Reeves Rd. 161 kV)
Cluster Interconnection Costs: $4,000,000

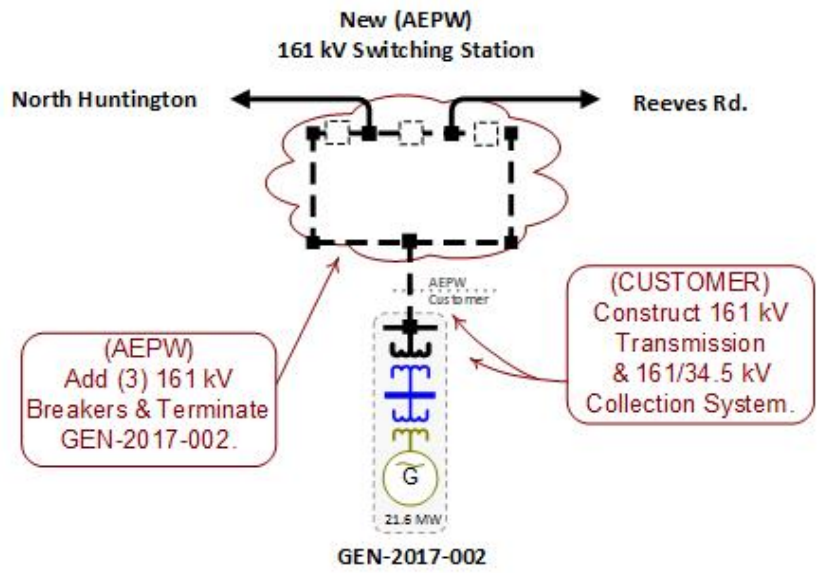

Interconnection Request: GEN-2017-002
(Secondary POI: Tap Midland REC-North Huntington 69 kV)
Cluster Interconnection Costs: $2,000,000

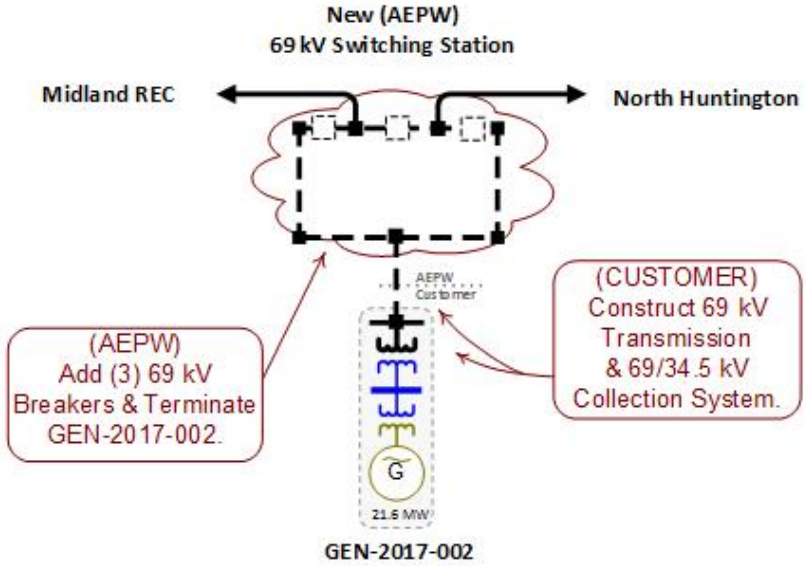

Interconnection Request: GEN-2017-003
(Primary POI: Tap Nekoosa Tap-Ashdown 69 kV)
Cluster Interconnection Costs: $2,000,000

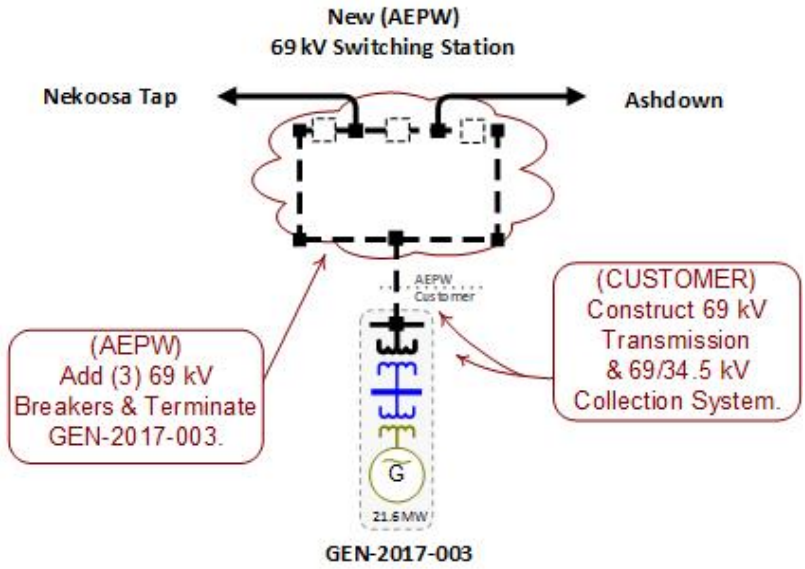

11.5 E: COST ALLOCATION PER INTERCONNECTION REQUEST (INCLUDING PRIOR QUEUED UPGRADES)

Important Note:

****WITHDRAWAL OF HIGHER QUEUED PROJECTS WILL CAUSE A RESTUDY AND MAY RESULT IN HIGHER INTERCONNECTION COSTS****

This section shows each Generator Interconnection Request Customer, their current study impacted Network Upgrades, and the previously allocated upgrades upon which they rely to accommodate their interconnection to the transmission system.

The costs associated with the current study Network Upgrades are allocated to the Customers shown in this report.

In addition should a higher queued request, defined as one this study includes as a prior queued request, withdraw, the Network Upgrades assigned to the withdrawn request may be reallocated to the remaining requests that have an impact on the Network Upgrade under a restudy. Also, should an Interconnection Request choose to go into service prior to the operation date of any necessary Network Upgrades, the costs associated with those upgrades may be reallocated to the impacted Interconnection Request. The actual costs allocated to each Generator Interconnection Request Customer will be determined at the time of a restudy.

The required interconnection costs listed do not include all costs associated with the deliverability of the energy to final customers. These costs are determined by separate studies if the Customer submits a Transmission Service Request through SPP's Open Access Same Time Information System (OASIS) as required by Attachment Z1 of the SPP OATT. In addition, costs associated with a short circuit analysis will be allocated should the Interconnection Request Customer choose to execute a Interconnection Facilities Study Agreement.

Appendix E. Cost Allocation Per Request (Scenario 1)

(Including Previously Allocated Network Upgrades*)

Interconnection Request and Upgrades	Upgrade Type	Allocated Cost	Upgrade Cost
GEN-2017-002			
GEN-2017-002 Interconnection Costs See One-Line Diagram.	Current Study	$4,000,000	$4,000,000
	Current Study Total	$4,000,000	
GEN-2017-003			
GEN-2017-003 Interconnection Costs See One-Line Diagram.	Current Study	$2,000,000	$2,000,000
	Current Study Total	$2,000,000	
	TOTAL CURRENT STUDY COSTS:	**$6,000,000**	

* Withdrawal of higher queued projects will cause a restudy and may result in higher costs

Appendix E. Cost Allocation Per Request (Scenario 2)

(Including Previously Allocated Network Upgrades*)

Interconnection Request and Upgrades	Upgrade Type	Allocated Cost	Upgrade Cost
GEN-2017-002			
GEN-2017-002 Interconnection Costs See One-Line Diagram.	Current Study	$4,000,000	$4,000,000
	Current Study Total	$4,000,000	
GEN-2017-003			
GEN-2017-003 Interconnection Costs See One-Line Diagram.	Current Study	$2,000,000	$2,000,000
	Current Study Total	$2,000,000	
	TOTAL CURRENT STUDY COSTS:	**$6,000,000**	

* Withdrawal of higher queued projects will cause a restudy and may result in higher costs

Appendix E. Cost Allocation Per Request (Scenario 3)

(Including Previously Allocated Network Upgrades*)

Interconnection Request and Upgrades	Upgrade Type	Allocated Cost	Upgrade Cost
GEN-2017-002			
GEN-2017-002 Interconnection Costs See One-Line Diagram.	Current Study	$2,000,000	$2,000,000
	Current Study Total	$2,000,000	
GEN-2017-003			
GEN-2017-003 Interconnection Costs See One-Line Diagram.	Current Study	$2,000,000	$2,000,000
	Current Study Total	$2,000,000	
	TOTAL CURRENT STUDY COSTS:	**$4,000,000**	

* Withdrawal of higher queued projects will cause a restudy and may result in higher costs

11.6 F: COST ALLOCATION PER PROPOSED STUDY NETWORK UPGRADE

Important Note:

****WITHDRAWAL OF HIGHER QUEUED PROJECTS WILL CAUSE A RESTUDY AND MAY RESULT IN HIGHER INTERCONNECTION COSTS****

This section shows each Direct Assigned Facility and Network Upgrade and the Generator Interconnection Request Customer(s) which have an impact in this study assuming all higher queued projects remain in the queue and achieve commercial operation.

The required interconnection costs listed do not include all costs associated with the deliverability of the energy to final customers. These costs are determined by separate studies if the Customer submits a Transmission Service Request through SPP's Open Access Same Time Information System (OASIS) as required by Attachment Z1 of the SPP OATT. In addition, costs associated with a short circuit analysis will be allocated should the Interconnection Request Customer choose to execute a Facility Study Agreement.

There may be additional costs allocated to each Customer. See Appendix E for more details.

Appendix F. Cost Allocation by Upgrade (Scenario 1)

GEN-2017-002 Interconnection Costs			**$4,000,000**
See One-Line Diagram.			
	GEN-2017-002	$4,000,000	
	Total Allocated Costs	**$4,000,000**	
GEN-2017-003 Interconnection Costs			**$2,000,000**
See One-Line Diagram.			
	GEN-2017-003	$2,000,000	
	Total Allocated Costs	**$2,000,000**	

* Withdrawal of higher queued projects will cause a restudy and may result in higher costs

Appendix F. Cost Allocation by Upgrade (Scenario 2)

GEN-2017-002 Interconnection Costs			**$4,000,000**
See One-Line Diagram.			
	GEN-2017-002	$4,000,000	
	Total Allocated Costs	**$4,000,000**	
GEN-2017-003 Interconnection Costs			**$2,000,000**
See One-Line Diagram.			
	GEN-2017-003	$2,000,000	
	Total Allocated Costs	**$2,000,000**	

* Withdrawal of higher queued projects will cause a restudy and may result in higher costs

Appendix F. Cost Allocation by Upgrade (Scenario 3)

GEN-2017-002 Interconnection Costs			**$2,000,000**
See One-Line Diagram.			
	GEN-2017-002	$2,000,000	
	Total Allocated Costs	**$2,000,000**	
GEN-2017-003 Interconnection Costs			**$2,000,000**
See One-Line Diagram.			
	GEN-2017-003	$2,000,000	
	Total Allocated Costs	**$2,000,000**	

* Withdrawal of higher queued projects will cause a restudy and may result in higher costs

11.7 G: POWER FLOW ANALYSIS (CONSTRAINTS REQUIRING TRANSMISSION REINFORCEMENT)

Scenario Number	Scenario Description	Group Name
Scenario #1	Group 10 HVER	None at this time
	Group 10 NRIS	None at this time
Scenario #2	Group 12 HVER	None at this time
	Group 12 NRIS	None at this time
Scenario #3	Group 12 HVER	None at this time
	Group 12 NRIS	None at this time

SEASON	GROUP	SCENARIO	DIRECTION	SOURCE	MONITORED ELEMENT	RATE (MVA)	TDF	CONTINGENCY LOADING %	CONTINGENCY
					Currently none at this time				

11.8 H: POWER FLOW ANALYSIS (OTHER CONSTRAINTS NOT REQUIRING TRANSMISSION REINFORCEMENT)

Available upon request

11.9 H-AS: POWER FLOW ANALYSIS (OTHER CONSTRAINTS POTENTIALLY REQUIRING AFFECTED SYSTEM MITIGATION)

Available upon request

11.10 I: SHORT CIRCUIT ANALYSIS

PSS(R)E-32.2.2 ASCC SHORT CIRCUIT CURRENTS MON, MAR 27 2017 10:26
2015 MDWG FINAL WITH 2013 MMWG, UPDATED WITH 2014 SERC & MRO
MDWG 17S WITH MMWG 15S, MRO 16W TOPO/16S PROF, SERC 16S

OPTIONS USED:
- FLAT CONDITIONS
  - BUS VOLTAGES SET TO 1 PU AT 0 PHASE ANGLE
  - GENERATOR P=0, Q=0
  - TRANSFOMRER TAP RATIOS=1.0 PU and PHASE ANGLES=0.0
  - LINE CHARGING=0.0 IN +/-/0 SEQUENCE
  - LOAD=0.0 IN +/- SEQUENCE, CONSIDERED IN ZERO SEQUENCE
  - LINE/FIXED/SWITCHED SHUNTS=0.0 AND MAGNETIZING ADMITTANCE=0.0 IN +/-/0 SEQUENCE
  - DC LINES AND FACTS DEVICES BLOCKED
  - TRANSFORMER ZERO SEQUENCE IMPEDANCE CORRECTIONS IGNORED

THREE PHASE FAULT

```
X---------- BUS ----------X          /I+/    AN(I+)
917002 [G17002_T(P) 161.00] AMP     8970.5   -77.70
507185 [REVESRD5    161.00] AMP    11356.8   -79.75
507189 [NHUNTNT5    161.00] AMP     8853.9   -77.60
916000 [GEN-2017P002161.00] AMP     8337.0   -77.90
504181 [HACKETT   5 161.00] AMP    12410.8   -80.60
507188 [NHUNTNT2    69.000] AMP    10022.2   -82.93
507192 [WBOONVL5    161.00] AMP     6577.0   -75.39
507182 [BONANZA5    161.00] AMP    15390.6   -83.09
507186 [HUNTING2    69.000] AMP     9446.6   -81.29
507190 [NMAGZIN5    161.00] AMP     7763.9   -77.53
507194 [HUNTREC2    69.000] AMP     6342.5   -79.59
507196 [MIDLREC2    69.000] AMP     7348.5   -82.47
507198 [WBOONVL2    69.000] AMP     5964.9   -77.79
504172 [BOONEVIL  2 69.000] AMP     5820.5   -76.39
507187 [MIDLND-2    69.000] AMP     6784.0   -82.30
507191 [WALDRON2    69.000] AMP     2279.3   -74.60
507195 [MAGZREC5    161.00] AMP     6864.4   -79.04
515261 [BONANZT5    161.00] AMP    15522.2   -83.12
515316 [BRANCH 5    161.00] AMP     8102.1   -77.74
337902 [5DANVLE AR! 161.00] AMP     7140.1   -79.66
504186 [SUGRLF 2    69.000] AMP     4265.1   -66.69
507183 [BOONVIL2    69.000] AMP     5436.0   -72.54
515259 [HOWEIN 2    69.000] AMP     7243.8   -75.62
515262 [AES    5    161.00] AMP    11757.1   -84.73
515299 [BEVYTAP5    161.00] AMP    20149.0   -84.18
515313 [BRANCH 2    69.000] AMP     7673.0   -79.57
515314 [GRANDPR5    161.00] AMP     7500.1   -76.69
515358 [SHORTMT5    161.00] AMP     6511.6   -79.26
```

PSS(R)E-32.2.2 ASCC SHORT CIRCUIT CURRENTS MON, MAR 27 2017 10:26
2015 MDWG FINAL WITH 2013 MMWG, UPDATED WITH 2014 SERC & MRO
MDWG 2025S WITH MMWG 2024S, MRO & SERC 2025 SUMMER

```
OPTIONS USED:
   - FLAT CONDITIONS
       - BUS VOLTAGES SET TO 1 PU AT 0 PHASE ANGLE
       - GENERATOR P=0, Q=0
       - TRANSFOMRER TAP RATIOS=1.0 PU and PHASE ANGLES=0.0
       - LINE CHARGING=0.0 IN +/-/0 SEQUENCE
       - LOAD=0.0 IN +/- SEQUENCE, CONSIDERED IN ZERO SEQUENCE
       - LINE/FIXED/SWITCHED SHUNTS=0.0 AND MAGNETIZING ADMITTANCE=0.0 IN +/-/0 SEQUENCE
       - DC LINES AND FACTS DEVICES BLOCKED
       - TRANSFORMER ZERO SEQUENCE IMPEDANCE CORRECTIONS IGNORED

                              THREE PHASE FAULT
X---------- BUS ----------X          /I+/    AN(I+)
917002 [G17002_T(P) 161.00] AMP     8352.8   -77.66
507185 [REVESRD5    161.00] AMP    10299.8   -79.48
507189 [NHUNTNT5    161.00] AMP     8255.7   -77.58
916000 [GEN-2017P002161.00] AMP     7800.8   -77.85
504181 [HACKETT   5 161.00] AMP    11133.4   -80.20
507188 [NHUNTNT2    69.000] AMP     9642.1   -82.75
507192 [WBOONVL5    161.00] AMP     6385.0   -75.55
507182 [BONANZA5    161.00] AMP    13404.8   -82.26
507186 [HUNTING2    69.000] AMP     9107.6   -81.18
507190 [NMAGZIN5    161.00] AMP     7597.6   -77.69
507194 [HUNTREC2    69.000] AMP     6187.7   -79.56
507196 [MIDLREC2    69.000] AMP     7120.2   -82.34
507198 [WBOONVL2    69.000] AMP     5905.2   -77.80
504172 [BOONEVIL  2 69.000] AMP     5764.5   -76.41
507187 [MIDLND-2    69.000] AMP     6581.5   -82.18
507191 [WALDRON2    69.000] AMP     2259.0   -74.63
507195 [MAGZREC5    161.00] AMP     6758.6   -79.12
515261 [BONANZT5    161.00] AMP    13502.0   -82.28
515316 [BRANCH 5    161.00] AMP     7932.7   -77.91
337902 [5DANVLE AR! 161.00] AMP     7082.7   -79.69
504186 [SUGRLF 2    69.000] AMP     4185.6   -66.91
507183 [BOONVIL2    69.000] AMP     5389.8   -72.60
515259 [HOWEIN 2    69.000] AMP     6879.9   -75.82
515262 [AES    5    161.00] AMP     7474.1   -82.21
515299 [BEVYTAP5    161.00] AMP    18283.1   -83.80
515313 [BRANCH 2    69.000] AMP     7605.9   -79.63
515314 [GRANDPR5    161.00] AMP     7350.6   -76.85
515358 [SHORTMT5    161.00] AMP     6416.2   -79.36


                        PSS(R)E-32.2.2 ASCC SHORT CIRCUIT CURRENTS          MON, MAR 27 2017  10:27
2015 MDWG FINAL WITH 2013 MMWG, UPDATED WITH 2014 SERC & MRO
MDWG 17S WITH MMWG 15S, MRO 16W TOPO/16S PROF, SERC 16S

OPTIONS USED:
   - FLAT CONDITIONS
       - BUS VOLTAGES SET TO 1 PU AT 0 PHASE ANGLE
```

- GENERATOR P=0, Q=0
- TRANSFOMRER TAP RATIOS=1.0 PU and PHASE ANGLES=0.0
- LINE CHARGING=0.0 IN +/-/0 SEQUENCE
- LOAD=0.0 IN +/- SEQUENCE, CONSIDERED IN ZERO SEQUENCE
- LINE/FIXED/SWITCHED SHUNTS=0.0 AND MAGNETIZING ADMITTANCE=0.0 IN +/-/0 SEQUENCE
- DC LINES AND FACTS DEVICES BLOCKED
- TRANSFORMER ZERO SEQUENCE IMPEDANCE CORRECTIONS IGNORED

THREE PHASE FAULT

```
X---------- BUS ----------X          /I+/    AN(I+)
917202 [G17002_T(S) 69.000] AMP     9309.8   -82.84
507188 [NHUNTNT2    69.000] AMP    10022.2   -82.93
507196 [MIDLREC2    69.000] AMP     7348.5   -82.47
916010 [GEN-2017S00269.000] AMP     9005.3   -82.76
507186 [HUNTING2    69.000] AMP     9446.6   -81.29
507187 [MIDLND-2    69.000] AMP     6784.0   -82.30
507189 [NHUNTNT5    161.00] AMP     8853.9   -77.60
507194 [HUNTREC2    69.000] AMP     6342.5   -79.59
504186 [SUGRLF 2    69.000] AMP     4265.1   -66.69
507185 [REVESRD5    161.00] AMP    11356.8   -79.75
507191 [WALDRON2    69.000] AMP     2279.3   -74.60
507192 [WBOONVL5    161.00] AMP     6577.0   -75.39
515259 [HOWEIN 2    69.000] AMP     7243.8   -75.62
504181 [HACKETT   5 161.00] AMP    12410.8   -80.60
507190 [NMAGZIN5    161.00] AMP     7763.9   -77.53
507198 [WBOONVL2    69.000] AMP     5964.9   -77.79
510878 [WISTER-2    69.000] AMP     5263.8   -78.67
515260 [HOWESW 2    69.000] AMP     5557.1   -72.27
515275 [POTEAU 2    69.000] AMP     7564.5   -73.36
504172 [BOONEVIL  2 69.000] AMP     5820.5   -76.39
507182 [BONANZA5    161.00] AMP    15390.6   -83.09
507195 [MAGZREC5    161.00] AMP     6864.4   -79.04
510900 [REDOAK-2    69.000] AMP     5203.7   -78.27
515274 [CAVANAL2    69.000] AMP     9216.6   -78.43
515279 [HODGNST2    69.000] AMP     5381.2   -72.66
515316 [BRANCH 5    161.00] AMP     8102.1   -77.74
```

PSS(R)E-32.2.2 ASCC SHORT CIRCUIT CURRENTS MON, MAR 27 2017 10:27
2015 MDWG FINAL WITH 2013 MMWG, UPDATED WITH 2014 SERC & MRO
MDWG 2025S WITH MMWG 2024S, MRO & SERC 2025 SUMMER

OPTIONS USED:
- FLAT CONDITIONS
  - BUS VOLTAGES SET TO 1 PU AT 0 PHASE ANGLE
  - GENERATOR P=0, Q=0
  - TRANSFOMRER TAP RATIOS=1.0 PU and PHASE ANGLES=0.0
  - LINE CHARGING=0.0 IN +/-/0 SEQUENCE
  - LOAD=0.0 IN +/- SEQUENCE, CONSIDERED IN ZERO SEQUENCE
  - LINE/FIXED/SWITCHED SHUNTS=0.0 AND MAGNETIZING ADMITTANCE=0.0 IN +/-/0 SEQUENCE
  - DC LINES AND FACTS DEVICES BLOCKED

- TRANSFORMER ZERO SEQUENCE IMPEDANCE CORRECTIONS IGNORED

THREE PHASE FAULT

```
X---------- BUS ----------X          /I+/    AN(I+)
917202 [G17002_T(S) 69.000] AMP     8974.6   -82.67
507188 [NHUNTNT2    69.000] AMP     9642.1   -82.75
507196 [MIDLREC2    69.000] AMP     7120.2   -82.34
916010 [GEN-2017S00269.000] AMP     8691.3   -82.60
507186 [HUNTING2    69.000] AMP     9107.6   -81.18
507187 [MIDLND-2    69.000] AMP     6581.5   -82.18
507189 [NHUNTNT5    161.00] AMP     8255.7   -77.58
507194 [HUNTREC2    69.000] AMP     6187.7   -79.56
504186 [SUGRLF 2    69.000] AMP     4185.6   -66.91
507185 [REVESRD5    161.00] AMP    10299.8   -79.48
507191 [WALDRON2    69.000] AMP     2259.0   -74.63
507192 [WBOONVL5    161.00] AMP     6385.0   -75.55
515259 [HOWEIN 2    69.000] AMP     6879.9   -75.82
504181 [HACKETT   5 161.00] AMP    11133.4   -80.20
507190 [NMAGZIN5    161.00] AMP     7597.6   -77.69
507198 [WBOONVL2    69.000] AMP     5905.2   -77.80
510878 [WISTER-2    69.000] AMP     5105.1   -78.68
515260 [HOWESW 2    69.000] AMP     5325.0   -72.47
515275 [POTEAU 2    69.000] AMP     7077.6   -73.45
504172 [BOONEVIL  2 69.000] AMP     5764.5   -76.41
507182 [BONANZA5    161.00] AMP    13404.8   -82.26
507195 [MAGZREC5    161.00] AMP     6758.6   -79.12
510900 [REDOAK-2    69.000] AMP     5147.5   -78.23
515274 [CAVANAL2    69.000] AMP     8425.1   -77.92
515279 [HODGNST2    69.000] AMP     5159.8   -72.84
515316 [BRANCH 5    161.00] AMP     7932.7   -77.91
```

PSS(R)E-32.2.2 ASCC SHORT CIRCUIT CURRENTS MON, MAR 27 2017 10:27
2015 MDWG FINAL WITH 2013 MMWG, UPDATED WITH 2014 SERC & MRO
MDWG 17S WITH MMWG 15S, MRO 16W TOPO/16S PROF, SERC 16S

OPTIONS USED:
- FLAT CONDITIONS
  - BUS VOLTAGES SET TO 1 PU AT 0 PHASE ANGLE
  - GENERATOR P=0, Q=0
  - TRANSFOMRER TAP RATIOS=1.0 PU and PHASE ANGLES=0.0
  - LINE CHARGING=0.0 IN +/-/0 SEQUENCE
  - LOAD=0.0 IN +/- SEQUENCE, CONSIDERED IN ZERO SEQUENCE
  - LINE/FIXED/SWITCHED SHUNTS=0.0 AND MAGNETIZING ADMITTANCE=0.0 IN +/-/0 SEQUENCE
  - DC LINES AND FACTS DEVICES BLOCKED
  - TRANSFORMER ZERO SEQUENCE IMPEDANCE CORRECTIONS IGNORED

THREE PHASE FAULT

```
X---------- BUS ----------X          /I+/    AN(I+)
917003 [G17003_T    69.000] AMP    11486.0   -80.64
508051 [ASHDOWN2    69.000] AMP    12788.6   -81.84
```

```
508066 [NEKOSAT2    69.000] AMP    11327.8   -80.49
916020 [GEN-2017-00369.000] AMP    11025.7   -80.63
507429 [PATTERS2    69.000] AMP    14156.4   -83.06
508081 [SUGHLET2    69.000] AMP    16666.6   -82.64
508094 [HOLOX  2    69.000] AMP     9957.0   -80.87
507421 [FOREMAN2    69.000] AMP     3654.6   -61.34
507431 [PATTERS4    138.00] AMP    13099.9   -82.34
508065 [NEKOOSA2    69.000] AMP     6252.4   -83.09
508079 [SUGARHL2    69.000] AMP    17428.9   -82.98
508084 [TEX12ST2    69.000] AMP    12838.9   -80.38
504029 [SFOREMAN  4 138.00] AMP     8313.2   -79.46
504123 [LOCKSBRG  4 138.00] AMP     5825.5   -79.34
504124 [ASHDWN_W  4 138.00] AMP     9860.0   -82.68
507402 [ASHDWNR4    138.00] AMP    10386.5   -83.24
507407 [FORMANR2    69.000] AMP     3533.0   -61.26
507434 [SNASHVL4    138.00] AMP     3699.1   -74.31
507440 [FOREMAG2    69.000] AMP     3143.3   -58.84
508071 [NWTXARK4    138.00] AMP    24874.6   -85.34
508080 [SUGARHL4    138.00] AMP    12162.5   -84.48
508082 [SUGHLWT2    69.000] AMP    16562.5   -82.55
508088 [WASHST 2    69.000] AMP    12996.2   -80.57
337672 [4MURFBORO   138.00] AMP     2883.3   -74.64
504030 [SFORE_1   2 69.000] AMP     2811.4   -88.23
504109 [NW_TEXAR  2 69.000] AMP    14417.7   -81.31
504120 [DEQUEEN   2 69.000] AMP     4751.1   -68.34
507428 [OKAY   4    138.00] AMP    10273.9   -84.08
507433 [SDIERKS4    138.00] AMP     3569.3   -76.98
507454 [TURK   4    138.00] AMP    24752.4   -86.51
508049 [NASH   4    138.00] AMP    19376.6   -84.59
508069 [NNBOSTN4    138.00] AMP    10558.9   -78.57
508070 [NWT-BNT4    138.00] AMP    23875.3   -85.20
508072 [NWTXARK7    345.00] AMP    13295.4   -85.57
508085 [TEX39ST2    69.000] AMP    14010.3   -81.49
508086 [TEXARK 2    69.000] AMP    15205.6   -82.29
510890 [CRAIGJT4    138.00] AMP     8604.8   -81.51
```

PSS(R)E-32.2.2 ASCC SHORT CIRCUIT CURRENTS MON, MAR 27 2017 10:27
2015 MDWG FINAL WITH 2013 MMWG, UPDATED WITH 2014 SERC & MRO
MDWG 2025S WITH MMWG 2024S, MRO & SERC 2025 SUMMER

OPTIONS USED:
- FLAT CONDITIONS
  - BUS VOLTAGES SET TO 1 PU AT 0 PHASE ANGLE
  - GENERATOR P=0, Q=0
  - TRANSFOMRER TAP RATIOS=1.0 PU and PHASE ANGLES=0.0
  - LINE CHARGING=0.0 IN +/-/0 SEQUENCE
  - LOAD=0.0 IN +/- SEQUENCE, CONSIDERED IN ZERO SEQUENCE
  - LINE/FIXED/SWITCHED SHUNTS=0.0 AND MAGNETIZING ADMITTANCE=0.0 IN +/-/0 SEQUENCE
  - DC LINES AND FACTS DEVICES BLOCKED
  - TRANSFORMER ZERO SEQUENCE IMPEDANCE CORRECTIONS IGNORED

THREE PHASE FAULT

```
X---------- BUS ----------X          /I+/    AN(I+)
917003 [G17003_T    69.000] AMP    11435.4   -80.63
508051 [ASHDOWN2    69.000] AMP    12727.3   -81.83
508066 [NEKOSAT2    69.000] AMP    11278.5   -80.48
916020 [GEN-2017-00369.000] AMP    10979.1   -80.63
507429 [PATTERS2    69.000] AMP    14082.5   -83.04
508081 [SUGHLET2    69.000] AMP    16543.1   -82.60
508094 [HOLOX  2    69.000] AMP     9918.9   -80.86
507421 [FOREMAN2    69.000] AMP     3651.0   -61.36
507431 [PATTERS4    138.00] AMP    12975.6   -82.31
508065 [NEKOOSA2    69.000] AMP     6238.0   -83.08
508079 [SUGARHL2    69.000] AMP    17293.0   -82.94
508084 [TEX12ST2    69.000] AMP    12765.7   -80.36
504029 [SFOREMAN  4 138.00] AMP     8271.4   -79.46
504123 [LOCKSBRG  4 138.00] AMP     5801.8   -79.34
504124 [ASHDWN_W  4 138.00] AMP     9796.2   -82.66
507402 [ASHDWNR4    138.00] AMP    10286.6   -83.21
507407 [FORMANR2    69.000] AMP     3529.8   -61.27
507434 [SNASHVL4    138.00] AMP     3692.6   -74.33
507440 [FOREMAG2    69.000] AMP     3140.7   -58.86
508071 [NWTXARK4    138.00] AMP    24472.0   -85.26
508080 [SUGARHL4    138.00] AMP    11996.8   -84.42
508082 [SUGHLWT2    69.000] AMP    16443.8   -82.52
508088 [WASHST 2    69.000] AMP    12921.4   -80.56
337672 [4MURFBORO   138.00] AMP     2880.5   -74.64
504030 [SFORE_1   2 69.000] AMP     2809.1   -88.22
504109 [NW_TEXAR  2 69.000] AMP    14332.0   -81.29
504120 [DEQUEEN   2 69.000] AMP     4747.2   -68.36
507428 [OKAY   4    138.00] AMP    10102.5   -84.02
507433 [SDIERKS4    138.00] AMP     3561.0   -76.99
507454 [TURK   4    138.00] AMP    23256.6   -86.23
508049 [NASH   4    138.00] AMP    19122.2   -84.54
508069 [NNBOSTN4    138.00] AMP    10500.6   -78.58
508070 [NWT-BNT4    138.00] AMP    23503.7   -85.13
508072 [NWTXARK7    345.00] AMP    13061.5   -85.48
508085 [TEX39ST2    69.000] AMP    13925.8   -81.47
508086 [TEXARK 2    69.000] AMP    15103.7   -82.25
510890 [CRAIGJT4    138.00] AMP     8591.4   -81.51
```