INTERCONNECTION FACILITIES STUDY REPORT

GEN-2016-106
(IFS-2016-002-65)

Published January 2021

By SPP Generator Interconnections Dept.

REVISION HISTORY

DATE OR VERSION NUMBER	AUTHOR	CHANGE DESCRIPTION
12/17/2020	SPP	Initial draft report issued.
01/19/2021	SPP	Final report issued with no change.

CONTENTS

SUMMARY

INTRODUCTION

This Interconnection Facilities Study (IFS) for Interconnection Request GEN-2016-106/IFS-2016-002-65 is for a 400 MW generating facility located in Keith, NE. The Interconnection Request was studied in the DISIS-2016-002 Impact Study for Energy Resource Interconnection Service (ERIS) and Network Resource Interconnection Service (NRIS). This request was restudied in the DISIS-2016-002 Impact Study for ERIS.The Interconnection Customer's requested in-service date is December 31st, 2019.

The interconnecting Transmission Owner, Nebraska Public Power District (NPPD), performed a detailed IFS at the request of SPP. The full report is included in Appendix A. SPP has determined that full Interconnection Service will be available after the assigned Transmission Owner Interconnection Facilities (TOIF), Non-Shared Network Upgrades, Shared Network Upgrades, Contingent Network Upgrades, and Affected System Upgrades that are required for full interconnection service are completed.

The primary objective of the IFS is to identify necessary Transmission Owner Interconnection Facilities, Network Upgrades, other direct assigned upgrades, cost estimates, and associated upgrade lead times needed to grant the requested Interconnection Service.

PHASE(S) OF INTERCONNECTION SERVICE

It is not expected that Interconnection Service will occur in phases. However, full Interconnection Service will not be available until all Interconnection Facilities and Network Upgrade(s) can be placed in service.

COMPENSATION FOR AMOUNTS ADVANCED FOR NETWORK UPGRADE(S)

FERC Order ER20-1687-000 eliminated the use of Attachment Z2 revenue crediting as an option for compensation. The Incremental Long Term Congestion Right (ILTCR) process will be the sole process to compensate upgrade sponsors as of July 1st, 2020.

INTERCONNECTION CUSTOMER INTERCONNECTION FACILITIES

The Generating Facility is proposed to consist of two-hundred (200) DFIG for a total generating nameplate capacity of 400 MW.

The Interconnection Customer's Interconnection Facilities to be designed, procured, constructed, installed, maintained, and owned by the Interconnection Customer at its sole expense include:

- 34.5 kV underground cable collection circuits;
- 34.5 kV to 345 kV transformation substation with associated 34.5 kV and 345 kV switchgear;
- Two 345/34.5 kV 133/176/221 MVA (ONAN/ONAF/ONAF) step-up transformer to be owned and maintained by the Interconnection Customer at the Interconnection Customer's substation;
- A 28 mile overhead mile overhead 345kV line to connect the Interconnection Customer's substation to the Point of Interconnection ("POI") at the 345 kV bus at existing Transmission Owner substation ("Gerald Gentleman Station 345 kV") that is owned and maintained by Transmission Owner;
- All transmission facilities required to connect the Interconnection Customer's substation to the POI;
- Equipment at the Interconnection Customer's substation necessary to maintain a composite power delivery at continuous rated power output at the high-side of the generator substation at a power factor within the range of 95% lagging and 95% leading in accordance with Federal Energy Regulatory Commission (FERC) Order 827. The Interconnection Customer may use Turbine manufacturing options for providing reactive power under no/reduced generation conditions. The Interconnection Customer will be required to provide documentation and design specifications demonstrating how the requirements are met; and,
- All necessary relay, protection, control and communication systems required to protect Interconnection Customer's Interconnection Facilities and Generating Facilities and coordinate with Transmission Owner's relay, protection, control and communication systems.

TRANSMISSION OWNER INTERCONNECTION FACILITIES AND NON-SHARED NETWORK UPGRADE(S)

To facilitate interconnection, the interconnecting Transmission Owner will perform work as shown below necessary for the acceptance of the Interconnection Customer's Interconnection Facilities.

Table 1 and **Table 2** lists the Interconnection Customer's estimated cost responsibility for Transmission Owner Interconnection Facilities (TOIF) and Non-Shared Network Upgrade(s) and provides an estimated lead time for completion of construction. The estimated lead time begins when the Generator Interconnection Agreement has been fully executed.

Table 1: Transmission Owner Interconnection Facilities (TOIF)

Transmission Owner Interconnection Facilities (TOIF)	Total Cost Estimate ($)	Allocated Percent (%)	Allocated Cost Estimate ($)	Estimated Lead Time
GEN-2016-106 Interconnection (TOIF) (NPPD) – UID 122682: Construct new satellite 345 kV Substation near GGS 345 kV substation to accommodate new interconnection request.	$0	N/A	$0	N/A
Total	**$0**		**$0**	

*TOIF costs are included in the Non-Shared NU costs. Upgrade ID #122683 contains the complete interconnection cost estimate provided by NPPD.

Non-Shared Network Upgrades Description	ILTCR	Total Cost Estimate ($)	Allocated Percent (%)	Allocated Cost Estimate ($)	Estimated Lead Time
GEN-2016-106 Interonnection (Non-Shared NU) (NPPD) – UID 122683: Construct new satellite 345 kV Substation near GGS 345 kV substation to accommodate new interconnection request.	Ineligible	$94,900,000	100%	$94,900,000	36 Months
Total		**$94,900,000**		**$94,900,000**	

Table 2: Non-Shared Network Upgrade(s)

SHARED NETWORK UPGRADE(S)

The Interconnection Customer's share of costs for Shared Network Upgrades is estimated in **Table 3** below.

Table 3: Interconnection Customer Shared Network Upgrade(s)

Shared Network Upgrades Description	ILTCR	Total Cost Estimate ($)	Allocated Percent (%)	Allocated Cost Estimate ($)	Estimated Lead Time
Antelope – Holt 345 kV CKT 1 (DISIS-2016-002-2) – 122699: Build approximately 30 miles of 345kV from Antelope – Holt with a minimum emergency rating of 1793 MVA.	Eligible	$70,000,000	28.21%	$19,747,000	48 Months
Keystone – Red Willow 345 kV CKT 1 (DISIS-2016-002-2) – 122700: Build approximately 110 miles of new 345kV from Keystone - Red Willow with a minimum normal/emergency rating of 1793 MVA.(DISIS-2016-002-2)	Eligible	$295,000,000	47.20%	$139,240,000	72 Months
Post Rock – Red Willow 345 kV (DISIS-2016-00202) (NPPD) – 122701: Build approximately 43 miles of new 345 kV from Post Rock - Nebraska Border with a minimum normal/emergency rating of 1793 MVA (DISIS-2016-002-2) - NPPD portion of the build.	Eligible	$111,000,000	58.94%	$65,423,400	72 Months
Post Rock – Red Willow 345 kV (DISIS-2016-002-2) (ITCGP) – 143174: Build approximately 134 miles of new 345 kV from Red Willow - Kansas Border with a minimum normal/emergency rating of 1793 MVA (DISIS-2016-002-2) - ITCGP portion of the build.	Eligible	$226,361,194	58.94%	$133,417,288	48 Months
Total		**$702,361,194**		**$357,827,688**	

*The "Antelope – Holt 345 kV CKT 1" Upgrade saw a reduction in cost from the DISIS results to the Facility Study provided by NPPD. The current cost in this IFS Summary reflects a +/-20% cost accuracy.

*The "Keystone – Red Willow 345kV" Upgrade saw a $120 Million increase in cost from the DISIS results to the Facility Study provided by NPPD. The current cost in this IFS Summary reflects a +/-20% cost accuracy.

*The "Post Rock – Red Willow 345 kV" Upgrade has been split according to ownership with NPPD and ITCPG.

All studies have been conducted assuming that higher-queued Interconnection Request(s) and the associated Network Upgrade(s) will be placed into service. If higher-queued Interconnection Request(s) withdraw from the queue, suspend or terminate service, the Interconnection Customer's share of costs may be revised. Restudies, conducted at the customer's expense, will determine the Interconnection Customer's revised allocation of Shared Network Upgrades.

CONTINGENT NETWORK UPGRADE(S)

Certain Contingent Network Upgrades are **currently not the cost responsibility** of the Interconnection Customer but will be required for full Interconnection Service.

Table 4: Interconnection Customer Contingent Network Upgrade(s)

Contingent Network Upgrade(s) Description	Current Cost Assignment	Estimated In-Service Date
NTC 200220 (R-Plan) - Build new 222 mile, 345 kV line from Gentleman - Cherry Co - Holt Co. Build new 345 kV substations at Cherry Co and Holt Co. Terminal upgrades at Gentleman.	$0	04/01/2024

Depending upon the status of higher- or equally-queued customers, the Interconnection Request's in-service date is at risk of being delayed or Interconnection Service is at risk of being reduced until the in-service date of these Contingent Network Upgrades.

AFFECTED SYSTEM UPGRADE(S)

To facilitate interconnection, the Affected System Transmission Owner will be required to perform the facilities study work as shown below necessary for the acceptance of the Interconnection Customer's Interconnection Facilities. **Table 5** displays the current impact study costs provided by MISO as part of the Affected System Impact review. The Affected System facilities study could provide revised costs and will provide each Interconnection Customer's allocation responsibilities for the upgrades.

Table 5: Interconnection Customer Affected System Upgrade(s)

Affected System Upgrades Description	Total Cost Estimate ($)	Allocated Share (%)	Allocated Cost Estimate ($)
MISO Affected System Impact Study SPP DISIS-2016-002: Structure replacements for Min Valley to Granite Falls 115kV line	$500,000	0%	$0
MISO Affected System Impact Study SPP DISIS-2016-002: Blackhawk 345kV + 150 MVAR SVC/STATCOM	$50,000,000	13.79%	$6,893,594
MISO Affected System Impact Study SPP DISIS-2016-002: Montezuma 345kV + 200 MVAR SVC/STATCOM	$60,000,000	18.94%	$11,366,286
MISO Affected System Impact Study SPP DISIS-2016-002: Wahpeton 115kV 3 x 20 MVAR capacitor banks	$3,000,000	7.92%	$237,605
MISO Affected System Impact Study SPP DISIS-2016-002: Hensel 69kV 1 x 20 MVAR capacitor bank	$1,000,000	3.36%	$33,556
MISO Affected System Impact Study SPP DISIS-2016-002: Lyon County 200 MVAR capacitor bank	$2,000,000	10.85%	$216,964
MISO Affected System Impact Study SPP DISIS-2016-002: Big Sand 69kV 2 x 7.5 MVAR capacitor banks	$650,000	14.01%	$91,084
Total	**$117,150,000**		**$18,839,089**

CONCLUSION

After all Interconnection Facilities and Network Upgrades have been placed into service, Interconnection Service for [Insert Interconnection Amount] MW can be granted. Full Interconnection Service will be delayed until the TOIF, Non-Shared NU, Shared NU, Contingent NU, Affected System Upgrades that are required for full interconnection service are completed. The Interconnection Customer's estimated cost responsibility for [Insert all upgrades (TOIF, non-shared NU, shared NU, affected system, etc)] that is required for full interconnection service is summarized in the table below.

Table 6: Cost Summary

Description	Allocated Cost Estimate
Transmission Owner Interconnection Facilitie Upgrade(s)	$0
Non-Shared Network Upgrade(s)	$94,900,000
Shared Network Upgrade(s)	$357,827,688
Affected System Upgrade(s)	$18,839,089
Total	**$471,566,777**

*Use the following link for Quarterly Updates on upgrades from this report: https://spp.org/spp-documents-filings/?id=18641

A draft Generator Interconnection Agreement will be provided to the Interconnection Customer consistent with the final results of this IFS report. The Transmission Owner and Interconnection Customer will have 60 days to negotiate the terms of the GIA consistent with the SPP Open Access Transmission Tariff (OATT).

APPENDICES

A: TRANSMISSION OWNER'S INTERCONNECTION FACILITIES STUDY REPORT AND NETWORK UPGRADES REPORT(S)

See next page for the Transmission Owner's Interconnection Facilities Study Report and Network Upgrades Report(s).

DISIS-2016-002-2
GENERATION INTERCONNECTION FACILITY STUDY

<u>NPPD</u>
SPP GEN-2016-074 200.0 MW at Sweetwater 345 kV Substation
SPP GEN-2016-106 400.0 MW at GGS 345 kV Substation

<u>WAPA/BEPC</u>
SPP GEN-2016-110 152.0 MW on LRS-Stegall 345 kV line

<u>TSGT</u>
SPP GEN-2016-147 40.0 MW at Sidney 115 kV Substation

SEPTEMBER 2020

PREPARED FOR:
SOUTHWEST POWER POOL

PREPARED BY:
NEBRASKA PUBLIC POWER DISTRICT OPERATIONS
TRANSMISSION ASSET PLANNING
T&D ENGINEERING & ASSET MANAGEMENT

Nebraska Public Power District
"Always there when you need us"

The *NPPD DISIS-2016-002-2 Facility Study* was performed to document the interconnection facilities and network upgrades for generation projects that are proposed to interconnect to the NPPD transmission system. These projects have developed through the SPP Definitive Interconnection System Impact Study process and have advanced to the facility study stage. SPP has requested that NPPD perform the Facility Study associated with the generation interconnection projects listed below:

Project	MW	Type	Point-of-Interconnection
GEN-2016-074	200.00	Wind	NPPD Sweetwater 345 kV
GEN-2016-106	400.00	Wind	NPPD GGS 345kV

GI requests for other TO's in Nebraska GI Group 9:

Project	MW	Type	Point-of-Interconnection
GEN-2016-110	152.00	Wind	WAPA/BEPC LRS-Stegall 345 kV
GEN-2016-147	40.00	Solar	TSGT Sidney 115 kV

SPP entered into a facility study agreement with each of the generation interconnection customers and subsequently requested that NPPD perform the Facility Study for each request. This facility study focused on the generation interconnection facilities and network upgrades identified in the SPP DISIS studies. The NPPD Facility Study includes detailed cost estimates and estimated project schedules for the interconnection and network upgrades identified in the SPP studies.

Interconnection Facilities & Network Upgrades

NPPD's Engineering, Asset Management, and Project Management groups have reviewed the list of interconnection facility and network upgrades that are required for DISIS-2016-002-2 projects. Detailed cost estimates have been prepared for the facility upgrades that were identified in the system impact study for the requests. The prepared cost estimates are study level estimates (+20%/-20%) and assume implementation of standard NPPD construction and procurement practices. The cost estimates for the interconnection facilities and network upgrades are below:

Interconnection Facilities

- GEN-2016-074: Expand existing Sweetwater 345 kV Substation to accommodate new GI.

$ 9,700,000

- GEN-2016-106: Construct satellite 345 kV Substation near GGS 345 kV substation to accommodate new GI. The existing GGS 345 kV substation is full and additional terminals at this location will require a remote satellite substations and re-route of existing transmission lines to interconnect the new satellite substation and the existing GGS 345 kV substation. This cost estimate is an initial proposed design which will need to be refined and validated through additional study work and field work to determine an acceptable long-term plan for new interconnections at this location. The current working assumption is a new satellite substation approximately 15-miles southwest of the existing GGS substation.

$ 94,900,000

Network Upgrades

- Construct Keystone – Red Willow 345 kV line & substation expansions.

$ 295,000,000

- Construct Red Willow – Post Rock 345 kV line (portion of line in State of Nebraska) & Red Willow substation expansion.

$ 111,000,000

- Construct Holt County – Antelope 345 kV line & substation expansions.

$ 70,000,000

The results of DISIS-2016-002-2 documented that these requests are contingent on the completion of the following previously-allocated required network upgrades:

- Gentleman – Thedford - Holt County (R-Project) and Thedford 345/115 kV Transformer project

The substation one-line diagrams highlighting the required facility upgrades for each generator interconnection are on the following pages. NPPD will work with the generation interconnection projects to develop project schedules for the interconnection facilities and network upgrade projects listed above during the development of the generation interconnection agreement. Typical implementation schedules for new transmission lines (≥ 115 kV) are roughly 4 years or longer to accommodate the public routing process and construction schedules. For the DISIS-2016-002-2 network upgrades (Keystone – Red Willow – Post Rock), the construction schedule will likely be much

longer (> 6 Years) due to the length of the projects and complex project scope involving multiple state jurisdictions. Substation additions require less land acquisition and typically can be implemented in less time or approximately 2-3 years. Project schedule details will be further discussed in the development of the generator interconnection agreement (GIA) and the milestones associated with the generation interconnection projects.

It should also be noted that the interconnection plan for the DISIS-2016-002-2 generation projects are dependent on the transmission upgrades/additions that are required as part of the previous SPP DISIS GI Studies and SPP ITP Studies. If there are any modifications to these previous studies and related upgrades, then the interconnection plan for the DISIS-2016-002-2 projects could be affected. There is no interconnection capacity for the DISIS-2016-002-2 projects without the previously identified upgrades.

If the generation interconnection projects proceed to the generation interconnection agreement, then an operating study may need to be performed to fully assess and evaluate the operation of the generation facility and network upgrades in accordance with NERC Standards. The operating study requirement will be included in the generation interconnection agreement with NPPD. The generation interconnection projects will have significant impact on the GGS Stability Interface (Flowgate #6006) and LRS/DC stability limitations in western NE and the operating study will need to take these issues into account.

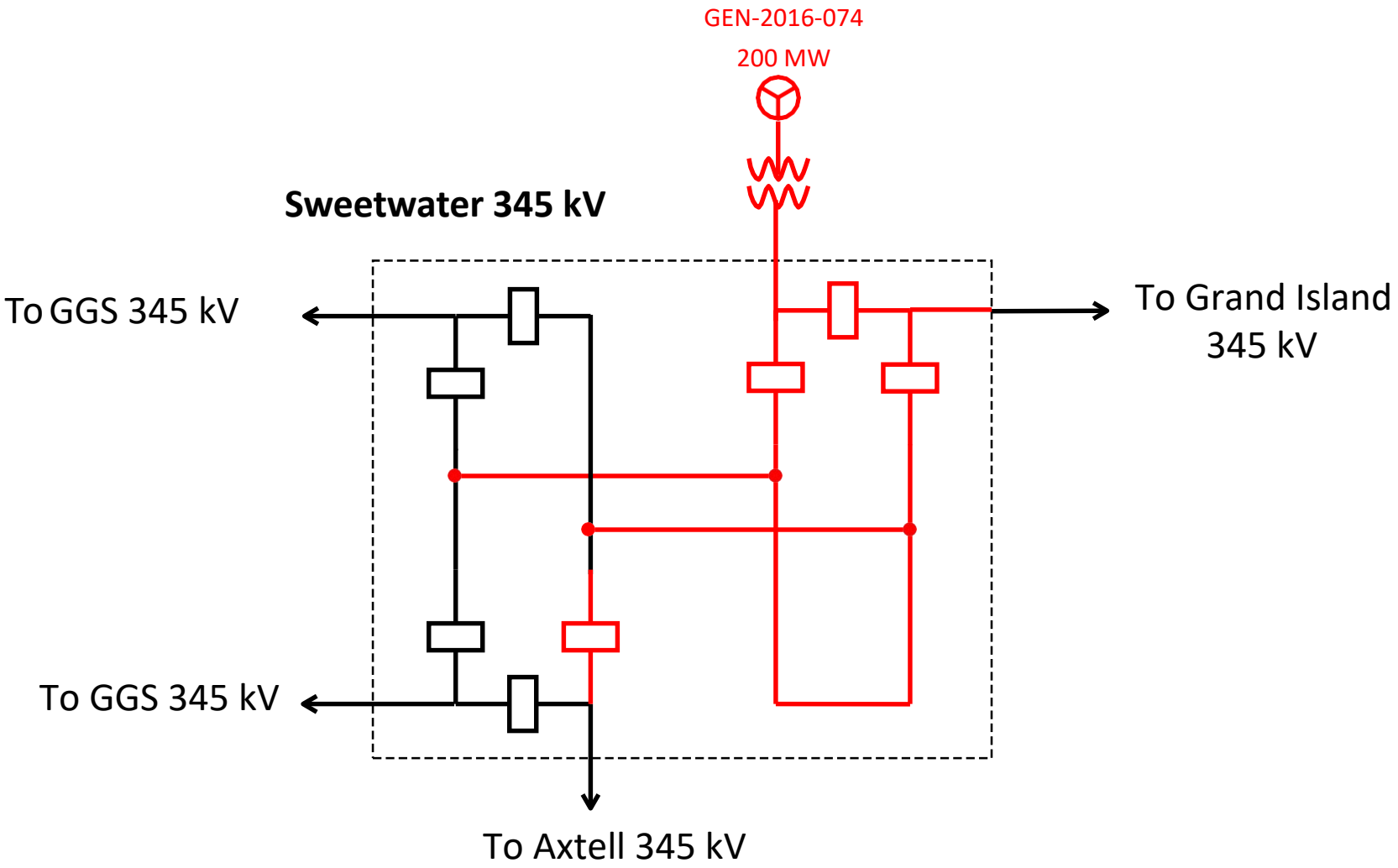

- DISIS-2016-002 Interconnection Facilities for GEN-2016-074

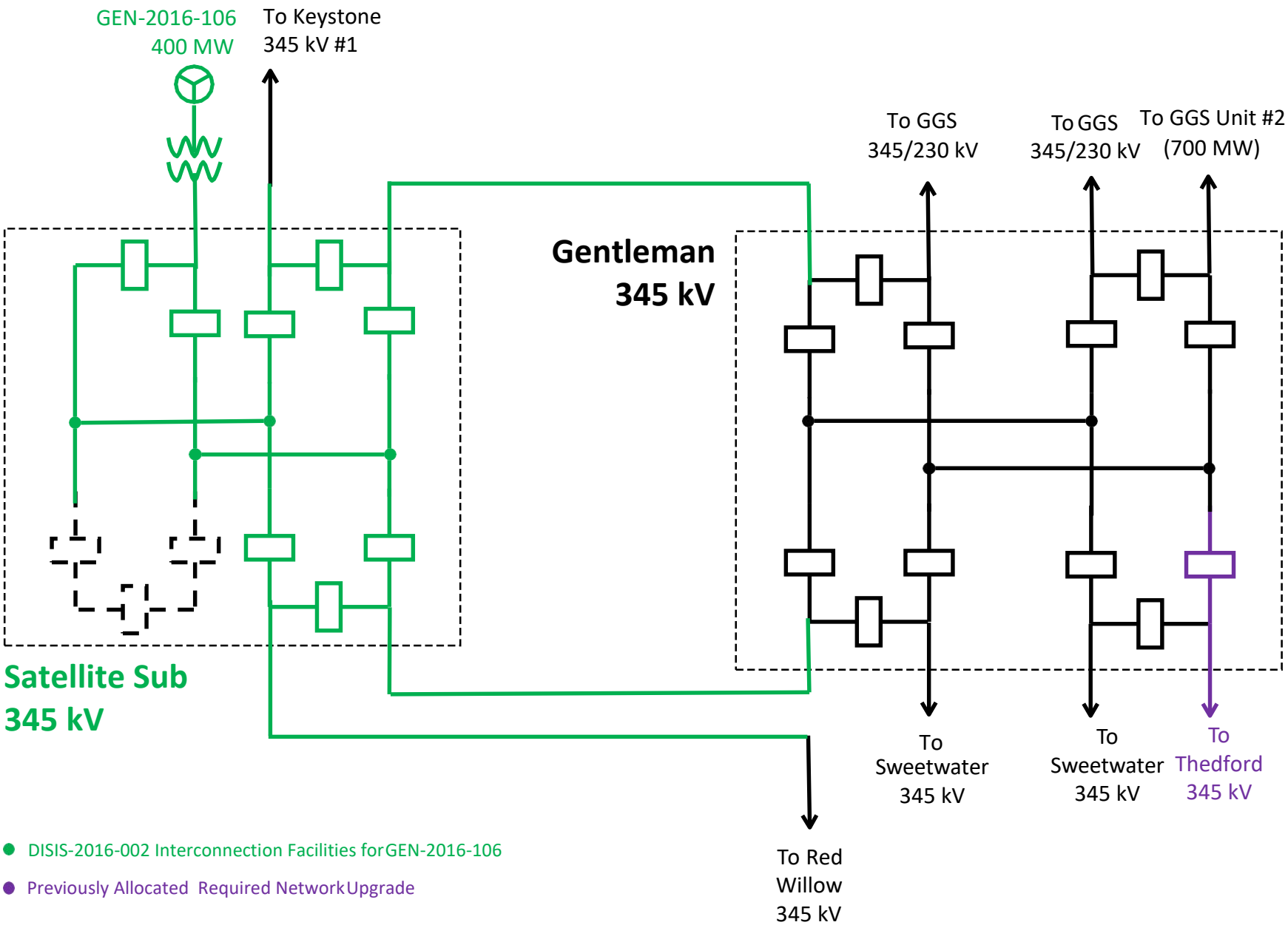
GEN-2016-106
400 MW
To Keystone
345 kV #1
To GGS
345/230 kV
To GGS
345/230 kV
To GGS Unit #2
(700 MW)
Gentleman
345 kV
Satellite Sub
345 kV
To
Sweetwater
345 kV
To
Sweetwater
345 kV
To
Thedford
345 kV
To Red
Willow
345 kV
DISIS-2016-002 Interconnection Facilities for GEN-2016-106
Previously Allocated Required Network Upgrade

Facilities Study Report
Post Rock to Red Willow 345kV line
November 9, 2020

Table of Contents

1.0 Overview

ITC Great Plains ("ITCGP") has performed a facility study at the request of the Southwest Power Pool ("SPP") for a proposed SPP GI Network upgrade of Post Rock (ITCGP) to Red Willow (NPPD) 345kV line assigned to Interconnection Customer(s) during the DISIS-2016-002-2 impact restudy. This facility study was reviewed and revised after the DISIS-2016-002-1 Impact Restudy was completed. The subject request entails building an approximate 150 mile, 345kV line from the ITCGP owned Post Rock 345kV substation NW of Hays, Kansas to the NPPD owned Red Willow 345kV Substation in Nebraska. The change of ownership of the line would occur at the Kansas / Nebraska border.

The ITCGP scope of this Facility Study is to provide a cost estimate for the network upgrades at Post Rock and the Kansas portion of 345kV line which would be approximately 130 miles. For this +/- 20% estimate ITCGP and NPPD have agreed on a change of ownership at the KS/ NE border. This change of ownership location will be finalized later in the approval process.

Please note that because ITCGP is working with an estimated line route (see Figure 2), the actual costs could vary more than +20% after the Kansas Corporation Commission approves a final route. The actual line routing will also allow for soil borings to be taken, which could change the type of tower foundation that is used. ITCGP has done the best it can with the limited information that is available for this project at this time. Also note, that the cost estimate provided is valid for one year, after which time an inflation rate of 2.5% would need to be applied for future years up to 2 years. After a 2 year period of time has elapsed, ITCGP reserves the right to provide a new and updated cost estimate.

1.1 Facility Study Summary

ITCGP estimates the total project cost of the upgrades at Post Rock and the ITCGP portion of 150 miles of 345kV line will be **$ 226,361,194 (**+/ - 20 % accuracy) including applicable company overheads and contingencies in 2020 dollars. This includes $5,833,054 for upgrades at Post Rock and $220,528,140 for 130 miles of 345kV line.

It is further estimated that the required regulatory/legal/real estate acquisition, design/procurement, and construction activities will require approximately 48 months after SPP issues the NTC. The attached report contains additional details regarding the estimate including results of a preliminary review of reactive compensation

Network Upgrades at Post Rock will consist of the following:

- Expanding the existing substation, adding three (3) 345kV breaker and associated disconnects, converting from a ring bus configuration to a breaker and a half configuration.
- Moving the 55 MVAR and 40 MVAR reactors from the line connection to a buss connection, and associated relay and protection control panels.
- Building approximately 130 miles of new, single circuit, 345kV line

2.0 Network Upgrades

2.1 ITCGP owned Post Rock 345kV Substation Upgrades

The substation upgrades will involve expanding the existing substation approximately 70 feet and adding three 345kV breakers and associated disconnects to complete the breaker and a half configuration. The 55 MVAR line connected reactor will be disconnected from the Spearville to Post Rock line and reconnected to the north buss. The 40 MVAR line connected reactor will be disconnected from the Post Rock to Axtell line and relocated and connected to the South buss. This Reactor configuration is the best engineering

estimate of what is needed and is subject to change following a full reactor study, which will be performed after an NTC is issued for this work. The alternative solution is to leave the existing reactors in place and add a third line connected reactor to the new Post Rock to Red Willow line.

2.1.1 Design Criteria:
The Transmission Owner's standards will be applicable. Where no applicable standards are available, the Transmission Owner will substitute industry standards and other good utility practices.

2.1.2 One-Line Diagram:
See Figure 1 for Transmission Owner One-Line.

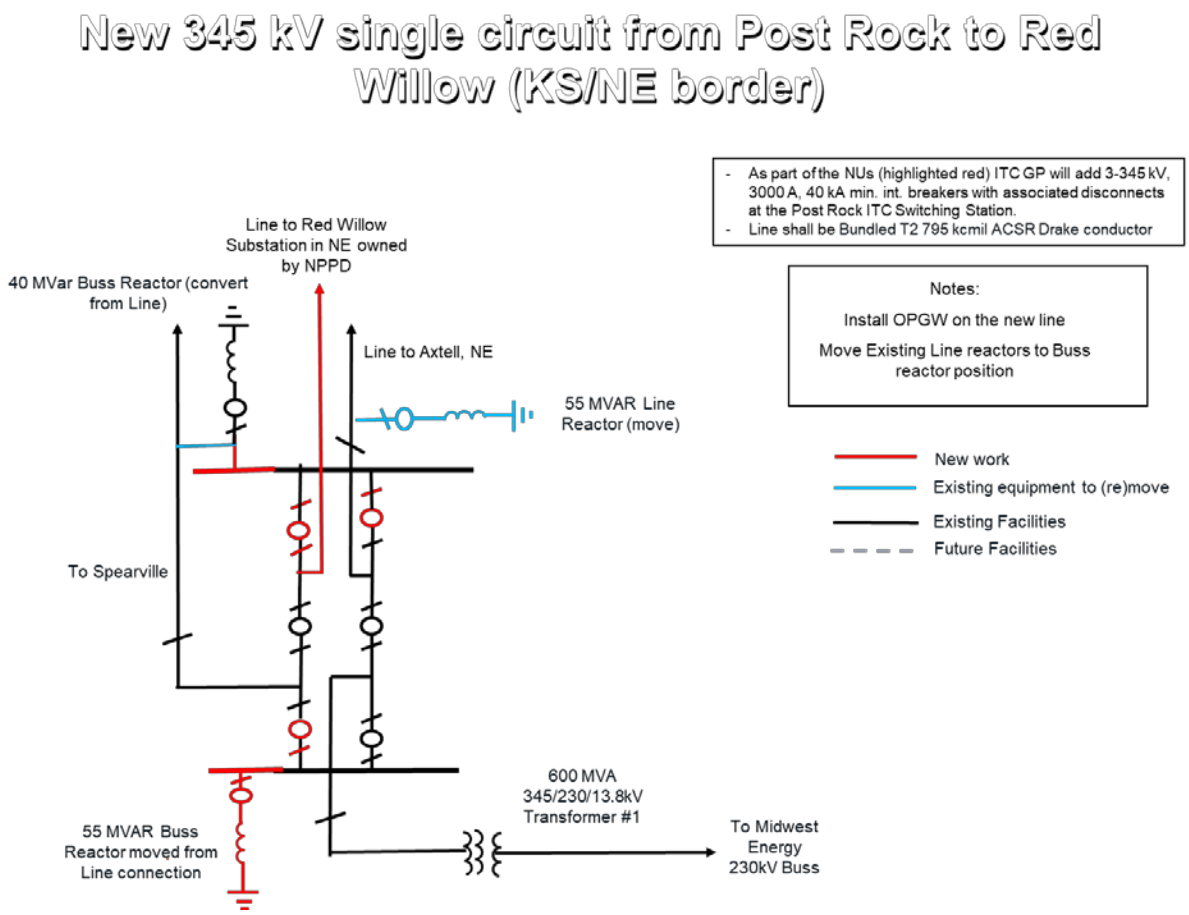

Figure 1 Post Rock Substation Upgrades

2.1.3 Existing Site plan

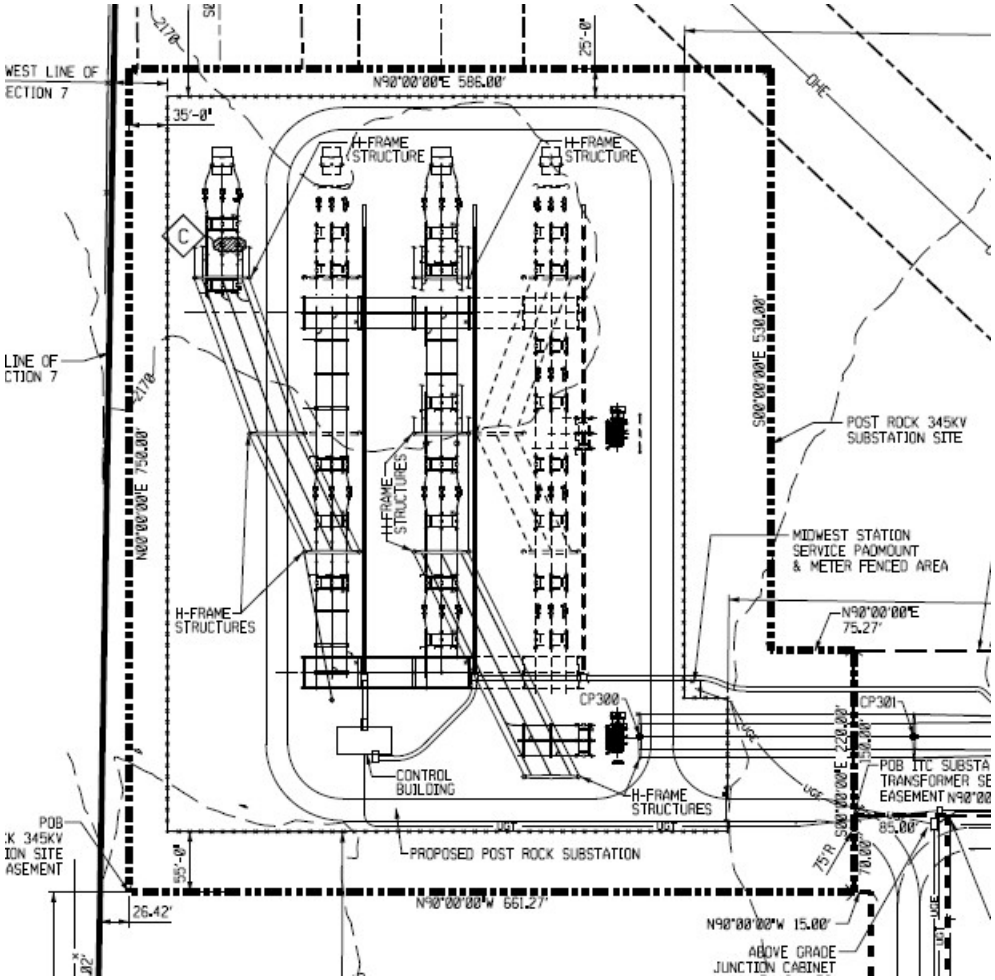

2.1.4 Permitting:
ITCGP will be responsible for satisfying all community or governmental site plan or zoning approval requirements which may include wetland or flood plain permits. ITCGP will also be responsible for filing and obtaining state approval from the Kansas Corporation Commission for the new single circuit 345 kV line.

2.1.5 Protection & Control Overview:
One set of 345kV CCVTs will be installed.
OPGW will be installed.
Two 345kV breaker control panels with microprocessor based relays will be installed. Breaker failure protection, automatic reclosing supervised by synchronism check will be provided.
One 345kV line relaying panel with microprocessor based relays will be installed.
One 345kV reactor replaying panel with microprocessor based relays will be installed.

2.1.6 Insulation Coordination:
345kV, 1050kV BIL

2.1.7 Reactive Compensation:

ITCGP evaluated the impact of the new proposed line on the reactive compensation equipment presently planned or in service at Post Rock. ITCGP preliminary studies concluded that moving the existing reactive compensation from the lines to the busses is required to account for Ferranti Voltage rise. An alternative approach would be to install a new reactor on the Post Rock to Red Willow line. The sizing of the reactor will be further refined in additional studies after the NTC is issued.

2.1.8 Other Equipment & Materials:

- Gas Circuit Breakers (GCB): four (4) 345 kV, 3000A rated, 63kAIC.
- Disconnect Switch: five (5) 345 kV, 3000A rated, 1050 kV BIL.
- CCVTs: three (3) 345kV, 3-winding, 1550kV BIL.
- Insulators: twelve (12) 345 kV, 1050 kV BIL station post, porcelain.
- Surge Arresters: four (4) 345kV, vertical mount, 209MCOV, polymer.
- Control Cable: Control cables per Transmission Owner standards will be installed in direct buried PVC conduits, above grade LFMC conduits and in pre-cast cable trench. All control cables from the yard will be terminated at the relaying control panels. The control building will have overhead cable trays for necessary cable runs and inter-panel connections.

2.1.9 Relaying, Control, & SCADA:
<u>Panel Requirements</u>

- 2 – RD3064 – Tie Breaker Control (SEL-351S)
- 1 – RD2500 – Reactor protection (SEL-387E & SEL-551)
- 1 – RD3048 – Line Current Differential (SEL-311L)

2.1.10 Grounding System:
The grounding system will be designed and installed per Transmission Owner's standards. These standards follow the IEEE 80 standards.

2.1.11 Lightning Shielding Design:
Lightning shielding will be provided per Transmission Owner's standards. Multiple H-frame structures along with shield wire will be used for lightning protection.

2.1.12 Yard Lighting:
Yard lighting will be installed to be sufficient for visual indication of the disconnect switch positions or egress of personnel, and will not serve as task lighting.

2.1.13 Structures:
The required new outdoor steel structures listed below will be hot-dipped galvanized wide flange structures or tubular steel:

- Five (5) 345 kV disconnect switch stands
- One (1) 345 kV bus support
- Two (2) H-frame line entrance structures
- One (1) 345kV CCVT stands

- Five (5) 345kV surge arrester stands

2.1.13 Foundations:
Foundations and slabs will be designed and installed in accordance with the owner's standards and specifications. The minimum design depth to firm bearing is contingent upon soil borings at the site.

2.1.14 Site Work:
Site grading will be required for the moving of the reactors.

2.1.14 Scheduling Requirements:

Detailed routing study	4 months
Regulatory Approval	7 months
Legal/Real Estate Procurement	12 months
Design	Concurrent with other tasks
Material Procurement	6 months
MVAR Procurement	18 months
Substation Construction	8 months
Line Construction	18 months
Closeout Activities	1 month
Total schedule	48 months (Accumulation of critical path tasks)

2.1.15Total Substation upgrade cost: $5,833,054
Total Cost Estimate Accuracy: +/- 20%

Note that the cost estimate provided is expressed in 2020 dollars and includes applicable company overheads and contingencies.

2.2 ITCGP portion of 150 miles of Post Rock to Red Willow 345kV line

2.2.1 Project Location:
ITCGP will build approximately 130 miles of the line. For this facility study estimate we are assuming 130 miles of line up to the KS/ NE border. See Figure 2 for preliminary routing map

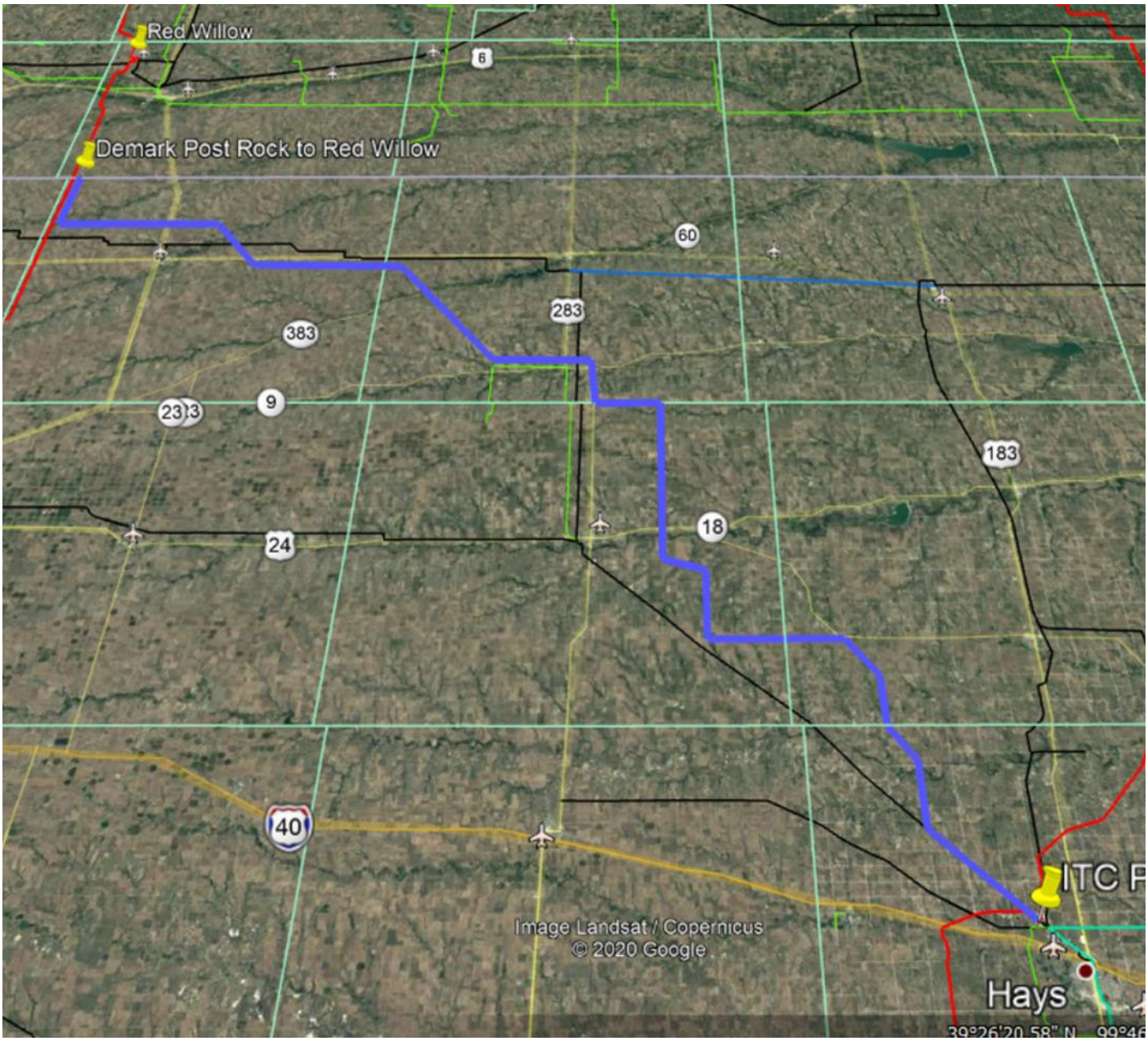

Figure 2 Preliminary routing of ITCGP owned line

2.2.2 Project Overview:
This project involves constructing approximately 130 miles of 345kV line

2.2.3 Design Criteria:
Design Standards will be ITCGP Standards. Where no applicable standards are available, ITCGP will utilize industry standards and good Utility practices.

2.2.6 Route Information**:**

See figure 2 for preliminary routing of the line. A detailed routing study will be required to finalize the routing before starting construction.

2.2.7 Right-of-Way Information:
Please see section 3 for general guidelines.

2.2.8 Permitting:
Same as that covering section 2.1.4

2.2.9 Metering & Ownership Demarcation: N/A

2.2.10 Protection & Control Overview: N/A

2.2.11 Insulation Coordination: N/A

2.2.12 Other Equipment's & Materials: **N**/A

2.2.13 Relaying, Control, & SCADA: N/A

2.2.14 Grounding System: N/A

2.2.15 Lightning Shielding Design:
Lightning shielding design will be in accordance with the ITCGP's standards and specifications.

2.2.16 Yard Lighting: N/A

2.2.17 Structures:
The new transmission line structures will be 345 kV galvanized or Corten steel monopoles, pending the most feasible and appropriate design.

2.2.18 Foundations:
Foundations will be designed and installed in accordance with the Transmission Owner's standards and specifications. The transmission structure foundations will be drilled piers for deadends and angles and direct embedded steel for tangents.

2.2.19 Conductors, Shield Wires, & OPGW:
The conductor will be a bundled T2-795 kcmil (26/7) ACSR "Drake" per phase. The shield wire will be 159 kcmil (12/7) ACSR "Guinea." and 0.555 OPGW 36 Fiber AC-26/39/555

2.2.20 Insulators:
Insulators will be 345 kV polymer insulators.

2.2.21 Removal of Existing Facilities:
TBD – tentatively no existing facilities will be removed.

2.2.22 Site Work: N/A

2.2.23 Total line cost: $220,528,140

Total Cost of Substation upgrades and Line: $226,361,194

Total Cost Estimate Accuracy: +/- 20%

Note that the cost estimate provided is expressed in 2020 dollars and includes applicable company overheads and contingencies.

3.0 Right of Way Requirements and Environmental Approvals

ITCGP shall obtain easements from the land owners to work in or drive through the transmission line right-of-way. For the Network Upgrades identified in this report, ITCGP agrees to obtain all necessary easements/right-of-way as required to construct those facilities that will be owned and operated by ITCGP. ITCGP will work with respective environmental agencies for various environmental approvals. This includes wildlife and environmental mitigation.