Definitive Interconnection System Impact Study for Generation Interconnection Requests

(DISIS-2015-001)

Posted July 2015

Re-Posted August 2015

Generator Interconnection

Southwest Power Pool

Revision History

Date	Author	Change Description
07/30/2015	SPP	Report Issued (DISIS-2015-001). Group 2, 5, 6, and 7 Interconnection Request Results not included in this issue.
08/28/2015	SPP	Report Reissued (DISIS-2015-001) to include Group 2, 5, 6, and 7 Interconnection Requests Results

Executive Summary

Pursuant to the Generator Interconnection Procedures (GIP) of the Southwest Power Pool (SPP) Open Access Transmission Tariff (OATT), SPP has conducted this Definitive Interconnection System Impact Study (DISIS). The Interconnection Customers' requests have been clustered together for the following System Impact Cluster Study window which closed March 31, 2015. The Interconnection Customers will be referred to in this study as the DISIS-2015-001 Interconnection Customers. This System Impact Study analyzes the interconnecting of multiple generation interconnection requests associated with new generation totaling approximately 5,460.29 MW of new generation which would be located within the transmission systems of American Electric Power – Western (AEPW), Kansas City Power and Light Company – Greater Missouri Operations Company (KCPL-GMO), Grand River Dam Authority (GRDA), Kansas City Power and Light Company (KPCL), Midwest Energy, Inc. (MIDW), Nebraska Public Power District (NPPD), Oklahoma Gas and Electric (OKGE), Southwestern Public Service (SPS), Sunflower Electric Power Corporation\Mid-Kansas Electric Company, LLC (SUNC\MKEC), Westar Energy, Inc. (WERE), and Western Farmers Electric Cooperative (WFEC). The various generation interconnection requests have differing proposed in-service dates[1]. The generation interconnection requests included in this System Impact Cluster Study are listed in Appendix A by their queue number, amount, requested interconnection service, area, requested interconnection point, proposed interconnection point, and the requested in-service date. A separate analysis for each Interconnection Request for "Stand-Alone" operation has also been performed. The "Stand-Alone" analysis shows results for each Interconnection Request if no other Interconnection Requests in the cluster study move forward. This Stand Alone analysis also includes an analysis of Limited Operation that determines available Interconnection Service if constraints are identified in the "Stand-Alone" scenario.

Power flow analysis has indicated that for the power flow cases studied, 5,460.29 MW of nameplate generation may be interconnected with transmission system reinforcements within the SPP transmission system. Dynamic stability and power factor analysis has determined the need for reactive compensation in accordance with SPP stability and voltage recovery requirements including FERC Order #661A for wind farm interconnection requests. Those reactive requirements are listed for each interconnection request within this report. Dynamic stability analysis has determined that the transmission system will remain stable with the assigned Network Upgrades and necessary reactive compensation requirements. Certain measures for mitigation of the Gentleman Stability Interface have yet to be determined as of the posting of this DISIS. These measures will be further analyzed in the Interconnection Facilities Study phase. A short circuit analysis has been performed with available short circuit values given in the stability study for each

[1] The generation interconnection requests in-service dates may need to be deferred based on the required lead time for the Network Upgrades necessary. The Interconnection Customers that proceed to the Facility Study will be provided a new in-service date based on the Facility Study's time for completion of the Network Upgrades necessary or as otherwise provided for in the GIP.

group in the appendices of this report. A short circuit analysis has been performed with available short circuit values given in the stability study for each group in the appendices of this report.

In no way does this study guarantee operation for all periods of time. This interconnection study identifies and assigns transmission reinforcements for Energy Resource Interconnection Service (ERIS) interconnection injection constraints (defined as a 20% or greater distribution factor impact for outage based constraints and 3% or greater distribution factor impact for system intact constraints) and Network Resource Interconnection Service (NRIS) constraints (defined as 3% or greater distribution factor impact), if requested by the Customer. These constraints are listed in Appendix G. This interconnection study does not assign transmission reinforcements for all potential transmission constraints. It should be noted that although this study analyzed many of the most probable contingencies, it is not an all-inclusive list and cannot account for every operational situation. Because of this, it is likely that the Interconnection Customer(s) may be required to reduce their generation output to 0 MW, also known as curtailment, under certain system conditions to allow system operators to maintain the reliability of the transmission network.

The total estimated minimum cost for interconnecting the DISIS-2015-001 Interconnection Customers is estimated at $1,102,966,416 plus the costs associated with mitigating certain other constraints including the Gentleman Stability Interface. These costs determined at this time are shown in Appendix E and F. Interconnection Service to DISIS-2015-001 Interconnection Customers is also contingent upon higher queued customers paying for certain required network upgrades. **The in-service date for the DISIS customers will be deferred until the construction of these network upgrades can be completed.** These costs also do not include the Interconnection Customer Interconnection Facilities as defined by the SPP Open Access Transmission Tariff (OATT) or the additional SPP transmission network constraints identified through this study and shown in Appendix H.

Constraints listed in Appendix H do not require transmission reinforcement for Interconnection Service, but could require Interconnection Customer to reduce generation in operational conditions. These transmission constraints occur when this study's generation is dispatched into the SPP footprint for Energy Resource Interconnection Service (ERIS) or when this study's generation is dispatched into the interconnecting Transmission Owner's (T.O.) area for Network Resource Interconnection Service (NRIS).

It should be noted that the additional network constraints identified in Appendix H may also be identified by a Transmission Service Request (TSR) and may need to be verified by associated studies. With a defined source and sink in a TSR, the list of network constraints will be refined and expanded to account for all Network Upgrade requirements. The required interconnection costs listed in Appendix E and F do not include costs associated with the deliverability of the energy to load or other customers. These costs are determined by separate studies should the Customer decide to submit a Transmission Service Request through SPP's Open Access Same Time Information System (OASIS) as required by Attachment Z1 of the SPP OATT. Furthermore, this DISIS neither guarantees transmission service or deliverability of the requested resource.

Table of Contents

Introduction **1**

Model Development **2**

Development of Base Cases 2

Identification of Network Constraints **6**

Determination of Cost Allocated Network Upgrades **7**

Required Interconnection Facilities **8**

Power Flow Analysis **9**

Power Flow Results **9**

Curtailment and System Reliability 25

Stability & Short Circuit Analysis **26**

Conclusion **34**

Appendices **35**

A: Generation Interconnection Requests Considered for Impact Study A-0
B: Prior Queued Interconnection Requests B-0
C: Study Groupings C-0
D: Proposed Point of Interconnection One Line Diagrams D-0
E: Cost Allocation per Interconnection Request (Including Prior Queued Upgrades) E-0
E1: Stand Alone Cost Allocation per Interconnection Request (Including Prior Queued Upgrades) E1-0
F: Cost Allocation per Proposed Study Network Upgrade F-0
G: Power Flow Analysis (Constraints Used For Mitigation) G-0
G1: Stand Alone Power Flow Analysis (Constraints Used For Mitigation) G1-0
H: Power Flow Analysis (Other Constraints Not Requiring Mitigation) H-0
H1: Stand Alone Power Flow Analysis (Other Constraints Not Requiring Mitigation) H1-0
I: Power Flow Analysis (Constraints from Multi-Contingencies) I-0
J: Group 1 Dynamic Stability Analysis Report J-0
K: Group 2 Dynamic Stability Analysis Report K-0
L: Group 3 Dynamic Stability Analysis Report L-0
M: Group 4 Dynamic Stability Analysis Report M-0
N: Group 5 Dynamic Stability Analysis Report N-0
0: Group 6 Dynamic Stability Analysis Report O-0
P: Group 7 Dynamic Stability Analysis Report P-0
Q: Group 8 Dynamic Stability Analysis Report Q-0
R: Group 9 Dynamic Stability Analysis Report R-0
S: Group 12 Dynamic Stability Analysis Report S-0
T: Group 13 Dynamic Stability Analysis Report T-0

Introduction

Pursuant to the Southwest Power Pool (SPP) Open Access Transmission Tariff (OATT), SPP has conducted this Definitive Interconnection System Impact Study (DISIS) for certain generation interconnection requests in the SPP Generation Interconnection Queue. These interconnection requests have been clustered together for the following System Impact Study window which closed March 31, 2015. The customers will be referred to in this study as the DISIS-2015-001 Interconnection Customers. This DISIS analyzes the interconnecting of multiple generation interconnection requests associated with new generation totaling 5,460.29 MW of new generation which would be located within the transmission systems of American Electric Power – Western (AEPW), Kansas City Power and Light Company – Greater Missouri Operations Company (KCPL-GMO), Grand River Dam Authority (GRDA), Kansas City Power and Light Company (KPCL), Midwest Energy, Inc. (MIDW), Nebraska Public Power District (NPPD), Oklahoma Gas and Electric (OKGE), Southwestern Public Service (SPS), Sunflower Electric Power Corporation\Mid-Kansas Electric Company, LLC (SUNC\MKEC), Westar Energy, Inc. (WERE), and Western Farmers Electric Cooperative (WFEC). The various generation interconnection requests have differing proposed in-service dates[2]. The generation interconnection requests included in this System Impact Study are listed in Appendix A by their queue number, amount, requested interconnection service, area, requested interconnection point, proposed interconnection point, and the requested in-service date. A separate analysis for each Interconnection Request for "Stand-Alone" operation has also been performed. The "Stand-Alone" analysis shows results for each Interconnection Request if no other Interconnection Requests in the cluster study move forward. The "Stand-Alone" analysis also includes an analysis of Limited Operation that determines available Interconnection Service if constraints are identified in the "Stand-Alone" scenario.

The primary objective of this DISIS is to identify the system constraints, transient instabilities, and over-dutied equipment associated with connecting the generation to the area transmission system. The Impact Study and other subsequent Interconnection Studies are designed to identify required Transmission Owner Interconnection Facilities, Network Upgrades and other Direct Assignment Facilities needed to inject power into the grid at each specific point of interconnection.

[2] The generation interconnection requests in-service dates may need to be deferred based on the required lead time for the Network Upgrades necessary. The Interconnection Customers that proceed to the Facility Study will be provided a new in-service date based on the completion of the Facility Study or as otherwise provided for in the GIP.

Model Development

Interconnection Requests Included in the Cluster

SPP included all interconnection requests that submitted a Definitive Interconnection System Impact Study Agreement no later than March 31, 2015 and were subsequently accepted by Southwest Power Pool under the terms of the Generator Interconnection Procedures (GIP) that were in effect at the time this study commenced on April 1, 2015. The interconnection requests that are included in this study are listed in Appendix A.

Affected System Interconnection Request

Also included in this Definitive Interconnection System Impact Study are four (4) Affected System Studies. The Affected System Interconnection Requests have been given the designations with the "ASGI" prefix. These requests are listed in Appendix A. Affected System Interconnection Requests were only studied in "cluster" scenarios.

Previously Queued Interconnection Requests

The previous queued requests included in this study are listed in Appendix B. In addition to the Base Case Upgrades, the previous queued requests and associated upgrades were assumed to be in-service and added to the Base Case models. These projects were dispatched as Energy Resources Interconnection Service (ERIS) with equal distribution across the SPP footprint. Prior queued projects that requested Network Resource Interconnection Service (NRIS) were also dispatched in separate NRIS scenarios into the balancing authority of the interconnecting transmission owner.

Development of Base Cases

Power Flow

The 2014 series Integrated Transmission Planning models (used in the 2015 ITPNT) including the 2015 (spring and summer peak seasons), the 2020 (summer and winter peak seasons), and the 2025 (summer peak season) scenario 0 cases are used for this study. After the cases are developed, each of the control areas' resources are then re-dispatched to account for the new generation requests using current dispatch merit-orders. Planned High Priority Incremental Loads (HPILs) are also accounted for in these models.

Dynamic Stability

The 2014 series SPP Model Development Working Group (MDWG) Models for the 2015 (summer and winter peak seasons), and 2025 (summer peak season) cases were used as starting points for this study.

Short Circuit

The 2025 summer peak stability case is used for this analysis.

Base Case Upgrades

The following facilities are part of the SPP Transmission Expansion Plan, the Balanced Portfolio or recently approved Priority Projects. These facilities have an approved Notification to Construct (NTC) or are in construction stages and were assumed to be in-service at the time of dispatch and

added to the base case models. The DISIS-2015-001 Interconnection Customers have not been assigned advancement costs for the below listed projects. The DISIS-2015-001 Interconnection Customers Generation Facilities in service dates may need to be delayed until the completion of the following upgrades. In some cases, the in-service date is beyond the allowable time a customer can delay. In this case, the Interconnection Customer may move forward with Limited Operation or remain in the DISIS Queue for additional study cycles. If for some reason, construction on these projects is discontinued, additional restudies will be needed to determine the interconnection needs of the DISIS Interconnection Customers.

- 2012 Integrated Transmission Plan (2012 ITP10) Projects
  - Woodward-Tatonga-Mathewson-Cimarron 345kV transmission line, scheduled for 2021 in-service[3]
  - Chisholm – Gracemont 345kV transmission line, and Chisholm 345/230kV transformer circuit #1, scheduled for 3/1/2018 in-service[4]
- 2015 Integrated Transmission Plan Near Term (2015 ITPNT) Projects
  - China Draw 115kV Reactive Power Support
    - 200Mvar Capacitive and 50Mvar Inductive Static Var Compensator (SVC)
  - Road Runner 115kV Reactive Power Support
    - 200Mvar Capacitive and 50Mvar Inductive Static Var Compensator (SVC)
  - Agave Hill 115kV reactive Power Support
    - 28.8Mvar Capacitor Bank(s)
  - Potash Junction – Intrepid – IMC #1 – Livingston Ridge 115kV rebuild
  - National Enrichment Plant – Targa – Cardinal 115kV circuit #1 rebuild
- Nebraska City – Mullin Creek – Sibley 345kV circuit #1 build, scheduled for 12/31/2016 in-service[5]
- Northwest 345/138/13.8 kV circuit #3 autotransformer, scheduled for 6/1/2015 in-service[6]
- Hoskins – Neligh East 345/115 kV Project[7]
  - Neligh East 345/115 kV substation and transformer
  - Neligh East Area 115 kV upgrades to support new station
  - Hoskins – Neligh East 345 kV circuit #1
- High Priority Incremental Loads (HPILs) Projects[8]:
  - TUCO Interchange – Yoakum – Hobbs Interchange 345/230 kV Project
    - TUCO Interchange – Yoakum – Hobbs Interchange 345 kV circuit #1 and associated terminal equipment upgrades
    - Hobbs 345/230/13 kV transformer circuit #1
    - Yoakum 345/230/13 kV transformer circuit #1

[3] SPP Notification to Construct (NTC) 200223
[4] SPP Notification to Construct (NTC) 200240 and 200255
[5] SPP Notification to Construct (NTC) 20097 and 20098
[6] SPP Transmission Service Project identified in SPP 2009-AG2-AFS6. Per SPP NTC 20137 & 200194
[7] SPP Regional Reliability 2012 ITP 10 Project Per SPP-NTC-200220
[8] Per Network Upgrades assigned in High Priority Incremental Loads (HPILs) study, Including Direct Assigned Upgrades, Projects in SPP-NTC-200256 and SPP-NTC-200283.

- Battle Axe – Road Runner 115 kV circuit #1
- Chaves County – Price – CV Pines – Capitan 115 kV circuit #1
- China Draw – Yeso Hills 115 kV circuit #1
- Dollarhide – Toboso Flats 115 kV circuit #1
- Hobbs Interchange – Kiowa 345 kV circuit #1
- Kiowa – North Loving – China Draw 345/115 kV Projects
    - Kiowa – North Loving – China Draw circuit #1 and associated terminal equipment upgrades
    - China Draw 345/115/13 kV transformer circuit #1
    - North Loving 345/115/13 kV transformer circuit #1
- Kiowa – Road Runner 345/230/115 kV Projects
    - Kiowa 345/230 kV transformer circuit #1
    - Road Runner 345/115/13 kV transformer circuit #1
- Livingston Ridge – Sage Brush – Lagarto – Cardinal 115 kV circuit #1
- North Loving – South Loving 115 kV circuit #1
- Ponderosa – Ponderosa Tap 115 kV circuit #1
- Potash 230/115/13kV Transformer circuit #1 replacement

Contingent Upgrades

The following facilities do not yet have approval. These facilities have been assigned to higher queued interconnection customers. These facilities have been included in the models for the DISIS-2015-001 study and are assumed to be in service. This list may not be all inclusive. The DISIS-2015-001 Interconnection Customers, at this time, do not have responsibility for these facilities but may later be assigned the cost of these facilities if higher queued customers terminate their Generation Interconnection Agreement or withdraw from the interconnection queue. The DISIS-2015-001 Interconnection Customer Generation Facilities in-service dates may need to be delayed until the completion of the following upgrades.

- Upgrades assigned to DISIS-2010-002 Interconnection Customers:
    - Twin Church – Dixon County 230 kV circuit #1 rerate (320 MVA)
    - Buckner – Spearville 345 kV terminal equipment
- Upgrades assigned to DISIS-2011-001 Interconnection Customers:
    - Hoskins – Dixon County – Twin Church 230 kV circuit #1 conductor clearance increase
    - (NRIS only) Woodward – FPL Switch – Mooreland 138 kV circuit #1 rebuild
- Upgrades assigned to DISIS-2011-002 Interconnection Customers:
    - None at this time
- Upgrades assigned to DISIS-2012-001 Interconnection Customers:
    - None at this time
- Upgrades assigned to DISIS-2012-002 Interconnection Customers:
    - Associated Electric Cooperatives Inc. (AECI) Fairfax 138/69 kV transformer replacement
    - Lake Creek – Lone Wolf 69 kV circuit #1 reset CT
    - Remington – Fairfax 138 kV circuit #1 conductor clearance increase
    - (NRIS only) Arkansas City – Paris –Creswell – Oak – Rainbow – City of Winfield 69kV circuit #1 rebuild

    - (NRIS only) Creswell 138/69/13kV Transformer circuit #1 and #2, replacements
- Upgrades assigned to DISIS-2013-001 Interconnection Customers:
    - None at this time
- Upgrades assigned to DISIS-2013-002 Interconnection Customers:
    - Battle Creek – County Line – Neligh East 115kV circuit #1 rebuild
- Upgrades assigned to DISIS-2014-001 Interconnection Customers:
    - None at this time
- Upgrades assigned to DISIS-2014-002 Interconnection Customers:
    - Arnold – Ransom 115kV circuit #1, terminal equipment replacement
    - Beaver County 345kV Reactive Power Support, build approximately 75Mvars of capacitive reactive power support
    - Carlisle 230/115/13kV Transformer circuit #1 replacement
    - Harper Milan Tap – Clearwater 138kV rebuild
    - Knoll – Post Rock 230kV circuit #1 rebuild
    - Norton – Pleasant Hill 230kV circuit #1 rebuild for voltage conversion
    - Oklaunion 345kV Reactive Power Support, build approximately 110Mvars of Capacitor Bank(s) and +/- 50Mvar Static Var Compensator (SVC)
    - Tolk – Plant X 230kV circuit #3 build
    - TUCO 2 Substation 345/230kV
        - Build new 345/230kV substation along TUCO – Border 345kV and TUCO – Swisher 230kV. Tie in and Terminate TUCO 345kV, Border 345kV, TUCO 230kV, and Swisher 230kV at TUCO 2.
        - Build 345/230/13kV transformer
    - TUCO 2 – TUCO Interchange 230kV circuit #1 replace terminal equipment

Potential Upgrades Not in the Base Case

Any potential upgrades that do not have a Notification to Construct (NTC) and are not explicitly listed within this report have not been included in the base case. These upgrades include any identified in the SPP Extra-High Voltage (EHV) overlay plan, or any other SPP planning study other than the upgrades listed above in the previous section.

Regional Groupings

The interconnection requests listed in Appendix A are grouped together into eleven (11) active regional groups based on geographical and electrical impacts. These groupings are shown in Appendix C.

To determine interconnection impacts, eleven (11) different generation dispatch scenarios of the spring, summer, and winter base case models are developed to accommodate the regional groupings.

Power Flow

For Variable Energy Resources (VER) (solar/wind) in each power flow case, Energy Resource Interconnection Service (ERIS), is evaluated for the generating plants within a geographical area of the interconnection request(s) for the VERs dispatched at 100% nameplate of maximum generation. The VERs in the remote areas are dispatched at 20% nameplate of maximum generation. These projects are dispatched across the SPP footprint using load factor ratios.

Peaking units are not dispatched in the 2015 spring, or in the "High VER" summer and winter peaks. To study peaking units' impacts, the 2015 summer and winter peaks, 2020 summer and winter peaks, and 2025 summer peak models are developed with peaking units dispatched at 100% of the nameplate rating and VERs dispatched at 20% of the nameplate rating. Each interconnection request is also modeled separately at 100% nameplate for certain analyses.

All generators (VER and peaking) that requested Network Resource Interconnection Service (NRIS) are dispatched in an additional analysis into the interconnecting Transmission Owner's (T.O.) area at 100% nameplate with Energy Resource Interconnection Service (ERIS) only requests at 80% nameplate. This method allows for identification of network constraints that are common between regional groupings to have affecting requests share the mitigating upgrade costs throughout the cluster.

Dynamic Stability

For each group, all interconnection requests are dispatched at 100% nameplate output while the other groups are dispatched at 20% output for VERs and 100% output for thermal requests.

Short Circuit

The dynamic stability models (2025 SP) are used for this analysis.

Identification of Network Constraints

Network constraints are found by using PSS/E AC Contingency Calculation (ACCC) analysis with PSS/E MUST First Contingency Incremental Transfer Capability (FCITC) analysis on the entire cluster grouping dispatched at the various levels previously mentioned. The ERIS constraints are then screened to determine which of the generation interconnection requests have at least a 20% Distribution Factor (DF) upon outage based constraints (n-1) and 3% DF upon system intact constraints (n-0) or on non-convergences case solutions during outage based constraints (n-1). In addition, stability issues are also considered for transmission reinforcement under ERIS. Interconnection Requests that requested Network Resource Interconnection Service (NRIS) are also studied in the NRIS analysis to determine if any constraint measured greater than or equal to a 3% DF. If so, these constraints are also considered for mitigation under NRIS.

Constraints that are identified and require transmission reinforcement are listed in Appendix G. These constraints met the criteria for analysis for Energy Resource Interconnection Service and Network Resource Interconnection Service (if requested).

Other network constraints not requiring transmission reinforcements are shown in Appendix H. With a defined source and sink in a Transmission Service Request, this list of network constraints can be refined and expanded to account for all Network Upgrade requirements for firm transmission service. Additional constraints identified by multi-element contingencies are listed in Appendix I.

In no way does the list of constraints in Appendix G identify all potential constraints that guarantee operation for all periods of time. It should be noted that although this study analyzed many of the

most probable contingencies, it is not an all-inclusive list and cannot account for every operational situation. Because of this, it is likely that the Customer(s) may be required to reduce their generation output to 0 MW, also known as curtailment, under certain system conditions to allow system operators to maintain the reliability of the transmission network.

Determination of Cost Allocated Network Upgrades

Cost Allocated Network Upgrades of Variable Energy Resources (VER) (solar/wind) generation interconnection requests are determined using the 2015 spring model. Cost Allocated Network Upgrades of peaking units is determined using the 2020 summer peak model. A PSS/E and MUST sensitivity analysis is performed to determine the Distribution Factors (DF), a distribution factor with no contingency that each generation interconnection request has on each new upgrade. The impact each generation interconnection request has on each upgrade project is weighted by the size of each request. Finally the costs due by each request for a particular project are then determined by allocating the portion of each request's impact over the impact of all affecting requests.

For example, assume that there are three Generation Interconnection requests, X, Y, and Z that are responsible for the costs of Upgrade Project '1'. Given that their respective PTDF for the project have been determined, the cost allocation for Generation Interconnection request 'X' for Upgrade Project 1 is found by the following set of steps and formulas:

- Determine an Impact Factor on a given project for all responsible GI requests:

$$\text{Request X Impact Factor on Upgrade Project 1} = \text{PTDF(\%)(X)} * \text{MW(X)} = \text{X1}$$

$$\text{Request Y Impact Factor on Upgrade Project 1} = \text{PTDF(\%)(Y)} * \text{MW(Y)} = \text{Y1}$$

$$\text{Request Z Impact Factor on Upgrade Project 1} = \text{PTDF(\%)(Z)} * \text{MW(Z)} = \text{Z1}$$

- Determine each request's Allocation of Cost for that particular project:

$$\text{Request X's Project 1 Cost Allocation (\$)} = \frac{\text{Network Upgrade Project 1 Cost(\$)} * \text{X1}}{\text{X1} + \text{Y1} + \text{Z1}}$$

- Repeat previous for each responsible GI request for each Project

The cost allocation of each needed Network Upgrade is determined by the size of each request and its impact on the given project. This allows for the most efficient and reasonable mechanism for sharing the costs of upgrades.

Credits/Compensation for Amounts Advanced for Network Upgrades

Interconnection Customer shall be entitled to either credits or potentially Long Term Congestion Rights (LTCR), otherwise known as compensation, in accordance with Attachment Z2 of the SPP Tariff for any Network Upgrades, including any tax gross-up or any other tax-related payments associated with the Network Upgrades, and not refunded to the Interconnection Customer.

Required Interconnection Facilities

The requirement to interconnect the 5,460.29 MW of generation into the existing and proposed transmission systems in the affected areas of the SPP transmission footprint consist of the necessary cost allocated shared facilities listed in Appendix F by upgrade. The interconnection requirements for the cluster total an estimated $1,102,966,416 (exclusive of Gentleman Flowgate Upgrade Mitigation Costs). Interconnection Facilities specific to each generation interconnection request are listed in Appendix E. A preliminary one-line drawing for each generation interconnection request are listed in Appendix D.

For an explanation of how required Network Upgrades and Interconnection Facilities were determined, refer to the section on "Identification of Network Constraints."

Facilities Analysis

The interconnecting Transmission Owner for each Interconnection Request has provided its preliminary analysis of required Transmission Owner Interconnection Facilities and the associated Network Upgrades, shown in Appendix D. This analysis was limited only to the expected facilities to be constructed by the Transmission Owner at the Point of Interconnection. These costs are included within one-line diagrams in Appendix D and also listed in Appendix E and F as combined "Interconnection Costs". These costs will be further refined by the Transmission Owner as part of the Interconnection Facilities Study. Any additional Network Upgrades identified by this DISIS beyond the Point of Interconnection are defined and estimated by either the Transmission Owner or by SPP. These additional Network Upgrade costs will also be refined further by the Transmission Owner within the Interconnection Facilities Study.

Power Flow Analysis

Power Flow Analysis Methodology

The ACCC function of PSS/E is used to simulate single element and special (i.e., breaker-to-breaker, multi-element, etc.) contingencies in portions or all of the modeled control areas of SPP, as well as, other control areas external to SPP and the resulting scenarios analyzed. Single element and multi-element contingencies are evaluated.

Power Flow Analysis

A power flow analysis is conducted for each Interconnection Customer's facility using modified versions of the 2015 spring, 2015 summer and winter peaks, the 2020 summer and winter peaks, and the 2025 summer peak models. The output of the Interconnection Customer's facility is offset in each model by a reduction in output of existing online SPP generation. This method allows the request to be studied as an Energy Resource Interconnection Service request (ERIS). Certain requests that are also pursuing Network Resource Interconnection Service (NRIS) have an additional analysis conducted for displacing resources in the interconnecting Transmission Owner's balancing area.

Power Flow Results

Cluster Group 1 (Woodward Area)

In addition to the 4,216.5 MW of previously queued generation in the area, 161.0 MW of new interconnection service was studied. The system intact thermal violation of FPL Switch – Mooreland 138kV will limit the Interconnection Service for the DISIS-2015-001 Interconnection Request. The FPL Switch – Mooreland 138kV rebuild upgrade is currently assigned to DISIS-2011-001 Interconnection Requests and will need to be advanced by the DISIS-2015-001 Group 1 Interconnection Customer if the Interconnection Request anticipates having full Interconnection Service with their current proposed in-service date.

Cluster ERIS Constraints			
MONITORED ELEMENT	Limiting Rate A/B (MVA)	TC%LOADING (% MVA)	CONTINGENCY
FPL Switch – Mooreland 138KV CKT 1	287	114.06	System intact

Cluster NRIS Constraints			
MONITORED ELEMENT	Limiting Rate A/B (MVA)	TC%LOADING (% MVA)	CONTINGENCY
No NRIS Interconnection Requests in Group 1			

Group 1 (Stand Alone)

The Interconnection Request was also studied as a Stand Alone Interconnection Request in addition to the Cluster Analysis. The FPL Switch - Mooreland 138kV transmission line is a constraint during system intact conditions for GEN-2015-029. An analysis for Limited operation indicates that Limited Operation for Group 1 Interconnection Requests will be limited to 0 MW prior to the in-service date

of the upgrade(s) to alleviate this constraint. The FPL Switch – Mooreland 138kV rebuild upgrade is currently assigned to DISIS-2011-001 Interconnection Requests and will need to be advanced by the DISIS-2015-001 Group 1 Interconnection Customer if the Interconnection Request anticipates having full Interconnection Service with their current proposed in-service date.

Group 1 (Limited Operation)

Limited Operation results are listed below. While these results are based on the criteria listed in GIP 8.4.3, the Interconnection Customer may request additional scenarios for Limited Operation based on higher queued Interconnection Requests not being placed in service.

Limited Operation Analysis		
Interconnection Request	**MW**	**Constraint that most limits LOIS**
GEN-2015-029	0	FPL SWITCH - MOORELAND 138KV CKT 1

Cluster Group 2 (Hitchland Area)

In addition to the 3,112.7 MW of previously queued generation in the area, 550.0 MW of new interconnection service was studied. Due to the addition of new ERIS Interconnection Request(s) along the Potter County – Hitchland – Woodward corridor, potential voltage collapse(s) were observed for outages as show in the table below. To mitigate potential voltage collapse(s), a new 345kV line from Beaver County – New Station (Grapevine) – Chisholm, the rerouting and re-termination of the Border – Woodward 345kV line into the Chisholm 345kV substation, a new Chisholm – Gracemont 345kV line, and the approved Woodward – Tatonga – Mathewson – Cimarron 345kV circuit #2 are needed. In addition to the potential voltage collapse(s), mitigations for thermal constraints of the Potter County 345/230/13kV transformer and the Woodward – FPL Switch – Mooreland 138kV are needed. A second Potter 345/230/13kV transformer and a rebuild of Woodward – FPL Switch – Mooreland 138kV will alleviate the observed constraints. The FPL Switch – Mooreland 138kV rebuild upgrade is currently assigned to DISIS-2011-001 Interconnection Requests and will need to be advanced by the DISIS-2015-001 Group 1 Interconnection Customer if the Interconnection Request anticipates having full Interconnection Service with their current proposed in-service date.

The Woodward – Tatonga – Mathewson – Cimarron 345kV transmission circuit #2 has been previously cost allocated as a regional upgrade per SPP-NTC-200223 from the 2012 SPP Integrated Transmission Plan 10-Year (2012 ITP 10) with a current anticipated in-service date of June, 2021. The in-service date for this project is well beyond the in-service date of the Interconnection Request(s) in Group 2. In accordance with the SPP Generator Interconnection Procedure (GIP), Interconnection Request(s) can delay their in-service dates no more than three (3) years, therefore Group 2 requests will not be able to move forward into the Interconnection Facilities Study Queued unless they execute a Limited Operation Interconnection Facilities Study Agreement (Appendix 4A to the SPP GIP).

It should be noted that higher queued assigned network upgrades are considered in this analysis based on higher queued Interconnection Request(s) assignment. If higher queued Interconnection Request(s) withdraw from the SPP GI queue or terminate their Generator Interconnection Agreement (GIA), a restudy will be needed for this group to determine network upgrade need changes.

For Group 2 Cluster Cost Allocation please refer to Appendix E and F.

Cluster ERIS Constraints			
MONITORED ELEMENT	Limiting Rate A/B (MVA)	TC%LOADING (% MVA)	CONTINGENCY
Non-Converged Contingency	N/A	N/A	Buckner – Spearville 345kV CKT 1
Non-Converged Contingency	N/A	N/A	Elk City – Sweetwater 230kV CKT 1
Non-Converged Contingency	N/A	N/A	Elk City 230/138/13kV Transformer CKT 1
Non-Converged Contingency	N/A	N/A	Finney – Hitchland Interchange 345kV CKT 1
Non-Converged Contingency	N/A	N/A	Finney – Holcomb 345kV CKT 1
Non-Converged Contingency	N/A	N/A	Finney – Walkemeyer 345kV CKT 1
Non-Converged Contingency	N/A	N/A	GEN-2011-051 Tap – Tatonga 345kV CKT 1
Non-Converged Contingency	N/A	N/A	GEN-2011-051 Tap – Woodward 345kV CKT 1
Non-Converged Contingency	N/A	N/A	GEN-2011-014 Tap – Wooward 345kV CKT 1
Non-Converged Contingency	N/A	N/A	GEN-2014-038 Tap – Hitchland Interchange 345kV CKT 1
Non-Converged Contingency	N/A	N/A	GEN-2014-074 Tap – Oklunion 345kV CKT 1
Non-Converged Contingency	N/A	N/A	GEN-2014-074 Tap – TUCO Interchange 345kV CKT 1
Non-Converged Contingency	N/A	N/A	Grapevine Interchange – Stateline Interchange 230kV CKT 1
Non-Converged Contingency	N/A	N/A	Hitchland Interchange – Walkemeyer 345kV CKT 1
Non-Converged Contingency	N/A	N/A	Northwest – Tatonga 345kV CKT 1
Non-Converged Contingency	N/A	N/A	Potter County Interchange 345/230/13kV CKT 1
Non-Converged Contingency	N/A	N/A	Thistle – Woodward 345kV CKT 1
Non-Converged Contingency	N/A	N/A	SPP-SWPS-05
FPL Switch – Mooreland 138kV CKT 1	287	123	System Intact
FPL Switch – Woodward 138kV CKT 1	287	117	System Intact
Potter County Interchange 345/230/13kV CKT 1	560	112.69	Hitchland Interchange – Walkemeyer 345kV CKT 1
Woodward – Woodward 138kV CKT 1	287	100	System Intact

Cluster NRIS Constraints			
MONITORED ELEMENT	Limiting Rate A/B (MVA)	TC%LOADING (% MVA)	CONTINGENCY
Currently, No NRIS constraints for Group 2 Interconnection Requests			

Group 2 (Stand Alone)

The Interconnection Requests were studied as a Stand Alone Interconnection Request in addition to the Cluster Analysis. GEN-2014-037, GEN-2014-038, and GEN-2015-006 Stand Alone analysis observed potential voltage collapse(s) for the single element (N-1) outages along the Hitchland Interchange – Finney – Holcomb 345kV transmission circuit and thermal constraints on Woodward – FPL Switch – Mooreland 138kV transmission circuit. Additionally, GEN-2014-038 Stand Alone analysis results show thermal overloads for the Potter County 345/230/13kV transformer. Analysis for limited operation indicates that GEN-2014-037, GEN-2014-038, and GEN-2015-006 Interconnection Requests will individually be limited to 0 MW prior to the in-service date of the upgrade(s) due to these constraints. For Stand Alone Cost Allocation please refer to Appendix E1.

Group 2 (Limited Operation)

Limited Operation results are listed below. While these results are based on the criteria listed in GIP 8.4.3, the Interconnection Customer may request additional scenarios for Limited Operation based on higher queued Interconnection Requests not being placed in service.

Limited Operation Analysis		
Interconnection Request	**MW**	**Constraint that most limits LOIS**
GEN-2014-037	0	Finney – Hitchland Interchange 345kV CKT 1 Finney – Holcomb 345kV CKT 1 Hitchland Interchange – Walkemeyer 345kV CKT 1 SPP-SWPS-05 FPL Switch – Mooreland 138kV CKT 1 FPL Switch – Woodward 138kV CKT 1
GEN-2014-038	0	Finney – Hitchland Interchange 345kV CKT 1 Finney – Holcomb 345kV CKT 1 Hitchland Interchange – Walkemeyer 345kV CKT 1 SPP-SWPS-05 Potter County 345/230/13kV Transformer FPL Switch – Mooreland 138kV CKT 1 FPL Switch – Woodward 138kV CKT 1
GEN-2015-006	0	Finney – Hitchland Interchange 345kV CKT 1 Finney – Holcomb 345kV CKT 1 Hitchland Interchange – Walkemeyer 345kV CKT 1 SPP-SWPS-05 FPL Switch – Mooreland 138kV CKT 1 FPL Switch – Woodward 138kV CKT 1

Cluster Group 3 (Spearville Area)

In addition to the 3,909.3 MW of previously queued generation in the area, 39.4 MW of new interconnection service was studied. The addition of the Group 3 Interconnection Requests caused thermal ERIS constraints on Buckner – Holcomb 345kV circuit #1, Crooked Creek – Cudahy – Kismet 115kV circuit #1, FPL Switch – Mooreland 138kV circuit #1, and Greenburg – Shooting Star Tap 115kV circuit #1 during system intact and contingency system conditions. Mitigation for Buckner – Holcomb 345kV circuit #1 will require terminal equipment upgrades to achieve a higher emergency rating. Crooked Creek – Cudahy – Kismet 115kV and Greenburg – Shooting Start Tap 115kV will have to be rebuilt to mitigate the corresponding thermal overloads. The FPL Switch – Mooreland 138kV rebuild upgrade is currently assigned to DISIS-2011-001 Interconnection Requests and will need to be advanced by the DISIS-2015-001 Group 3 Interconnection Customers if the Interconnection Request anticipates having full Interconnection Service with their current proposed in-service date.

Cluster ERIS Constraints			
MONITORED ELEMENT	**Limiting Rate A/B (MVA)**	**TC%LOADING (% MVA)**	**CONTINGENCY**
Buckner – Holcomb 345kV CKT 1	726.6	100.00	G13-010T 345.00 - POST ROCK 345KV CKT 1
Crooked Creek – Cudahy 115kV CKT 1	148.2	114.80	BUCKNER7 345.00 - HOLCOMB 345KV CKT 1
Cudahy – Kismet 115kV CKT 1	148.2	118.18	BUCKNER7 345.00 - HOLCOMB 345KV CKT 1
FPL Switch – Mooreland 138kV CKT 1	287	100.21	System intact
Greenburg – Shooting Star Tap 115kV CKT1	115.1	120.00	System intact

Cluster NRIS Constraints			
MONITORED ELEMENT	**Limiting Rate A/B (MVA)**	**TC%LOADING (% MVA)**	**CONTINGENCY**
Currently, No NRIS constraints for Group 3 Interconnection Requests	-	-	N/A

Group 3 (Stand Alone)

The Interconnection Requests were studied as a Stand Alone Interconnection Request in addition to the Cluster Analysis. GEN-2015-021 currently does not have any ERIS or NRIS mitigation constraints for Stand Alone Analysis. The Buckner – Holcomb 345kV transmission line is a constraint for GEN-2015-026 Interconnection Request. An analysis for limited operation indicates that Limited Operation for GEN-2015-026 Interconnection Request will be limited to 0MW prior to the in-service date of the upgrade(s) to alleviate this constraint. The Crooked Creek – Cudahy – Kismet – Cimarron River Tap 115kV and Greenburg – Shooting Star Tap 115kV transmission lines are a constraint for GEN-2015-027 Interconnection Request. An analysis for limited operation indicates that Limited Operation for GEN-2015-027 Interconnection Request will be limited to 0MW prior to the in-service date of the upgrade(s) to alleviate these constraints. For Stand Alone Cost Allocation please refer to Appendix E1.

Group 3 (Limited Operation)

Limited Operation results are listed below. While these results are based on the criteria listed in GIP 8.4.3, the Interconnection Customer may request additional scenarios for Limited Operation based on higher queued Interconnection Requests not being placed in service.

Limited Operation Analysis		
Interconnection Request	**MW**	**Constraint that most limits LOIS**
GEN-2015-021	20	None
GEN-2015-026	0	Buckner – Holcomb 345kV CKT 1
GEN-2015-027	0	Cimarron River Tap – Kismet 115kV CKT 1 Crooked Creek – Cudahy 115kV CKT 1 Cudahy – Kismet 115kV CKT 1 Greenburg – Shooting Star Tap 115kV CKT 1

Cluster Group 4 (Northwest Kansas Area)

In addition to the 1,464.97.6 MW of previously queued generation in the area, 242.0 MW of new interconnection service was studied. The second Mingo 345/115kV transformer network upgrade assigned in the 2015 SPP Integrated Transmission Plan 10-Year Assessment Study (ITP10), per SPP-NTC-200325, will mitigate the ERIS thermal constraint for Beach Station – GEN-2010-048 Tap 115kV. The NRIS thermal overload observed for Arnold – Ransom 115kV can be mitigated by the second Mingo transformer and/or possibly the Arnold – Ransom 115kV terminal equipment upgrade assigned to DISIS-2014-002 Interconnection Customer(s). Arnold – Ransom 115kV terminal equipment upgrade is currently being studied by the Transmission Owner (T.O.) in the Interconnection Facilities Study (IFS) stage based on DISIS-2014-002 study upgrade requirement. If terminal equipment upgrade minimum design standards met the required MVA needed to alleviate this study's overload, then the Arnold – Ransom 115k terminal equipment upgrade could mitigate the constraint on Arnold – Ransom 115kV.

Cluster ERIS Constraints			
MONITORED ELEMENT	**Limiting Rate A/B (MVA)**	**TC%LOADING (% MVA)**	**CONTINGENCY**
Beach Station – GEN-2010-048 Tap 115kV CKT 1	88	107.15	Mingo 345/115/13.8KV Transformer CKT 1

Cluster NRIS Constraints

MONITORED ELEMENT	Limiting Rate A/B (MVA)	TC%LOADING (% MVA)	CONTINGENCY
Arnold – Ransom 115kV CKT 1	79.7	111.72	Mingo 345/115/13.8KV Transformer CKT 1

Group 4 (Stand Alone)

The Interconnection Requests were studied as a Stand Alone Interconnection Request in addition to the Cluster Analysis. The Beach Station – GEN-2010-048 Tap 115kV transmission line is a constraint for GEN-2010-048 Interconnection Request. Analysis indicates that Limited Operation for GEN-2010-048 Interconnection Request will be limited to 55MW prior to the in-service date of the upgrade(s) to alleviate this constraint. The Arnold – Ransom 115kV transmission line is an ERIS and NRIS constraint for GEN-2015-017 Interconnection Request. An analysis for limited operation indicates that Limited Operation for GEN-2015-017 Interconnection Request will be limited to 82MW prior to the in-service date of the upgrade(s) to alleviate this constraint. For Stand Alone Cost Allocation please refer to Appendix E1.

Group 4 (Limited Operation)

Limited Operation results are listed below. While these results are based on the criteria listed in GIP 8.4.3, the Interconnection Customer may request additional scenarios for Limited Operation based on higher queued Interconnection Requests not being placed in service.

Limited Operation Analysis		
Interconnection Request	MW	Constraint that most limits LOIS
GEN-2010-048	55	Beach Station – GEN-2010-048 Tap 115kV CKT 1
GEN-2015-017	82	Arnold – Ransom 115kV CKT 1

Cluster Group 5 (Amarillo Area)

In addition to the 973.5 MW of previously queued generation in the area, 203.0 MW of new interconnection service was studied. Currently, no ERIS constraints were identified in this study for Group 5 Interconnection Request(s). NRIS thermal constraints for the Bushland Interchange 230/115/13kV transformer, the Carlisle – Tuco Interchange 230kV line, and the Deaf Smith Interchange – Panda Energy Substation 115kV line were observed. To mitigate the NRIS thermal constraints, the Bushland Interchange 230/115/13kV transformer will need to be replaced, terminal equipment will need to be replaced on the Carlisle – TUCO Interchange 230kV line (assigned to SPP-2012-AGE-AFS-9 Transmission Customers), and the Deaf Smith County – Interchange – Panda Energy Substation 115kV line will need to be rebuilt (currently assigned as a regional upgrade per SPP-NTC-200326).

Cluster ERIS Constraints			
MONITORED ELEMENT	Limiting Rate A/B (MVA)	TC%LOADING (% MVA)	CONTINGENCY
Currently, No ERIS constraints for Group 5Interconnection5 Interconnection Requests	-	-	N/A

Cluster NRIS Constraints			
MONITORED ELEMENT	Limiting Rate A/B (MVA)	TC%LOADING (% MVA)	CONTINGENCY
Bushland 230/115/13kV transformer CKT 1	168	103.71	Bushland Interchange – Potter County 345kV CKT 1

Carlisle Interchange – TUCO Interchange 230kV CKT 1	351	104.64	Jones Station – TUCO Interchange 230kV CKT 1
Deaf Smith County Interchange – Panda Energy Substation CKT 1	106	102.44	Bushland Interchange – Deaf Smith 230kV CKT 1

Group 5 (Stand Alone)

The Interconnection Request(s) were studied as a Stand Alone Interconnection Request in addition to the Cluster Analysis. GEN-2014-068 currently does not have any ERIS mitigation constraints for Stand Alone Analysis. The Deaf Smith Interchange 230/115/13kV transformer circuit #1 overload is constraint for GEN-2014-068 NRIS analysis. An analysis for limited operation indicates that ERIS Limited Operation for GEN-2014-068 Interconnection Request will be limited to 195/203 MW (Summer Peak/Winter Peak). NRIS Limited Operation for GEN-2014-068 will be limited to 151 MW prior to the in-service date of the upgrade(s) to alleviate the NRIS constraint. For Stand Alone Cost Allocation please refer to Appendix E1.

Group 5 (Limited Operation)

Limited Operation results are listed below. While these results are based on the criteria listed in GIP 8.4.3, the Interconnection Customer may request additional scenarios for Limited Operation based on higher queued Interconnection Requests not being placed in service.

Limited Operation Analysis		
Interconnection Request	**MW**	**Constraint that most limits LOIS**
GEN-2014-068	196/203 (ERIS) 151 (NRIS)	Deaf Smith Interchange 230/115/13kV Transformer CKT 1

Cluster Group 6 (South Texas Panhandle/New Mexico Area)

In addition to the 4,173.97 MW of previously queued generation in the area, 1,401.06 MW of new interconnection service was studied. Due to the addition of the new Interconnection Request(s), various potential voltage collapse(s) were observed for the entire southern portions of the Texas panhandle for outages as shown in the table below including all area tie lines. To mitigate potential voltage collapse(s), a new 345kV line from TUCO 2 – Border – Chisholm 345kV, a new 345kV line from Tolk – Pleasant Hill – Potter County – New Station (Grapevine) – Chisholm 345kV circuit #1, capacitive reactive power at Border and Oklaunion, rerouting and re-termination of the 345kV line from Border – Woodward into the Chisholm 345kV station, the 345kV line from Chisholm – Gracemont , the 345kV line from Hobbs – Yoakum – TUCO Interchange, and rerouting and re-termination of the 345kV line from Hobbs – Yoakum 345/230kV Project from TUCO 345kV to TUCO 2 345kV are needed to mitigate the voltage collapse(s). In addition to the potential voltage collapse(s), mitigations for ERIS thermal constraints on the Chisholm – Elk City 230kV line, the Elk City 230/138/13kV transformer, the Lawton East Side (LES) – GEN-2014-057 Tap – Sunnyside 345kV line, the Kress Interchange – Swisher 115kV line, the Potter County 345/230kV transformer, and the Ochoa – Ponderosa Tap – Whitten 115kV line are needed. The Chisholm – Elk City 230kV line overload will require a rebuild, the LES – GEN-2014-057 Tap – Sunnyside 345kV line and Kress Interchange – Swisher 115kV line will both require terminal upgrade(s). The Elk City 230/138kV transformer will require significant terminal and substation work to alleviate the overload. The Ochoa – Ponderosa Tap – Whitten 115kV overload will require a rebuild with the Ochoa – Ponderosa Tap transmission segment being the cost responsibility of the study group Interconnection Request(s). The Ponderosa Tap – Whitten 115kV line rebuild is a previously cost

allocated network upgrade per SPP-NTC-200324 from the 2015 SPP Integrated Transmission Planning – Near Term Assessment (2015 ITPNT) study. ERIS service type Network Upgrade(s) identified in this impact cluster analysis could have potentially alleviated NRIS service type violations. If any Interconnection Request(s) withdraw from the DISIS-2015-001 study in this particular regional area, the need for ERIS and/or NRIS service type Network Upgrade(s) will have to be reevaluated in a restudy.

NRIS constraints that require mitigation include the need for Chaves County – Price – Pine – Capitan 69kV to 115kV voltage conversion, terminal equipment upgrades for Carlsbad – Pecos, Cunningham – Maddox, and TUCO – Carlisle 230kV circuit #1.

The Hobbs – Yoakum – TUCO 345/230kV Project has been previously cost allocated for this study per SPP-NTC-200223 and 200309 from the 2012 SPP Integrated Transmission Plan 10-Year (2012 ITP 10) High Priority Incremental Loads (HPILs) Study with a current anticipated in-service date of June, 2020. The in-service date for this project is well beyond the in-service date of the Interconnection Request(s) in Group 6. In accordance with the SPP Generator Interconnection Procedure (GIP), Interconnection Request(s) can delay their in-service dates no more than three (3) years, therefore Group 6 requests will not be able to move forward into the Interconnection Facilities Study Queued unless they execute a Limited Operation Interconnection Facilities Study Agreement (Appendix 4A to the SPP GIP).

It should be noted that higher queued assigned network upgrades are considered in this analysis based on higher queued Interconnection Request(s) assignment. If higher queued Interconnection Request(s) withdraw from the SPP GI queue or terminate their Generator Interconnection Agreement (GIA), a restudy will be needed for this group to determine network upgrade need changes.

For Group 6 Cluster analysis cost allocation, please refer to Appendix E and F.

Cluster ERIS Constraints			
MONITORED ELEMENT	**Limiting Rate A/B (MVA)**	**TC%LOADING (% MVA)**	**CONTINGENCY**
Non-Converged Contingency	N/A	N/A	Amarillo South Interchange – Swisher County Interchange 230kV CKT 1
Non-Converged Contingency	N/A	N/A	Amoco Switching Station – Sundown Interchange 230kV CKT 1
Non-Converged Contingency	N/A	N/A	Amoco Switching Station – Yoakum County Interchange 230kV CKT 1
Non-Converged Contingency	N/A	N/A	Bailey County Interchange – GEN-2015-018 Tap 115kV CKT 1
Non-Converged Contingency	N/A	N/A	Border – Chisholm 345kV CKT 1
Non-Converged Contingency	N/A	N/A	Border – TUCO 2 345kV CKT 1
Non-Converged Contingency	N/A	N/A	Border – Woodward 345kV CKT 1
Non-Converged Contingency	N/A	N/A	Buckner – Spearville 345kV CKT 1
Non-Converged Contingency	N/A	N/A	Bushland Interchange – Deaf Smith County Interchange 230kV CKT 1
Non-Converged Contingency	N/A	N/A	Bushland Interchange – Potter County Interchange 230kV CKT 1
Non-Converged Contingency	N/A	N/A	Bushland Interchange Switched Shunt
Non-Converged Contingency	N/A	N/A	Cargill Sub – Deaf Smith Rec #24 115kV CKT 1
Non-Converged Contingency	N/A	N/A	Carlisle Interchange – TUCO Interchange 230kV CKT 1

Non-Converged Contingency	N/A	N/A	Chaves County Interchange – San Juan Mesa Tap 230kV CKT 1
Non-Converged Contingency	N/A	N/A	Chisholm – Elk City 230kV CKT 1
Non-Converged Contingency	N/A	N/A	Chisholm – Sweetwater 230kV CKT 1
Non-Converged Contingency	N/A	N/A	Chisholm – Gracemont 345kV CKT 1
Non-Converged Contingency	N/A	N/A	Chisholm – Woodward 345kV CKT 1
Non-Converged Contingency	N/A	N/A	Crossroads – Tolk Station 345kV CKT 1
Non-Converged Contingency	N/A	N/A	Curry County Interchange – Deaft Smith Rec #20 115kV CKT 1
Non-Converged Contingency	N/A	N/A	Deaf Smith County – GEN-2014-068 Tap 230kV CKT 1
Non-Converged Contingency	N/A	N/A	Deaf Smith Rec #20 – Parmer County Sub 115kV CKT 1
Non-Converged Contingency	N/A	N/A	Elk City 230/138/13kV Transformer CKT 1
Non-Converged Contingency	N/A	N/A	Finney Switching Station – Hitchland Interchange 345kV CKT 1
Non-Converged Contingency	N/A	N/A	Finney Switching Station – Holcomb 345kV CKT 1
Non-Converged Contingency	N/A	N/A	GEN-2011-051 Tap – Tatonga 345kV CKT 1
Non-Converged Contingency	N/A	N/A	GEN-2011-051 Tap – Woodward 345kV CKT 1
Non-Converged Contingency	N/A	N/A	GEN-2011-014 Tap – Woodward 345kV CKT 1
Non-Converged Contingency	N/A	N/A	GEN-2013-027 Tap – Tolk Station 230kV CKT 1
Non-Converged Contingency	N/A	N/A	GEN-2014-038 Tap – Hitchland Interchange 345kV CKT 1
Non-Converged Contingency	N/A	N/A	GEN-2014-038 Tap – Potter County Interchange 345kV CKT 1
Non-Converged Contingency	N/A	N/A	GEN-2014-068 Tap – Plant X Station 230kV CKT 1
Non-Converged Contingency	N/A	N/A	GEN-2014-074 Tap – Oklaunion 345kV CKT 1
Non-Converged Contingency	N/A	N/A	GEN-2014-074 Tap – TUCO Interchange 345kV CKT 1
Non-Converged Contingency	N/A	N/A	Gracemont – Minco 345kV CKT 1
Non-Converged Contingency	N/A	N/A	Grapevine Interchange – Stateline Interchange 230kV CKT 1
Non-Converged Contingency	N/A	N/A	Hitchland Interchange – Moore County Interchange 230kV CKT 1
Non-Converged Contingency	N/A	N/A	Jones Station – TUCO Interchange 230kV CKT 1
Non-Converged Contingency	N/A	N/A	Lubbock South – Wolfforth Interchange 230kV CKT 1
Non-Converged Contingency	N/A	N/A	Moore County Interchange – Potter County Interchange 230kV CKT 1
Non-Converged Contingency	N/A	N/A	New Hart – Plant X Station 230kV CKT 1
Non-Converged Contingency	N/A	N/A	New Hart – Potter County Interchange 230kV CKT 1
Non-Converged Contingency	N/A	N/A	Northwest – Tatonga 345kV CKT 1
Non-Converged Contingency	N/A	N/A	OKlaunion Switched Shunt
Non-Converged Contingency	N/A	N/A	Potter County Interchnage 345/230/13kV CKT 1
Non-Converged Contingency	N/A	N/A	TUCO Interchage – TUCO 2 345kV CKT 1
Non-Converged Contingency	N/A	N/A	TUCO Interchange 345/230/13 transformer CKT 1 or CKT 2
Non-Converged Contingency	N/A	N/A	TUCO 2 345/230/13kV transformer CKT 1
Non-Converged Contingency	N/A	N/A	Wolfforth Interchange – Yuma Interchange 115kV CKT 1
Chisholm – Elk City 230kV CKT 1	353	101	System Intact
Elk City 230/138/13kV Transformer CKT 1	287	129.9	System Intact
GEN-2014-057 Tap – Sunnyside 345kV CKT 1	789	103.7	Cimarron – Minco 345kV CKT 1
Kress Interchange – Swisher County Interchange 115kV CKT 1	175	101	Kress Interchange – New Hart 115kV CKT 1
Ochoa Sub – Ponderosa Tap 115kV CKT 1	141	139	Hobbs – Kiowa 345kV CKT 1
Ponderosa Tap – Whitten 115kV CKT 1	141	160.4	Hobbs – Kiowa 345kV CKT 1
Potter County Interchange 345/230/13kV CKT 1	560	111.21	Pleasant Hill – Potter County 345kV CKT 1
TUCO Interchange – TUCO 2 230kV CKT 1	502	148.73	TUCO Interchange – TUCO 2 345kV CKT 1
TUCO Interchange 345/230/13kV transformer CKT 1	560	127.74	TUCO Interchange – TUCO 2 345kV CKT 1

Cluster NRIS Constraints			
MONITORED ELEMENT	Limiting Rate A/B (MVA)	TC%LOADING (% MVA)	CONTINGENCY
Currently, No NRIS constraints for Group 2 Interconnection RequestsCarlisle Interchange – TUCO Interchange 230kV CKT 1	351	103.47	Jones Station – TUCO Interchange 230kV CKT 1
Carlsbad Interchange – Pecos Interchange CKT 1	151	123.55	Hobbs – Kiowa 345kV CKT 1
Chaves County Interchange – Samson 115kV CKT 1	154	105.25	Chaves County Interchange – Urton 115kV CKT 1
Chaves County Interchange – Urton 115kV CKT 1	160	102.33	Chaves County Interchange – Samson 115kV CKT 1
Cunningham – Maddox Station 115kV CKT 1	160	114.95	Hoobs Interchange – Maddos Station 115kV CKT 1
Kress Interchange – Swisher County Interchange 115kV CKT 1	159	110.08	System Intact

Group 6 (Stand Alone)

The Interconnection Requests were studied as a Stand Alone Interconnection Request in addition to the Cluster Analysis. DISIS-2015-001 Group 6 Interconnection Request(s) are greatly reliant DISIS-2014-002 Network Upgrades. As a result, DISIS-2015-001 Group 6 Interconnection Request(s) will individually be limited to 0 MW prior to the in-service date of the network upgrade(s). Additional constraints were identified and listed in the Limited Operation Analysis below. For Stand Alone Cost Allocation please refer to Appendix E1.

Group 6 (Limited Operation)

Limited Operation results are listed below. While these results are based on the criteria listed in GIP 8.4.3, the Interconnection Customer may request additional scenarios for Limited Operation based on higher queued Interconnection Requests not being placed in service.

Limited Operation Analysis		
Interconnection Request	MW	Constraint that most limits LOIS
ASGI-2015-002	0	Tolk – Plant X 230kV CKT 1 & 2 TUCO 345/230/13kV CKT 1 & 2 Woodward – Border 345kV CKT 1
ASGI-2015-003	0	Norton – Pleasant Hill 230kV conversion Tolk – Plant X 230kV CKT 1 & 2 TUCO 345/230/13kV CKT 1 & 2 Woodward – Border 345kV CKT 1
GEN-2014-046	0	Tolk – Plant X 230kV CKT 1 & 2 TUCO 345/230/13kV CKT 1 & 2 Woodward – Border 345kV CKT 1 NRIS Only : Potash 230/115kV transformer CKT 1 NRIS Only: Urton - Chaves County – Samson
GEN-2014-065	0	Tolk – Plant X 230kV CKT 1 & 2 TUCO 345/230/13kV CKT 1 & 2 Woodward – Border 345kV CKT 1 Ochoa – Ponderosa Tap – Whitten 115kV CKT
GEN-2014-074	0	Tolk – Plant X 230kV CKT 1 & 2 TUCO 345/230/13kV CKT 1 & 2 Woodward – Border 345kV CKT 1 NRIS Only: TUCO 230/115/13kV transformer CKT 1
GEN-2015-009	0	Tolk – Plant X 230kV CKT 1 & 2 TUCO 345/230/13kV CKT 1 & 2 Woodward – Border 345kV CKT 1 Oklaunion – TUCO Interchange 345kV CKT 1 SPP-SWPS-01 NRIS Only: Cunningham – Maddox 115kV CKT 1 NRIS Only: Hobbs 230/115/13kV transformer CKT 1 NRIS Only: Cunningham – Potash Junction 115kV CKT 1

Limited Operation Analysis		
Interconnection Request	**MW**	**Constraint that most limits LOIS**
GEN-2015-010	0	Tolk – Plant X 230kV CKT 1 & 2 TUCO 345/230/13kV CKT 1 & 2 Woodward – Border 345kV CKT 1
GEN-2015-014	0	Tolk – Plant X 230kV CKT 1 & 2 TUCO 345/230/13kV CKT 1 & 2 Woodward – Border 345kV CKT 1
GEN-2015-018	0	Tolk – Plant X 230kV CKT 1 & 2 TUCO 345/230/13kV CKT 1 & 2 Woodward – Border 345kV CKT 1
GEN-2015-020	0	Tolk – Plant X 230kV CKT 1 & 2 TUCO 345/230/13kV CKT 1 & 2 Woodward – Border 345kV CKT 1 Curry Interchange – Deaf Smith #20 115kV CKT 1
GEN-2015-022	0	Tolk – Plant X 230kV CKT 1 & 2 TUCO 345/230/13kV CKT 1 & 2 Woodward – Border 345kV CKT 1 Kress Interchange – Swisher 115kV CKT 1

Cluster Group 7 (Southwestern Oklahoma Area)

In addition to the 1901.00 MW of previously queued generation in the area, 172.90 MW of new interconnection service was studied. NRIS constraints were observed for the Mooreland – FPL Switch – Woodward 138kV line, the Woodward – Woodward 138kV line, and the Woodward 138/69kV transformer. The Chisholm substation expansion to reroute and re-terminate Border – Woodward 345kV circuit #1 into Chisholm will mitigate these constraints.

Cluster ERIS Constraints			
MONITORED ELEMENT	**Limiting Rate A/B (MVA)**	**TC%LOADING (% MVA)**	**CONTINGENCY**
Currently, No ERIS constraints for Group 5 Interconnection Requests	-	-	N/A

Cluster NRIS Constraints			
MONITORED ELEMENT	**Limiting Rate A/B (MVA)**	**TC%LOADING (% MVA)**	**CONTINGENCY**
FPL Switch – Mooreland 138kV CKT 1	287	128.82	Northwest – Tatonga 345kV CKT 1
FPL Switch – Woodward 138kV CKT 1	287	123.28	Northwest – Tatonga 345kV CKT 1
Woodward – Woodward 138kV CKT 1	287	110.38	SPSCONT-05B
Woodward 138/69/13kV Transformer CKT 1	134	107.94	FPL Switch – Mooreland 138kV

Group 7 (Stand Alone)

The Interconnection Requests were studied as a Stand Alone Interconnection Request in addition to the cluster analysis. Currently, GEN-2015-004 does not have any ERIS constraints for transmission reinforcement upgrades for Stand Alone Analysis. GEN-2015-013 does not have any ERIS or NIRS constraints for transmission reinforcements upgrades for Stand Alone Analysis. For Stand Alone Cost Allocation please refer to Appendix E1.

Group 7 (Limited Operation)

Limited Operation results are listed below. While these results are based on the criteria listed in GIP 8.4.3, the Interconnection Customer may request additional scenarios for Limited Operation based on higher queued Interconnection Requests not being placed in service.

Limited Operation Analysis		
Interconnection Request	MW	Constraint that most limits LOIS
GEN-2015-004	52.9	None
GEN-2015-013	120	None

Cluster Group 8 (North Oklahoma/South Central Kansas Area)

In addition to the 4,188.20 MW of previously queued generation in the area, 1,454.1 MW of new interconnection service was studied. The analysis for ERIS observed thermal overloads on the Clearwater – Gill Energy Center West 138kV for system intact conditions and thermal overloads on the Benton – Wichita 345kV, Chikaskia – Kildare 138kV, and Viola 345/138/13kV transformer thermal constraints for single system contingencies (N-1) conditions. For mitigation of the system intact and N-1 constraints, Benton – Wichita 345kV terminal equipment upgrade, Viola 345/138/13 transformer circuit #2, and Viola 345/138kV Project assigned in the 2013 Integrated Transmission Plan Near Term Assessment (ITPNT), per SPP-NTC-200228 will be required. The analysis for NRIS indicates a need for the Viola 345/138 Project for mitigation for the overload on Clearwater – Gill Energy Center West 138kV.

Cluster ERIS Constraints			
MONITORED ELEMENT	Limiting Rate A/B (MVA)	TC%LOADING (% MVA)	CONTINGENCY
Benton – Wichita 345kV CKT 1	956	102.11	Wolf Creek Generating Station Unit #1
Chikaskia – Kildare 138kV CKT 1	143	106.45	Hunter – Woodring 345kV CKT 1
Clearwater – Gill Energy Center West 138kV CKT 1	143	108.21	System intact
Viola 345/138/13kV Transformer CKT 1	492.8	102.31	Viola – Wichita 345kV CKT 1

Cluster NRIS Constraints			
MONITORED ELEMENT	Limiting Rate A/B (MVA)	TC%LOADING (% MVA)	CONTINGENCY
Clearwater – Gill Energy Center West 138kV CKT 1	143	157.53	Gill Energy Center South – Viola 138kV CKT 1

Group 8 (Stand Alone)

The Interconnection Requests were studied as a Stand Alone Interconnection Request in addition to the cluster analysis. Currently, GEN-2015-001 does not have any ERIS or NRIS mitigation constraints for Stand Alone Analysis. The planned Viola 345/138/13kV transformer is a constraint for GEN-2015-003 Interconnection Request. An analysis for limited operation indicates that Limited Operation for GEN-2015-003 Interconnection Request will be limited to 195MW prior to the in-service date of the upgrade(s) to alleviate this constraint. After the in-service of the Viola 345/138kV Projects and if a delay exists in updating the Clearwater – Gill Energy Center West 138kV terminal equipment, there could potentially be an additional limited operation megawatt amount for GEN-2015-003. This particular scenario could limit GEN-2015-003 to 0 MW. Currently, GEN-2015-015 does not have ERIS mitigation constraints for Stand Alone Analysis. GEN-2015-015 will be limited to 0 MW for NRIS constraints on Clearwater – Gill Energy Center West 138kV before upgrade(s) to alleviate this overload are in-service. Currently, GEN-2015-016 does not have any ERIS or NRIS mitigation constraints for Stand Alone Analysis. Also Interconnection Requests GEN-2015-024, GEN-2015-025, GEN-2015-028, and GEN-2015-030 do not currently have any ERIS mitigation constraints for Stand Alone Analysis. For Stand Alone Cost Allocation please refer to Appendix E1.

Group 8 (Limited Operation)

Limited Operation results are listed below. While these results are based on the criteria listed in GIP 8.4.3, the Interconnection Customer may request additional scenarios for Limited Operation based on higher queued Interconnection Requests not being placed in service.

Limited Operation Analysis		
Interconnection Request	**MW**	**Constraint that most limits LOIS**
GEN-2015-001	200	None
GEN-2015-003	195	Viola – Wichita 345kV CKT 1
GEN-2015-015	154.6 0 (NRIS)	None Clearwater – Gill Energy Center West 138kV CKT 1
GEN-2015-016	200	None
GEN-2015-024	220	None
GEN-2015-025	220	None
GEN-2015-028	3	None
GEN-2015-030	200.1	None

Cluster Group 9 (Nebraska Area)

In addition to the 2,492.7 MW of previously queued generation in the area, 976.8 MW of new interconnection service was studied. ERIS analysis identitified various thermal violations for the addition of the DISIS-2015-001 Group 09 Interconnection Requests during system intact and contingency conditions.

ERIS constraint for Gentleman Generating Station ("GGS") Flowgate will require the Gentleman – Cherry County/Thedford – Holt County 345kV Project ("R-Plan") previously assigned in SPP 2012 Integrated Transmission Plan 10 Year Assessment (ITP10), per SPP-NTC-200220, and also further Nebraska Public Power District (NPPD) review for GGS flowgate thermal and stability mitigation network upgrade(s) during the Interconnection Facilities Study (IFS). An additional sensitivity was also evaluated that includes three (3) Interconnection Requests in the Western Area Power Administration (WAPA) impact study queue. These three (3) WAPA Interconnection Requests are close in electrical configuration distance to the SPP transmission system and show extensive impacts on the GGS flowgate constraint.

ERIS constraints along the Fort Randall – Meadow Grove – Kelly (Columbus) corridor will require Albion – Petersburg – North Petersburg 115kV circuit #1 re-conductor, a new Meadow Grove 230/115/13kV transformer, and Meadow Grove – North Petersburg 115kV transmission circuit.

ERIS constraints in the Neligh area will require Albion – Petersburg – North Petersburg 115kV circuit #1 re-conductor, Battle Creek – Norfolk 115kV circuit #1 rebuild, Bloomfield – Gavins Point 115kV circuit #1 rebuild and, the Hoskins – Neligh 345/115kV Project assigned in 2014 SPP Integrated Transmission Plan Near Term Assessment (ITPNT) per SPP-NTC-200253. If the DISIS-2015-001 Interconnection Customer assigned the rebuild of Bloomfield – Gavins Point 115kV circuit #1 proceeds to the IFS, further review from WAPA will be needed for WAPA facilities associated with the transmission circuit.

ERIS constraints along the Fort Thompson – WAPA GI-0717/18 Tap – GEN-2015-023 Tap – Grand Island 345kV transmission corridor will also require the R-Plan for voltage and thermal mitigation. For details related to the voltage issues, please refer to the stability section of this report.

Various NRIS constraints across similar ERIS constraint corridors are observed. NRIS constraints unique to the previously mentioned ERIS constraints include the thermal violation for Victory Hill 230/115/13kV during single element contingency conditions. Mitigation for the Victory Hill transformer would require the previously assigned 2014 SPP ITPNT Stegall – Scotts Bluff 115kV transmission circuit and Stegall 345/115/13kV transformer Project per SPP-NTC-200253.

Cluster ERIS Constraints			
MONITORED ELEMENT	Limiting Rate A/B (MVA)	TC%LOADING (% MVA)	CONTINGENCY
Albion – Genoa 115kV CKT 1	137	109.75	County Line – Neligh East 115kV CKT 1
Albion – Petersburg 115kV CKT 1	137	154.87	LN-1163-2
Battle Creek – County Line 115kV CKT 1	240	121.25	Bloomfield – Gavins Point 115kV CKT 1
Battle Creek – North Norfolk 115kV CKT 1	193	147.1	Bloomfield – Gavins Point 115kV CKT 1
Bloomfield – Gavins Point 115kV CKT 1	120	188.36	County Line – Neligh East 115kV CKT 1
Columbus – Genoa 115kV CKT 1	137	104.23	County Line – Neligh East 115kV CKT 1
County Line – Neligh East 115kV CKT 1	240	121.55	Bloomfield – Gavins Point 115kV CKT 1
Fort Randall – GEN-2014-023 Tap 230kV CKT 1	320	123.63	Kelly – Meadow Grove 230kV CKT 1
GEN-2014-059 Tap – Ogallala 230kV CKT 1	320	125.03	Keystone – Sidney 345kV CKT 1
Gentleman Generation Station Flowgate	1635	104.99	System intact
Grand Island – Holt County 345kV CKT 1	N/A	N/A	Non-Convergence Contingency
Grand Island – Holt County 345kV CKT 1	720	105.62	Fort Thompson – WAPA GI-0717/18 Tap 345kV CKT 1
Kelly – Meadow Grove 230kV CKT 1	368	110.64	Fort Randall – GEN-2014-023 Tap 230kV CKT 1
Norfolk – North Norfolk 115kV CKT 1	120	136.84	Hoskins – North Norfolk 115kV CKT 1
North Petersburg – Petersburg 115kV CKT 1	137	155.50	LN-1163-2

Cluster NRIS Constraints			
MONITORED ELEMENT	Limiting Rate A/B (MVA)	TC%LOADING (% MVA)	CONTINGENCY
Albion – Petersburg 115kV CKT 1	137	130.74	LN-1163-2
Battle Creek – County Line 115kV CKT 1	240	104.17	Bloomfield – Gavins Point 115kV CKT 1
Battle Creek – North Norfolk 115kV CKT 1	193	125.86	Bloomfield – Gavins Point 115kV CKT 1
Bloomfield – Gavins Point 115kV CKT 1	120	156.06	County Line – Neligh East 115kV CKT 1
County Line – Neligh East 115kV CKT 1	240	104.47	Bloomfield – Gavins Point 115kV CKT 1
Fort Randall – GEN-2014-023 Tap 230kV CKT 1	320	109.69	Kelly – Meadow Grove 230kV CKT 1
GEN-2014-059 Tap – Ogallala 230kV CKT 1	320	126.06	Keystone – Sidney 345kV CKT 1
Gentleman Generation Station Flowgate	1635	105.44	System intact
Norfolk – North Norfolk 115kV CKT 1	120	116.19	Hoskins – North Norfolk 115kV CKT 1
North Petersburg – Petersburg 115kV CKT 1	137	131.40	LN-1163-2
Victory Hill 230/115/13kV Transformer CKT 1	187	105.31	Stegall – Wayside 230kV CKT 1

Group 9 (Stand Alone)

The Interconnection Requests were studied as a Stand Alone Interconnection Request in addition to the Cluster Analysis. Fort Randall – GEN-2014-023 Tap 230kV, Meadow Grove – Kelly (Columbus) 230kV, and Albion – Petersburg – North Petersburg 115kV are constraints for Stand Alone Analysis for GEN-2014-023. An analysis for limited operation indicates that Limited Operation for GEN-2014-023 Interconnection Request will be limited to 6 MW prior to the in-service date of the upgrade(s) to alleviate these constraints. The Gentleman Generating Station ("GGS") flowgate and GEN-2014-059 Tap – Ogallala 230kV transmission circuit are constraints. An analysis for limited operation indicates that Limited Operation for GEN-2014-059 Interconnection Request will be limited to 0MW prior to the in-service date of the upgrade(s) to alleviate these constraints. Currently, GEN-2014-060 does not have any ERIS or NRIS constraints in the Stand Alone Analysis. Currently, GEN-2015-007 does not have any ERIS constraints in the Stand Alone Analysis. Various ERIS and NRIS

constraints in the Petersburg, Neligh, Battle Creek, and Bloomfield area were identified in the GEN-2015-008 Stand Alone Analysis. An analysis for limited operation indicates that Limited Operation for GEN-2015-008 Interconnection Request will be limited to 0MW prior to the in-service date of the upgrade(s) to alleviate these constraints. Holt County – Grand Island 345kV is a constraint for GEN-2015-023 Stand Alone Analysis. An analysis for limited operation indicates that Limited Operation for GEN-2015-023 Interconnection Request will be limited to 0MW prior to the in-service date of the upgrade(s) to alleviate these constraints. For Stand Alone Cost Allocation please refer to Appendix E1.

Group 9 (Limited Operation)

Limited Operation results are listed below. While these results are based on the criteria listed in GIP 8.4.3, the Interconnection Customer may request additional scenarios for Limited Operation based on higher queued Interconnection Requests not being placed in service.

Limited Operation Analysis		
Interconnection Request	**MW**	**Constraint that most limits LOIS**
GEN-2014-023	6	Fort Randall – GEN-2014-023 Tap 230kV CKT 1
GEN-2014-059	0	GEN-2014-059 Tap – Ogallala 230kV CKT Gentleman – Red Willow Flowgate Gentleman Stability Limitations
GEN-2014-060	125.8	None
GEN-2015-007	160	None
GEN-2015-008	0	Various Most Limiting Constraints
GEN-2015-023	0	Holt County – Grand Island 345kV

Cluster Group 10 (Southeast Oklahoma/Northeast Texas Area)

In addition to the 0.0 MW of previously queued generation in the area, 0.0 MW of new interconnection service was studied. No new constraints were found in this area.

Cluster Group 12 (Northwest Arkansas Area)

In addition to the 30.0 MW of previously queued generation in the area, 60.0 MW of new interconnection service was studied. No new constraints were found in this area.

Cluster ERIS Constraints			
MONITORED ELEMENT	**Limiting Rate A/B (MVA)**	**TC%LOADING (% MVA)**	**CONTINGENCY**
Currently, No ERIS Group 13 constraints			

Cluster NRIS Constraints			
MONITORED ELEMENT	**Limiting Rate A/B (MVA)**	**TC%LOADING (% MVA)**	**CONTINGENCY**
Currently, No NRIS Group 13 constraints			

Group 12 (Stand Alone)

The Interconnection Requests were studied as a Stand Alone Interconnection Request in addition to the cluster analysis. Currently, no ERIS or NRIS mitigation constraints for GEN-2015-019 are identified in the Stand Alone Analysis. For Stand Alone Cost Allocation please refer to Appendix E1.

Group 12 (Limited Operation)

Limited Operation results are listed below. While these results are based on the criteria listed in GIP 8.4.3, the Interconnection Customer may request additional scenarios for Limited Operation based on higher queued Interconnection Requests not being placed in service.

Limited Operation Analysis		
Interconnection Request	**MW**	**Constraint that most limits LOIS**
GEN-2015-019	60	None

Cluster Group 13 (Northeast Kansas/Northwest Missouri Area)

In addition to the 608.6 MW of previously queued generation in the area, 200.1 MW of new interconnection service was studied. No new constraints were found in this area. SPP Interconnection Service for GEN-2015-005 would be dependent on the in-service of the Nebraska City – Mullins Creek - Sibley 345kV transmission circuit that is part of the SPP Priority Projects per SPP-NTC-20097 and SPP-NTC-20098, and the decommissioning of the GEN-2015-005 temporary Point of Interconnection (POI) at Associated Electric Cooperative, Inc.'s (AECI) Osborn 161kV.

Cluster ERIS Constraints			
MONITORED ELEMENT	**Limiting Rate A/B (MVA)**	**TC%LOADING (% MVA)**	**CONTINGENCY**
Currently, No ERIS Group 13 constraints			

Cluster NRIS Constraints			
MONITORED ELEMENT	**Limiting Rate A/B (MVA)**	**TC%LOADING (% MVA)**	**CONTINGENCY**
Currently, No NRIS Group 13 constraints			

Group 13 (Stand Alone)

The Interconnection Requests were studied as a Stand Alone Interconnection Request in addition to the cluster analysis. Currently, no ERIS or NRIS mitigation constraints for GEN-2015-005 are identified in the Stand Alone Analysis. For Stand Alone Cost Allocation please refer to Appendix E1.

Group 13 (Limited Operation)

Limited Operation results are listed below. While these results are based on the criteria listed in GIP 8.4.3, the Interconnection Customer may request additional scenarios for Limited Operation based on higher queued Interconnection Requests not being placed in service.

Limited Operation Analysis		
Interconnection Request	**MW**	**Constraint that most limits LOIS**
GEN-2015-005	200.1	None

Cluster Group 14 (South Central Oklahoma Area)

In addition to the 612.50 MW of previously queued generation in the area, 0.0 MW of new interconnection service was studied. No current studies, DISIS-2015-001 Interconnection Customers, are located in this geographical group.

Curtailment and System Reliability

In no way does this study guarantee operation for all periods of time. It should be noted that although this study analyzed many of the most probable contingencies, it is not an all-inclusive list and cannot account for every operational situation. Because of this, it is likely that the Customer(s) may be required to reduce their generation output to 0 MW, also known as curtailment, under certain system conditions to allow system operators to maintain the reliability of the transmission network.

Stability & Short Circuit Analysis

A stability and short circuit analysis is conducted for each Interconnection Customer using modified versions of the 2014 series SPP Model Development Working Group (MDWG) Models 2015 winter, 2015 summer, and 2025 summer peak dynamic cases[9]. The stability analysis is conducted with all upgrades in service that are identified in the power flow analysis unless otherwise noted in the individual group stability study. For each group, the interconnection requests are studied at 100% nameplate output while the other groups are dispatched at 20% output for Variable Energy Resource (VER) requests and 100% output for other requests. The output of the Interconnection Customer's facility is offset in each model by a reduction in output of existing online SPP generation. Each Interconnection Request is studied in a Stand Alone scenario in addition to the cluster scenario. A synopsis is included for each group. The entire stability study for each group can be found in the Appendices.

Short-circuit analysis is performed but verification of over-dutied equipment is performed by the Transmission Owner within the Interconnection Facilities Study. Results of that analysis may require additional costs to replace circuit breakers and associated equipment.

Cluster Group 1 (Woodward Area)

The Group 1 stability analysis for this area was performed by ABB. Stability analysis has determined that with all previously assigned and currently assigned Network Upgrades placed in service the transmission system will remain stable and low voltage ride through requirements are satisfied for the probable contingencies studied. Power Factor requirements are listed in the table below. In addition, some Interconnection Requests may have requirements for reactors under low wind conditions as identified in the ABB Group 1 report.

Power Factor Requirements:

Request	Size (MW)	Generator Model	Point of Interconnection	Power Factor Requirement at POI*	
				Lagging (supplying)	Leading (absorbing)
GEN-2015-029**	161	G.E. 2.3MW	Tatonga 345kV	0.95	0.95

*As reactive power is required for all projects, the final requirement in the GIA will be the pro-forma 95% lagging to 95% leading at the point of interconnection.
** Requirement for reactors for low wind conditions

Cluster Group 2 (Hitchland Area)

The Group 2 stability analysis for this area was performed by PSC North America (PSC). Stability analysis has determined that with all previously assigned and currently assigned Network Upgrades

[9] Short Circuit analysis performed only on the 2025 Summer Peak seasonal model. Group 6 Stability Analysis also includes 2020 Summer and Winter Peak seasons.

placed in service the transmission system will remain stable and low voltage ride through requirements are satisfied for the probable contingencies studied. Certain contingencies related to the 345kV paths from Hitchland to Beaver County to Woodward and from Hitchland to Finney to Holcomb resulted in instabilities. Mitigation for these contingencies included a new 345kV line from Beaver County to Grapevine (a new substation) to Chisholm and in some cases curtailing generation.

Power Factor requirements are listed in the table below. The Vestas V110 VCSS wind turbine generator has a limited reactive capability, and facilities using those wind turbine generators may need external reactive equipment to meet the +/- 0.95 power factor requirement at the POI. In addition, some Interconnection Requests may have requirements for reactors under low wind conditions as identified in the PSC Group 2 report.

Power Factor Requirements:

Request	Size (MW)	Generator Model	Point of Interconnection	Power Factor Requirement at POI*	
				Lagging (supplying)	Leading (absorbing)
GEN-2014-037**	200	Vestas V110 VCSS 2.0MW	Tap on Hitchland to Beaver County 345kV (Optima 345kV)	0.95	0.95
GEN-2014-038**	200	Vestas V110 VCSS 2.0MW	Tap on Hitchland to Potter County 345kV	0.95	0.95
GEN-2015-006**	150	Vestas V100 VCSS 2.0MW	Beaver County 345kV	0.95	0.95

*As reactive power is required for all projects, the final requirement in the GIA will be the pro-forma 95% lagging to 95% leading at the point of interconnection.
** Requirement for reactors for low wind conditions

Cluster Group 3 (Spearville Area)

The Group 3 stability analysis for this area was performed by S&C Electric Company (S&C). Stability analysis has determined that with all previously assigned and currently assigned Network Upgrades placed in service the transmission system will remain stable and low voltage ride through requirements are satisfied for the probable contingencies studied. Certain instabilities were encountered for extreme events that will be mitigated through generation curtailment. GEN-2015-021 tripped offline due to an over frequency violation for a contingency near its POI. The vendor of the solar generator will need to be contacted to determine if an extended frequency protection option is available. Power Factor requirements are listed in the table below. In addition, some Interconnection Requests may have requirements for reactors under low wind conditions as identified in the S&C Group 3 report.

Power Factor Requirements:

Request	Size (MW)	Generator Model	Point of Interconnection	Power Factor Requirement at POI*	
				Lagging (supplying)	Leading (absorbing)
GEN-2015-021	20	AE	Johnson Corner 115kV	0.95	0.95
GEN-2015-026	8.3	Siemens	Buckner 345kV	0.95	0.95

Request	Size (MW)	Generator Model	Point of Interconnection	Power Factor Requirement at POI*	
				Lagging (supplying)	Leading (absorbing)
GEN-2015-027	4.5	Siemens	Crooked Creek 115kV	0.95	0.95
ASGI-2015-001	4.27/ 6.13	GENSAL	Ninnescah 115kV	0.95	0.95

*As reactive power is required for all projects, the final requirement in the GIA will be the pro-forma 95% lagging to 95% leading at the point of interconnection.
** Requirement for reactors for low wind conditions

Cluster Group 4 (Northwest Kansas)

The Group 4 stability analysis for this area was performed by Power-tek Global Inc. (Power-tek). Stability analysis has determined that with all previously assigned and currently assigned Network Upgrades placed in service the transmission system will remain stable and low voltage ride through requirements are satisfied for the probable contingencies studied. Power Factor requirements are listed in the table below. In addition, some Interconnection Requests may have requirements for reactors under low wind conditions as identified in the Power-tek Group 4 report.

Power Factor Requirements:

Request	Size (MW)	Generator Model	Point of Interconnection	Power Factor Requirement at POI*	
				Lagging (supplying)	Leading (absorbing)
GEN-2010-048	70	Nordex 2.5MW	Tap on Ross Beach – Redline 69kV	0.95	0.95
GEN-2015-017	155/ 172	GENROU	Mingo 115kV	0.95	0.95

*As reactive power is required for all projects, the final requirement in the GIA will be the pro-forma 95% lagging to 95% leading at the point of interconnection.
** Requirement for reactors for low wind conditions

Cluster Group 5 (Amarillo Area)

The Group 5 stability analysis for this area was performed by Quanta Technology, LLC (Quanta Technology). Stability analysis has determined that with all previously assigned and currently assigned Network Upgrades placed in service the transmission system will remain stable and low voltage ride through requirements are satisfied for the probable contingencies studied. Power Factor requirements are listed in the table below.

Power Factor Requirements:

Request	Size (MW)	Generator Model	Point of Interconnection	Power Factor Requirement at POI*	
				Lagging (supplying)	Leading (absorbing)
GEN-2014-068	196/ 203	GENROU	Tap on Deaf Smith – Plant X 230kV	0.95	0.95

*As reactive power is required for all projects, the final requirement in the GIA will be the pro-forma 95% lagging to 95% leading at the point of interconnection.

Cluster Group 6 (South Texas Panhandle/New Mexico)

The Group 6 stability analysis for this area was performed by Mitsubishi Electric Power Products Inc. (MEPPI). The stability analysis has shown that for an outage of the G14-074 Tap to Tuco 345kV line GEN-2014-074 would trip offline due to high voltage. The mitigation for this outage is to add a 0/-30Mvar SVC at the G14-07Tap 345kV bus. With this 0/-30Mvar SVC and with all previously assigned and currently assigned Network Upgrades placed in service the transmission system will remain stable and low voltage ride through requirements are satisfied for the probable contingencies studied.

Power Factor requirements are listed in the table below. In addition, some Interconnection Requests may have requirements for reactors under low wind conditions as identified in the MEPPI Group 6 report. The power factor analysis showed that for an outage of the OKU to G14-074 Tap 345kV line that the voltage at Border 345kV collapsed. The mitigation for the outage is to increase the SVC at Border 345kV to 200Mvar and to install a 200Mvar capacitor at Border 345kV.

Power Factor Requirements:

Request	Size (MW)	Generator Model	Point of Interconnection	Power Factor Requirement at POI*	
				Lagging (supplying)	Leading (absorbing)
GEN-2014-046	125.4	SMA SC 825CP Inverter	Chaves County 115kV	0.95	0.95
GEN-2014-065	99.0	SMA SC 900CP Inverter	Whitten 115kV	0.95	0.95
GEN-2014-074**	152.0	Vestas V110 2.0MW	Tap Tuco – OKU 345kV	0.95	0.95
GEN-2015-009**	300.0	Vestas V110 2.0MW	Hobbs 230kV	0.95	0.95
GEN-2015-010**	250.7	GE 2.3MW	Tap on Roosevelt South to Tolk East 230kV	0.95	0.95
GEN-2015-014	150.0	Vestas V110 2.0MW	Tap on Cochran – LG Plains 115kV	0.95	0.95
GEN-2015-018	80.0	GE 2.0MW	Tap on Curry County to Bailey County 115kV	0.95	0.95
GEN-2015-020	100.0	Eaton Power Xpert Solar 1.67MW	Oasis 115kV	0.95	0.95
GEN-2015-022	112.0	GE LV5 4.0MW Inverters	Swisher 115kV	0.95	0.95
ASGI-2015-002	2.0	GE 2.0MW	Yuma Interchange 115/69kV	0.95	0.95
ASGI-2015-003	30.0	AE 1000NX 1.0MW	FEC New POI 115kV	0.95	0.95

*As reactive power is required for all projects, the final requirement in the GIA will be the pro-forma 95% lagging to 95% leading at the point of interconnection.
** Requirement for reactors for low wind conditions

Cluster Group 7 (Southwest Oklahoma)

The Group 7 stability analysis for this area was performed by Burns and McDonnell Engineering Company, Inc. (Burns and McDonnell). Stability analysis has determined that with all previously assigned and currently assigned Network Upgrades placed in service the transmission system will remain stable and low voltage ride through requirements are satisfied for the probable contingencies studied. Power Factor requirements are listed in the table below. In addition, some Interconnection Requests may have requirements for reactors under low wind conditions as identified in the Burns and McDonnell Group 7 report.

Power Factor Requirements:

Request	Size (MW)	Generator Model	Point of Interconnection	Power Factor Requirement at POI*	
				Lagging (supplying)	Leading (absorbing)
GEN-2015-004**	52.9	Siemens 2.3MW	Border 345kV	0.95	0.95
GEN-2015-013	120	Eaton Power Xpert Solar Inverters 1.67MW	Snyder 138kV	0.95	0.95

*As reactive power is required for all projects, the final requirement in the GIA will be the pro-forma 95% lagging to 95% leading at the point of interconnection.
** Requirement for reactors for low wind conditions

Cluster Group 8 (South Central Kansas/North Oklahoma)

The Group 8 stability analysis for this area was performed by Mitsubishi Electric Power Products Inc. (MEPPI). Stability analysis has determined that with all previously assigned and currently assigned Network Upgrades placed in service the transmission system will remain stable and low voltage ride through requirements are satisfied for the probable contingencies studied. Power Factor requirements are listed in the table below. In addition, some Interconnection Requests may have requirements for reactors under low wind conditions as identified in the Group 8 report.

Power Factor Requirements:

Request	Size (MW)	Generator Model	Point of Interconnection	Power Factor Requirement at POI*	
				Lagging (supplying)	Leading (absorbing)
GEN-2015-001**	200	Vestas V110 2.0MW	Ranch Road 345kV	0.95	0.95
GEN-2015-003**	200	Vestas V110 2.0MW	Renfrow 345kV	0.95	0.95

Request	Size (MW)	Generator Model	Point of Interconnection	Power Factor Requirement at POI*	
				Lagging (supplying)	Leading (absorbing)
GEN-2015-015	154.5	Siemens 2.3MW with PowerBoost (2.415MW)	Tap Medford – Coyote 138kV	0.95	0.95
GEN-2015-016	200	Vestas V110 2.0MW	Tap Centerville – Marmaton 161kV	0.95	0.95
GEN-2015-024**	220	G.E. 2.0MW	Tap Wichita – Thistle 345kV	0.95	0.95
GEN-2015-025**	220	G.E. 2.0MW	Tap Wichita – Thistle 345kV	0.95	0.95
GEN-2015-028	3	Uprate from Siemens 2.3 to 2.415MW	Nardins 69kV	0.95	0.95
GEN-2015-030**	200.1	G.E. 2.3MW	Sooner 345kV	0.95	0.95
ASGI-2015-004	54.3/ 56.3	GENSAL	Coffeyville 69kV	0.95	0.95

*As reactive power is required for all projects, the final requirement in the GIA will be the pro-forma 95% lagging to 95% leading at the point of interconnection.
** Requirement for reactors for low wind conditions

Cluster Group 9 (Nebraska)

The Group 9 stability analysis for this area was performed by S&C Electric (S&C). Stability analysis has determined, with the exception of faults around Gerald Gentleman Station (GGS), that with all previously assigned and currently assigned Network Upgrades placed in service the transmission system will remain stable and low voltage ride through requirements are satisfied for the probable contingencies studied. **Additional analysis is required to further evaluate the effects of GEN-2014-059 on the Gerald Gentleman stability interface. This analysis will take place during the Facility Study.** GEN-2015-023 exhibited instability for certain contingencies in the 2015 summer peak and the 2015 winter peak cases. If GEN-2015-023 requires service prior to the in-service date of the Gentleman – Cherry County/Thedford – Holt County 345kV Project ("R-Plan") previously assigned in SPP 2012 Integrated Transmission Plan 10 Year Assessment (ITP10), per SPP-NTC-200220, the Interconnection Customer will need to request an advancement of this upgrade. Power Factor requirements are listed in the table below. In addition, some Interconnection Requests may have requirements for reactors under low wind conditions as identified in the Group 9 report.

Power Factor Requirements:

Request	Size (MW)	Generator Model	Point of Interconnection	Power Factor Requirement at POI*	
				Lagging (supplying)	Leading (absorbing)
GEN-2014-023**	79.9	G.E. 1.7MW	Tap Fort Randall-Meadow Grove 230kV	0.95	0.95
GEN-2014-059**	160	G.E. 1.79MW	Tap Sidney-Ogallala 230kV	0.95	0.95
GEN-2014-060	125.8	G.E. 1.70MW	Tap Pauline-Hildreth 115kV	0.95	0.95
GEN-2015-007	160	G.E.	Hoskins 345kV	0.95	0.95
GEN-2015-008	150.4	G.E.	Antelope 115kV	0.95	0.95
GEN-2015-023	300.8	G.E.	Holt County 345kV	0.95	0.95

*As reactive power is required for all projects, the final requirement in the GIA will be the pro-forma 95% lagging to 95% leading at the point of interconnection.
** Requirement for reactors for low wind conditions

Cluster Group 10 (Southeast Oklahoma/Northeast Texas Area)

There were no customers requesting interconnection service in the southeast Oklahoma/northeast Texas area.

Cluster Group 12 (Northwest Arkansas Area)

The Group 12 stability analysis for this area was performed by ABB. Stability analysis has determined that with all previously assigned and currently assigned Network Upgrades placed in service the transmission system will remain stable and low voltage ride through requirements are satisfied for the probable contingencies studied. Power Factor requirements are listed in the table below.

Power Factor Requirements:

Request	Size (MW)	Generator Model	Point of Interconnection	Power Factor Requirement at POI*	
				Lagging (supplying)	Leading (absorbing)
GEN-2015-019	60	GENROU	Fitzhugh 161kV	0.95	0.95

*As reactive power is required for all projects, the final requirement in the GIA will be the pro-forma 95% lagging to 95% leading at the point of interconnection.
** Requirement for reactors for low wind conditions

Cluster Group 13 (Northwest Missouri Area)

The Group 13 stability analysis for this area was performed by Power-tek Global (Power-tek). Stability analysis has determined that with all previously assigned and currently assigned Network Upgrades placed in service the transmission system will remain stable and low voltage ride through requirements are satisfied for the probable contingencies studied. Power Factor requirements are listed in the table below. In addition, some Interconnection Requests may have requirements for reactors under low wind conditions as identified in the Power-tek report.

Power Factor Requirements:

Request	Size (MW)	Generator Model	Point of Interconnection	Power Factor Requirement at POI*	
				Lagging (supplying)	Leading (absorbing)
GEN-2015-005**	200	G.E. 1.79MW	Tap Nebraska City – Mullens Creek 345kV	0.95	0.95

*As reactive power is required for all projects, the final requirement in the GIA will be the pro-forma 95% lagging to 95% leading at the point of interconnection.
** Requirement for reactors for low wind conditions

Cluster Group 14 (South Central Oklahoma)

There were no customers requesting Interconnection Service in the south central Oklahoma area.

Conclusion

The minimum cost of interconnecting 5,460.29 MW of new generation interconnection requests included in this Definitive Interconnection System Impact Study is estimated at $1,102,966,416 (exclusive of Gentleman Flowgate Upgrade Mitigation Costs) for the Allocated Network Upgrades and Transmission Owner Interconnection Facilities listed in Appendix E and F. These costs do not include the cost of upgrades of other transmission facilities listed in Appendix H which are Network Constraints. These interconnection costs do not include any cost of any Network Upgrades that are identified as required through the short circuit analysis. Potential over-duty circuit breakers capability will be identified by the Transmission Owner in the Interconnection Facilities Study.

Further refinement of total estimated interconnection costs will be provided, should the Interconnection Customer meet the requirements for acceptance and choose to move into the Interconnection Facilities Study following the posting of this DISIS. The Interconnection Facilities Study may include additional study analysis, additional facility upgrades not yet identified by this DISIS, such as circuit breaker replacements and affected system facilities, and further refinement of existing cost estimates. Acceptance into the Interconnection Facilities Study requires execution of the Interconnection Facilities Study Agreement, additional security deposit of $3,000/MW of request, and other required data as requested by the Generator Interconnection Procedures. More information regarding the next steps as an Interconnection Customer may be found in Section 8.6 of the GIP. Requirements for acceptance into the Interconnection Facilities Study can be found in Section 8.9 of the GIP.

The required interconnection costs listed in Appendices E, and F, and other upgrades associated with Network Constraints do not include all costs associated with the deliverability of the energy to final customers. These costs are determined by separate studies if the Customer submits a Transmission Service Request (TSR) through SPP's Open Access Same Time Information System (OASIS) as required by Attachment Z1 of the SPP Open Access Transmission Tariff (OATT).

Appendices

A: Generation Interconnection Requests Considered for Impact Study

See next page.

A: Generation Interconnection Requests Considered for Study

Request	Amount	Service	Area	Requested Point of Interconnection	Proposed Point of Interconnection	Requested In-Service Date	In Service Date Delayed Until no earlier than*
ASGI-2015-001	6.13	ER	SUNCMKEC	Ninnescah 115kV	Ninnescah 115kV		TBD
ASGI-2015-002	2.00	ER	SPS	SP-Yuma 69kV	SP-Yuma 69kV		TBD
ASGI-2015-003	30.00	ER	SPS	Tap San Jon Tap - Wheatland 115/69kV	Tap San Jon Tap - Wheatland 115/69kV		TBD
ASGI-2015-004	56.36	ER	GRDA	Coffeyville City 69kV	Coffeyville City 69kV		TBD
GEN-2010-048	70.00	ER	MIDW	Tap Beach Station - Redline 115kV	Tap Beach Station - Redline 115kV	12/30/2017	TBD
GEN-2014-023	79.90	ER/NR	NPPD	Tap Fort Randall - Meadow Grove 230kV	Tap Fort Randall - Meadow Grove 230kV	12/31/2015	TBD
GEN-2014-037	200.00	ER	SPS	Tap Hitchland - Beaver County Dbl Ckt (Optima) 345kV	Tap Hitchland - Beaver County Dbl Ckt (Optima) 345kV	9/30/2017	TBD
GEN-2014-038	200.00	ER	SPS	Tap Hitchland - Potter County 345kV	Tap Hitchland - Potter County 345kV	9/30/2017	TBD
GEN-2014-046	125.40	ER/NR	SPS	Chaves County 115kV	Chaves County 115kV	5/1/2016	TBD
GEN-2014-059	160.00	ER/NR	NPPD	Tap Sidney - Ogallala 230kV	Tap Sidney - Ogallala 230kV	9/1/2016	TBD
GEN-2014-060	125.80	ER/NR	NPPD	Tap Pauline - Hildreth (Rosemont) 115kV	Tap Pauline - Hildreth (Rosemont) 115kV	12/31/2015	TBD
GEN-2014-065	99.00	ER/NR	SPS	Whitten 115kV	Whitten 115kV	12/31/2016	TBD
GEN-2014-068	203.00	ER/NR	SPS	Tap Deaf Smith - Plant X 230kV	Tap Deaf Smith - Plant X 230kV	3/1/2019	TBD
GEN-2014-074	152.00	ER/NR	SPS	Tap TUCO Interchange - Oklaunion 345kV	Tap TUCO Interchange - Oklaunion 345kV	10/31/2017	TBD
GEN-2015-001	200.00	ER/NR	OKGE	Ranch Road 345kV	Ranch Road 345kV	12/31/2016	TBD
GEN-2015-003	200.00	ER	OKGE	Renfrow 345kV	Renfrow 345kV	12/31/2017	TBD
GEN-2015-004	52.90	ER	OKGE	Border 345kV	Border 345kV	5/15/2017	TBD
GEN-2015-005	200.10	ER	GMO	Tap Nebraska City - Sibley 345kV	Tap Nebraska City - Sibley 345kV	12/31/2017	TBD
GEN-2015-006	150.00	ER	OKGE	Beaver County 345kV	Beaver County 345kV	12/31/2017	TBD
GEN-2015-007	160.00	ER	NPPD	Hoskins 345kV	Hoskins 345kV	12/31/2016	TBD
GEN-2015-008	150.40	ER/NR	NPPD	Antelope 115kV	Antelope 115kV	12/1/2016	TBD
GEN-2015-009	300.00	ER/NR	SPS	Hobbs 230kV	Hobbs 230kV	9/1/2020	TBD
GEN-2015-010	250.70	ER	SPS	Curry County 115kV	Tap South Roosvelt - Tolk 230kV	12/1/2017	TBD
GEN-2015-013	120.00	ER/NR	WFEC	Synder 138kV	Synder 138kV	12/1/2016	TBD
GEN-2015-014	150.00	ER	SPS	Lehman 115kV	Tap Cochran - Lehman 115kV	12/1/2016	TBD
GEN-2015-015	154.60	ER/NR	OKGE	Tap Medford Tap - Coyote 138kV	Tap Medford Tap - Coyote 138kV	7/31/2016	TBD
GEN-2015-016	200.00	ER/NR	KCPL	Tap Marmaton - Centerville 161kV	Tap Marmaton - Centerville 161kV	12/31/2017	TBD
GEN-2015-017	172.00	ER/NR	SUNCMKEC	Mingo 115kV	Mingo 115kV	8/1/2018	TBD
GEN-2015-018	80.00	ER/NR	SPS	Tap Curry County - Bailey 115kV	Tap Curry County - Bailey 115kV	12/31/2016	TBD
GEN-2015-019	60.00	ER/NR	AEPW	Fitzhugh 161kV	Fitzhugh 161kV	1/1/2017	TBD
GEN-2015-020	99.96	ER/NR	SPS	Oasis 115kV	Oasis 115kV	12/1/2016	TBD
GEN-2015-021	20.00	ER/NR	SUNCMKEC	Johnson Corner 115kV	Johnson Corner 115kV	12/31/2016	TBD
GEN-2015-022	112.00	ER/NR	SPS	Swisher 115kV	Swisher 115kV	12/1/2016	TBD
GEN-2015-023	300.70	ER/NR	NPPD	Holt County 345kV	Holt County 345kV	12/31/2019	TBD
GEN-2015-024	220.00	ER	WERE	Wichita 345kV	Tap Thistle - Wichita 345kV Dbl CKT	12/31/2016	TBD
GEN-2015-025	220.00	ER	WERE	Wichita 345kV	Tap Thistle - Wichita 345kV Dbl CKT	12/31/2016	TBD
GEN-2015-026	8.30	ER	SUNCMKEC	Buckner 345kV	Buckner 345kV	3/1/2016	TBD
GEN-2015-027	4.94	ER	SUNCMKEC	Crooked Creek 115kV	Crooked Creek 115kV	3/1/2016	TBD
GEN-2015-028	3.00	ER	OKGE	Nardins 69kV	Nardins 69kV	3/1/2016	TBD
GEN-2015-029	161.00	ER	OKGE	Tatonga 345kV	Tatonga 345kV	12/1/2016	TBD

Request	Amount	Service	Area	Requested Point of Interconnection	Proposed Point of Interconnection	Requested In-Service Date	In Service Date Delayed Until no earlier than*
GEN-2015-030	200.10	ER	OKGE	Sooner 345kV	Sooner 345kV	12/1/2017	TBD
Total:	5,460.29						

*In-Service Date for each request is to be determined after the Interconnection Facility Study is completed.

B: Prior Queued Interconnection Requests

See next page.

B: Prior Queued Interconnection Requests

Request	Amount	Area	Requested/Proposed Point of Interconnection	Status or In-Service Date
ASGI-2010-006	150.00	AECI	Tap Fairfax (AECI) - Shilder (AEPW) 138kV	AECI queue Affected Study
ASGI-2010-010	42.20	SPS	Lovington 115kV	Lea County Affected Study
ASGI-2010-020	30.00	SPS	Tap LE-Tatum - LE-Crossroads 69kV	Lea County Affected Study
ASGI-2010-021	15.00	SPS	Tap LE-Saunders Tap - LE-Anderson 69kV	Lea County Affected Study
ASGI-2011-001	27.30	SPS	Lovington 115kV	On-Line
ASGI-2011-002	20.00	SPS	Herring 115kV	On-Line
ASGI-2011-003	10.00	SPS	Hendricks 115kV	On-Line
ASGI-2011-004	20.00	SPS	Pleasant Hill 69kV	Under Study (DISIS-2011-002)
ASGI-2012-002	18.15	SPS	FE-Clovis Interchange 115kV	Under Study (DISIS-2012-002)
ASGI-2012-006	22.50	SUNCMKEC	Tap Hugoton - Rolla 69kV	Under Study (DISIS-2012-001)
ASGI-2013-001	11.50	SPS	PanTex South 115kV	Under Study (DISIS-2013-001)
ASGI-2013-002	18.40	SPS	FE Tucumcari 115kV	Under Study (DISIS-2013-001)
ASGI-2013-003	18.40	SPS	FE Clovis 115kV	Under Study (DISIS-2013-001)
ASGI-2013-004	36.60	SUNCMKEC	Morris 115kV	Under Study (DISIS-2013-002)
ASGI-2013-005	1.65	SPS	FE Clovis 115kV	Under Study (DISIS-2013-002)
ASGI-2013-006	2.00	SPS	SP-Erskine 115kV	
ASGI-2014-001	2.50	SPS	SP-Erskine 115kV	Under Study (DISIS-2014-001)
ASGI-2014-002	49.60	SPS	Tap Tucumcari - Santa Rosa 115kV	Under Study (DISIS-2014-001)
ASGI-2014-005	10.00	SPS	Strata 69kV	Under Study (DISIS-2014-002)
ASGI-2014-008	10.00	SPS	South Loving 69kV	Under Study (DISIS-2014-002)
ASGI-2014-009	10.00	SPS	Wood Draw 115kV	Under Study (DISIS-2014-002)
ASGI-2014-010	10.00	SPS	Ochoa 115kV	Under Study (DISIS-2014-002)
ASGI-2014-012	10.00	SPS	Cooper Ranch 115kV	Under Study (DISIS-2014-002)
ASGI-2014-014	56.40	GRDA	Ferguson 69kV	Under Study (DISIS-2014-002)
GEN-2001-014	96.00	WFEC	Ft Supply 138kV	On-Line
GEN-2001-026	74.30	WFEC	Washita 138kV	On-Line
GEN-2001-033	180.00	SPS	San Juan Tap 230kV	On-Line at 120MW
GEN-2001-036	80.00	SPS	Norton 115kV	On-Line
GEN-2001-037	100.00	OKGE	FPL Moreland Tap 138kV	On-Line
GEN-2001-039A	105.00	SUNCMKEC	Shooting Star Tap 115kV	On-Line
GEN-2001-039M	100.00	SUNCMKEC	Central Plains Tap 115kV	On-Line
GEN-2002-004	200.00	WERE	Latham 345kV	On-Line at 150MW
GEN-2002-005	120.00	WFEC	Red Hills Tap 138kV	On-Line
GEN-2002-008	240.00	SPS	Hitchland 345kV	On-Line at 120MW
GEN-2002-009	80.00	SPS	Hansford 115kV	On-Line
GEN-2002-022	240.00	SPS	Bushland 230kV	On-Line
GEN-2002-023N	0.80	NPPD	Harmony 115kV	On-Line
GEN-2002-025A	150.00	SUNCMKEC	Spearville 230kV	On-Line
GEN-2003-004	100.00	WFEC	Washita 138kV	On-Line
GEN-2003-005	100.00	WFEC	Anadarko - Paradise (Blue Canyon) 138kV	On-Line
GEN-2003-006A	200.00	SUNCMKEC	Elm Creek 230kV	On-Line
GEN-2003-019	250.00	MIDW	Smoky Hills Tap 230kV	On-Line
GEN-2003-020	160.00	SPS	Martin 115kV	On-Line
GEN-2003-021N	75.00	NPPD	Ainsworth Wind Tap 115kV	On-Line
GEN-2003-022	120.00	AEPW	Washita 138kV	On-Line
GEN-2004-014	154.50	SUNCMKEC	Spearville 230kV	On-Line at 100MW
GEN-2004-020	27.00	AEPW	Washita 138kV	On-Line

Request	Amount	Area	Requested/Proposed Point of Interconnection	Status or In-Service Date
GEN-2004-023	20.60	WFEC	Washita 138kV	On-Line
GEN-2004-023N	75.00	NPPD	Columbus Co 115kV	On-Line
GEN-2005-003	30.60	WFEC	Washita 138kV	On-Line
GEN-2005-008	120.00	OKGE	Woodward 138kV	On-Line
GEN-2005-012	250.00	SUNCMKEC	Ironwood 345kV	On-Line at 160MW
GEN-2005-013	201.00	WERE	Caney River 345kV	On-Line
GEN-2006-002	101.00	AEPW	Sweetwater 230kV	On-Line
GEN-2006-006	205.50	SUNCMKEC	Spearville 345kV	On Suspension
GEN-2006-018	170.00	SPS	TUCO Interchange 230kV	On-Line
GEN-2006-020N	42.00	NPPD	Bloomfield 115kV	On-Line
GEN-2006-020S	18.90	SPS	DWS Frisco 115kV	On-Line
GEN-2006-021	101.00	SUNCMKEC	Flat Ridge Tap 138kV	On-Line
GEN-2006-024S	19.80	WFEC	Buffalo Bear Tap 69kV	On-Line
GEN-2006-026	502.00	SPS	Hobbs 230kV & Hobbs 115kV	On-Line
GEN-2006-031	75.00	MIDW	Knoll 115kV	On-Line
GEN-2006-035	225.00	AEPW	Sweetwater 230kV	On-Line at 132MW
GEN-2006-037N1	75.00	NPPD	Broken Bow 115kV	On-Line
GEN-2006-038N005	80.00	NPPD	Broken Bow 115kV	On-Line
GEN-2006-038N019	80.00	NPPD	Petersburg North 115kV	On-Line
GEN-2006-043	99.00	AEPW	Sweetwater 230kV	On-Line
GEN-2006-044	370.00	SPS	Hitchland 345kV	On-Line at 120MW
GEN-2006-044N	40.50	NPPD	North Petersburg 115kV	On-Line
GEN-2006-046	131.00	OKGE	Dewey 138kV	On-Line
GEN-2007-011N08	81.00	NPPD	Bloomfield 115kV	On-Line
GEN-2007-021	201.00	OKGE	Tatonga 345kV	On-Line
GEN-2007-025	300.00	WERE	Viola 345kV	On-Line
GEN-2007-032	150.00	WFEC	Tap Clinton Junction - Clinton 138kV	On Suspension
GEN-2007-040	200.00	SUNCMKEC	Buckner 345kV	On-Line at 132MW
GEN-2007-043	200.00	OKGE	Minco 345kV	On-Line
GEN-2007-044	300.00	OKGE	Tatonga 345kV	On-Line at 199MW
GEN-2007-046	200.00	SPS	Hitchland 115kV	On Schedule for 2015
GEN-2007-050	170.00	OKGE	Woodward EHV 138kV	On-Line at 150MW
GEN-2007-052	150.00	WFEC	Anadarko 138kV	On-Line
GEN-2007-062	765.00	OKGE	Woodward EHV 345kV	On Schedule for 2016 and 2017
GEN-2008-003	101.00	OKGE	Woodward EHV 138kV	On-Line
GEN-2008-013	300.00	OKGE	Hunter 345kV	On-Line at 235MW
GEN-2008-018	250.00	SPS	Finney 345kV	On-Line
GEN-2008-021	42.00	WERE	Wolf Creek 345kV	On-Line
GEN-2008-022	300.00	SPS	Tap Tolk - Eddy County (Crossroads) 345kV	On Schedule for 2015
GEN-2008-023	150.00	AEPW	Hobart Junction 138kV	On-Line
GEN-2008-037	101.00	WFEC	Tap Washita - Blue Canyon Wind 138kV	On-Line
GEN-2008-044	197.80	OKGE	Tatonga 345kV	On-Line
GEN-2008-047	300.00	OKGE	Beaver County 345kV	On-Line
GEN-2008-051	322.00	SPS	Potter County 345kV	On-Line at 161MW
GEN-2008-079	99.20	SUNCMKEC	Crooked Creek 115kV	On-Line
GEN-2008-086N02	201.00	NPPD	Meadow Grove 230kV	On-Line
GEN-2008-092	201.00	MIDW	Post Rock 230kV	On Schedule for 2015
GEN-2008-098	100.80	WERE	Waverly 345kV	On Schedule for 2015
GEN-2008-119O	60.00	OPPD	S1399 161kV	On-Line
GEN-2008-123N	89.70	NPPD	Tap Pauline - Hildreth (Rosemont) 115kV	On Schedule for 2015

Request	Amount	Area	Requested/Proposed Point of Interconnection	Status or In-Service Date
GEN-2008-124	200.10	SUNCMKEC	Ironwood 345kV	On Schedule for 2016
GEN-2008-129	80.00	GMO	Pleasant Hill 161kV	On-Line
GEN-2009-008	199.50	MIDW	South Hays 230kV	On Schedule for 2015
GEN-2009-020	48.30	MIDW	Tap Nekoma - Bazine (Walnut Creek) 69kV	On Schedule for 2015
GEN-2009-025	59.80	OKGE	Nardins 69kV	On-Line
GEN-2009-040	73.80	WERE	Marshall 115kV	On Schedule for 2016
GEN-2010-001	300.00	OKGE	Beaver County 345kV	On-Line at 204 MW, On Schedule for 2015 (96 MW)
GEN-2010-003	100.80	WERE	Waverly 345kV	On Schedule for 2015
GEN-2010-005	299.20	WERE	Viola 345kV	On-Line at 170MW
GEN-2010-006	205.00	SPS	Jones 230kV	On-Line
GEN-2010-009	165.60	SUNCMKEC	Buckner 345kV	On-Line
GEN-2010-011	29.70	OKGE	Tatonga 345kV	On-Line
GEN-2010-014	358.80	SPS	Hitchland 345kV	On Suspension
GEN-2010-036	4.60	WERE	6th Street 115kV	On-Line
GEN-2010-040	300.00	OKGE	Cimarron 345kV	On-Line
GEN-2010-041	10.50	OPPD	S1399 161kV	On Schedule for 2015
GEN-2010-045	197.80	SUNCMKEC	Buckner 345kV	On Schedule for 2017
GEN-2010-046	56.00	SPS	TUCO Interchange 230kV	On Schedule for 2016
GEN-2010-051	200.00	NPPD	Tap Twin Church - Hoskins 230kV	On Suspension
GEN-2010-055	4.50	AEPW	Wekiwa 138kV	On-Line
GEN-2010-057	201.00	MIDW	Rice County 230kV	On-Line
GEN-2011-008	600.00	SUNCMKEC	Clark County 345kV	On Schedule for 2016
GEN-2011-010	100.80	OKGE	Minco 345kV	On-Line
GEN-2011-011	50.00	KCPL	Iatan 345kV	On-Line
GEN-2011-014	201.00	OKGE	Tap Hitchland - Woodward Dbl Ckt (GEN-2011-014 Tap) 345kV	On Schedule for 2016
GEN-2011-016	200.10	SUNCMKEC	Spearville 345kV	Facility Study Stage
GEN-2011-017	299.00	SUNCMKEC	Tap Spearville - Post Rock (GEN-2011-017T) 345kV	On Schedule for 2018
GEN-2011-018	73.60	NPPD	Steele City 115kV	On-Line
GEN-2011-019	299.00	OKGE	Woodward 345kV	On Suspension
GEN-2011-020	299.00	OKGE	Woodward 345kV	On Suspension
GEN-2011-022	299.00	SPS	Hitchland 345kV	On Suspension
GEN-2011-025	80.00	SPS	Tap Floyd County - Crosby County 115kV	On Schedule for 2016
GEN-2011-027	120.00	NPPD	Tap Hoskins - Twin Church 230kV	On Suspension
GEN-2011-037	7.00	WFEC	Blue Canyon 5 138kV	On-Line
GEN-2011-040	111.00	OKGE	Carter County 138kV	On-Line
GEN-2011-045	205.00	SPS	Jones 230kV	On-Line
GEN-2011-046	27.00	SPS	Lopez 115kV	On-Line
GEN-2011-048	175.00	SPS	Mustang 230kV	On-Line
GEN-2011-049	250.70	OKGE	Border 345kV	On Schedule for 2016
GEN-2011-050	109.80	AEPW	Santa Fe Tap 138kV	On Schedule for 2016
GEN-2011-051	104.40	OKGE	Tap Woodward - Tatonga 345kV (GEN-2011-051 Tap)	On Suspension
GEN-2011-054	300.00	OKGE	Cimarron 345kV	On Schedule for 2015
GEN-2011-056	3.60	NPPD	Jeffrey 115kV	On-Line
GEN-2011-056A	3.60	NPPD	John 1 115kV	On-Line
GEN-2011-056B	4.50	NPPD	John 2 115kV	On-Line
GEN-2011-057	150.40	WERE	Creswell 138kV	On Schedule for 2015
GEN-2012-001	61.20	SPS	Cirrus Tap 230kV	On-Line
GEN-2012-004	41.40	OKGE	Carter County 138kV	On-Line

Request	Amount	Area	Requested/Proposed Point of Interconnection	Status or In-Service Date
GEN-2012-007	120.00	SUNCMKEC	Rubart 115kV	On-Line
GEN-2012-009	15.00	SPS	Mustang 230kV	On-Line
GEN-2012-010	15.00	SPS	Mustang 230kV	On-Line
GEN-2012-020	478.00	SPS	TUCO 230kV	On Schedule for 2016
GEN-2012-021	4.80	LES	Terry Bundy Generating Station 115kV	On-Line
GEN-2012-024	180.00	SUNCMKEC	Clark County 345kV	On Schedule for 2016
GEN-2012-027	136.00	AEPW	Shidler 138kV	On Suspension
GEN-2012-028	74.80	WFEC	Gotebo 69kV	On Schedule for 2015
GEN-2012-032	300.00	OKGE	Open Sky 345kV	On Schedule for 2015
GEN-2012-033	98.80	OKGE	Tap and Tie South 4th - Bunch Creek & Enid Tap - Fairmont (GEN-2012-033T) 138kV	On Schedule for 2015
GEN-2012-034	7.00	SPS	Mustang 230kV	On-Line
GEN-2012-035	7.00	SPS	Mustang 230kV	On-Line
GEN-2012-036	7.00	SPS	Mustang 230kV	On-Line
GEN-2012-037	203.00	SPS	TUCO 345kV	On-Line
GEN-2012-040	76.50	WFEC	Chilocco 138kV	On Suspension
GEN-2012-041	121.50	OKGE	Ranch Road 345kV	On-Line
GEN-2013-002	50.60	LES	Tap Sheldon - Folsom & Pleasant Hill (GEN-2013-002 Tap) 115kV CKT 2	On Schedule for 2016
GEN-2013-007	100.30	OKGE	Tap Prices Falls - Carter 138kV	On Schedule for 2015
GEN-2013-008	1.20	NPPD	Steele City 115kV	On-Line
GEN-2013-010	99.00	SUNCMKEC	Tap Spearville - Post Rock (North of GEN-2011-017 Tap) 345kV	Facility Study
GEN-2013-011	30.00	AEPW	Turk 138kV	On-Line
GEN-2013-012	147.00	OKGE	Redbud 345kV	On-Line
GEN-2013-014	25.50	NPPD	Tap Guide Rock - Pauline (Rosemont) 115kV	On Suspension
GEN-2013-016	203.00	SPS	TUCO 345kV	IA Pending
GEN-2013-019	73.60	LES	Tap Sheldon - Folsom & Pleasant Hill (GEN-2013-002 Tap) 115kV CKT 2	On Schedule for 2016
GEN-2013-022	25.00	SPS	Norton 115kV	On Schedule for 2016
GEN-2013-027	150.00	SPS	Tap Tolk - Yoakum 230kV	Facility Study
GEN-2013-028	559.50	GRDA	Tap N Tulsa - GRDA 1 345kV	On Schedule for 2017
GEN-2013-029	300.00	OKGE	Renfrow 345kV	On Schedule for 2016 (150MW) and 2016 (150MW)
GEN-2013-030	300.00	OKGE	Beaver County 345kV	On Schedule for 2016 (200MW) and 2017 (100MW)
GEN-2013-032	204.00	NPPD	Antelope 115kV	On Schedule for 2017
GEN-2013-033	28.00	MIDW	Goodman Energy Center 115kV	On Schedule for 2016
GEN-2014-001	200.60	WERE	Tap Wichita - Emporia Energy Center 345kV	IA Pending
GEN-2014-002	10.50	OKGE	Tatonga 345kV (GEN-2007-021 POI)	Facility Study Stage
GEN-2014-003	15.84	OKGE	Tatonga 345kV (GEN-2007-044 POI)	Facility Study Stage
GEN-2014-004	4.00	NPPD	Steele City 115kV (GEN-2011-018 POI)	Facility Study Stage
GEN-2014-005	5.70	OKGE	Minco 345kV (GEN-2011-010 POI)	On-Line
GEN-2014-012	225.00	SPS	Tap Hobbs Interchange - Andrews 230kV	IA Pending
GEN-2014-013	73.50	NPPD	Meadow Grove (GEN-2008-086N2 Sub) 230kV	On Schedule for 2015
GEN-2014-020	100.00	AEPW	Tuttle 138kV	Facility Study
GEN-2014-021	300.00	GMO	Tap Nebraska City - Mullin Creek 345kV	Facility Study
GEN-2014-025	2.40	MIDW	Tap Nekoma - Bazine (Walnut Creek) 69kV	Facility Study
GEN-2014-026	150.00	OKGE	Beaver County 345kV	Facility Study
GEN-2014-028	35.00	EMDE	Riverton 161kV	Facility Study
GEN-2014-031	35.80	NPPD	Meadow Grove 230kV	Facility Study
GEN-2014-032	10.20	NPPD	Meadow Grove 230kV	Facility Study

Request	Amount	Area	Requested/Proposed Point of Interconnection	Status or In-Service Date
GEN-2014-033	70.00	SPS	Chaves County 115kV	Facility Study
GEN-2014-034	70.00	SPS	Chaves County 115kV	Facility Study
GEN-2014-035	30.00	SPS	Chaves County 115kV	Facility Study
GEN-2014-039	73.40	NPPD	Friend 115kV	Facility Study
GEN-2014-040	320.00	SPS	Castro 115kV	IA Pending
GEN-2014-041	123.17	SUNCMKEC	Arnold 115kV	Facility Study
GEN-2014-047	40.00	SPS	Tap Tolk - Eddy County (Crossroads) 345kV	Facility Study
GEN-2014-049	200.00	SUNCMKEC	Thistle 345kV	Facility Study
GEN-2014-051	174.00	WERE	Jeffrey Energy Center 345kV	Facility Study
GEN-2014-053	80.00	SPS	Carlisle 230kV	Facility Study
GEN-2014-054	120.00	SPS	Carlisle 230kV	Facility Study
GEN-2014-056	250.00	OKGE	Minco 345kV	Facility Study
GEN-2014-057	250.00	AEPW	Tap Lawton - Sunnyside 345kV	IA Pending
GEN-2014-064	248.40	OKGE	Otter 138kV	IA Pending
GEN-2014-066	30.00	SPS	Norton 115kV	Facility Study
Gray County Wind (Montezuma)	110.00	SUNCMKEC	Gray County Tap 115kV	On-Line
Llano Estacado (White Deer)	80.00	SPS	Llano Wind 115kV	On-Line
NPPD Distributed (Broken Bow)	8.30	NPPD	Broken Bow 115kV	On-Line
NPPD Distributed (Buffalo County Solar)	10.00	NPPD	Kearney Northeast	On-Line
NPPD Distributed (Burt County Wind)	12.00	NPPD	Tekamah & Oakland 115kV	On-Line
NPPD Distributed (Burwell)	3.00	NPPD	Ord 115kV	On-Line
NPPD Distributed (Columbus Hydro)	45.00	NPPD	Columbus 115kV	On-Line
NPPD Distributed (North Platte - Lexington)	54.00	NPPD	Multiple: Jeffrey 115kV, John_1 115kV, John_2 115kV	On-Line
NPPD Distributed (Ord)	11.90	NPPD	Ord 115kV	On-Line
NPPD Distributed (Stuart)	2.10	NPPD	Ainsworth 115kV	On-Line
SPS Distributed (Dumas 19th St)	20.00	SPS	Dumas 19th Street 115kV	On-Line
SPS Distributed (Etter)	20.00	SPS	Etter 115kV	On-Line
SPS Distributed (Hopi)	10.00	SPS	Hopi 115kV	On-Line
SPS Distributed (Jal)	10.00	SPS	S Jal 115kV	On-Line
SPS Distributed (Lea Road)	10.00	SPS	Lea Road 115kV	On-Line
SPS Distributed (Monument)	10.00	SPS	Monument 115kV	On-Line
SPS Distributed (Moore E)	25.00	SPS	Moore East 115kV	On-Line
SPS Distributed (Ocotillo)	10.00	SPS	S_Jal 115kV	On-Line
SPS Distributed (Sherman)	20.00	SPS	Sherman 115kV	On-Line
SPS Distributed (Spearman)	10.00	SPS	Spearman 69kV	On-Line
SPS Distributed (TC-Texas County)	20.00	SPS	Texas County 115kV	On-Line
SPS Distributed (Yuma)	2.57	SPS	SP-Yuma 69kV	On-Line
Total:	**27,283.8**			

C: Study Groupings

See next page

C. Study Groups

GROUP 1: WOODWARD AREA			
Request	Capacity	Area	Proposed Point of Interconnection
GEN-2001-014	96.00	WFEC	Ft Supply 138kV
GEN-2001-037	100.00	OKGE	FPL Moreland Tap 138kV
GEN-2005-008	120.00	OKGE	Woodward 138kV
GEN-2006-024S	19.80	WFEC	Buffalo Bear Tap 69kV
GEN-2006-046	131.00	OKGE	Dewey 138kV
GEN-2007-021	201.00	OKGE	Tatonga 345kV
GEN-2007-043	200.00	OKGE	Minco 345kV
GEN-2007-044	300.00	OKGE	Tatonga 345kV
GEN-2007-050	170.00	OKGE	Woodward EHV 138kV
GEN-2007-062	765.00	OKGE	Woodward EHV 345kV
GEN-2008-003	101.00	OKGE	Woodward EHV 138kV
GEN-2008-044	197.80	OKGE	Tatonga 345kV
GEN-2010-011	29.70	OKGE	Tatonga 345kV
GEN-2010-040	300.00	OKGE	Cimarron 345kV
GEN-2011-010	100.80	OKGE	Minco 345kV
GEN-2011-019	299.00	OKGE	Woodward 345kV
GEN-2011-020	299.00	OKGE	Woodward 345kV
GEN-2011-051	104.40	OKGE	Tap Woodward - Tatonga 345kV (GEN-2011-051 Tap)
GEN-2011-054	300.00	OKGE	Cimarron 345kV
GEN-2014-002	10.50	OKGE	Tatonga 345kV (GEN-2007-021 POI)
GEN-2014-003	15.84	OKGE	Tatonga 345kV (GEN-2007-044 POI)
GEN-2014-005	5.70	OKGE	Minco 345kV (GEN-2011-010 POI)
GEN-2014-020	100.00	AEPW	Tuttle 138kV
GEN-2014-056	250.00	OKGE	Minco 345kV
PRIOR QUEUED SUBTOTAL	4,216.54		
GEN-2015-029	161.00	OKGE	Tatonga 345kV
CURRENT CLUSTER SUBTOTAL	161.00		
AREA TOTAL	4,377.54		

GROUP 2: HITCHLAND AREA

Request	Capacity	Area	Proposed Point of Interconnection
ASGI-2011-002	20.00	SPS	Herring 115kV
GEN-2002-008	240.00	SPS	Hitchland 345kV
GEN-2002-009	80.00	SPS	Hansford 115kV
GEN-2003-020	160.00	SPS	Martin 115kV
GEN-2006-020S	18.90	SPS	DWS Frisco 115kV
GEN-2006-044	370.00	SPS	Hitchland 345kV
GEN-2007-046	200.00	SPS	Hitchland 115kV
GEN-2008-047	300.00	OKGE	Beaver County 345kV
GEN-2010-001	300.00	OKGE	Beaver County 345kV
GEN-2010-014	358.80	SPS	Hitchland 345kV
GEN-2011-014	201.00	OKGE	Tap Hitchland - Woodward Dbl Ckt (GEN-2011-014 Tap) 345kV
GEN-2011-022	299.00	SPS	Hitchland 345kV
GEN-2013-030	300.00	OKGE	Beaver County 345kV
GEN-2014-026	150.00	OKGE	Beaver County 345kV
SPS Distributed (Dumas 19th St)	20.00	SPS	Dumas 19th Street 115kV
SPS Distributed (Etter)	20.00	SPS	Etter 115kV
SPS Distributed (Moore E)	25.00	SPS	Moore East 115kV
SPS Distributed (Sherman)	20.00	SPS	Sherman 115kV
SPS Distributed (Spearman)	10.00	SPS	Spearman 69kV
SPS Distributed (TC-Texas County)	20.00	SPS	Texas County 115kV
PRIOR QUEUED SUBTOTAL	**3,112.70**		
GEN-2014-037	200.00	SPS	Tap Hitchland - Beaver County Dbl Ckt (Optima) 345kV
GEN-2014-038	200.00	SPS	Tap Hitchland - Potter County 345kV
GEN-2015-006	150.00	OKGE	Beaver County 345kV
CURRENT CLUSTER SUBTOTAL	**550.00**		
AREA TOTAL	**3,662.70**		

GROUP 3: SPEARVILLE AREA

Request	Capacity	Area	Proposed Point of Interconnection
ASGI-2012-006	22.50	SUNCMKEC	Tap Hugoton - Rolla 69kV
GEN-2001-039A	105.00	SUNCMKEC	Shooting Star Tap 115kV
GEN-2002-025A	150.00	SUNCMKEC	Spearville 230kV
GEN-2004-014	154.50	SUNCMKEC	Spearville 230kV
GEN-2005-012	250.00	SUNCMKEC	Ironwood 345kV
GEN-2006-006	205.50	SUNCMKEC	Spearville 345kV
GEN-2006-021	101.00	SUNCMKEC	Flat Ridge Tap 138kV
GEN-2007-040	200.00	SUNCMKEC	Buckner 345kV
GEN-2008-018	250.00	SPS	Finney 345kV
GEN-2008-079	99.20	SUNCMKEC	Crooked Creek 115kV
GEN-2008-124	200.10	SUNCMKEC	Ironwood 345kV
GEN-2010-009	165.60	SUNCMKEC	Buckner 345kV
GEN-2010-045	197.80	SUNCMKEC	Buckner 345kV
GEN-2011-008	600.00	SUNCMKEC	Clark County 345kV
GEN-2011-016	200.10	SUNCMKEC	Spearville 345kV
GEN-2011-017	299.00	SUNCMKEC	Tap Spearville - Post Rock (GEN-2011-017T) 345kV
GEN-2012-007	120.00	SUNCMKEC	Rubart 115kV
GEN-2012-024	180.00	SUNCMKEC	Clark County 345kV
GEN-2013-010	99.00	SUNCMKEC	Tap Spearville - Post Rock (North of GEN-2011-017 Tap) 345kV
GEN-2014-049	200.00	SUNCMKEC	Thistle 345kV
Gray County Wind (Montezuma)	110.00	SUNCMKEC	Gray County Tap 115kV
PRIOR QUEUED SUBTOTAL	**3,909.30**		
ASGI-2015-001	6.13	SUNCMKEC	Ninnescah 115kV
GEN-2015-021	20.00	SUNCMKEC	Johnson Corner 115kV
GEN-2015-026	8.30	SUNCMKEC	Buckner 345kV
GEN-2015-027	4.94	SUNCMKEC	Crooked Creek 115kV
CURRENT CLUSTER SUBTOTAL	**39.37**		
AREA TOTAL	**3,948.67**		

GROUP 4: NORTHWEST KANSAS AREA

Request	Capacity	Area	Proposed Point of Interconnection
ASGI-2013-004	36.60	SUNCMKEC	Morris 115kV
GEN-2001-039M	100.00	SUNCMKEC	Central Plains Tap 115kV
GEN-2003-006A	200.00	SUNCMKEC	Elm Creek 230kV
GEN-2003-019	250.00	MIDW	Smoky Hills Tap 230kV
GEN-2006-031	75.00	MIDW	Knoll 115kV
GEN-2008-092	201.00	MIDW	Post Rock 230kV
GEN-2009-008	199.50	MIDW	South Hays 230kV
GEN-2009-020	48.30	MIDW	Tap Nekoma - Bazine (Walnut Creek) 69kV
GEN-2010-057	201.00	MIDW	Rice County 230kV
GEN-2013-033	28.00	MIDW	Goodman Energy Center 115kV
GEN-2014-025	2.40	MIDW	Tap Nekoma - Bazine (Walnut Creek) 69kV
GEN-2014-041	123.17	SUNCMKEC	Arnold 115kV
PRIOR QUEUED SUBTOTAL	**1,464.97**		
GEN-2010-048	70.00	MIDW	Tap Beach Station - Redline 115kV
GEN-2015-017	172.00	SUNCMKEC	Mingo 115kV
CURRENT CLUSTER SUBTOTAL	**242.00**		
AREA TOTAL	**1,706.97**		

GROUP 5: AMARILLO AREA

Request	Capacity	Area	Proposed Point of Interconnection
ASGI-2013-001	11.50	SPS	PanTex South 115kV
GEN-2002-022	240.00	SPS	Bushland 230kV
GEN-2008-051	322.00	SPS	Potter County 345kV
GEN-2014-040	320.00	SPS	Castro 115kV
Llano Estacado (White Deer)	80.00	SPS	Llano Wind 115kV
PRIOR QUEUED SUBTOTAL	**973.50**		
GEN-2014-068	203.00	SPS	Tap Deaf Smith - Plant X 230kV
CURRENT CLUSTER SUBTOTAL	**203.00**		
AREA TOTAL	**1,176.50**		

GROUP 6: SOUTH TEXAS PANHANDLE/NEW MEXICO AREA

Request	Capacity	Area	Proposed Point of Interconnection
ASGI-2010-010	42.20	SPS	Lovington 115kV
ASGI-2010-020	30.00	SPS	Tap LE-Tatum - LE-Crossroads 69kV
ASGI-2010-021	15.00	SPS	Tap LE-Saunders Tap - LE-Anderson 69kV
ASGI-2011-001	27.30	SPS	Lovington 115kV
ASGI-2011-003	10.00	SPS	Hendricks 115kV
ASGI-2011-004	20.00	SPS	Pleasant Hill 69kV
ASGI-2012-002	18.15	SPS	FE-Clovis Interchange 115kV
ASGI-2013-002	18.40	SPS	FE Tucumcari 115kV
ASGI-2013-003	18.40	SPS	FE Clovis 115kV
ASGI-2013-005	1.65	SPS	FE Clovis 115kV
ASGI-2013-006	2.00	SPS	SP-Erskine 115kV
ASGI-2014-001	2.50	SPS	SP-Erskine 115kV
ASGI-2014-002	49.60	SPS	Tap Tucumcari - Santa Rosa 115kV
ASGI-2014-005	10.00	SPS	Strata 69kV
ASGI-2014-008	10.00	SPS	South Loving 69kV
ASGI-2014-009	10.00	SPS	Wood Draw 115kV
ASGI-2014-010	10.00	SPS	Ochoa 115kV
ASGI-2014-012	10.00	SPS	Cooper Ranch 115kV
GEN-2001-033	180.00	SPS	San Juan Tap 230kV
GEN-2001-036	80.00	SPS	Norton 115kV
GEN-2006-018	170.00	SPS	TUCO Interchange 230kV
GEN-2006-026	502.00	SPS	Hobbs 230kV & Hobbs 115kV
GEN-2008-022	300.00	SPS	Tap Tolk - Eddy County (Crossroads) 345kV
GEN-2010-006	205.00	SPS	Jones 230kV
GEN-2010-046	56.00	SPS	TUCO Interchange 230kV
GEN-2011-025	80.00	SPS	Tap Floyd County - Crosby County 115kV
GEN-2011-045	205.00	SPS	Jones 230kV
GEN-2011-046	27.00	SPS	Lopez 115kV
GEN-2011-048	175.00	SPS	Mustang 230kV
GEN-2012-001	61.20	SPS	Cirrus Tap 230kV
GEN-2012-009	15.00	SPS	Mustang 230kV
GEN-2012-010	15.00	SPS	Mustang 230kV
GEN-2012-020	478.00	SPS	TUCO 230kV
GEN-2012-034	7.00	SPS	Mustang 230kV
GEN-2012-035	7.00	SPS	Mustang 230kV
GEN-2012-036	7.00	SPS	Mustang 230kV
GEN-2012-037	203.00	SPS	TUCO 345kV
GEN-2013-016	203.00	SPS	TUCO 345kV
GEN-2013-022	25.00	SPS	Norton 115kV
GEN-2013-027	150.00	SPS	Tap Tolk - Yoakum 230kV
GEN-2014-012	225.00	SPS	Tap Hobbs Interchange - Andrews 230kV
GEN-2014-033	70.00	SPS	Chaves County 115kV
GEN-2014-034	70.00	SPS	Chaves County 115kV
GEN-2014-035	30.00	SPS	Chaves County 115kV
GEN-2014-047	40.00	SPS	Tap Tolk - Eddy County (Crossroads) 345kV
GEN-2014-053	80.00	SPS	Carlisle 230kV
GEN-2014-054	120.00	SPS	Carlisle 230kV
GEN-2014-066	30.00	SPS	Norton 115kV
SPS Distributed (Hopi)	10.00	SPS	Hopi 115kV
SPS Distributed (Jal)	10.00	SPS	S Jal 115kV

SPS Distributed (Lea Road)	10.00	SPS	Lea Road 115kV
SPS Distributed (Monument)	10.00	SPS	Monument 115kV
SPS Distributed (Ocotillo)	10.00	SPS	S_Jal 115kV
SPS Distributed (Yuma)	2.57	SPS	SP-Yuma 69kV
PRIOR QUEUED SUBTOTAL	**4,173.97**		
ASGI-2015-002	2.00	SPS	SP-Yuma 69kV
ASGI-2015-003	30.00	SPS	Tap San Jon Tap - Wheatland 115/69kV
GEN-2014-046	125.40	SPS	Chaves County 115kV
GEN-2014-065	99.00	SPS	Whitten 115kV
GEN-2014-074	152.00	SPS	Tap TUCO Interchange - Oklaunion 345kV
GEN-2015-009	300.00	SPS	Hobbs 230kV
GEN-2015-010	250.70	SPS	Tap South Roosvelt - Tolk 230kV
GEN-2015-014	150.00	SPS	Tap Cochran - Lehman 115kV
GEN-2015-018	80.00	SPS	Tap Curry County - Bailey 115kV
GEN-2015-020	99.96	SPS	Oasis 115kV
GEN-2015-022	112.00	SPS	Swisher 115kV
CURRENT CLUSTER SUBTOTAL	**1,401.06**		
AREA TOTAL	**5,575.03**		

GROUP 7: SOUTHWEST OKLAHOMA AREA

Request	Capacity	Area	Proposed Point of Interconnection
GEN-2001-026	74.30	WFEC	Washita 138kV
GEN-2002-005	120.00	WFEC	Red Hills Tap 138kV
GEN-2003-004	100.00	WFEC	Washita 138kV
GEN-2003-005	100.00	WFEC	Anadarko - Paradise (Blue Canyon) 138kV
GEN-2003-022	120.00	AEPW	Washita 138kV
GEN-2004-020	27.00	AEPW	Washita 138kV
GEN-2004-023	20.60	WFEC	Washita 138kV
GEN-2005-003	30.60	WFEC	Washita 138kV
GEN-2006-002	101.00	AEPW	Sweetwater 230kV
GEN-2006-035	225.00	AEPW	Sweetwater 230kV
GEN-2006-043	99.00	AEPW	Sweetwater 230kV
GEN-2007-032	150.00	WFEC	Tap Clinton Junction - Clinton 138kV
GEN-2007-052	150.00	WFEC	Anadarko 138kV
GEN-2008-023	150.00	AEPW	Hobart Junction 138kV
GEN-2008-037	101.00	WFEC	Tap Washita - Blue Canyon Wind 138kV
GEN-2011-037	7.00	WFEC	Blue Canyon 5 138kV
GEN-2011-049	250.70	OKGE	Border 345kV
GEN-2012-028	74.80	WFEC	Gotebo 69kV
PRIOR QUEUED SUBTOTAL	**1,901.00**		
GEN-2015-004	52.90	OKGE	Border 345kV
GEN-2015-013	120.00	WFEC	Synder 138kV
CURRENT CLUSTER SUBTOTAL	**172.90**		
AREA TOTAL	**2,073.90**		

GROUP 8: NORTH OKLAHOMA/SOUTH CENTRAL KANSAS AREA

Request	Capacity	Area	Proposed Point of Interconnection
ASGI-2010-006	150.00	AECI	Tap Fairfax (AECI) - Shilder (AEPW) 138kV
ASGI-2014-014	56.40	GRDA	Ferguson 69kV
GEN-2002-004	200.00	WERE	Latham 345kV
GEN-2005-013	201.00	WERE	Caney River 345kV
GEN-2007-025	300.00	WERE	Viola 345kV
GEN-2008-013	300.00	OKGE	Hunter 345kV
GEN-2008-021	42.00	WERE	Wolf Creek 345kV
GEN-2008-098	100.80	WERE	Waverly 345kV
GEN-2009-025	59.80	OKGE	Nardins 69kV
GEN-2010-003	100.80	WERE	Waverly 345kV
GEN-2010-005	299.20	WERE	Viola 345kV
GEN-2010-055	4.50	AEPW	Wekiwa 138kV
GEN-2011-057	150.40	WERE	Creswell 138kV
GEN-2012-027	136.00	AEPW	Shidler 138kV
GEN-2012-032	300.00	OKGE	Open Sky 345kV
GEN-2012-033	98.80	OKGE	Tap and Tie South 4th - Bunch Creek & Enid Tap - Fairmont (GEN-2012-033T) 138kV
GEN-2012-040	76.50	WFEC	Chilocco 138kV
GEN-2012-041	121.50	OKGE	Ranch Road 345kV
GEN-2013-012	147.00	OKGE	Redbud 345kV
GEN-2013-028	559.50	GRDA	Tap N Tulsa - GRDA 1 345kV
GEN-2013-029	300.00	OKGE	Renfrow 345kV
GEN-2014-001	200.60	WERE	Tap Wichita - Emporia Energy Center 345kV
GEN-2014-028	35.00	EMDE	Riverton 161kV
GEN-2014-064	248.40	OKGE	Otter 138kV

PRIOR QUEUED SUBTOTAL	4,188.20		
ASGI-2015-004	56.36	GRDA	Coffeyville City 69kV
GEN-2015-001	200.00	OKGE	Ranch Road 345kV
GEN-2015-003	200.00	OKGE	Renfrow 345kV
GEN-2015-015	154.60	OKGE	Tap Medford Tap - Coyote 138kV
GEN-2015-016	200.00	KCPL	Tap Marmaton - Centerville 161kV
GEN-2015-024	220.00	WERE	Tap Thistle - Wichita 345kV Dbl CKT
GEN-2015-025	220.00	WERE	Tap Thistle - Wichita 345kV Dbl CKT
GEN-2015-028	3.00	OKGE	Nardins 69kV
GEN-2015-030	200.10	OKGE	Sooner 345kV
CURRENT CLUSTER SUBTOTAL	1,454.06		
AREA TOTAL	5,642.26		

GROUP 9: NEBRASKA AREA

Request	Capacity	Area	Proposed Point of Interconnection
GEN-2002-023N	0.80	NPPD	Harmony 115kV
GEN-2003-021N	75.00	NPPD	Ainsworth Wind Tap 115kV
GEN-2004-023N	75.00	NPPD	Columbus Co 115kV
GEN-2006-020N	42.00	NPPD	Bloomfield 115kV
GEN-2006-037N1	75.00	NPPD	Broken Bow 115kV
GEN-2006-038N005	80.00	NPPD	Broken Bow 115kV
GEN-2006-038N019	80.00	NPPD	Petersburg North 115kV
GEN-2006-044N	40.50	NPPD	North Petersburg 115kV
GEN-2007-011N08	81.00	NPPD	Bloomfield 115kV
GEN-2008-086N02	201.00	NPPD	Meadow Grove 230kV
GEN-2008-119O	60.00	OPPD	S1399 161kV
GEN-2008-123N	89.70	NPPD	Tap Pauline - Hildreth (Rosemont) 115kV
GEN-2009-040	73.80	WERE	Marshall 115kV
GEN-2010-041	10.50	OPPD	S1399 161kV
GEN-2010-051	200.00	NPPD	Tap Twin Church - Hoskins 230kV
GEN-2011-018	73.60	NPPD	Steele City 115kV
GEN-2011-027	120.00	NPPD	Tap Hoskins - Twin Church 230kV
GEN-2011-056	3.60	NPPD	Jeffrey 115kV
GEN-2011-056A	3.60	NPPD	John 1 115kV
GEN-2011-056B	4.50	NPPD	John 2 115kV
GEN-2012-021	4.80	LES	Terry Bundy Generating Station 115kV
GEN-2013-002	50.60	LES	Tap Sheldon - Folsom & Pleasant Hill (GEN-2013-002 Tap) 115kV CKT 2
GEN-2013-008	1.20	NPPD	Steele City 115kV
GEN-2013-014	25.50	NPPD	Tap Guide Rock - Pauline (Rosemont) 115kV
GEN-2013-019	73.60	LES	Tap Sheldon - Folsom & Pleasant Hill (GEN-2013-002 Tap) 115kV CKT 2
GEN-2013-032	204.00	NPPD	Antelope 115kV
GEN-2014-004	4.00	NPPD	Steele City 115kV (GEN-2011-018 POI)
GEN-2014-013	73.50	NPPD	Meadow Grove (GEN-2008-086N2 Sub) 230kV
GEN-2014-031	35.80	NPPD	Meadow Grove 230kV
GEN-2014-032	10.20	NPPD	Meadow Grove 230kV
GEN-2014-039	73.40	NPPD	Friend 115kV
NPPD Distributed (Broken Bow)	8.30	NPPD	Broken Bow 115kV
NPPD Distributed (Buffalo County Solar)	10.00	NPPD	Kearney Northeast
NPPD Distributed (Burt County Wind)	12.00	NPPD	Tekamah & Oakland 115kV
NPPD Distributed (Burwell)	3.00	NPPD	Ord 115kV
NPPD Distributed (Columbus Hydro)	45.00	NPPD	Columbus 115kV
NPPD Distributed (North Platte - Lexington)	54.00	NPPD	Multiple: Jeffrey 115kV, John_1 115kV, John_2 115kV

NPPD Distributed (Ord)	11.90	NPPD	Ord 115kV
NPPD Distributed (Stuart)	2.10	NPPD	Ainsworth 115kV
PRIOR QUEUED SUBTOTAL	**2,092.50**		
GEN-2014-023	79.90	NPPD	Tap Fort Randall - Meadow Grove 230kV
GEN-2014-059	160.00	NPPD	Tap Sidney - Ogallala 230kV
GEN-2014-060	125.80	NPPD	Tap Pauline - Hildreth (Rosemont) 115kV
GEN-2015-007	160.00	NPPD	Hoskins 345kV
GEN-2015-008	150.40	NPPD	Antelope 115kV
GEN-2015-023	300.70	NPPD	Holt County 345kV
CURRENT CLUSTER SUBTOTAL	**976.80**		
AREA TOTAL	**3,069.30**		

GROUP 10: SOUTHEAST OKLAHOMA/NORTHEAST TEXAS AREA

Request	Capacity	Area	Proposed Point of Interconnection
AREA TOTAL	0.00		

GROUP 12: NORTHWEST ARKANSAS AREA

Request	Capacity	Area	Proposed Point of Interconnection
GEN-2013-011	30.00	AEPW	Turk 138kV
PRIOR QUEUED SUBTOTAL	30.00		
GEN-2015-019	60.00	AEPW	Fitzhugh 161kV
CURRENT CLUSTER SUBTOTAL	60.00		
AREA TOTAL	90.00		

GROUP 13: NORTHWEST MISSOURI AREA

Request	Capacity	Area	Proposed Point of Interconnection
GEN-2008-129	80.00	GMO	Pleasant Hill 161kV
GEN-2010-036	4.60	WERE	6th Street 115kV
GEN-2011-011	50.00	KCPL	Iatan 345kV
GEN-2014-021	300.00	GMO	Tap Nebraska City - Mullin Creek 345kV
GEN-2014-051	174.00	WERE	Jeffrey Energy Center 345kV
PRIOR QUEUED SUBTOTAL	608.60		
GEN-2015-005	200.10	GMO	Tap Nebraska City - Sibley 345kV
CURRENT CLUSTER SUBTOTAL	200.10		
AREA TOTAL	808.70		

GROUP 14: SOUTH CENTRAL OKLAHOMA AREA

Request	Capacity	Area	Proposed Point of Interconnection
GEN-2011-040	111.00	OKGE	Carter County 138kV
GEN-2011-050	109.80	AEPW	Santa Fe Tap 138kV
GEN-2012-004	41.40	OKGE	Carter County 138kV
GEN-2013-007	100.30	OKGE	Tap Prices Falls - Carter 138kV
GEN-2014-057	250.00	AEPW	Tap Lawton - Sunnyside 345kV
PRIOR QUEUED SUBTOTAL	612.50		
AREA TOTAL	612.50		

CLUSTER TOTAL (CURRENT STUDY)	5,460.3	MW
PQ TOTAL (PRIOR QUEUED)	27,283.8	MW
CLUSTER TOTAL (INCLUDING PRIOR QUEUED)	32,744.1	MW

D: Proposed Point of Interconnection One Line Diagrams

See next page

*Note: If not denoted otherwise for Affected System Generator Interconnection Requests (ASGI) interconnection cost estimate could include distribution system or third party system network upgrades and costs estimates.

ASGI-2015-001
Estimated Cluster Analysis Interconnection Cost: $3,188,259
Estimated Stand Alone Analysis Interconnection Cost: $3,188,259

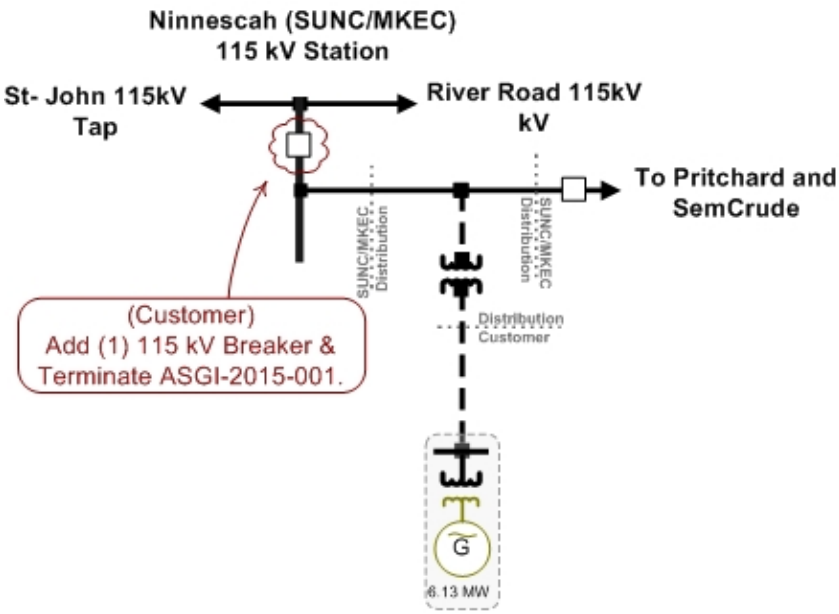

ASGI-2015-001

*** Interconnection Cost Estimate(s) only include Affected System Interconnection costs**

ASGI-2015-002
Estimated Cluster Analysis Interconnection Cost: $0*
Estimated Stand Alone Analysis Interconnection Cost: $0*

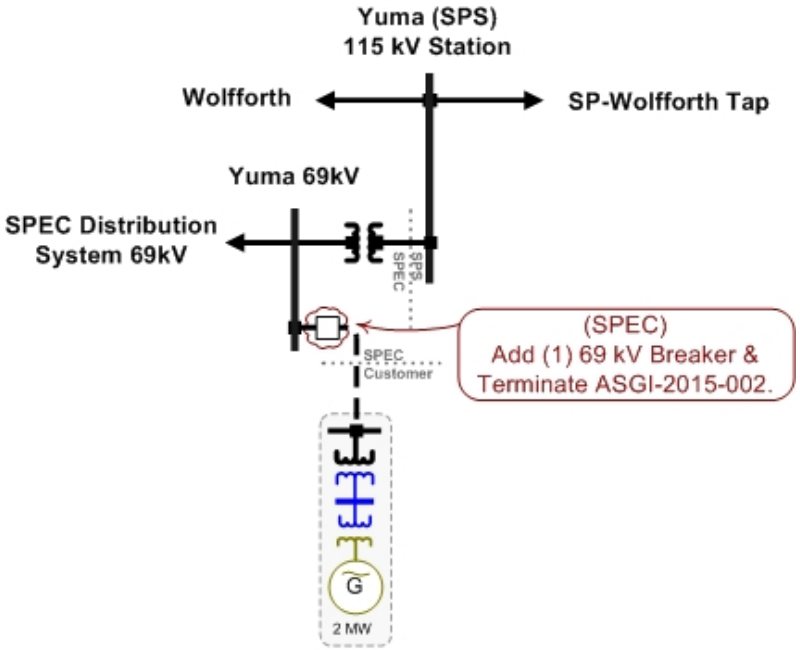

ASGI-2015-002

*** Interconnection Cost Estimate(s) only include Affected System Interconnection costs**

ASGI-2015-003
Estimated Cluster Analysis Interconnection Cost: $0*
Estimated Stand Alone Analysis Interconnection Cost: $0*

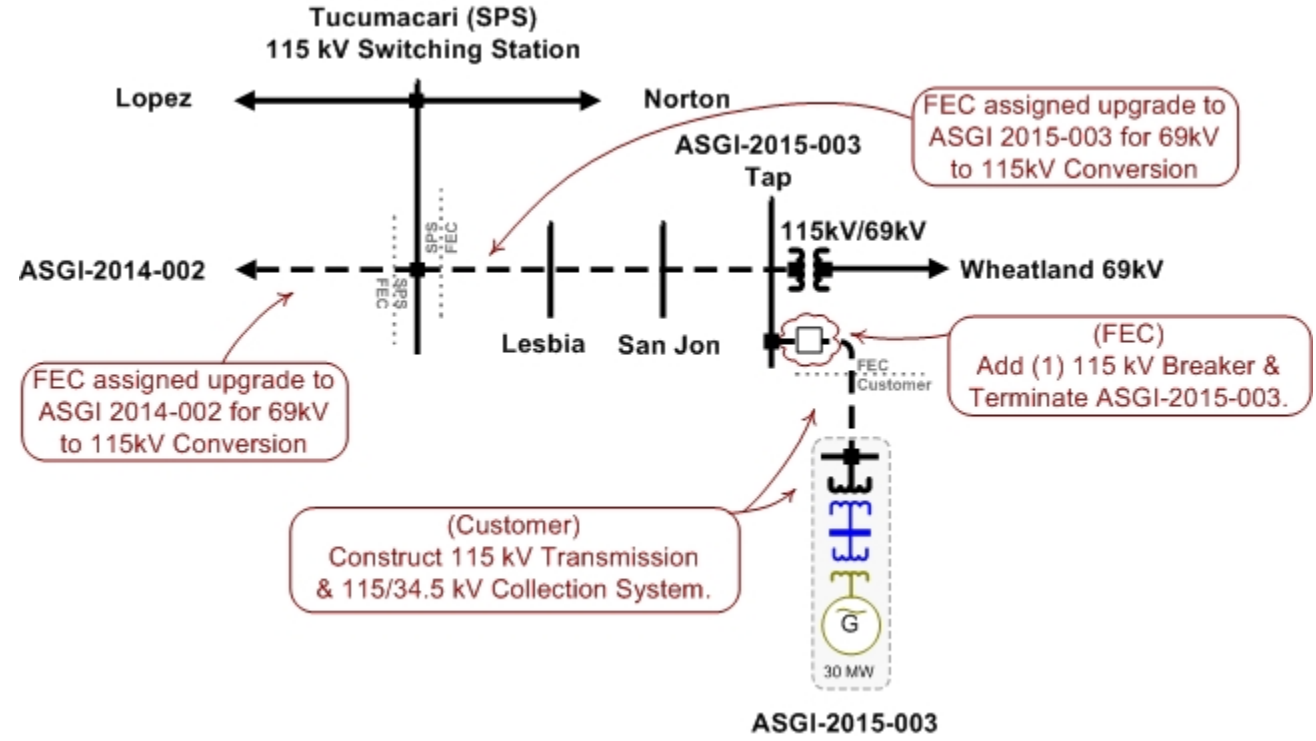

*** Interconnection Cost Estimate(s) only include Affected System Interconnection costs**

ASGI-2015-004
Estimated Cluster Analysis Interconnection Cost: $ 0*
Estimated Stand Alone Analysis Interconnection Cost: $ 0*

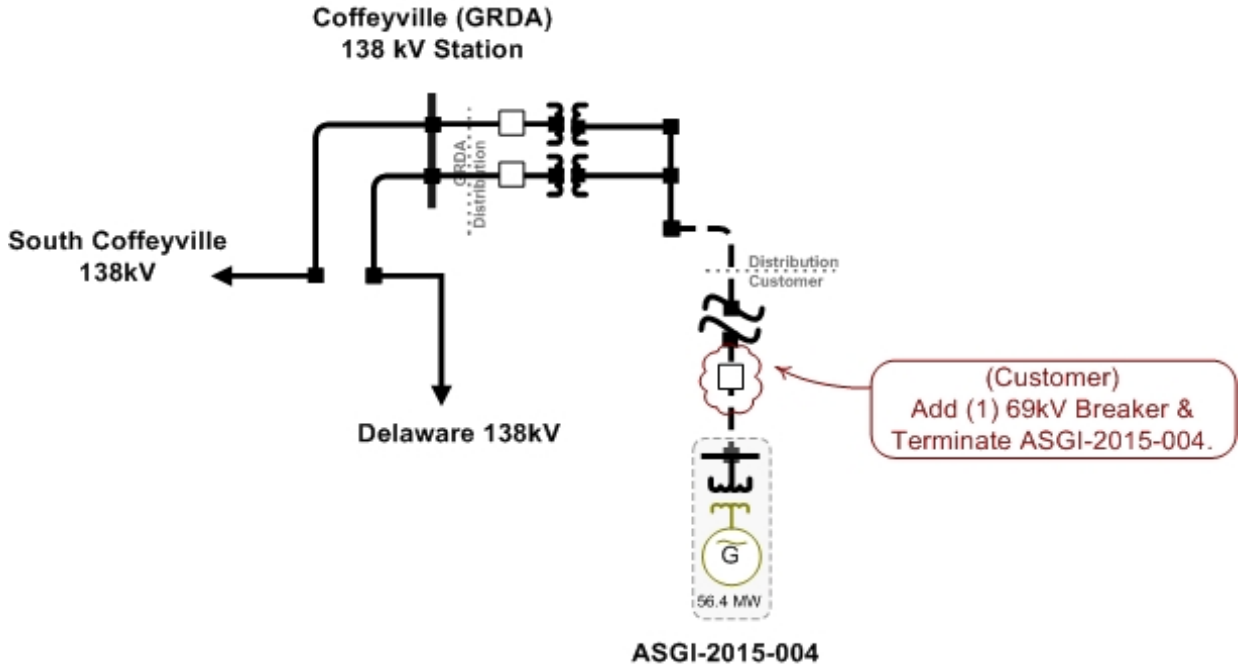

*** Interconnection Cost Estimate(s) only include Affected System Interconnection costs**

GEN-2010-048
Estimated Cluster Analysis Interconnection Cost: $4,000,000
Estimated Stand Alone Analysis Interconnection Cost: $4,000,000

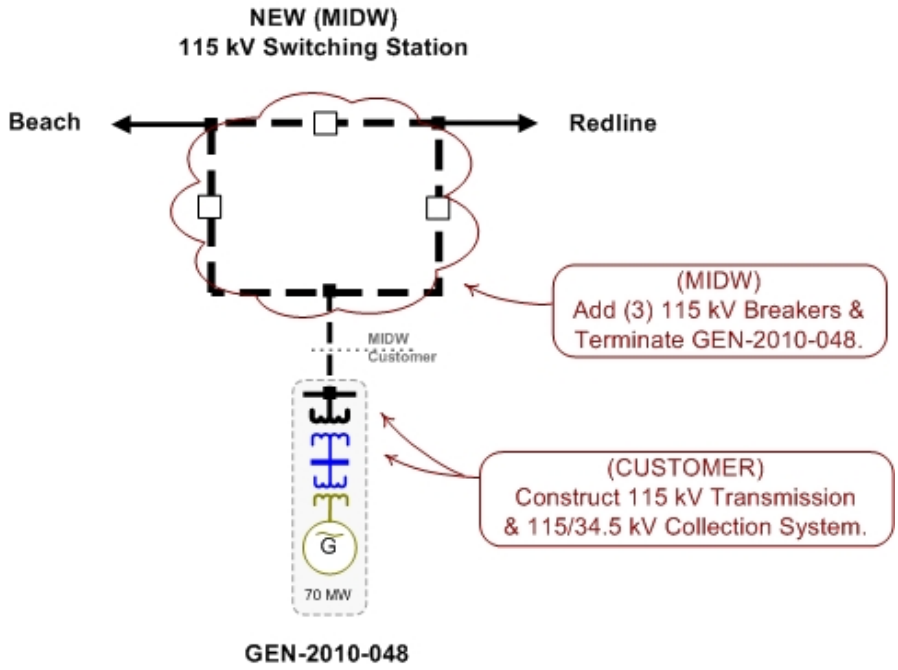

GEN-2014-023
Estimated Cluster Analysis Interconnection Cost: $9,200,000
Estimated Stand Alone Analysis Interconnection Cost: $9,200,000

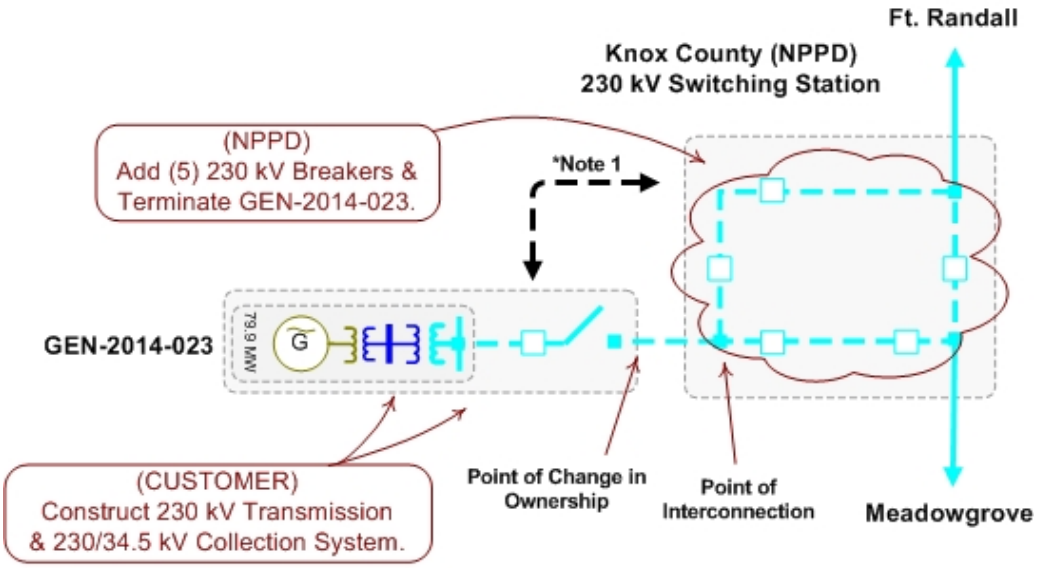

*Note 1: Breaker status & control signal to Transmission Owner to allow operation by Transmission Owner of 230kV breaker during Emergency Condition. Breaker operation will need coordination to ensure safe operation of the transmission line.

GEN-2014-037
Estimated Cluster Analysis Interconnection Cost: $20,339,743
Estimated Stand Alone Analysis Interconnection Cost: $20,339,743

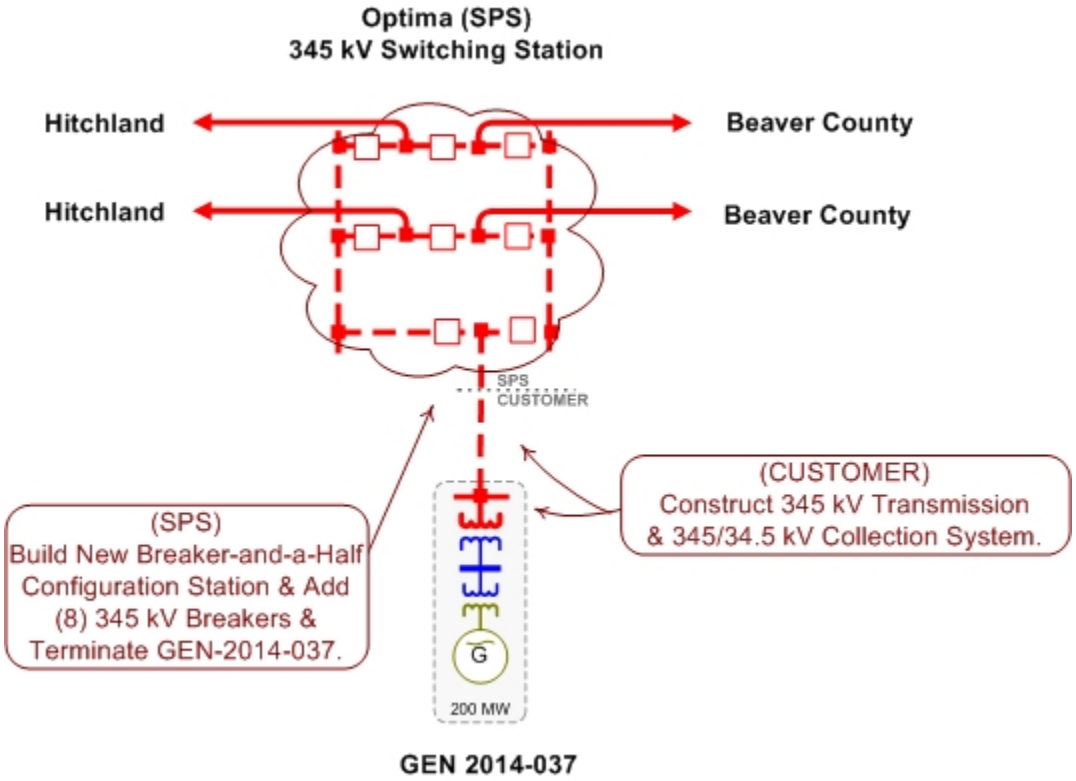

GEN-2014-038
Estimated Cluster Analysis Interconnection Cost: $12,542,886
Estimated Stand Alone Analysis Interconnection Cost: $12,542,886

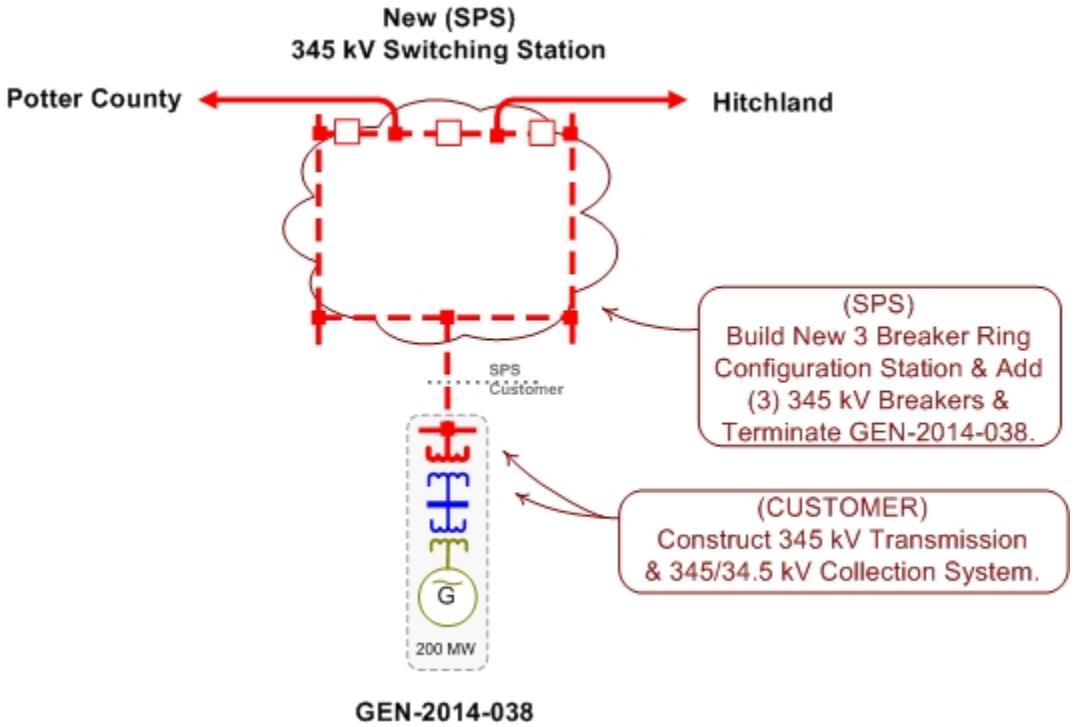

GEN-2014-046
Estimated Cluster Analysis Interconnection Cost: $1,016,368
Estimated Stand Alone Analysis Interconnection Cost: $1,016,368

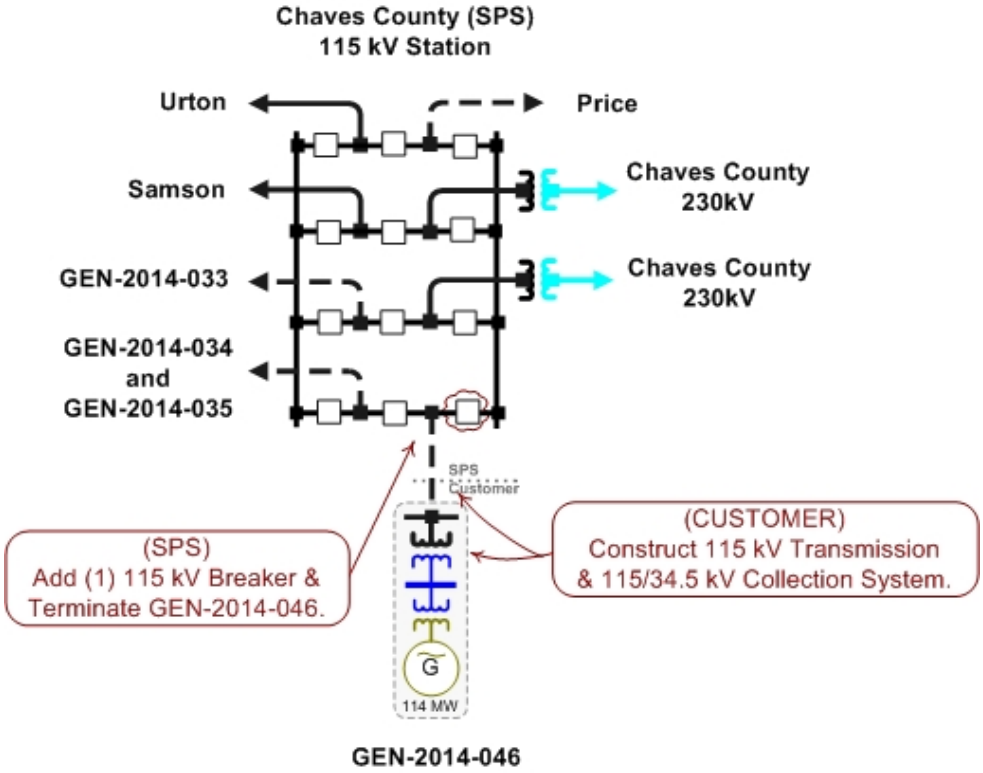

GEN-2014-059
Estimated Cluster Analysis Interconnection Cost: $9,200,000
Estimated Stand Alone Analysis Interconnection Cost: $9,200,000

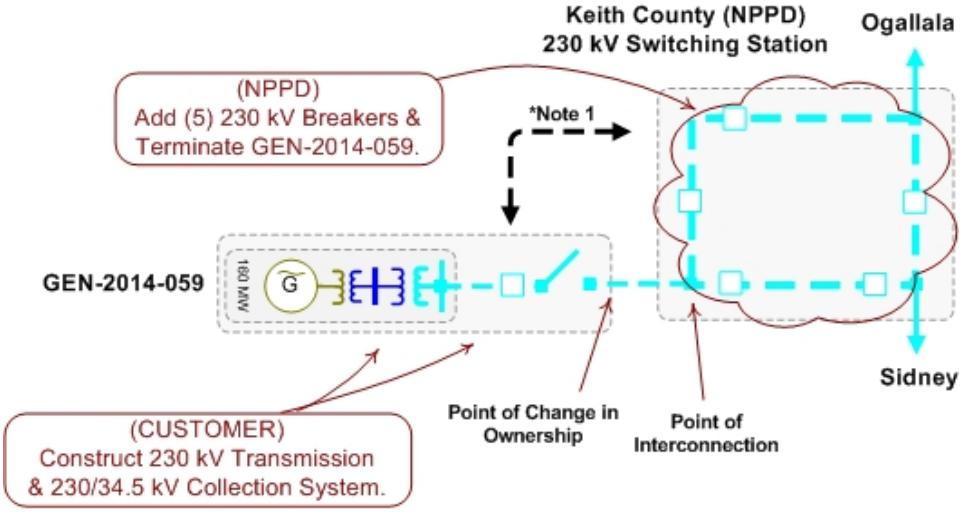

*Note 1: Breaker status & control signal to Transmission Owner to allow operation by Transmission Owner of 230kV breaker during Emergency Condition. Breaker operation will need coordination to ensure safe operation of the transmission line.

GEN-2014-060
Estimated Cluster Analysis Interconnection Cost: $6,300,000
Estimated Stand Alone Analysis Interconnection Cost: $6,300,000

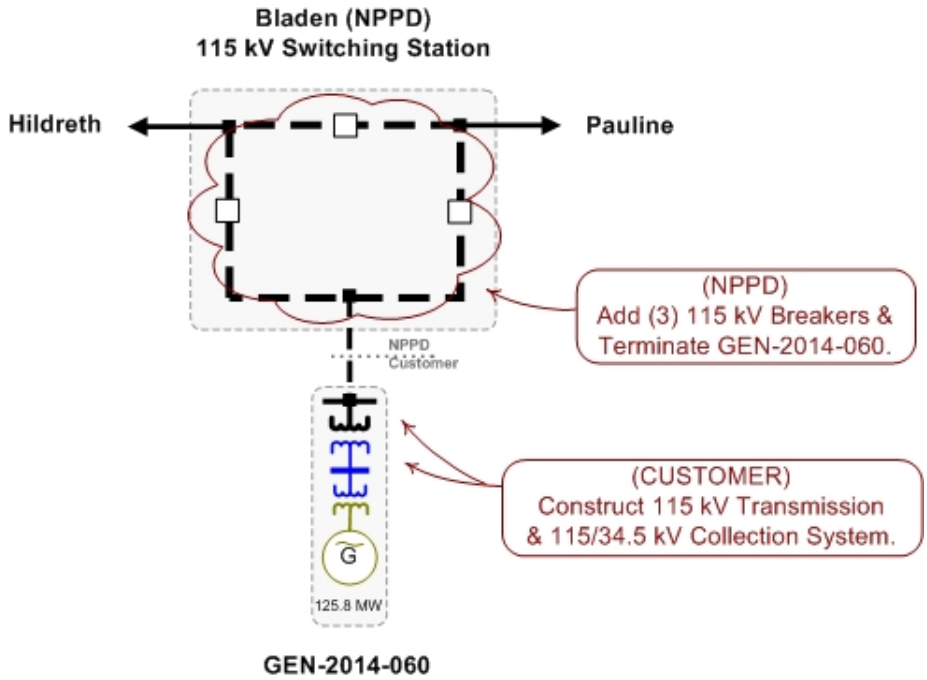

GEN-2014-065
Estimated Cluster Analysis Interconnection Cost: $7,542,402
Estimated Stand Alone Analysis Interconnection Cost: $7,542,402

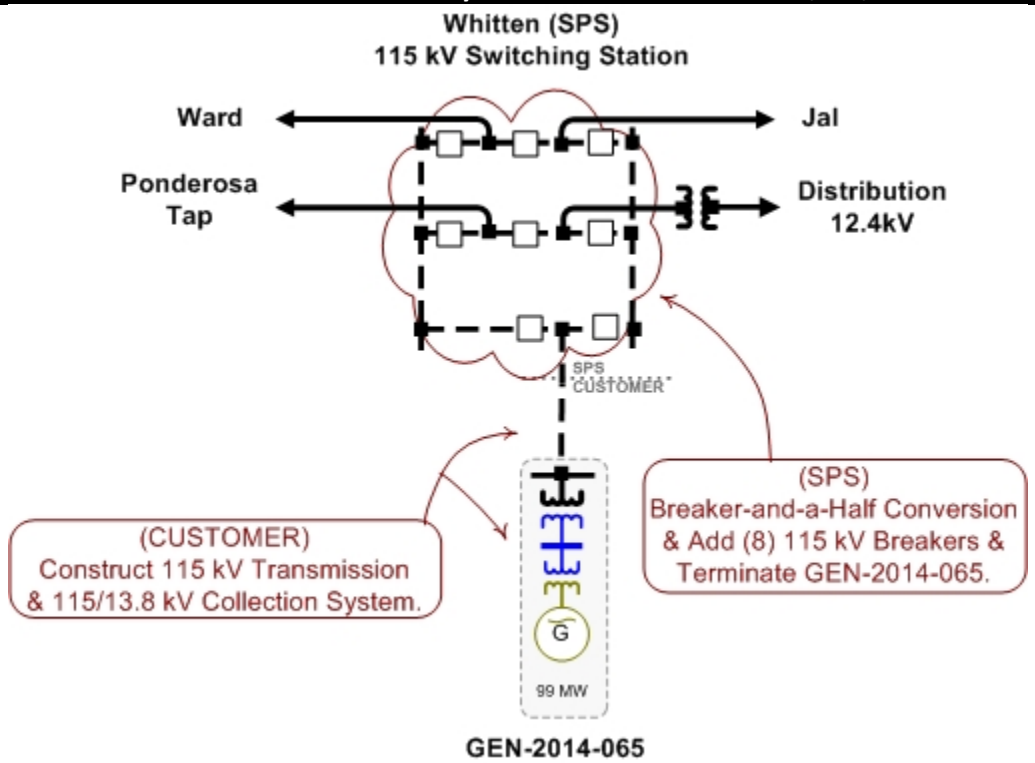

GEN-2014-068
Estimated Cluster Analysis Interconnection Cost: $8,346,514
Estimated Stand Alone Analysis Interconnection Cost: $8,346,514

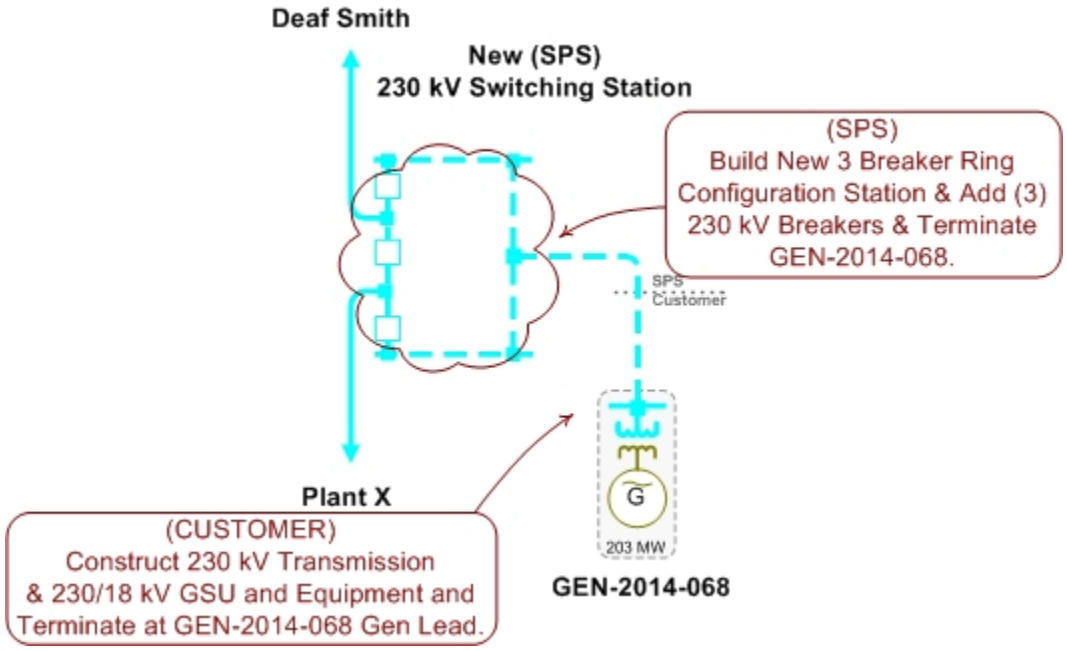

GEN-2014-074
Estimated Cluster Analysis Interconnection Cost: $13,519,992
Estimated Stand Alone Analysis Interconnection Cost: $13,519,992

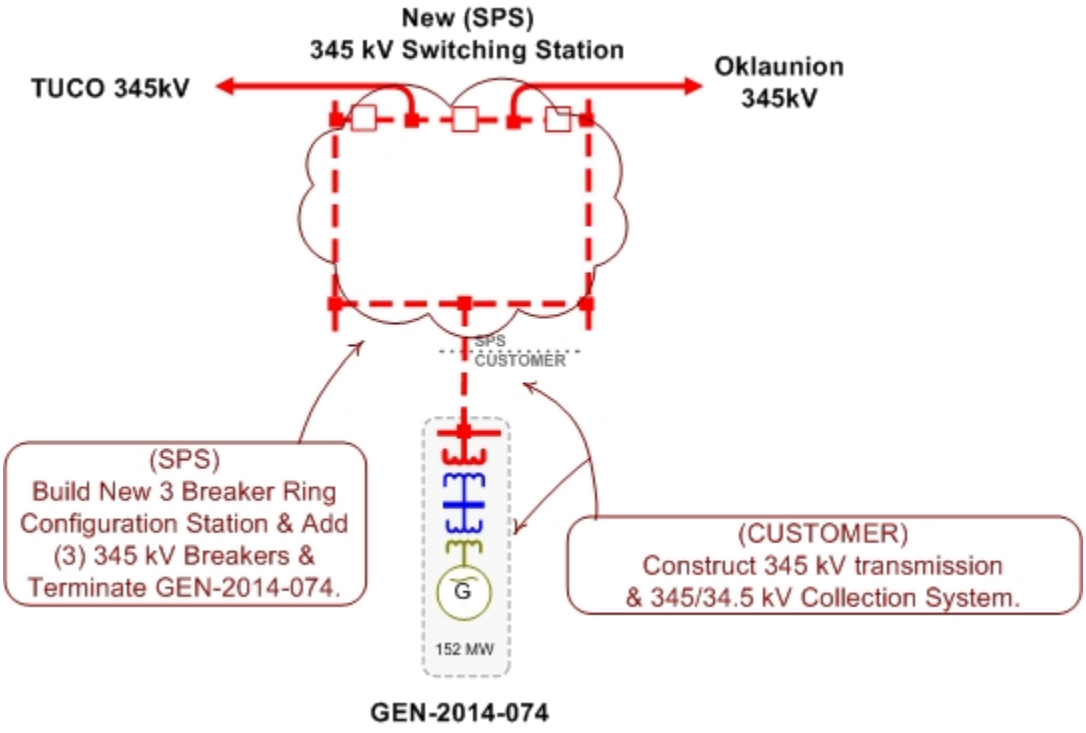

GEN-2015-001
Estimated Cluster Analysis Interconnection Cost: $2,250,100
Estimated Stand Alone Analysis Interconnection Cost: $2,250,100

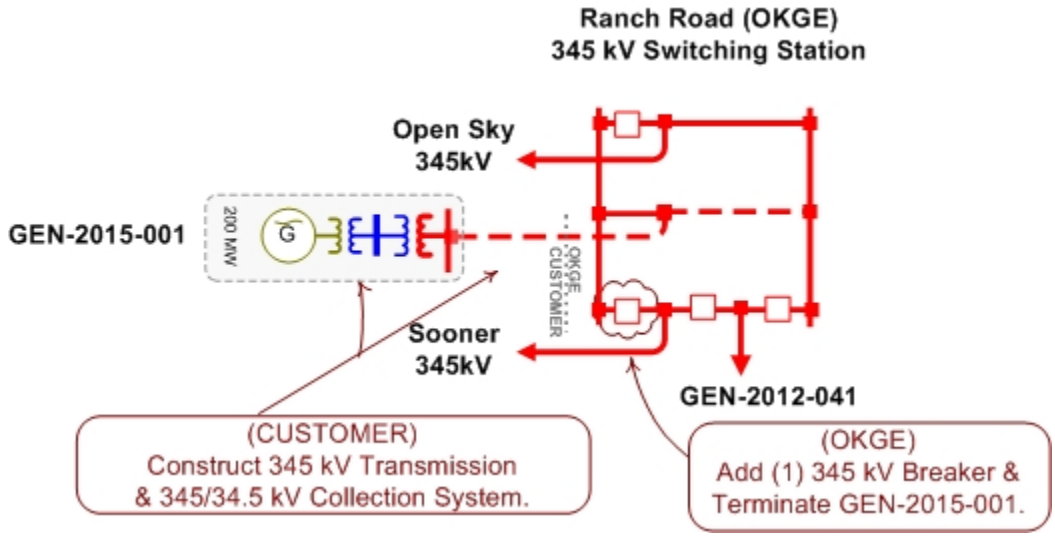

GEN-2015-003
Estimated Cluster Analysis Interconnection Cost: $2,250,100
Estimated Stand Alone Analysis Interconnection Cost: $2,250,100

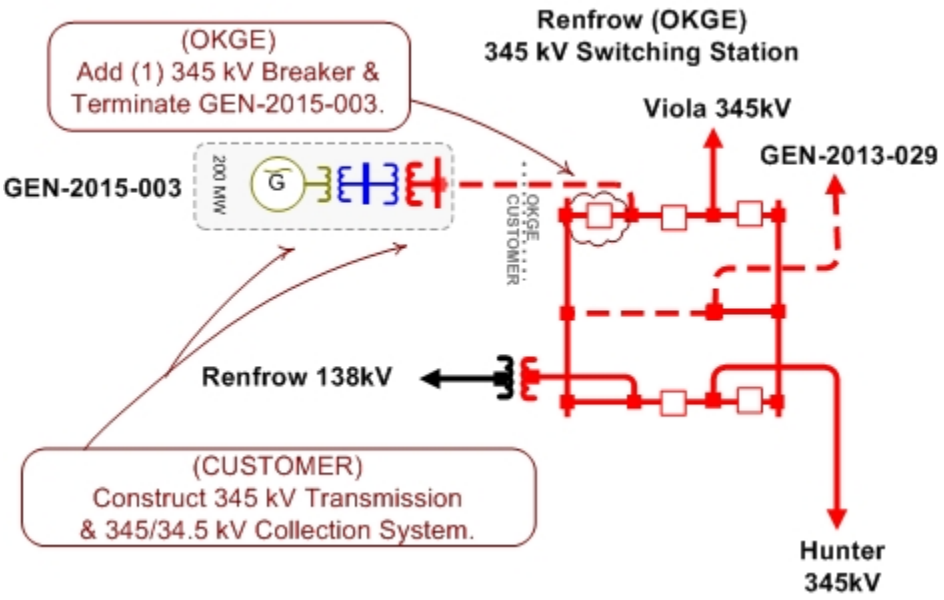

GEN-2015-004
Estimated Cluster Analysis Interconnection Cost: $0
Estimated Stand Alone Analysis Interconnection Cost: $0

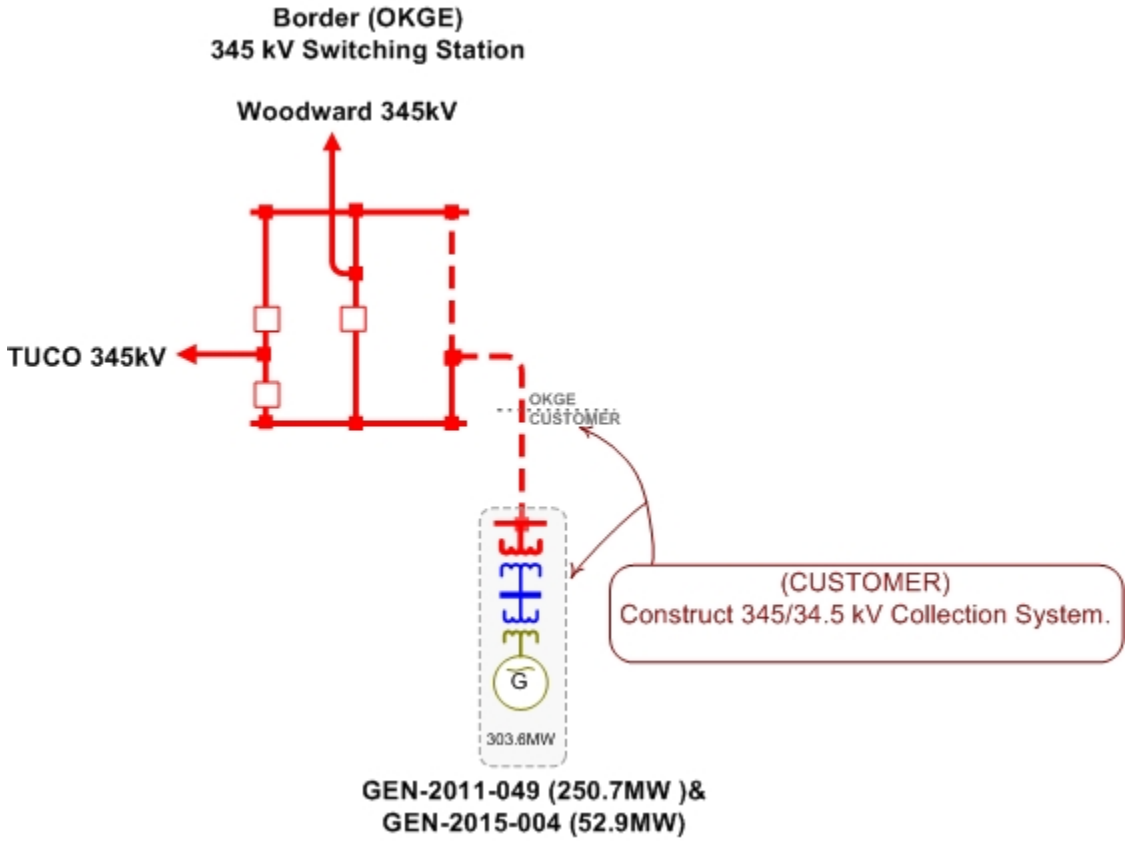

GEN-2015-005
Estimated Cluster Analysis Interconnection Cost: $18,262,000
Estimated Stand Alone Analysis Interconnection Cost: $18,262,000

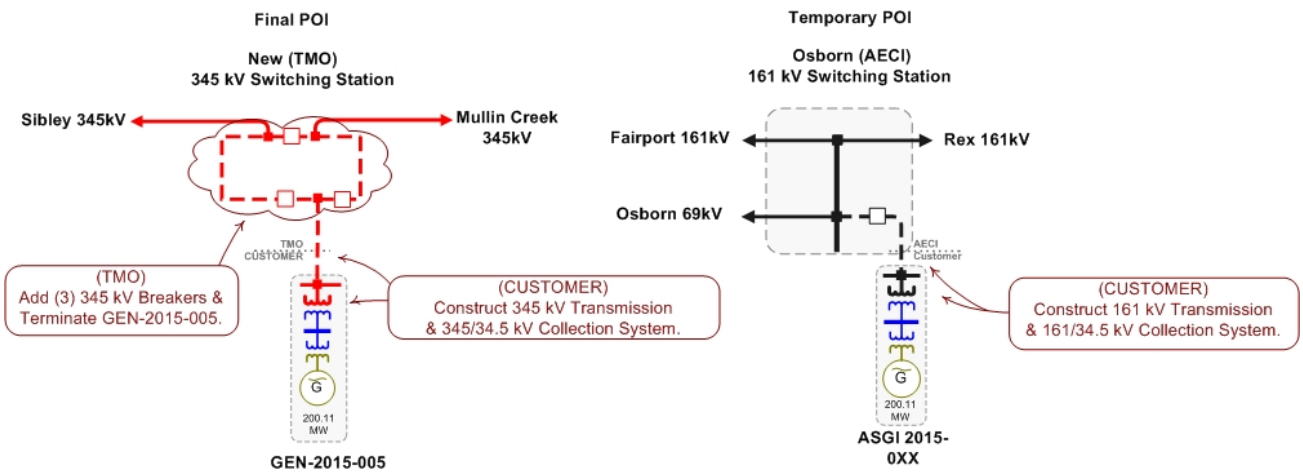

GEN-2015-006
Estimated Cluster Analysis Interconnection Cost: $2,270,100
Estimated Stand Alone Analysis Interconnection Cost: $2,270,100

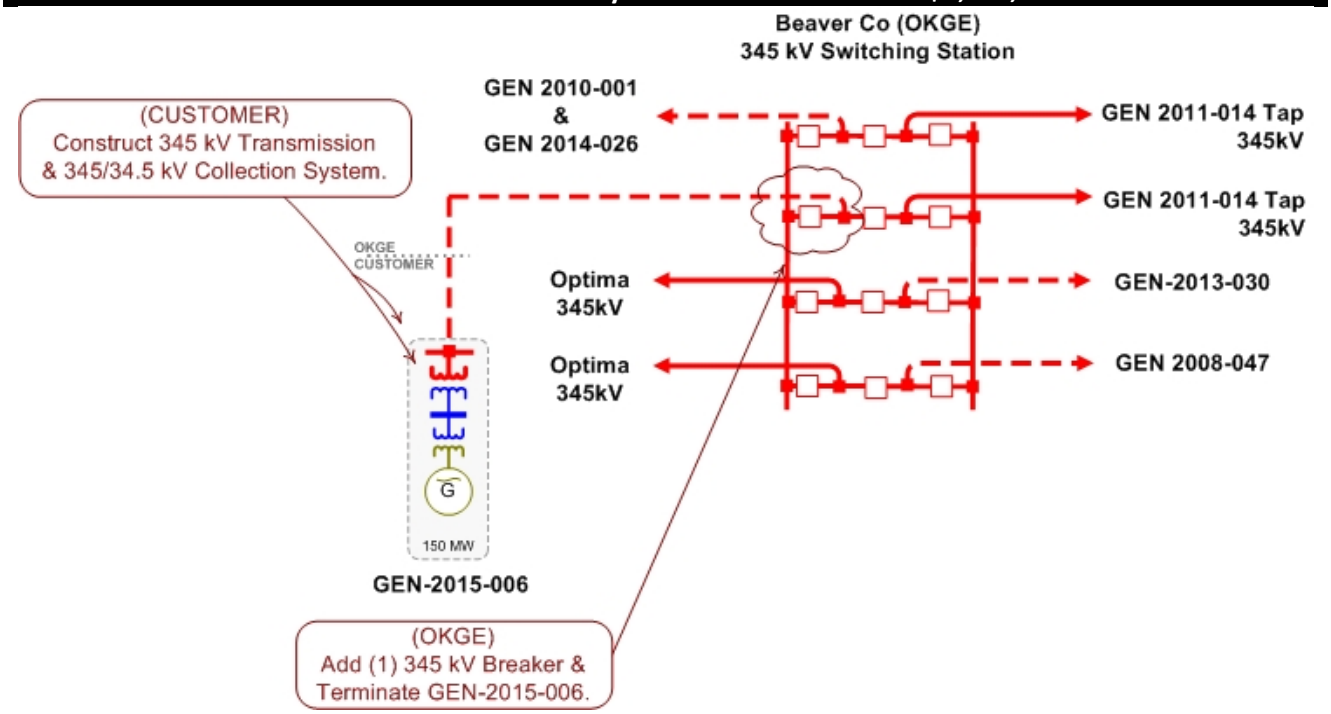

GEN-2015-007
Estimated Cluster Analysis Interconnection Cost: $5,300,000
Estimated Stand Alone Analysis Interconnection Cost: $5,300,000

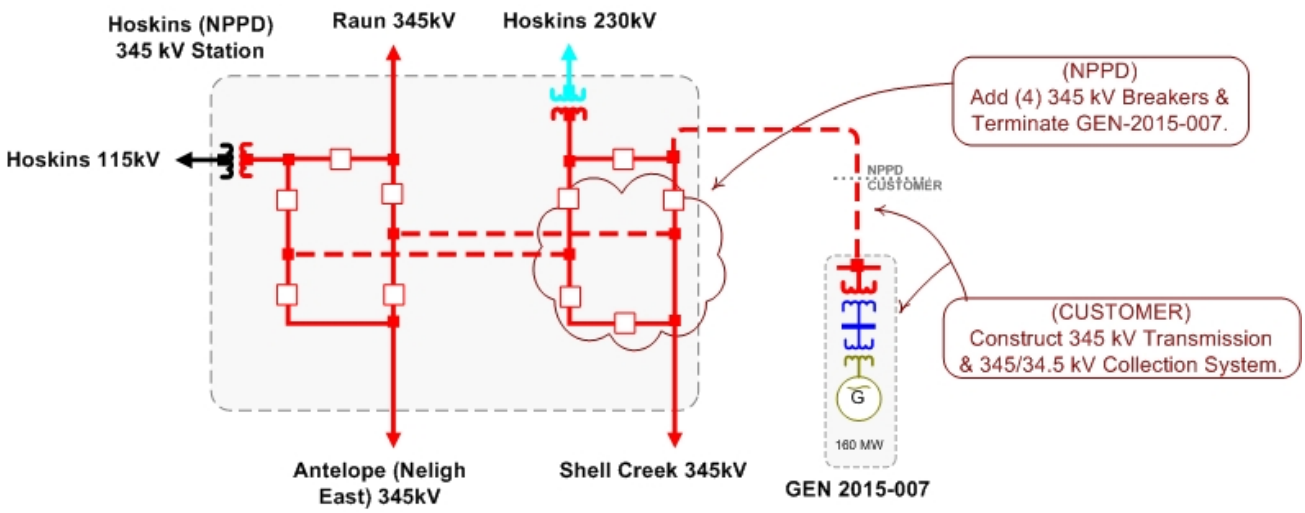

GEN-2015-008
Estimated Cluster Analysis Interconnection Cost: $1,000,000
Estimated Stand Alone Analysis Interconnection Cost: $1,000,000

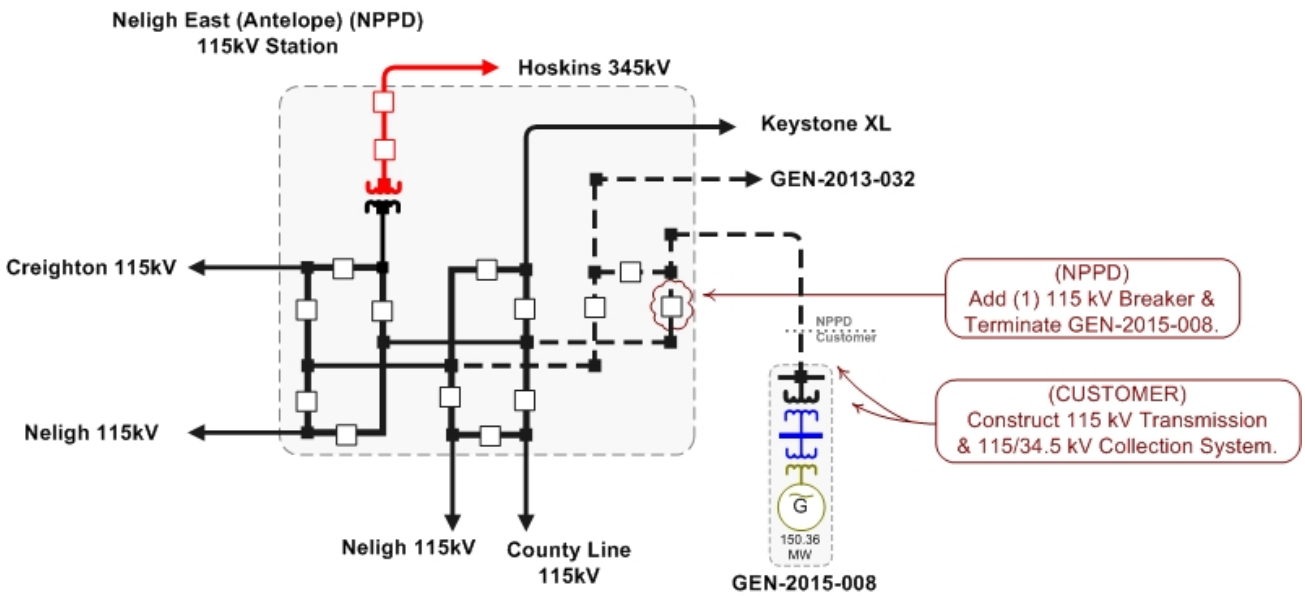

GEN-2015-009
Estimated Cluster Analysis Interconnection Cost: $1,301,825
Estimated Stand Alone Analysis Interconnection Cost: $1,301,825

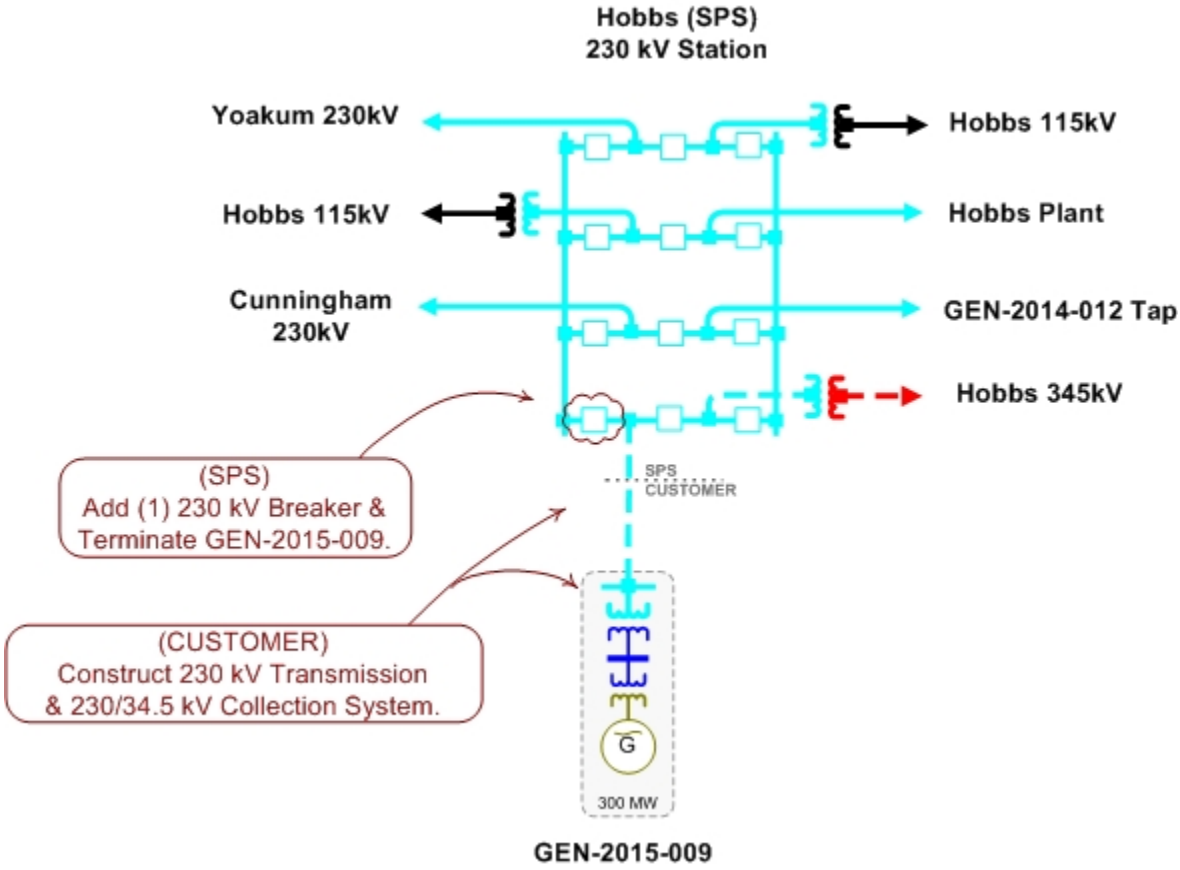

GEN-2015-010
Estimated Cluster Analysis Interconnection Cost: $6,166,348
Estimated Stand Alone Analysis Interconnection Cost: $6,166,348

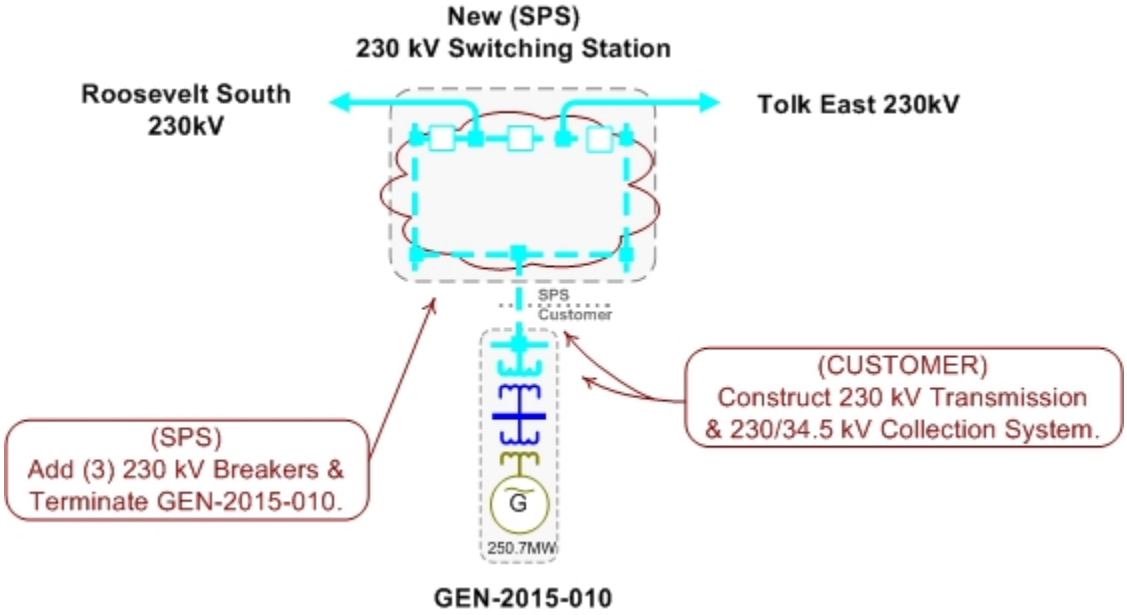

GEN-2015-013
Estimated Cluster Analysis Interconnection Cost: $1,000,000
Estimated Stand Alone Analysis Interconnection Cost: $1,000,000

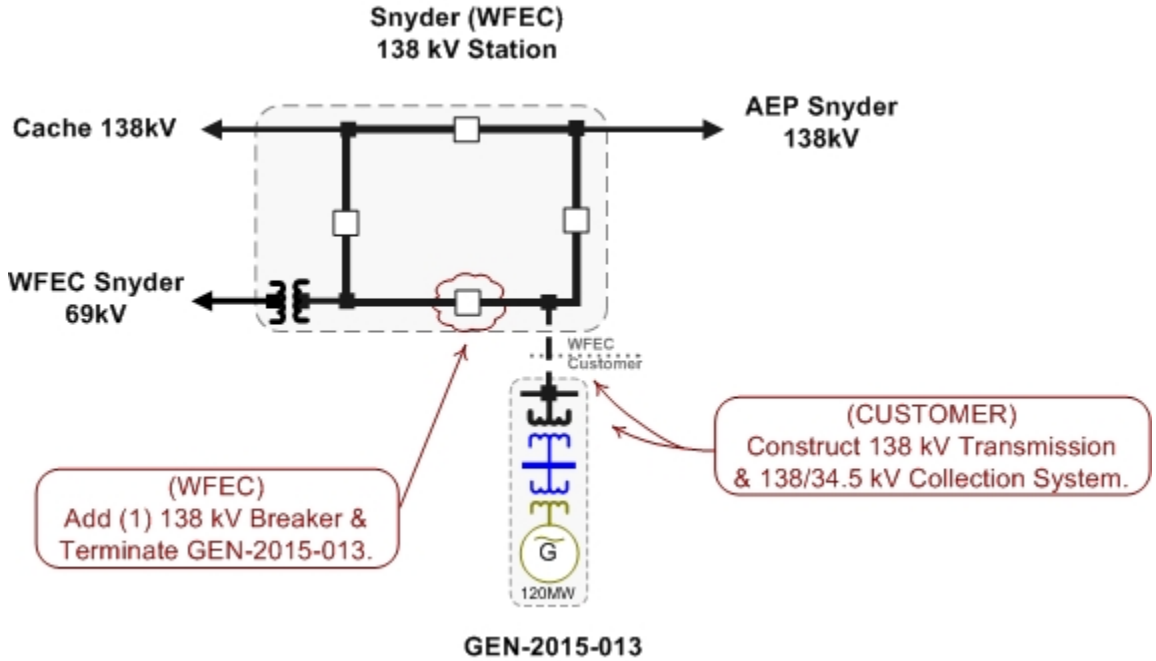

GEN-2015-014
Estimated Cluster Analysis Interconnection Cost: $4,773,333
Estimated Stand Alone Analysis Interconnection Cost: $4,773,333

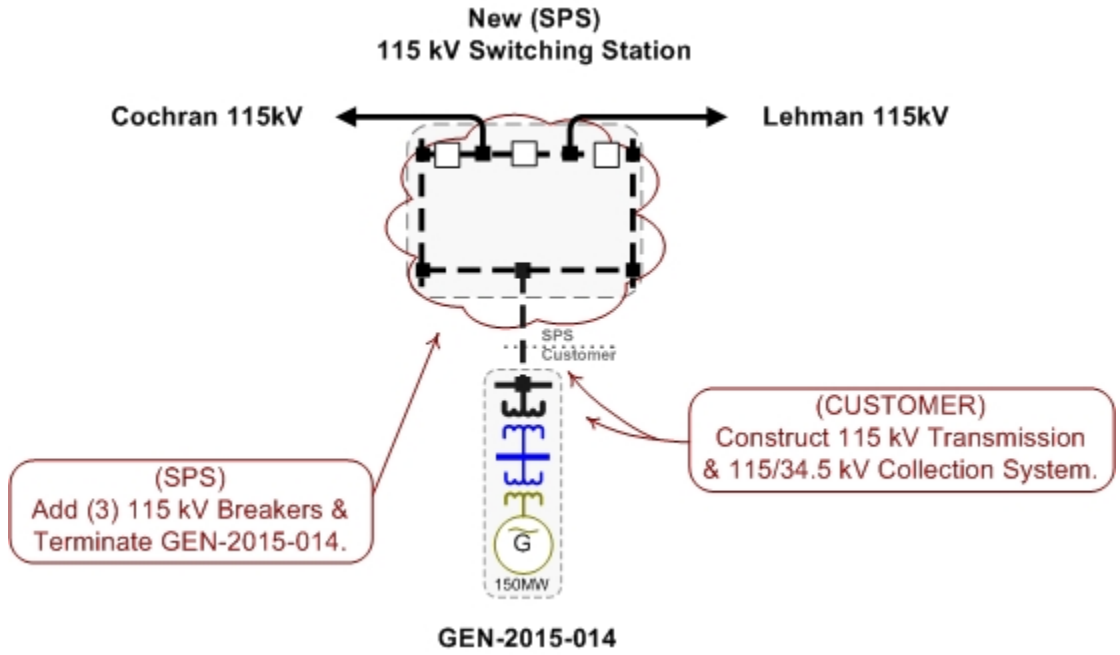

GEN-2015-015
Estimated Cluster Analysis Interconnection Cost: $3,041,661
Estimated Stand Alone Analysis Interconnection Cost: $3,041,661

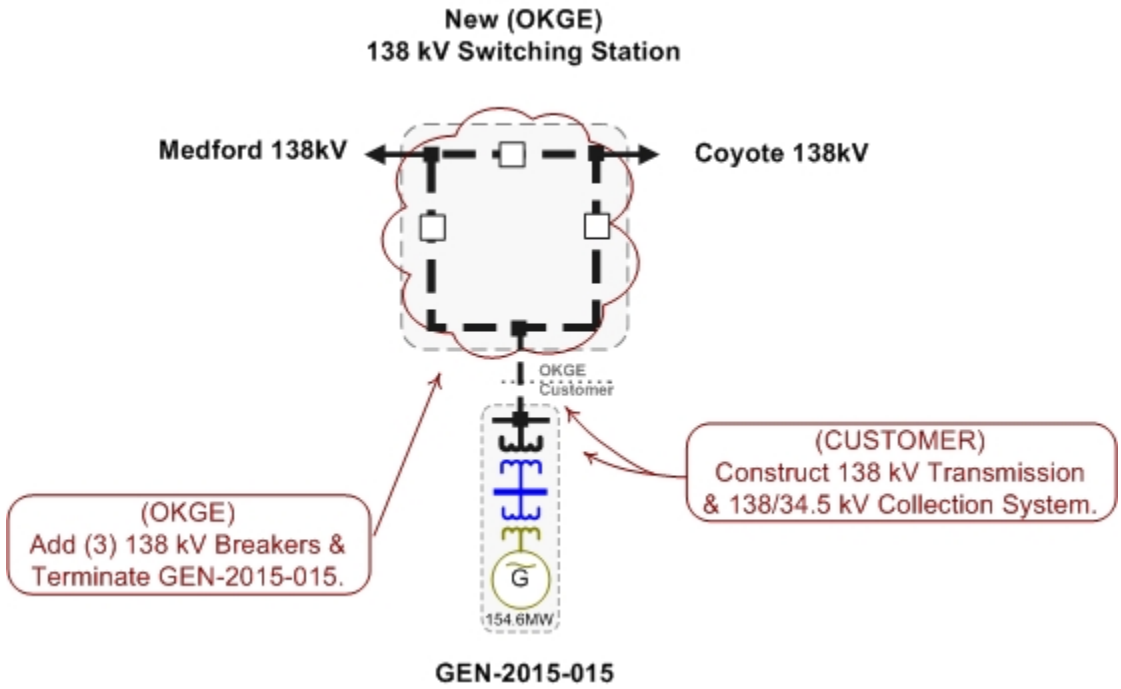

GEN-2015-016
Estimated Cluster Analysis Interconnection Cost: $8,110,000
Estimated Stand Alone Analysis Interconnection Cost: $8,110,000

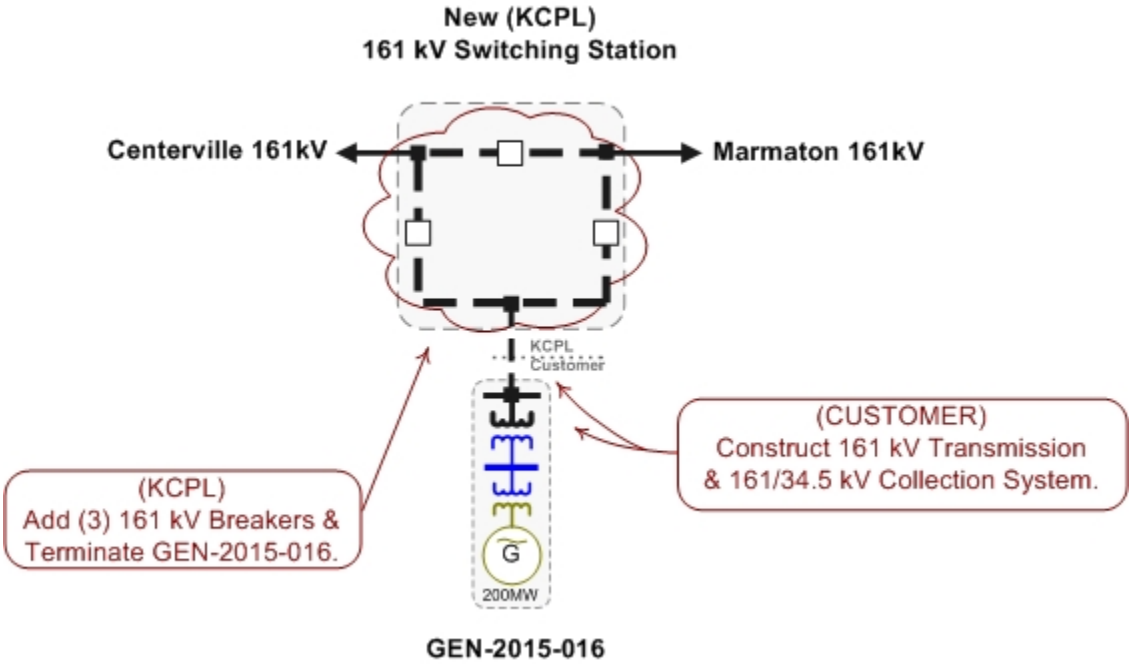

GEN-2015-017
Estimated Cluster Analysis Interconnection Cost: $3,459,098
Estimated Stand Alone Analysis Interconnection Cost: $3,459,098

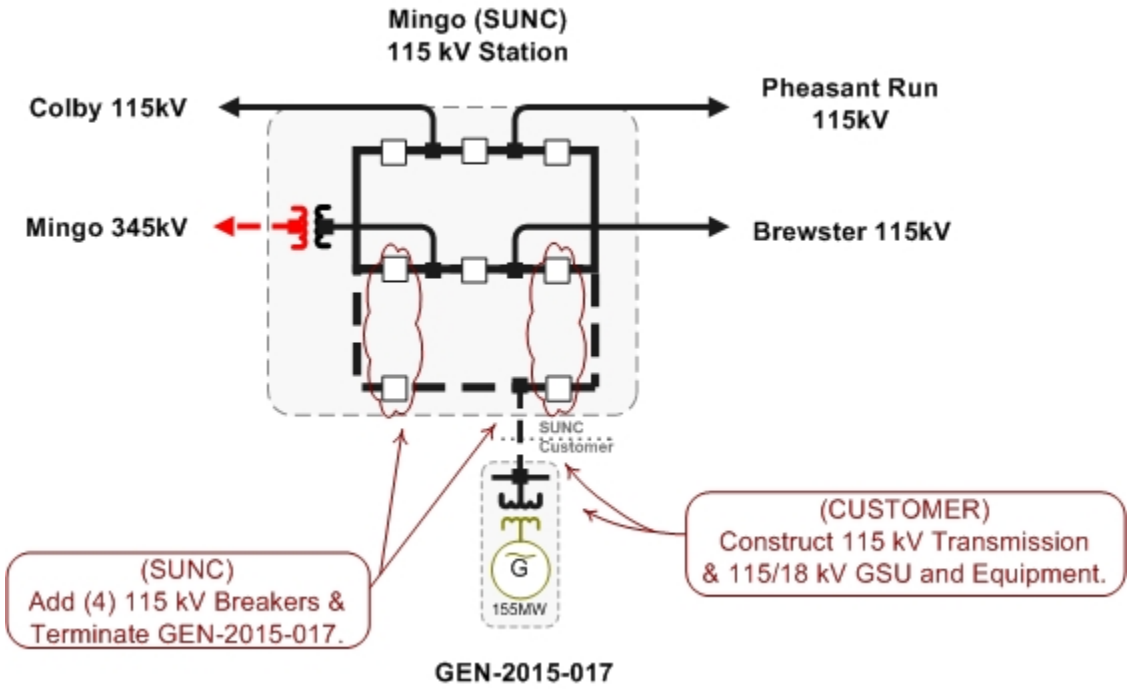

GEN-2015-018
Estimated Cluster Analysis Interconnection Cost: $4,881,118
Estimated Stand Alone Analysis Interconnection Cost: $4,881,118

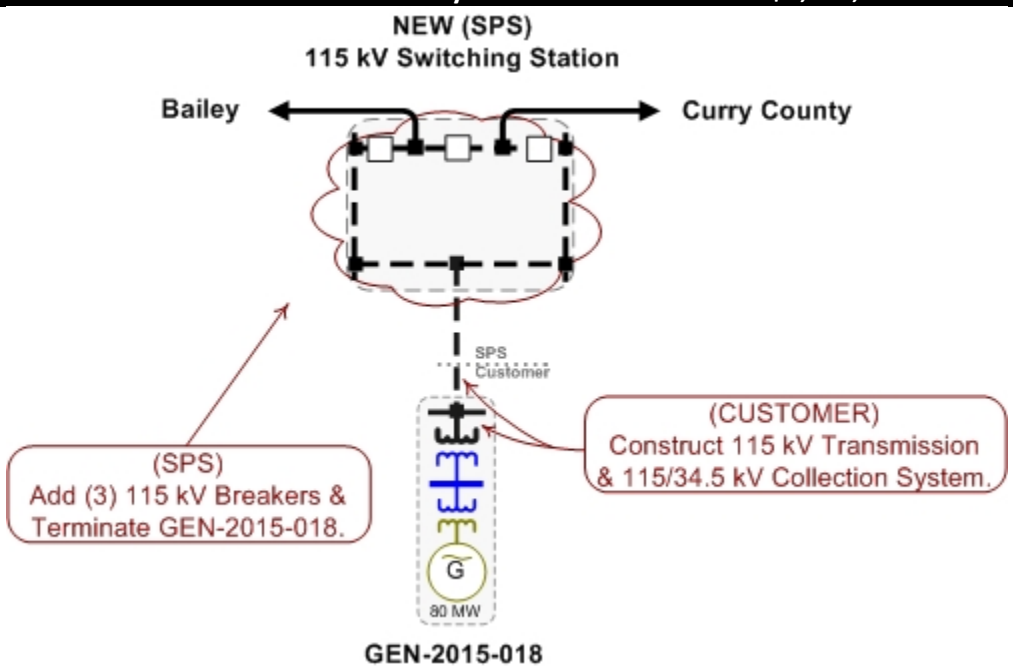

GEN-2015-019
Estimated Cluster Analysis Interconnection Cost: $1,250,000
Estimated Stand Alone Analysis Interconnection Cost: $1,250,000

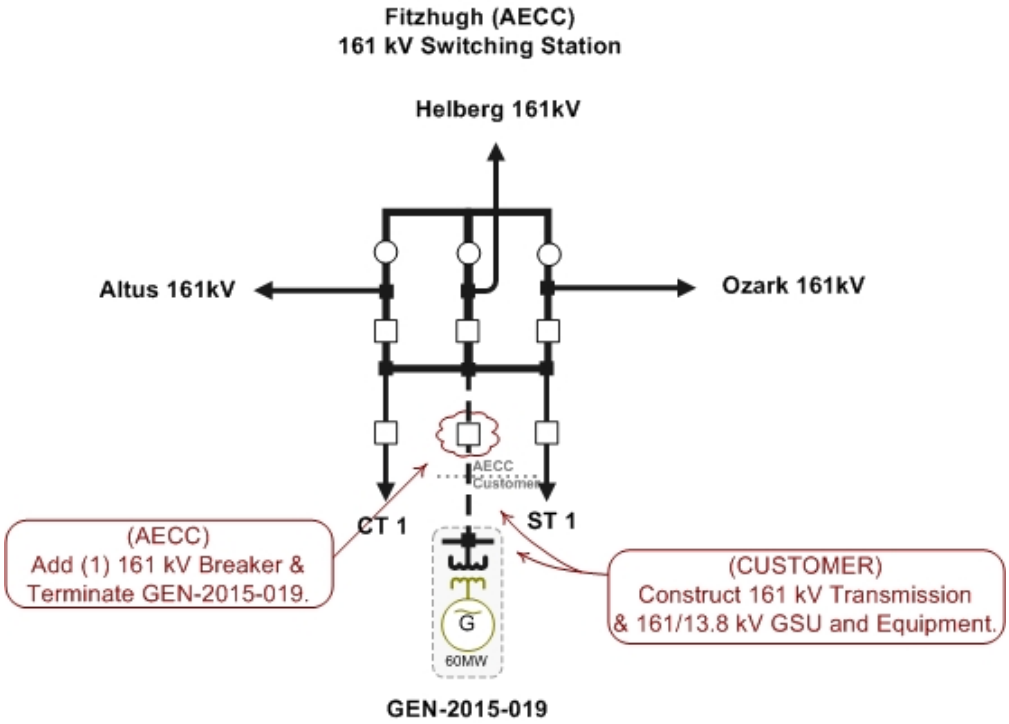

GEN-2015-020
Estimated Cluster Analysis Interconnection Cost: $8,917,920
Estimated Stand Alone Analysis Interconnection Cost: $8,917,920

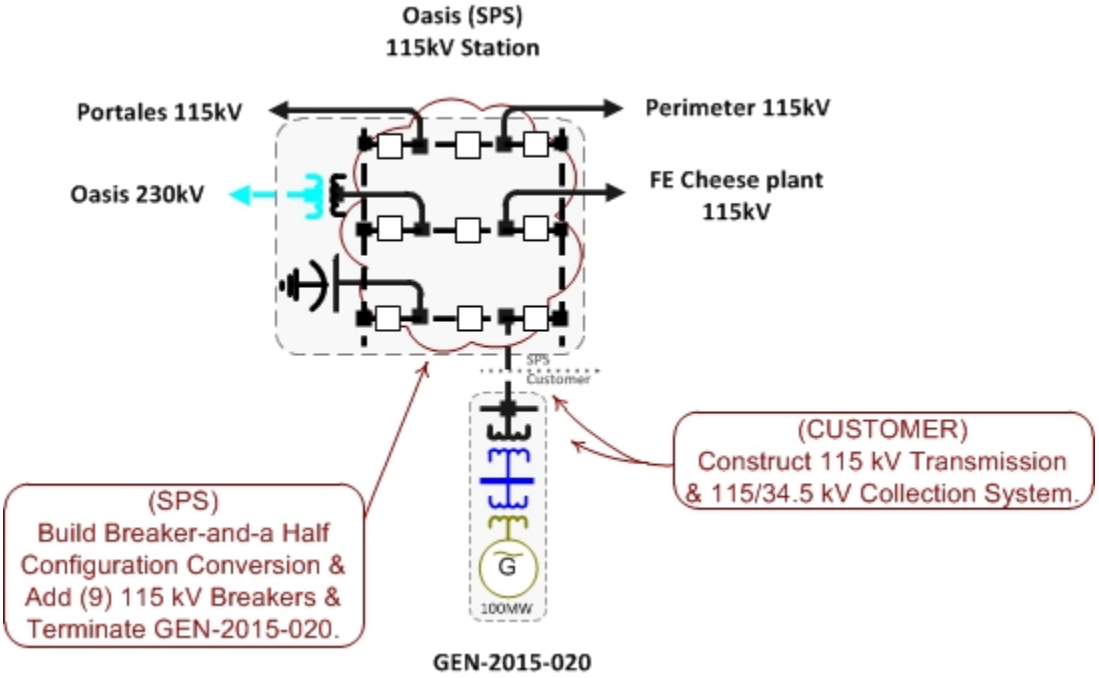

GEN-2015-021
Estimated Cluster Analysis Interconnection Cost: $1,438,309
Estimated Stand Alone Analysis Interconnection Cost: $1,438,309

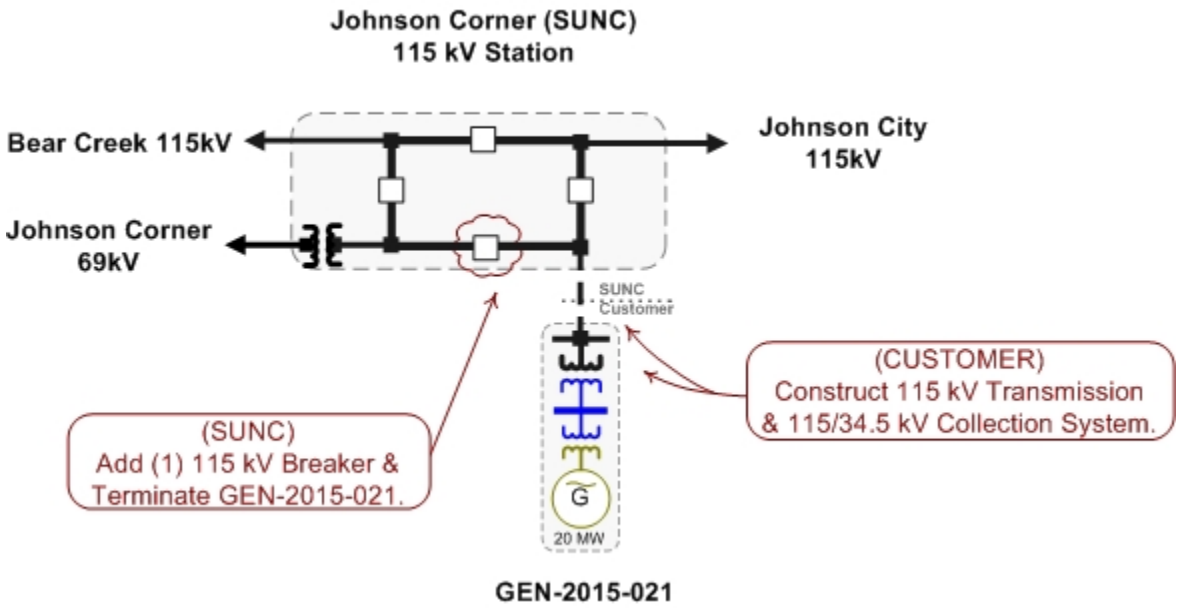

GEN-2015-022
Estimated Cluster Analysis Interconnection Cost: $3,565,234
Estimated Stand Alone Analysis Interconnection Cost: $3,565,234

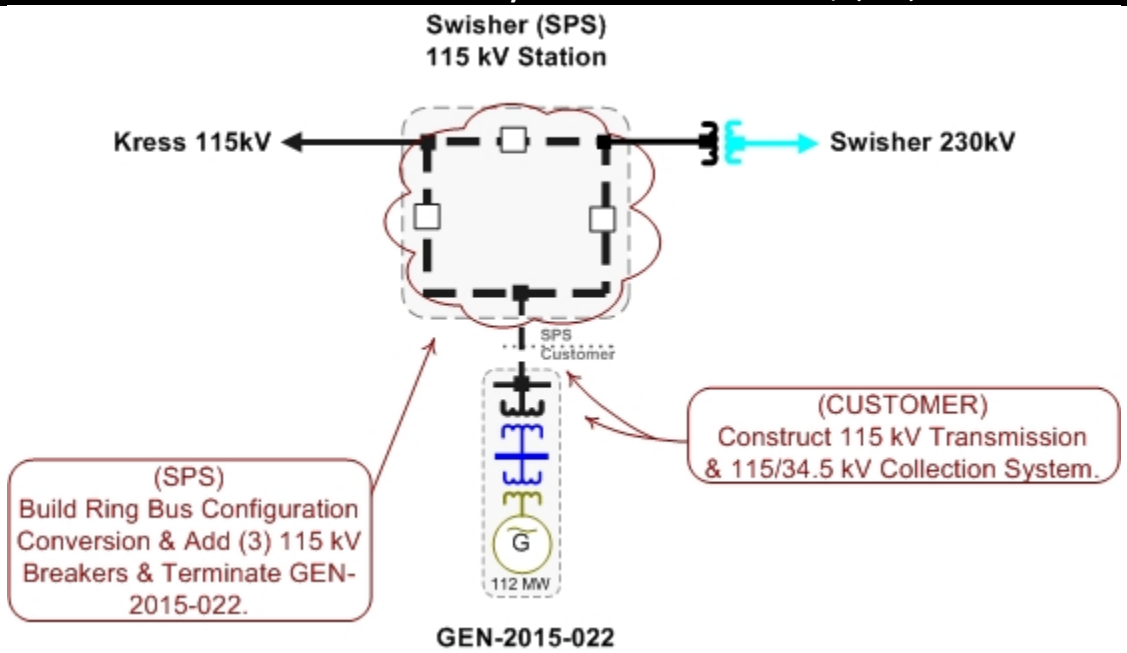

GEN-2015-023
Estimated Cluster Analysis Interconnection Cost: $4,800,000
Estimated Stand Alone Analysis Interconnection Cost: $4,800,000

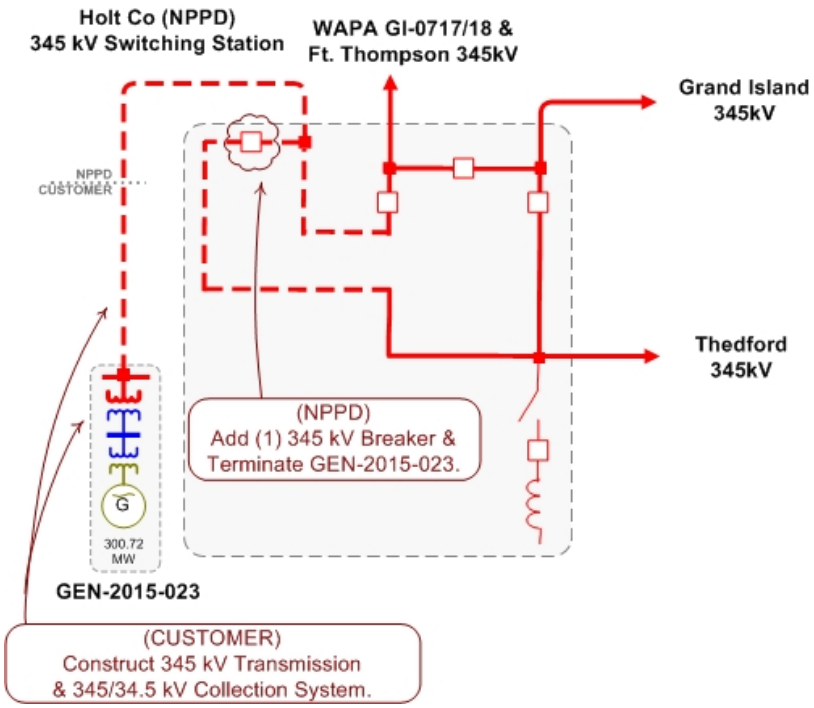

GEN-2015-024
Estimated Cluster Analysis Interconnection Cost: $32,704,640
Estimated Stand Alone Analysis Interconnection Cost: $32,704,640

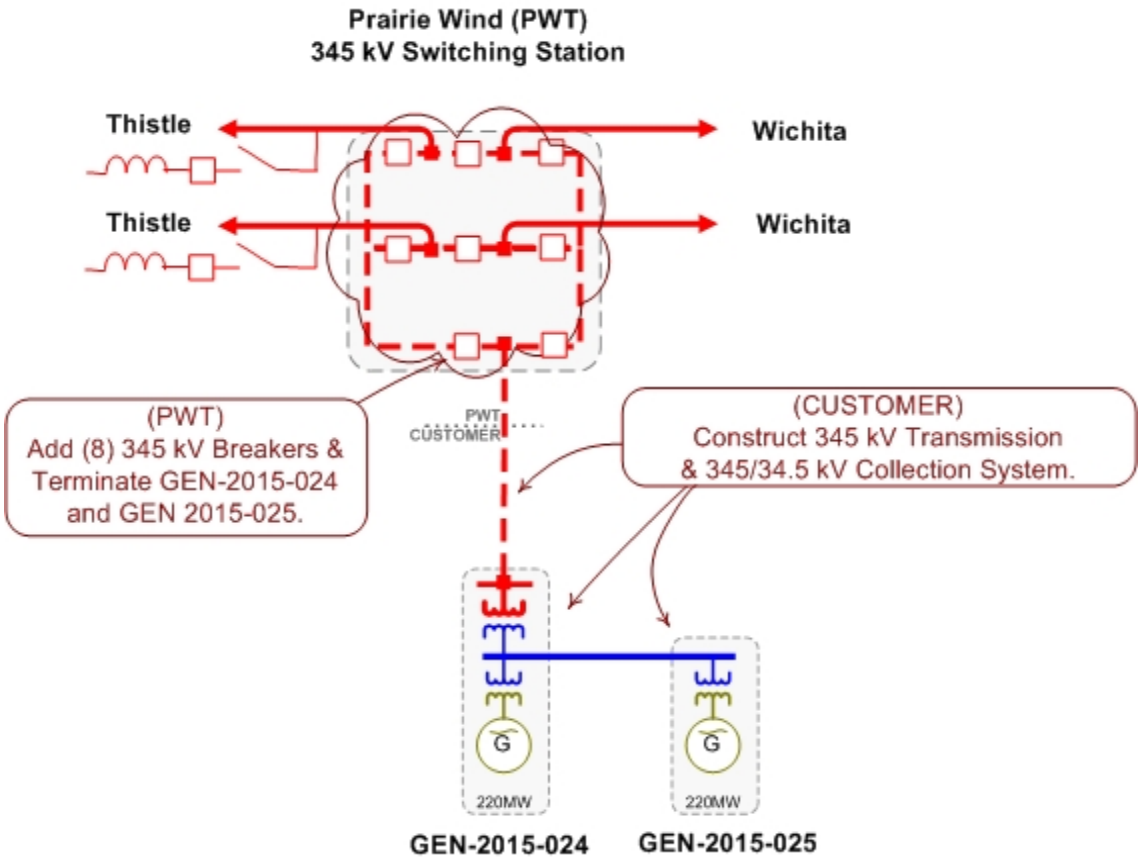

GEN-2015-025
Estimated Cluster Analysis Interconnection Cost: $0
Estimated Stand Alone Analysis Interconnection Cost: $32,704,640

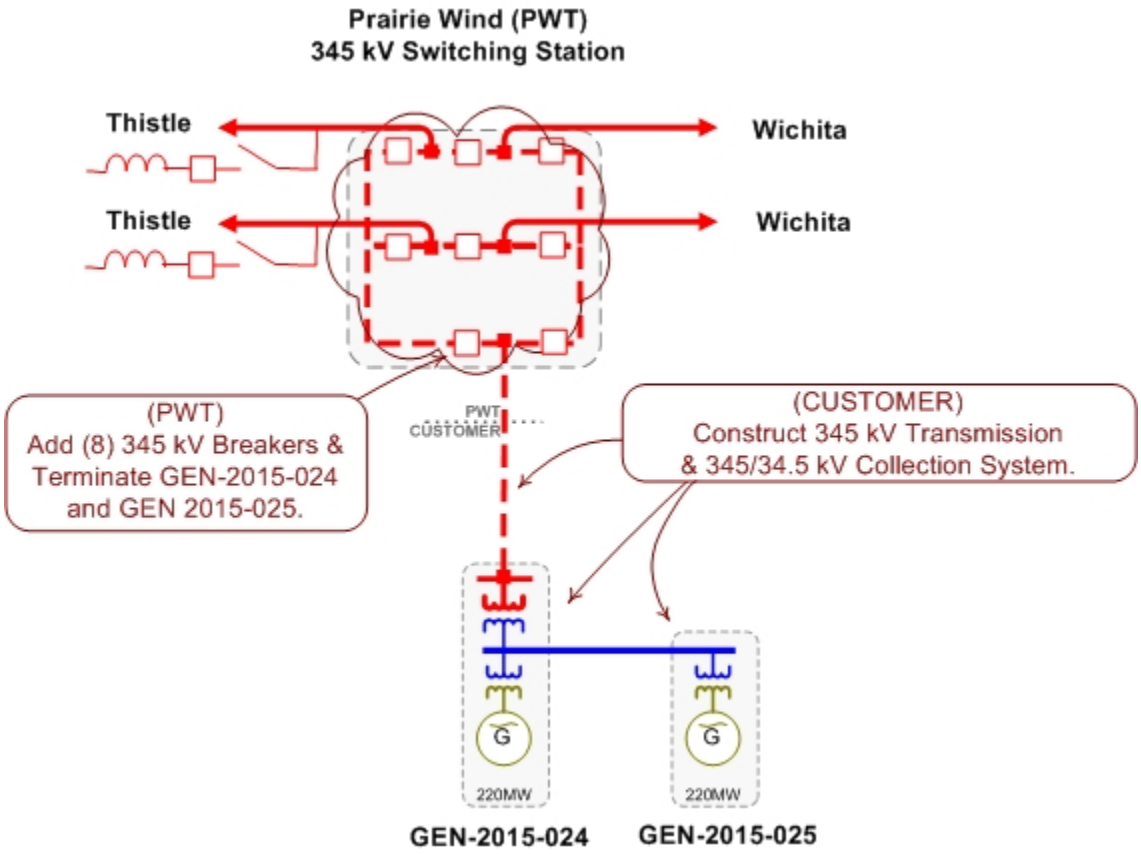

GEN-2015-026
Estimated Cluster Analysis Interconnection Cost: $150,000
Estimated Stand Alone Analysis Interconnection Cost: $150,000

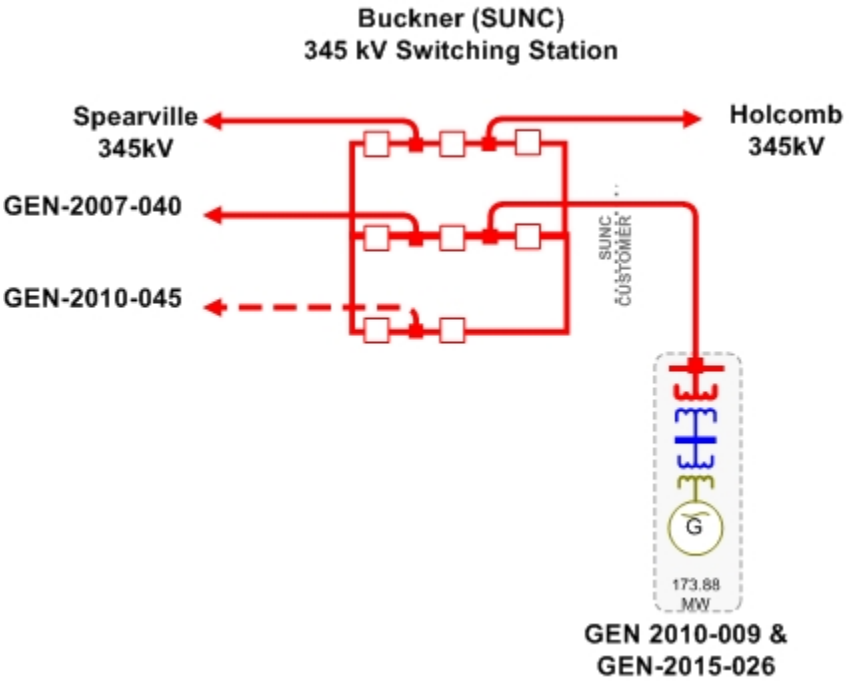

GEN-2015-027
Estimated Cluster Analysis Interconnection Cost: $150,000
Estimated Stand Alone Analysis Interconnection Cost: $150,000

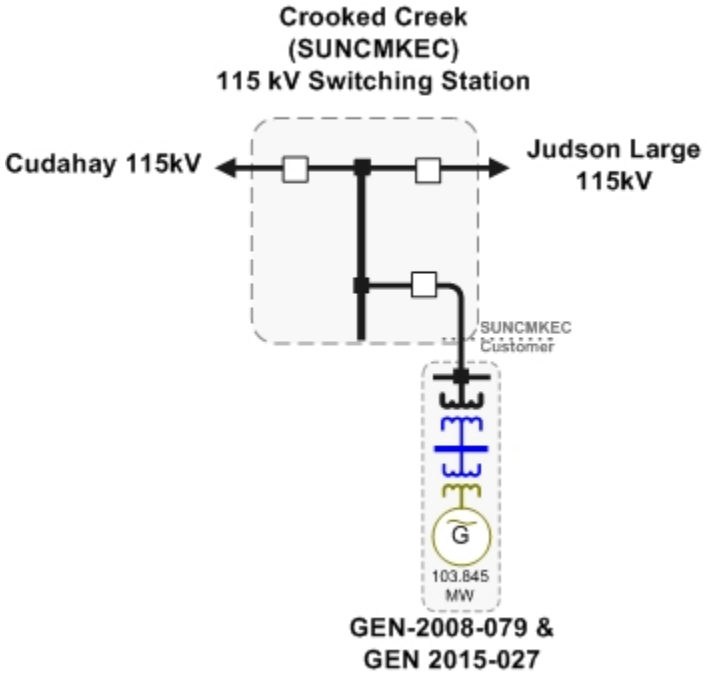

GEN-2015-028
Estimated Cluster Analysis Interconnection Cost: $0
Estimated Stand Alone Analysis Interconnection Cost: $0

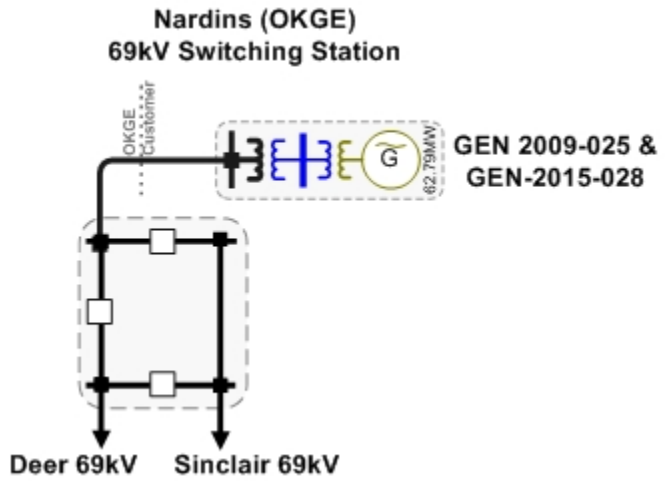

GEN-2015-029
Estimated Cluster Analysis Interconnection Cost: $2,270,100
Estimated Stand Alone Analysis Interconnection Cost: $2,270,100

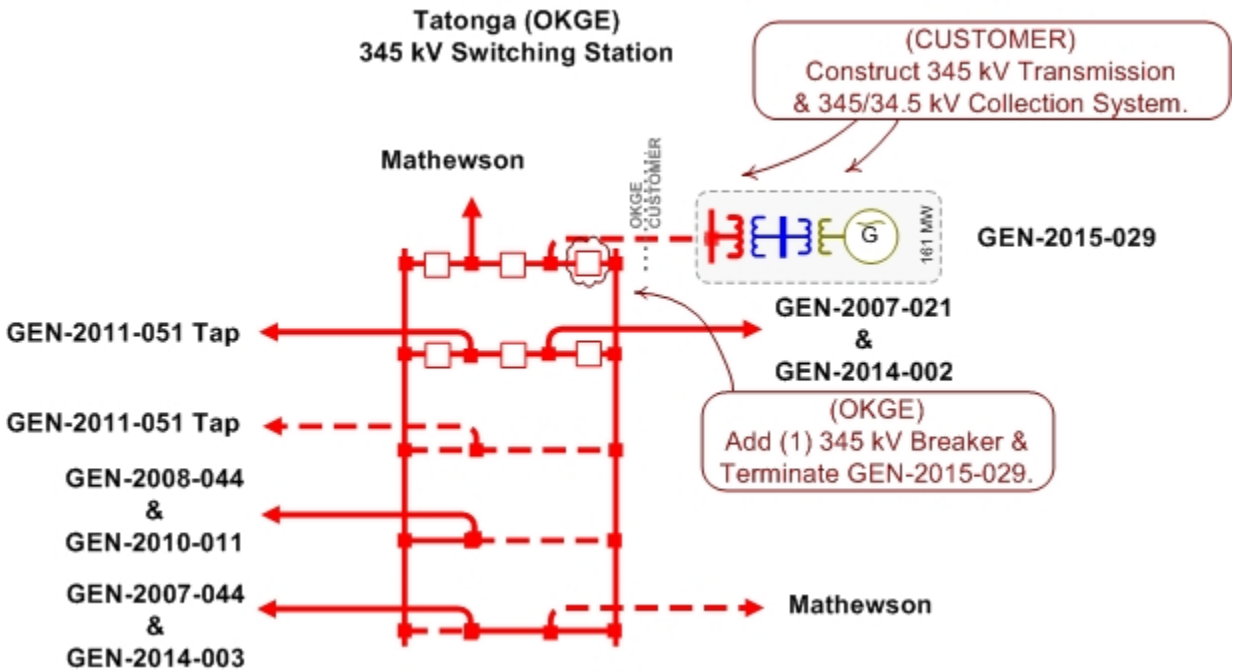

GEN-2015-030
Estimated Cluster Analysis Interconnection Cost: $3,369,366
Estimated Stand Alone Analysis Interconnection Cost: $3,369,366

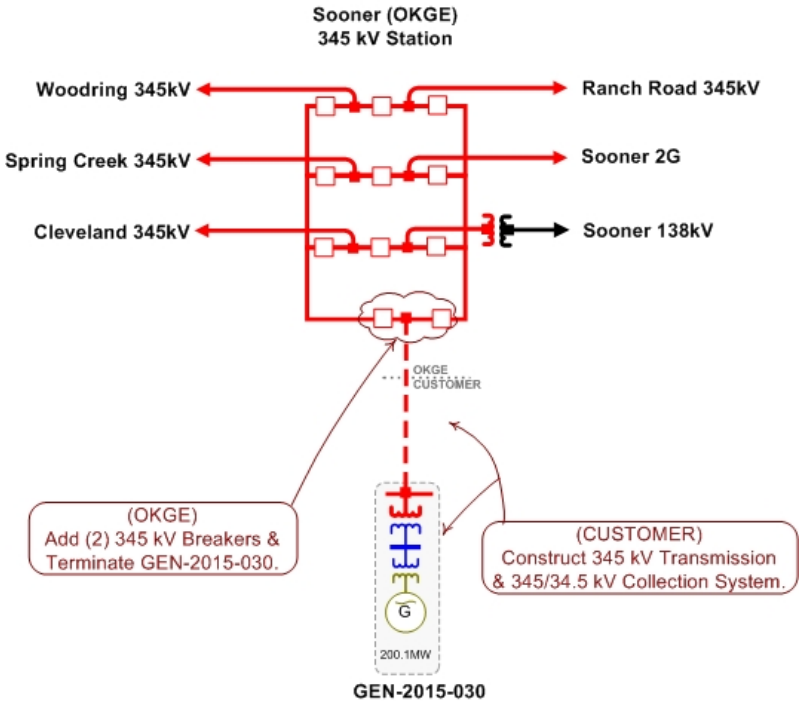

E: Cost Allocation per Interconnection Request (Including Prior Queued Upgrades)

Important Note:

****WITHDRAWAL OF HIGHER QUEUED PROJECTS WILL CAUSE A RESTUDY AND MAY RESULT IN HIGHER INTERCONNECTION COSTS****

This section shows each Generation Interconnection Request Customer, their current study impacted Network Upgrades, and the previously allocated upgrades upon which they rely to accommodate their interconnection to the transmission system.

The costs associated with the current study Network Upgrades are allocated to the Customers shown in this report.

In addition should a higher queued request, defined as one this study includes as a prior queued request, withdraw, the Network Upgrades assigned to the withdrawn request may be reallocated to the remaining requests that have an impact on the Network Upgrade under a restudy. Also, should an Interconnection Request choose to go into service prior to the operation date of any necessary Network Upgrades, the costs associated with those upgrades may be reallocated to the impacted Interconnection Request. The actual costs allocated to each Generation Interconnection Request Customer will be determined at the time of a restudy.

The required interconnection costs listed do not include all costs associated with the deliverability of the energy to final customers. These costs are determined by separate studies if the Customer submits a Transmission Service Request through SPP's Open Access Same Time Information System (OASIS) as required by Attachment Z1 of the SPP OATT. In addition, costs associated with a short circuit analysis will be allocated should the Interconnection Request Customer choose to execute a Facility Study Agreement.

There may be additional costs allocated to each Customer. See Appendix F for more details.

Appendix E. Cost Allocation Per Request

(Including Previously Allocated Network Upgrades*)

Interconnection Request and Upgrades	Upgrade Type	Allocated Cost	Upgrade Cost
ASGI-2015-001			
ASGI-2015-001 Interconnection Costs See One-Line Diagram.	Current Study	$3,188,259	$3,188,259
Clark County Reactive Power Support Install 100Mvar SVC at Clark County Substation.	Previously Allocated		$24,303,536
FPL Switch - Mooreland 138kV CKT 1 Rebuild approximately 0.2 miles of 138kV line	Previously Allocated		$820,000
FPL Switch - Woodward 138kV CKT 1 Rebuild approximately 12 miles of 138kV line	Previously Allocated		$8,499,000
Harper - Milan Tap 138kV CKT 1 Rebuild approximately 22 miles of 138kV line	Previously Allocated		$9,613,332
Knoll - Postrock 230kV CKT 1 Rebuild approximately 1 mile of 230kV from Knoll - Post Rock.	Previously Allocated		$500,000
Milan Tap - Clearwater 138kV CKT 1 Rebuild approximately 12 miles of 138kV line	Previously Allocated		$18,000,000
Walkemeyer Tap - Walkemeyer 345/115kV Project Per SPP-NTC-200343 (Total Project E&C Cost Shown).	Previously Allocated		$17,838,846
	Current Study Total	$3,188,259	
ASGI-2015-002			
ASGI-2015-002 Interconnection Costs See One-Line Diagram.	Current Study	$0	$0
Border - Chisholm 345kV CKT 2 Build approximately 25 miles of second circuit 345kV from Border - Chisholm	Current Study	$44,366	$25,000,000
Border 345kV Reactive Power Support Install 200Mvar Capacitor Bank(s) and +200Mvar SVC at Border Substation.	Current Study	$47,991	$30,000,000
Chisholm - Elk City 230kV CKT 1 Rebuild approximately 15 miles of 230kV from Chisholm - Elk City.	Current Study	$21,754	$15,000,000
Chisholm Substation Upgrade 345kV Expand planned Chisholm Substation to tap and terminate Woodward - Border 345kV into the Chisholm Substation.	Current Study	$14,037	$12,000,000

* Withdrawal of higher queued projects will cause a restudy and may result in higher costs

Interconnection Request and Upgrades	Upgrade Type	Allocated Cost	Upgrade Cost
Elk City 230/138/13kV Transformer CKT 1 Replace terminal equipment for Elk City Transformer to achieve transformer limit of 450MVA.	Current Study	$21,754	$15,000,000
Grapevine - Chisholm 345kV CKT 1 Build approximately 75 miles of new 345kV from Grapevine - Chisholm.	Current Study	$48,718	$75,000,000
Grapevine Substation Upgrade 345kV Build Grapevine Substation and terminate Beaver Co - Grapevine, Potter Co - Grapevine, Grapevine - Chisholm 345kV into the Grapevine Substation.	Current Study	$7,795	$12,000,000
Oklaunion 345kV Reactive Power Support Incremental Upgrade Install additional +100Mvar SVC at Oklaunion.	Current Study	$35,493	$20,000,000
Pleasant Hill - Potter County 345kV CKT 1 Build approximately 125 miles of 345kV from Pleasant Hill - Potter County	Current Study	$116,100	$125,000,000
Pleasant Hill 345/230/13kV Tranformer CKT 1 Build 345/230/13kV transformer at Pleasant Hill	Current Study	$7,092	$15,000,000
Potter County - Grapevine 345kV CKT 1 Build approximately 65 miles of new 345kV from Potter County - Grapevine.	Current Study	$64,687	$65,000,000
Potter County Interchange 345/230/13kV Transformer CKT 2 Build second 345/230/13kV transformer at Potter County	Current Study	$18,834	$15,000,000
Tolk - Pleasant Hill 345kV CKT 1 Build approximately 50 miles of 345kV from Tolk - Pleasant Hill	Current Study	$72,282	$50,000,000
TUCO 2 - Border 345kV CKT 2 Build approximately 194 miles of second circuit 345kV from TUCO 2 - Border	Current Study	$344,280	$194,000,000
TUCO 2 - Yoakum 345kV Retermination Incremental Upgrade for SPP-NTC-200283 to reterminate TUCO terminal to TUCO 2 terminal by adding approximately 3 miles of 345kV	Current Study	$2,324	$5,000,000
Agave Hill 115kV Reactive Power Support Build Agave Hill 28.8Mvar Capacitor bank per 2015 ITPNT.	Previously Allocated		$1,619,280
Amoco Wasson - Oxy Tap 230kV CKT 1 Replace line traps at both terminals	Previously Allocated		$200,000
Chisholm - Gracemont 345kV CKT 1 Per SPP-NTC-200255 and 200240 (Total Project E&C Cost Shown)	Previously Allocated		$162,952,357
Ochoa 115kV Reactive Power Support Build Ochoa 28.8Mvar Capacitor bank per 2015 ITPNT.	Previously Allocated		$1,619,280
Oklaunion 345kV Reactive Power Support Install 110Mvar Capacitor Bank(s) and +50Mvar/-50Mvar SVC at Oklaunion.	Previously Allocated		$25,000,000

* Withdrawal of higher queued projects will cause a restudy and may result in higher costs

Interconnection Request and Upgrades	Upgrade Type	Allocated Cost	Upgrade Cost
Potash Junction 230kV Reactive Power Support Build Potash Junction 100Mvar Capacitor bank per 2015 ITPNT.	Previously Allocated		$6,465,875
TUCO 2 Substation Upgrade 345/230kV Tap Border-TUCO approximately 2 miles from TUCO and build TUCO 2 345kV substation and add 345/230/13.2kV transformer and tie on TUCO-Swisher 230kV.	Previously Allocated		$18,000,000
TUCO Interchange - TUCO 2 230kV CKT 1 Replace wave trap at TUCO	Previously Allocated		$1,000,000
TUCO Interchange - Yoakum - Hobbs 345/230kV Project Per HPILs SPP-NTC-200283 (Total Project E&C Cost Shown)	Previously Allocated		$241,826,483
	Current Study Total	$867,505	
ASGI-2015-003			
ASGI-2015-003 Interconnection Costs See One-Line Diagram.	Current Study	$0	$0
Border - Chisholm 345kV CKT 2 Build approximately 25 miles of second circuit 345kV from Border - Chisholm	Current Study	$419,878	$25,000,000
Border 345kV Reactive Power Support Install 200Mvar Capacitor Bank(s) and +200Mvar SVC at Border Substation.	Current Study	$548,183	$30,000,000
Chisholm - Elk City 230kV CKT 1 Rebuild approximately 15 miles of 230kV from Chisholm - Elk City.	Current Study	$332,464	$15,000,000
Chisholm Substation Upgrade 345kV Expand planned Chisholm Substation to tap and terminate Woodward - Border 345kV into the Chisholm Substation.	Current Study	$132,839	$12,000,000
Elk City 230/138/13kV Transformer CKT 1 Replace terminal equipment for Elk City Transformer to achieve transformer limit of 450MVA.	Current Study	$332,464	$15,000,000
Grapevine - Chisholm 345kV CKT 1 Build approximately 75 miles of new 345kV from Grapevine - Chisholm.	Current Study	$1,477,530	$75,000,000
Grapevine Substation Upgrade 345kV Build Grapevine Substation and terminate Beaver Co - Grapevine, Potter Co - Grapevine, Grapevine - Chisholm 345kV into the Grapevine Substation.	Current Study	$236,405	$12,000,000
Oklaunion 345kV Reactive Power Support Incremental Upgrade Install additional +100Mvar SVC at Oklaunion.	Current Study	$335,903	$20,000,000
Pleasant Hill - Potter County 345kV CKT 1 Build approximately 125 miles of 345kV from Pleasant Hill - Potter County	Current Study	$4,542,759	$125,000,000
Pleasant Hill 345/230/13kV Tranformer CKT 1 Build 345/230/13kV transformer at Pleasant Hill	Current Study	$1,108,717	$15,000,000

* Withdrawal of higher queued projects will cause a restudy and may result in higher costs

Interconnection Request and Upgrades	Upgrade Type	Allocated Cost	Upgrade Cost
Potter County - Grapevine 345kV CKT 1 Build approximately 65 miles of new 345kV from Potter County - Grapevine.	Current Study	$1,961,968	$65,000,000
Potter County Interchange 345/230/13kV Transformer CKT 2 Build second 345/230/13kV transformer at Potter County	Current Study	$9,315	$15,000,000
Tolk - Pleasant Hill 345kV CKT 1 Build approximately 50 miles of 345kV from Tolk - Pleasant Hill	Current Study	$2,442,858	$50,000,000
TUCO 2 - Border 345kV CKT 2 Build approximately 194 miles of second circuit 345kV from TUCO 2 - Border	Current Study	$3,258,255	$194,000,000
TUCO 2 - Yoakum 345kV Retermination Incremental Upgrade for SPP-NTC-200283 to reterminate TUCO terminal to TUCO 2 terminal by adding approximately 3 miles of 345kV	Current Study	$58,106	$5,000,000
Chisholm - Gracemont 345kV CKT 1 Per SPP-NTC-200255 and 200240 (Total Project E&C Cost Shown)	Previously Allocated		$162,952,357
National Enrichment Plant-Targa 115kV CKT 1 Rebuild approximately 4 miles of 115kV from National Enrichment Plant to Targa per 2015 ITPNT.	Previously Allocated		$2,909,669
Norton - Pleasant Hill 230kV CKT 1 Convert 54 miles of 115kV from Norton - Pleasant Hill to 230kV.	Previously Allocated		$40,000,000
Oklaunion 345kV Reactive Power Support Install 110Mvar Capacitor Bank(s) and +50Mvar/-50Mvar SVC at Oklaunion.	Previously Allocated		$25,000,000
Potash Junction 230/115 kV Ckt 1 Per HPILs SPP-NTC-200282 (Total Project E&C Cost Shown)	Previously Allocated		$3,508,346
Targa-Cardinal 115kV CKT 1 Rebuild approximately 3 miles of 115kV from Targa to Cardinal per 2015 ITPNT.	Previously Allocated		$2,049,062
Tolk - Plant X 230kV CKT 3 Build a 3rd circuit betweek Tolk - Plant X 230kV	Previously Allocated		$20,000,000
TUCO 2 Substation Upgrade 345/230kV Tap Border-TUCO approximately 2 miles from TUCO and build TUCO 2 345kV substation and add 345/230/13.2kV transformer and tie on TUCO-Swisher 230kV.	Previously Allocated		$18,000,000
TUCO Interchange - TUCO 2 230kV CKT 1 Replace wave trap at TUCO	Previously Allocated		$1,000,000
TUCO Interchange - Yoakum - Hobbs 345/230kV Project Per HPILs SPP-NTC-200283 (Total Project E&C Cost Shown)	Previously Allocated		$241,826,483
	Current Study Total	$17,197,644	

* Withdrawal of higher queued projects will cause a restudy and may result in higher costs

Interconnection Request and Upgrades	Upgrade Type	Allocated Cost	Upgrade Cost
ASGI-2015-004			
ASGI-2015-004 Interconnection Costs See One-Line Diagram.	Current Study	$0	$0
Fairfax 138/69kV CKT 1 Per AECI Affected System Study for DISIS-2012-002	Previously Allocated		$2,200,000
Remington - Fairfax 138KV CKT 1 Increase conductor clearance	Previously Allocated		$400,000
	Current Study Total	$0	
GEN-2010-048			
GEN-2010-048 Interconnection Costs See One-Line Diagram.	Current Study	$4,000,000	$4,000,000
Arnold - Ransom 115kV CKT 1 Replace terminal equipment to achieve at least a 600 amp rating.	Previously Allocated		$3,000,000
Bucker - Spearville 345V CKT 1 Replace Terminal equipment	Previously Allocated		$1,480,238
Mingo 345/115kV Transformer CKT 2 Build second 345/115/13.8kV transformer at Mingo per 2015 ITP10 SPP-NTC-200325.	Previously Allocated		$9,842,317
	Current Study Total	$4,000,000	
GEN-2014-023			
Albion - Petersburg - North Petersburg 115kV CKT 1 Reconductor 115kV lines and replace all terminal equipment for at least a 193MVA rate.	Current Study	$860,684	$3,500,000
GEN-2014-023 Interconnection Costs See One-Line Diagram.	Current Study	$9,200,000	$9,200,000
GEN-2014-059 Tap - Ogallala 230kV CKT 1 Replace terminal equipment and increase line clearance. ERIS upgrade for GEN-2014-059. NRIS upgrade for GEN-2014-023.	Current Study	$13,347	$3,000,000
Meadow Grove - North Petersburg 115kV CKT 1 Build approx. 25 miles of new 115kV circuit from Meadow Grove - N. Petersburg, expand N. Petersburg 115kV Sub and replace equip. at Neligh 115kV Sub.	Current Study	$16,200,000	$16,200,000
Meadow Grove 230/115/13.8kV Transformer CKT 1 Build Meadow Grove 230/115/13.8kV Transformer and Substation Expansion.	Current Study	$11,300,000	$11,300,000
Battle Creek-County Line 115kV CKT 1 Rebuild approximately 11 miles of 115kV from Battle Creek to County Line.	Previously Allocated		$4,000,000

* Withdrawal of higher queued projects will cause a restudy and may result in higher costs

Interconnection Request and Upgrades	Upgrade Type	Allocated Cost	Upgrade Cost
County Line-Neligh East 115kV CKT 1 Rebuild approximately 12 miles of 115kV from County Line to Neligh East.	Previously Allocated		$8,050,000
Gentleman - Thedford 345kV CKT 1 Build approximately 76 Miles of 345kV from Gentleman to Thedford. (Total Project E&C Cost Shown).	Previously Allocated		$313,376,623
Hoskins - Neligh 345/115kV Projects Per SPP 2014 ITP NT and NTC 200253 for 6/1/2016 in-service.	Previously Allocated		$98,697,720
Thedford - Holt County 345kV CKT 1 Build approximately 146 Miles of 345kV from Thedford to Holt County. (Total Project E&C Cost Shown).	Previously Allocated		$313,376,623
	Current Study Total	$37,574,031	
GEN-2014-037			
Beaver County - Grapevine 345kV CKT 1 Build approximately 75 miles of new 345kV from Beaver County - Grapevine.	Current Study	$27,419,556	$75,000,000
Chisholm Substation Upgrade 345kV Expand planned Chisholm Substation to tap and terminate Woodward - Border 345kV into the Chisholm Substation.	Current Study	$1,097,292	$12,000,000
GEN-2014-037 Interconnection Costs See One-Line Diagram.	Current Study	$20,339,743	$20,339,743
Grapevine - Chisholm 345kV CKT 1 Build approximately 75 miles of new 345kV from Grapevine - Chisholm.	Current Study	$9,523,592	$75,000,000
Grapevine Substation Upgrade 345kV Build Grapevine Substation and terminate Beaver Co - Grapevine, Potter Co - Grapevine, Grapevine - Chisholm 345kV into the Grapevine Substation.	Current Study	$1,523,775	$12,000,000
Beaver County 345kV Reactive Power Support Install 75Mvar SVC at Beaver County Substation.	Previously Allocated		$21,823,556
Chisholm - Gracemont 345kV CKT 1 Per SPP-NTC-200255 and 200240 (Total Project E&C Cost Shown)	Previously Allocated		$162,952,357
FPL Switch - Mooreland 138kV CKT 1 Rebuild approximately 0.2 miles of 138kV line	Previously Allocated		$820,000
FPL Switch - Woodward 138kV CKT 1 Rebuild approximately 12 miles of 138kV line	Previously Allocated		$8,499,000
Mathewson - Cimarron 345kV CKT 2 Build second 345kV circuit from Matthewson - Cimarron @ 3000 amps per ITP10.	Previously Allocated		$42,903,753
Tatonga - Mathewson 345kV CKT 2 Build second 345kV circuit from Tatonga - Matthewson @ 3000 amps per ITP10.	Previously Allocated		$104,260,473

* Withdrawal of higher queued projects will cause a restudy and may result in higher costs

Interconnection Request and Upgrades	Upgrade Type	Allocated Cost	Upgrade Cost
Walkemeyer Tap - Walkemeyer 345/115kV Project Per SPP-NTC-200343 (Total Project E&C Cost Shown).	Previously Allocated		$17,838,846
Woodward - GEN-2011-051 Tap - Tatonga 345kV CKT 2 Build second 345kV circuit from Woodward - Tatonga @ 3000 amps per ITP10.	Previously Allocated		$71,876,622
	Current Study Total	$59,903,958	
GEN-2014-038			
Beaver County - Grapevine 345kV CKT 1 Build approximately 75 miles of new 345kV from Beaver County - Grapevine.	Current Study	$24,199,165	$75,000,000
Chisholm Substation Upgrade 345kV Expand planned Chisholm Substation to tap and terminate Woodward - Border 345kV into the Chisholm Substation.	Current Study	$1,099,121	$12,000,000
GEN-2014-038 Interconnection Costs See One-Line Diagram.	Current Study	$12,542,886	$12,542,886
Grapevine - Chisholm 345kV CKT 1 Build approximately 75 miles of new 345kV from Grapevine - Chisholm.	Current Study	$8,405,059	$75,000,000
Grapevine Substation Upgrade 345kV Build Grapevine Substation and terminate Beaver Co - Grapevine, Potter Co - Grapevine, Grapevine - Chisholm 345kV into the Grapevine Substation.	Current Study	$1,344,809	$12,000,000
Potter County Interchange 345/230/13kV Transformer CKT 2 Build second 345/230/13kV transformer at Potter County	Current Study	$4,665,603	$15,000,000
Beaver County 345kV Reactive Power Support Install 75Mvar SVC at Beaver County Substation.	Previously Allocated		$21,823,556
Chisholm - Gracemont 345kV CKT 1 Per SPP-NTC-200255 and 200240 (Total Project E&C Cost Shown)	Previously Allocated		$162,952,357
FPL Switch - Mooreland 138kV CKT 1 Rebuild approximately 0.2 miles of 138kV line	Previously Allocated		$820,000
FPL Switch - Woodward 138kV CKT 1 Rebuild approximately 12 miles of 138kV line	Previously Allocated		$8,499,000
Mathewson - Cimarron 345kV CKT 2 Build second 345kV circuit from Matthewson - Cimarron @ 3000 amps per ITP10.	Previously Allocated		$42,903,753
Tatonga - Mathewson 345kV CKT 2 Build second 345kV circuit from Tatonga - Matthewson @ 3000 amps per ITP10.	Previously Allocated		$104,260,473
Walkemeyer Tap - Walkemeyer 345/115kV Project Per SPP-NTC-200343 (Total Project E&C Cost Shown).	Previously Allocated		$17,838,846

* Withdrawal of higher queued projects will cause a restudy and may result in higher costs

Interconnection Request and Upgrades	Upgrade Type	Allocated Cost	Upgrade Cost
Woodward - GEN-2011-051 Tap - Tatonga 345kV CKT 2 Build second 345kV circuit from Woodward - Tatonga @ 3000 amps per ITP10.	Previously Allocated		$71,876,622
	Current Study Total	$52,256,643	
GEN-2014-046			
Border - Chisholm 345kV CKT 2 Build approximately 25 miles of second circuit 345kV from Border - Chisholm	Current Study	$2,139,612	$25,000,000
Border 345kV Reactive Power Support Install 200Mvar Capacitor Bank(s) and +200Mvar SVC at Border Substation.	Current Study	$2,551,875	$30,000,000
Carlsbad Interchange - Pecos Interchange 115kV CKT 1 NRIS only required upgrade: Upgrade terminal equipment	Current Study	$200,000	$200,000
Chisholm - Elk City 230kV CKT 1 Rebuild approximately 15 miles of 230kV from Chisholm - Elk City.	Current Study	$1,381,712	$15,000,000
Chisholm Substation Upgrade 345kV Expand planned Chisholm Substation to tap and terminate Woodward - Border 345kV into the Chisholm Substation.	Current Study	$676,931	$12,000,000
Elk City 230/138/13kV Transformer CKT 1 Replace terminal equipment for Elk City Transformer to achieve transformer limit of 450MVA.	Current Study	$1,381,712	$15,000,000
GEN-2014-046 Interconnection Costs See One-Line Diagram.	Current Study	$1,016,368	$1,016,368
Grapevine - Chisholm 345kV CKT 1 Build approximately 75 miles of new 345kV from Grapevine - Chisholm.	Current Study	$4,990,643	$75,000,000
Grapevine Substation Upgrade 345kV Build Grapevine Substation and terminate Beaver Co - Grapevine, Potter Co - Grapevine, Grapevine - Chisholm 345kV into the Grapevine Substation.	Current Study	$798,503	$12,000,000
Oklaunion 345kV Reactive Power Support Incremental Upgrade Install additional +100Mvar SVC at Oklaunion.	Current Study	$1,711,690	$20,000,000
Pleasant Hill - Potter County 345kV CKT 1 Build approximately 125 miles of 345kV from Pleasant Hill - Potter County	Current Study	$13,893,106	$125,000,000
Pleasant Hill 345/230/13kV Tranformer CKT 1 Build 345/230/13kV transformer at Pleasant Hill	Current Study	$1,343,103	$15,000,000
Potter County - Grapevine 345kV CKT 1 Build approximately 65 miles of new 345kV from Potter County - Grapevine.	Current Study	$6,627,035	$65,000,000
Potter County Interchange 345/230/13kV Transformer CKT 2 Build second 345/230/13kV transformer at Potter County	Current Study	$623,512	$15,000,000

* Withdrawal of higher queued projects will cause a restudy and may result in higher costs

Interconnection Request and Upgrades	Upgrade Type	Allocated Cost	Upgrade Cost
Tolk - Pleasant Hill 345kV CKT 1 Build approximately 50 miles of 345kV from Tolk - Pleasant Hill	Current Study	$5,514,236	$50,000,000
TUCO 2 - Border 345kV CKT 2 Build approximately 194 miles of second circuit 345kV from TUCO 2 - Border	Current Study	$16,603,391	$194,000,000
TUCO 2 - Yoakum 345kV Retermination Incremental Upgrade for SPP-NTC-200283 to reterminate TUCO terminal to TUCO 2 terminal by adding approximately 3 miles of 345kV	Current Study	$500,323	$5,000,000
Amoco Wasson - Oxy Tap 230kV CKT 1 Replace line traps at both terminals	Previously Allocated		$200,000
Chaves County - Price - CV Pines - Capitan 115kV CKT 1 NRIS only required upgrade: Per HPILs SPP-NTC-200256 (Total Project E&C Cost Shown)	Previously Allocated		$14,275,000
Chisholm - Gracemont 345kV CKT 1 Per SPP-NTC-200255 and 200240 (Total Project E&C Cost Shown)	Previously Allocated		$162,952,357
National Enrichment Plant-Targa 115kV CKT 1 Rebuild approximately 4 miles of 115kV from National Enrichment Plant to Targa per 2015 ITPNT.	Previously Allocated		$2,909,669
Oklaunion 345kV Reactive Power Support Install 110Mvar Capacitor Bank(s) and +50Mvar/-50Mvar SVC at Oklaunion.	Previously Allocated		$25,000,000
Potash Junction 230/115 kV Ckt 1 Per HPILs SPP-NTC-200282 (Total Project E&C Cost Shown)	Previously Allocated		$3,508,346
Targa-Cardinal 115kV CKT 1 Rebuild approximately 3 miles of 115kV from Targa to Cardinal per 2015 ITPNT.	Previously Allocated		$2,049,062
Tolk - Plant X 230kV CKT 3 Build a 3rd circuit betweek Tolk - Plant X 230kV	Previously Allocated		$20,000,000
TUCO 2 Substation Upgrade 345/230kV Tap Border-TUCO approximately 2 miles from TUCO and build TUCO 2 345kV substation and add 345/230/13.2kV transformer and tie on TUCO-Swisher 230kV.	Previously Allocated		$18,000,000
TUCO Interchange - TUCO 2 230kV CKT 1 Replace wave trap at TUCO	Previously Allocated		$1,000,000
TUCO Interchange - Yoakum - Hobbs 345/230kV Project Per HPILs SPP-NTC-200283 (Total Project E&C Cost Shown)	Previously Allocated		$241,826,483
	Current Study Total	$61,953,751	

GEN-2014-059

GEN-2014-059 Interconnection Costs See One-Line Diagram.	Current Study	$9,200,000	$9,200,000

* Withdrawal of higher queued projects will cause a restudy and may result in higher costs

Interconnection Request and Upgrades	Upgrade Type	Allocated Cost	Upgrade Cost
GEN-2014-059 Tap - Ogallala 230kV CKT 1 Replace terminal equipment and increase line clearance. ERIS upgrade for GEN-2014-059. NRIS upgrade for GEN-2014-023.	Current Study	$2,968,726	$3,000,000
Gerald Gentleman Station Flowgate Stability Limit Mitigation Mitigation for GGS Flowgate Stability Limit. TBD in the Facilities Study with NPPD.	Current Study	$TBD	$TBD
Battle Creek-County Line 115kV CKT 1 Rebuild approximately 11 miles of 115kV from Battle Creek to County Line.	Previously Allocated		$4,000,000
County Line-Neligh East 115kV CKT 1 Rebuild approximately 12 miles of 115kV from County Line to Neligh East.	Previously Allocated		$8,050,000
Hoskins - Neligh 345/115kV Projects Per SPP 2014 ITP NT and NTC 200253 for 6/1/2016 in-service.	Previously Allocated		$98,697,720
Stegall - Scottsbluff 115kV CKT 1 NRIS only required upgrade: Install Stegall 345/115kV transformer and build a new 22 mile 115kV line from Stegall - Scottsbluff. SPP-NTC-200253.	Previously Allocated		$35,000,000
Thedford 345/115kV Transformer CKT 1 Install Thedford 345/115kV transformer (Total Project E&C Cost Shown). SPP-NTC-200277.	Previously Allocated		$10,236,800
	Current Study Total	$12,168,726*	
GEN-2014-060			
GEN-2014-060 Interconnection Costs See One-Line Diagram.	Current Study	$6,300,000	$6,300,000
Battle Creek-County Line 115kV CKT 1 Rebuild approximately 11 miles of 115kV from Battle Creek to County Line.	Previously Allocated		$4,000,000
County Line-Neligh East 115kV CKT 1 Rebuild approximately 12 miles of 115kV from County Line to Neligh East.	Previously Allocated		$8,050,000
Hoskins - Neligh 345/115kV Projects Per SPP 2014 ITP NT and NTC 200253 for 6/1/2016 in-service.	Previously Allocated		$98,697,720
Thedford 345/115kV Transformer CKT 1 Install Thedford 345/115kV transformer (Total Project E&C Cost Shown). SPP-NTC-200277.	Previously Allocated		$10,236,800
	Current Study Total	$6,300,000	
GEN-2014-065			
Border - Chisholm 345kV CKT 2 Build approximately 25 miles of second circuit 345kV from Border - Chisholm	Current Study	$1,951,803	$25,000,000
Border 345kV Reactive Power Support Install 200Mvar Capacitor Bank(s) and +200Mvar SVC at Border Substation.	Current Study	$2,191,879	$30,000,000

* Withdrawal of higher queued projects will cause a restudy and may result in higher costs

Interconnection Request and Upgrades	Upgrade Type	Allocated Cost	Upgrade Cost
Chisholm - Elk City 230kV CKT 1 Rebuild approximately 15 miles of 230kV from Chisholm - Elk City.	Current Study	$1,084,871	$15,000,000
Chisholm Substation Upgrade 345kV Expand planned Chisholm Substation to tap and terminate Woodward - Border 345kV into the Chisholm Substation.	Current Study	$617,564	$12,000,000
Elk City 230/138/13kV Transformer CKT 1 Replace terminal equipment for Elk City Transformer to achieve transformer limit of 450MVA.	Current Study	$1,084,871	$15,000,000
GEN-2014-065 Interconnection Costs See One-Line Diagram.	Current Study	$7,542,402	$7,542,402
Grapevine - Chisholm 345kV CKT 1 Build approximately 75 miles of new 345kV from Grapevine - Chisholm.	Current Study	$3,165,447	$75,000,000
Grapevine Substation Upgrade 345kV Build Grapevine Substation and terminate Beaver Co - Grapevine, Potter Co - Grapevine, Grapevine - Chisholm 345kV into the Grapevine Substation.	Current Study	$506,471	$12,000,000
Ochoa - Ponderosa Tap 115kv CKT 1 Rebuild approximately 9.1 miles of 115kV	Current Study	$6,825,000	$6,825,000
Oklaunion 345kV Reactive Power Support Incremental Upgrade Install additional +100Mvar SVC at Oklaunion.	Current Study	$1,561,442	$20,000,000
Pleasant Hill - Potter County 345kV CKT 1 Build approximately 125 miles of 345kV from Pleasant Hill - Potter County	Current Study	$8,409,981	$125,000,000
Pleasant Hill 345/230/13kV Tranformer CKT 1 Build 345/230/13kV transformer at Pleasant Hill	Current Study	$441,449	$15,000,000
Potter County - Grapevine 345kV CKT 1 Build approximately 65 miles of new 345kV from Potter County - Grapevine.	Current Study	$4,204,358	$65,000,000
Potter County Interchange 345/230/13kV Transformer CKT 2 Build second 345/230/13kV transformer at Potter County	Current Study	$696,453	$15,000,000
Tolk - Pleasant Hill 345kV CKT 1 Build approximately 50 miles of 345kV from Tolk - Pleasant Hill	Current Study	$5,694,290	$50,000,000
TUCO 2 - Border 345kV CKT 2 Build approximately 194 miles of second circuit 345kV from TUCO 2 - Border	Current Study	$15,145,990	$194,000,000
TUCO 2 - Yoakum 345kV Retermination Incremental Upgrade for SPP-NTC-200283 to reterminate TUCO terminal to TUCO 2 terminal by adding approximately 3 miles of 345kV	Current Study	$610,941	$5,000,000
Agave Hill 115kV Reactive Power Support Build Agave Hill 28.8Mvar Capacitor bank per 2015 ITPNT.	Previously Allocated		$1,619,280

* Withdrawal of higher queued projects will cause a restudy and may result in higher costs

Interconnection Request and Upgrades	Upgrade Type	Allocated Cost	Upgrade Cost
Amoco Wasson - Oxy Tap 230kV CKT 1 Replace line traps at both terminals	Previously Allocated		$200,000
Chisholm - Gracemont 345kV CKT 1 Per SPP-NTC-200255 and 200240 (Total Project E&C Cost Shown)	Previously Allocated		$162,952,357
National Enrichment Plant-Targa 115kV CKT 1 Rebuild approximately 4 miles of 115kV from National Enrichment Plant to Targa per 2015 ITPNT.	Previously Allocated		$2,909,669
Ochoa 115kV Reactive Power Support Build Ochoa 28.8Mvar Capacitor bank per 2015 ITPNT.	Previously Allocated		$1,619,280
Oklaunion 345kV Reactive Power Support Install 110Mvar Capacitor Bank(s) and +50Mvar/-50Mvar SVC at Oklaunion.	Previously Allocated		$25,000,000
Ponderosa Tap - Whitten 115kV CKT Per 2015 ITPNT SPP-NTC-C-200324	Previously Allocated		$4,044,971
Potash Junction 230kV Reactive Power Support Build Potash Junction 100Mvar Capacitor bank per 2015 ITPNT.	Previously Allocated		$6,465,875
Targa-Cardinal 115kV CKT 1 Rebuild approximately 3 miles of 115kV from Targa to Cardinal per 2015 ITPNT.	Previously Allocated		$2,049,062
Tolk - Plant X 230kV CKT 3 Build a 3rd circuit betweek Tolk - Plant X 230kV	Previously Allocated		$20,000,000
TUCO 2 Substation Upgrade 345/230kV Tap Border-TUCO approximately 2 miles from TUCO and build TUCO 2 345kV substation and add 345/230/13.2kV transformer and tie on TUCO-Swisher 230kV.	Previously Allocated		$18,000,000
TUCO Interchange - TUCO 2 230kV CKT 1 Replace wave trap at TUCO	Previously Allocated		$1,000,000
TUCO Interchange - Yoakum - Hobbs 345/230kV Project Per HPILs SPP-NTC-200283 (Total Project E&C Cost Shown)	Previously Allocated		$241,826,483
	Current Study Total	$61,735,213	

GEN-2014-068

Bushland Interchange 230/115/13.2kV Transformer CKT 1 NRIS only required upgrade: Replace the existing Bushland 230/115/13.2kV transformer circuit 1	Current Study	$5,000,000	$5,000,000
GEN-2014-068 Interconnection Costs See One-Line Diagram.	Current Study	$8,346,514	$8,346,514
Carlisle - TUCO Interchange 230kV CKT 1 NRIS only required upgrade: Replace terminal equipment per SPP-2012-AG3-AFS-9	Previously Allocated		$702,378

* Withdrawal of higher queued projects will cause a restudy and may result in higher costs

Interconnection Request and Upgrades	Upgrade Type	Allocated Cost	Upgrade Cost
Deaf Smith County Interchange - Panda Energy Substation 115kV CKT 1 NRIS only required upgrade: Rebuild approximately 3.5 miles of 115kV from Deaf Smith County Interchange - Panda Energy Substation per SPP-NTC-200326	Previously Allocated		$3,034,643
	Current Study Total	$13,346,514	
GEN-2014-074			
Border - Chisholm 345kV CKT 2 Build approximately 25 miles of second circuit 345kV from Border - Chisholm	Current Study	$3,193,162	$25,000,000
Border 345kV Reactive Power Support Install 200Mvar Capacitor Bank(s) and +200Mvar SVC at Border Substation.	Current Study	$6,424,019	$30,000,000
Chisholm - Elk City 230kV CKT 1 Rebuild approximately 15 miles of 230kV from Chisholm - Elk City.	Current Study	$1,230,357	$15,000,000
Chisholm Substation Upgrade 345kV Expand planned Chisholm Substation to tap and terminate Woodward - Border 345kV into the Chisholm Substation.	Current Study	$1,010,269	$12,000,000
Elk City 230/138/13kV Transformer CKT 1 Replace terminal equipment for Elk City Transformer to achieve transformer limit of 450MVA.	Current Study	$1,230,357	$15,000,000
GEN-2014-074 Interconnection Costs See One-Line Diagram.	Current Study	$13,519,992	$13,519,992
GEN-2014-074 Tap 345kV Reactive Power Support Install -30Mvar SVC at Oklaunion.	Current Study	$15,000,000	$15,000,000
Grapevine - Chisholm 345kV CKT 1 Build approximately 75 miles of new 345kV from Grapevine - Chisholm.	Current Study	$1,334,588	$75,000,000
Grapevine Substation Upgrade 345kV Build Grapevine Substation and terminate Beaver Co - Grapevine, Potter Co - Grapevine, Grapevine - Chisholm 345kV into the Grapevine Substation.	Current Study	$213,534	$12,000,000
LES - GEN-2014-057 Tap - Sunnyside 345kV CKT 1 Replace terminal equipment	Current Study	$250,000	$250,000
Oklaunion 345kV Reactive Power Support Incremental Upgrade Install additional +100Mvar SVC at Oklaunion.	Current Study	$2,554,530	$20,000,000
Pleasant Hill - Potter County 345kV CKT 1 Build approximately 125 miles of 345kV from Pleasant Hill - Potter County	Current Study	$5,344,128	$125,000,000
Pleasant Hill 345/230/13kV Tranformer CKT 1 Build 345/230/13kV transformer at Pleasant Hill	Current Study	$327,825	$15,000,000
Potter County - Grapevine 345kV CKT 1 Build approximately 65 miles of new 345kV from Potter County - Grapevine.	Current Study	$1,772,725	$65,000,000

* Withdrawal of higher queued projects will cause a restudy and may result in higher costs

Interconnection Request and Upgrades	Upgrade Type	Allocated Cost	Upgrade Cost
Potter County Interchange 345/230/13kV Transformer CKT 2 Build second 345/230/13kV transformer at Potter County	Current Study	$862,702	$15,000,000
Tolk - Pleasant Hill 345kV CKT 1 Build approximately 50 miles of 345kV from Tolk - Pleasant Hill	Current Study	$3,318,456	$50,000,000
TUCO 2 - Border 345kV CKT 2 Build approximately 194 miles of second circuit 345kV from TUCO 2 - Border	Current Study	$24,778,940	$194,000,000
TUCO 2 - Yoakum 345kV Retermination Incremental Upgrade for SPP-NTC-200283 to reterminate TUCO terminal to TUCO 2 terminal by adding approximately 3 miles of 345kV	Current Study	$248,431	$5,000,000
Agave Hill 115kV Reactive Power Support Build Agave Hill 28.8Mvar Capacitor bank per 2015 ITPNT.	Previously Allocated		$1,619,280
Carlisle - TUCO Interchange 230kV CKT 1 NRIS only required upgrade: Replace terminal equipment per SPP-2012-AG3-AFS-9	Previously Allocated		$702,378
Carlisle 230/115/13kV Transformer CKT 1 Replace existing Carlisle 230/115/13kV Transformer circuit #1.	Previously Allocated		$5,000,000
Chisholm - Gracemont 345kV CKT 1 Per SPP-NTC-200255 and 200240 (Total Project E&C Cost Shown)	Previously Allocated		$162,952,357
Ochoa 115kV Reactive Power Support Build Ochoa 28.8Mvar Capacitor bank per 2015 ITPNT.	Previously Allocated		$1,619,280
Oklaunion 345kV Reactive Power Support Install 110Mvar Capacitor Bank(s) and +50Mvar/-50Mvar SVC at Oklaunion.	Previously Allocated		$25,000,000
Potash Junction 230/115 kV Ckt 1 Per HPILs SPP-NTC-200282 (Total Project E&C Cost Shown)	Previously Allocated		$3,508,346
Potash Junction 230kV Reactive Power Support Build Potash Junction 100Mvar Capacitor bank per 2015 ITPNT.	Previously Allocated		$6,465,875
Tolk - Plant X 230kV CKT 3 Build a 3rd circuit betweek Tolk - Plant X 230kV	Previously Allocated		$20,000,000
TUCO 2 Substation Upgrade 345/230kV Tap Border-TUCO approximately 2 miles from TUCO and build TUCO 2 345kV substation and add 345/230/13.2kV transformer and tie on TUCO-Swisher 230kV.	Previously Allocated		$18,000,000
TUCO Interchange - TUCO 2 230kV CKT 1 Replace wave trap at TUCO	Previously Allocated		$1,000,000
TUCO Interchange - Yoakum - Hobbs 345/230kV Project Per HPILs SPP-NTC-200283 (Total Project E&C Cost Shown)	Previously Allocated		$241,826,483
	Current Study Total	$82,614,016	

* Withdrawal of higher queued projects will cause a restudy and may result in higher costs

Interconnection Request and Upgrades	Upgrade Type	Allocated Cost	Upgrade Cost
GEN-2015-001			
GEN-2015-001 Interconnection Costs See One-Line Diagram.	Current Study	$2,250,100	$2,250,100
Fairfax 138/69kV CKT 1 Per AECI Affected System Study for DISIS-2012-002	Previously Allocated		$2,200,000
Remington - Fairfax 138KV CKT 1 Increase conductor clearance	Previously Allocated		$400,000
	Current Study Total	$2,250,100	
GEN-2015-003			
GEN-2015-003 Interconnection Costs See One-Line Diagram.	Current Study	$2,250,100	$2,250,100
Viola 345/138kV Transformer CKT 2 Build second 345/138/13.8kV transformer at Viola.	Current Study	$15,000,000	$15,000,000
Clearwater - Viola 138kV CKT 1 Per SPP 2013 ITP NT and SPP-NTC-200213 for 6/1/2018 in-service.	Previously Allocated		$40,525,225
Fairfax 138/69kV CKT 1 Per AECI Affected System Study for DISIS-2012-002	Previously Allocated		$2,200,000
Remington - Fairfax 138KV CKT 1 Increase conductor clearance	Previously Allocated		$400,000
Viola - Sumner County 138kV CKT 1 Per SPP 2014 ITP NT and SPP-NTC-200296 for 6/1/2019 in-service.	Previously Allocated		$51,513,963
Viola 345/138 kV Transformer CKT 1 Per SPP 2013 ITP NT and SPP-NTC-200213 for 6/1/2018 in-service.	Previously Allocated		$15,402,744
	Current Study Total	$17,250,100	
GEN-2015-004			
Chisholm Substation Upgrade 345kV Expand planned Chisholm Substation to tap and terminate Woodward - Border 345kV into the Chisholm Substation.	Current Study	$1,029,925	$12,000,000
GEN-2015-004 Interconnection Costs See One-Line Diagram.	Current Study	$0	$0
Chisholm - Gracemont 345kV CKT 1 Per SPP-NTC-200255 and 200240 (Total Project E&C Cost Shown)	Previously Allocated		$162,952,357
	Current Study Total	$1,029,925	

* Withdrawal of higher queued projects will cause a restudy and may result in higher costs

Interconnection Request and Upgrades	Upgrade Type	Allocated Cost	Upgrade Cost
GEN-2015-005			
GEN-2015-005 Interconnection Costs See One-Line Diagram.	Current Study	$18,262,000	$18,262,000
Nebraska City - Sibley 345kV CKT 1 Priority Project: Nebraska City - Mullin Creek - Sibley 345kV circuit 1 per NTC (SPP-NTC-20097 and SPP-NTC-20098. (Total Project E&C Cost Shown).	Previously Allocated		$407,764,364
	Current Study Total	$18,262,000	
GEN-2015-006			
Beaver County - Grapevine 345kV CKT 1 Build approximately 75 miles of new 345kV from Beaver County - Grapevine.	Current Study	$23,381,280	$75,000,000
Chisholm Substation Upgrade 345kV Expand planned Chisholm Substation to tap and terminate Woodward - Border 345kV into the Chisholm Substation.	Current Study	$851,787	$12,000,000
GEN-2015-006 Interconnection Costs See One-Line Diagram.	Current Study	$2,270,100	$2,270,100
Grapevine - Chisholm 345kV CKT 1 Build approximately 75 miles of new 345kV from Grapevine - Chisholm.	Current Study	$8,120,984	$75,000,000
Grapevine Substation Upgrade 345kV Build Grapevine Substation and terminate Beaver Co - Grapevine, Potter Co - Grapevine, Grapevine - Chisholm 345kV into the Grapevine Substation.	Current Study	$1,299,357	$12,000,000
Beaver County 345kV Reactive Power Support Install 75Mvar SVC at Beaver County Substation.	Previously Allocated		$21,823,556
Chisholm - Gracemont 345kV CKT 1 Per SPP-NTC-200255 and 200240 (Total Project E&C Cost Shown)	Previously Allocated		$162,952,357
FPL Switch - Mooreland 138kV CKT 1 Rebuild approximately 0.2 miles of 138kV line	Previously Allocated		$820,000
FPL Switch - Woodward 138kV CKT 1 Rebuild approximately 12 miles of 138kV line	Previously Allocated		$8,499,000
Mathewson - Cimarron 345kV CKT 2 Build second 345kV circuit from Matthewson - Cimarron @ 3000 amps per ITP10.	Previously Allocated		$42,903,753
Tatonga - Mathewson 345kV CKT 2 Build second 345kV circuit from Tatonga - Matthewson @ 3000 amps per ITP10.	Previously Allocated		$104,260,473
Walkemeyer Tap - Walkemeyer 345/115kV Project Per SPP-NTC-200343 (Total Project E&C Cost Shown).	Previously Allocated		$17,838,846
Woodward - GEN-2011-051 Tap - Tatonga 345kV CKT 2 Build second 345kV circuit from Woodward - Tatonga @ 3000 amps per ITP10.	Previously Allocated		$71,876,622

* Withdrawal of higher queued projects will cause a restudy and may result in higher costs

Interconnection Request and Upgrades	Upgrade Type	Allocated Cost	Upgrade Cost
	Current Study Total	$35,923,508	
GEN-2015-007			
GEN-2015-007 Interconnection Costs See One-Line Diagram.	Current Study	$5,300,000	$5,300,000
Gentleman - Thedford 345kV CKT 1 Build approximately 76 Miles of 345kV from Gentleman to Thedford. (Total Project E&C Cost Shown).	Previously Allocated		$313,376,623
Thedford - Holt County 345kV CKT 1 Build approximately 146 Miles of 345kV from Thedford to Holt County. (Total Project E&C Cost Shown).	Previously Allocated		$313,376,623
Twin Church - Dixon County 230kV Increase conductor clearances to accommodate 320MVA facility rating	Previously Allocated		$100,000
	Current Study Total	$5,300,000	
GEN-2015-008			
Albion - Petersburg - North Petersburg 115kV CKT 1 Reconductor 115kV lines and replace all terminal equipment for at least a 193MVA rate.	Current Study	$2,639,316	$3,500,000
Battle Creek - Norfolk 115kV CKT 1 Rebuild approximately 10 miles of 115kV from Norfolk - Battle Creek.	Current Study	$4,000,000	$4,000,000
Bloomfield - Gavins 115kV CKT 1 Rebuild approximately 17 miles of 115kV from Gavins - Bloomfield.	Current Study	$20,000,000	$20,000,000
GEN-2014-059 Tap - Ogallala 230kV CKT 1 Replace terminal equipment and increase line clearance. ERIS upgrade for GEN-2014-059. NRIS upgrade for GEN-2014-023.	Current Study	$13,158	$3,000,000
GEN-2015-008 Interconnection Costs See One-Line Diagram.	Current Study	$1,000,000	$1,000,000
Battle Creek-County Line 115kV CKT 1 Rebuild approximately 11 miles of 115kV from Battle Creek to County Line.	Previously Allocated		$4,000,000
County Line-Neligh East 115kV CKT 1 Rebuild approximately 12 miles of 115kV from County Line to Neligh East.	Previously Allocated		$8,050,000
Gentleman - Thedford 345kV CKT 1 Build approximately 76 Miles of 345kV from Gentleman to Thedford. (Total Project E&C Cost Shown).	Previously Allocated		$313,376,623
Hoskins - Neligh 345/115kV Projects Per SPP 2014 ITP NT and NTC 200253 for 6/1/2016 in-service.	Previously Allocated		$98,697,720
Thedford - Holt County 345kV CKT 1 Build approximately 146 Miles of 345kV from Thedford to Holt County. (Total Project E&C Cost Shown).	Previously Allocated		$313,376,623

* Withdrawal of higher queued projects will cause a restudy and may result in higher costs

Interconnection Request and Upgrades	Upgrade Type	Allocated Cost	Upgrade Cost
Twin Church - Dixon County 230kV Increase conductor clearances to accommodate 320MVA facility rating	Previously Allocated		$100,000
	Current Study Total	$27,652,474	
GEN-2015-009			
Border - Chisholm 345kV CKT 2 Build approximately 25 miles of second circuit 345kV from Border - Chisholm	Current Study	$6,008,236	$25,000,000
Border 345kV Reactive Power Support Install 200Mvar Capacitor Bank(s) and +200Mvar SVC at Border Substation.	Current Study	$6,704,696	$30,000,000
Chisholm - Elk City 230kV CKT 1 Rebuild approximately 15 miles of 230kV from Chisholm - Elk City.	Current Study	$3,285,366	$15,000,000
Chisholm Substation Upgrade 345kV Expand planned Chisholm Substation to tap and terminate Woodward - Border 345kV into the Chisholm Substation.	Current Study	$1,900,911	$12,000,000
Cunningham Station - Maddox Station 115kV CKT 1 NRIS only required upgrade: Rebuild approximately 3 miles of 115kV line.	Current Study	$1,914,000	$1,914,000
Elk City 230/138/13kV Transformer CKT 1 Replace terminal equipment for Elk City Transformer to achieve transformer limit of 450MVA.	Current Study	$3,285,366	$15,000,000
GEN-2015-009 Interconnection Costs See One-Line Diagram.	Current Study	$1,301,825	$1,301,825
Grapevine - Chisholm 345kV CKT 1 Build approximately 75 miles of new 345kV from Grapevine - Chisholm.	Current Study	$9,320,658	$75,000,000
Grapevine Substation Upgrade 345kV Build Grapevine Substation and terminate Beaver Co - Grapevine, Potter Co - Grapevine, Grapevine - Chisholm 345kV into the Grapevine Substation.	Current Study	$1,491,305	$12,000,000
Oklaunion 345kV Reactive Power Support Incremental Upgrade Install additional +100Mvar SVC at Oklaunion.	Current Study	$4,806,589	$20,000,000
Pleasant Hill - Potter County 345kV CKT 1 Build approximately 125 miles of 345kV from Pleasant Hill - Potter County	Current Study	$24,636,333	$125,000,000
Pleasant Hill 345/230/13kV Tranformer CKT 1 Build 345/230/13kV transformer at Pleasant Hill	Current Study	$1,306,956	$15,000,000
Potter County - Grapevine 345kV CKT 1 Build approximately 65 miles of new 345kV from Potter County - Grapevine.	Current Study	$12,377,125	$65,000,000
Potter County Interchange 345/230/13kV Transformer CKT 2 Build second 345/230/13kV transformer at Potter County	Current Study	$2,169,740	$15,000,000

* Withdrawal of higher queued projects will cause a restudy and may result in higher costs

Interconnection Request and Upgrades	Upgrade Type	Allocated Cost	Upgrade Cost
Tolk - Pleasant Hill 345kV CKT 1 Build approximately 50 miles of 345kV from Tolk - Pleasant Hill	Current Study	$16,593,642	$50,000,000
TUCO 2 - Border 345kV CKT 2 Build approximately 194 miles of second circuit 345kV from TUCO 2 - Border	Current Study	$46,623,914	$194,000,000
TUCO 2 - Yoakum 345kV Retermination Incremental Upgrade for SPP-NTC-200283 to reterminate TUCO terminal to TUCO 2 terminal by adding approximately 3 miles of 345kV	Current Study	$1,964,525	$5,000,000
Agave Hill 115kV Reactive Power Support Build Agave Hill 28.8Mvar Capacitor bank per 2015 ITPNT.	Previously Allocated		$1,619,280
Amoco Wasson - Oxy Tap 230kV CKT 1 Replace line traps at both terminals	Previously Allocated		$200,000
Chisholm - Gracemont 345kV CKT 1 Per SPP-NTC-200255 and 200240 (Total Project E&C Cost Shown)	Previously Allocated		$162,952,357
Ochoa 115kV Reactive Power Support Build Ochoa 28.8Mvar Capacitor bank per 2015 ITPNT.	Previously Allocated		$1,619,280
Oklaunion 345kV Reactive Power Support Install 110Mvar Capacitor Bank(s) and +50Mvar/-50Mvar SVC at Oklaunion.	Previously Allocated		$25,000,000
Potash Junction 230/115 kV Ckt 1 Per HPILs SPP-NTC-200282 (Total Project E&C Cost Shown)	Previously Allocated		$3,508,346
Potash Junction 230kV Reactive Power Support Build Potash Junction 100Mvar Capacitor bank per 2015 ITPNT.	Previously Allocated		$6,465,875
Tolk - Plant X 230kV CKT 3 Build a 3rd circuit betweek Tolk - Plant X 230kV	Previously Allocated		$20,000,000
TUCO 2 Substation Upgrade 345/230kV Tap Border-TUCO approximately 2 miles from TUCO and build TUCO 2 345kV substation and add 345/230/13.2kV transformer and tie on TUCO-Swisher 230kV.	Previously Allocated		$18,000,000
TUCO Interchange - TUCO 2 230kV CKT 1 Replace wave trap at TUCO	Previously Allocated		$1,000,000
TUCO Interchange - Yoakum - Hobbs 345/230kV Project Per HPILs SPP-NTC-200283 (Total Project E&C Cost Shown)	Previously Allocated		$241,826,483
	Current Study Total	$145,691,185	

GEN-2015-010

Border - Chisholm 345kV CKT 2 Build approximately 25 miles of second circuit 345kV from Border - Chisholm	Current Study	$3,796,560	$25,000,000

* Withdrawal of higher queued projects will cause a restudy and may result in higher costs

Interconnection Request and Upgrades	Upgrade Type	Allocated Cost	Upgrade Cost
Border 345kV Reactive Power Support Install 200Mvar Capacitor Bank(s) and +200Mvar SVC at Border Substation.	Current Study	$4,778,627	$30,000,000
Chisholm - Elk City 230kV CKT 1 Rebuild approximately 15 miles of 230kV from Chisholm - Elk City.	Current Study	$2,775,182	$15,000,000
Chisholm Substation Upgrade 345kV Expand planned Chisholm Substation to tap and terminate Woodward - Border 345kV into the Chisholm Substation.	Current Study	$1,201,143	$12,000,000
Elk City 230/138/13kV Transformer CKT 1 Replace terminal equipment for Elk City Transformer to achieve transformer limit of 450MVA.	Current Study	$2,775,182	$15,000,000
GEN-2015-010 Interconnection Costs See One-Line Diagram.	Current Study	$6,166,348	$6,166,348
Grapevine - Chisholm 345kV CKT 1 Build approximately 75 miles of new 345kV from Grapevine - Chisholm.	Current Study	$11,323,716	$75,000,000
Grapevine Substation Upgrade 345kV Build Grapevine Substation and terminate Beaver Co - Grapevine, Potter Co - Grapevine, Grapevine - Chisholm 345kV into the Grapevine Substation.	Current Study	$1,811,795	$12,000,000
Oklaunion 345kV Reactive Power Support Incremental Upgrade Install additional +100Mvar SVC at Oklaunion.	Current Study	$3,037,248	$20,000,000
Pleasant Hill - Potter County 345kV CKT 1 Build approximately 125 miles of 345kV from Pleasant Hill - Potter County	Current Study	$30,623,662	$125,000,000
Pleasant Hill 345/230/13kV Tranformer CKT 1 Build 345/230/13kV transformer at Pleasant Hill	Current Study	$5,219,049	$15,000,000
Potter County - Grapevine 345kV CKT 1 Build approximately 65 miles of new 345kV from Potter County - Grapevine.	Current Study	$15,035,382	$65,000,000
Potter County Interchange 345/230/13kV Transformer CKT 2 Build second 345/230/13kV transformer at Potter County	Current Study	$1,261,224	$15,000,000
Tolk - Pleasant Hill 345kV CKT 1 Build approximately 50 miles of 345kV from Tolk - Pleasant Hill	Current Study	$2,167,642	$50,000,000
TUCO 2 - Border 345kV CKT 2 Build approximately 194 miles of second circuit 345kV from TUCO 2 - Border	Current Study	$29,461,307	$194,000,000
TUCO 2 - Yoakum 345kV Retermination Incremental Upgrade for SPP-NTC-200283 to reterminate TUCO terminal to TUCO 2 terminal by adding approximately 3 miles of 345kV	Current Study	$506,932	$5,000,000
Chisholm - Gracemont 345kV CKT 1 Per SPP-NTC-200255 and 200240 (Total Project E&C Cost Shown)	Previously Allocated		$162,952,357

* Withdrawal of higher queued projects will cause a restudy and may result in higher costs

Interconnection Request and Upgrades	Upgrade Type	Allocated Cost	Upgrade Cost
National Enrichment Plant-Targa 115kV CKT 1 Rebuild approximately 4 miles of 115kV from National Enrichment Plant to Targa per 2015 ITPNT.	Previously Allocated		$2,909,669
Oklaunion 345kV Reactive Power Support Install 110Mvar Capacitor Bank(s) and +50Mvar/-50Mvar SVC at Oklaunion.	Previously Allocated		$25,000,000
Potash Junction 230/115 kV Ckt 1 Per HPILs SPP-NTC-200282 (Total Project E&C Cost Shown)	Previously Allocated		$3,508,346
Targa-Cardinal 115kV CKT 1 Rebuild approximately 3 miles of 115kV from Targa to Cardinal per 2015 ITPNT.	Previously Allocated		$2,049,062
Tolk - Plant X 230kV CKT 3 Build a 3rd circuit betweek Tolk - Plant X 230kV	Previously Allocated		$20,000,000
TUCO 2 Substation Upgrade 345/230kV Tap Border-TUCO approximately 2 miles from TUCO and build TUCO 2 345kV substation and add 345/230/13.2kV transformer and tie on TUCO-Swisher 230kV.	Previously Allocated		$18,000,000
TUCO Interchange - TUCO 2 230kV CKT 1 Replace wave trap at TUCO	Previously Allocated		$1,000,000
TUCO Interchange - Yoakum - Hobbs 345/230kV Project Per HPILs SPP-NTC-200283 (Total Project E&C Cost Shown)	Previously Allocated		$241,826,483
	Current Study Total	$121,940,999	
GEN-2015-013			
Chisholm Substation Upgrade 345kV Expand planned Chisholm Substation to tap and terminate Woodward - Border 345kV into the Chisholm Substation.	Current Study	$12,296	$12,000,000
GEN-2015-013 Interconnection Costs See One-Line Diagram.	Current Study	$1,000,000	$1,000,000
Chisholm - Gracemont 345kV CKT 1 Per SPP-NTC-200255 and 200240 (Total Project E&C Cost Shown)	Previously Allocated		$162,952,357
FPL Switch - Mooreland 138kV CKT 1 Rebuild approximately 0.2 miles of 138kV line	Previously Allocated		$820,000
FPL Switch - Woodward 138kV CKT 1 Rebuild approximately 12 miles of 138kV line	Previously Allocated		$8,499,000
	Current Study Total	$1,012,296	
GEN-2015-014			
Border - Chisholm 345kV CKT 2 Build approximately 25 miles of second circuit 345kV from Border - Chisholm	Current Study	$3,020,166	$25,000,000

* Withdrawal of higher queued projects will cause a restudy and may result in higher costs

Interconnection Request and Upgrades	Upgrade Type	Allocated Cost	Upgrade Cost
Border 345kV Reactive Power Support Install 200Mvar Capacitor Bank(s) and +200Mvar SVC at Border Substation.	Current Study	$3,369,987	$30,000,000
Chisholm - Elk City 230kV CKT 1 Rebuild approximately 15 miles of 230kV from Chisholm - Elk City.	Current Study	$1,642,417	$15,000,000
Chisholm Substation Upgrade 345kV Expand planned Chisholm Substation to tap and terminate Woodward - Border 345kV into the Chisholm Substation.	Current Study	$955,533	$12,000,000
Elk City 230/138/13kV Transformer CKT 1 Replace terminal equipment for Elk City Transformer to achieve transformer limit of 450MVA.	Current Study	$1,642,417	$15,000,000
GEN-2015-014 Interconnection Costs See One-Line Diagram.	Current Study	$4,773,333	$4,773,333
Grapevine - Chisholm 345kV CKT 1 Build approximately 75 miles of new 345kV from Grapevine - Chisholm.	Current Study	$4,560,399	$75,000,000
Grapevine Substation Upgrade 345kV Build Grapevine Substation and terminate Beaver Co - Grapevine, Potter Co - Grapevine, Grapevine - Chisholm 345kV into the Grapevine Substation.	Current Study	$729,664	$12,000,000
Oklaunion 345kV Reactive Power Support Incremental Upgrade Install additional +100Mvar SVC at Oklaunion.	Current Study	$2,416,132	$20,000,000
Pleasant Hill - Potter County 345kV CKT 1 Build approximately 125 miles of 345kV from Pleasant Hill - Potter County	Current Study	$11,015,082	$125,000,000
Pleasant Hill 345/230/13kV Tranformer CKT 1 Build 345/230/13kV transformer at Pleasant Hill	Current Study	$652,510	$15,000,000
Potter County - Grapevine 345kV CKT 1 Build approximately 65 miles of new 345kV from Potter County - Grapevine.	Current Study	$6,055,878	$65,000,000
Potter County Interchange 345/230/13kV Transformer CKT 2 Build second 345/230/13kV transformer at Potter County	Current Study	$1,334,999	$15,000,000
Tolk - Pleasant Hill 345kV CKT 1 Build approximately 50 miles of 345kV from Tolk - Pleasant Hill	Current Study	$6,986,904	$50,000,000
TUCO 2 - Border 345kV CKT 2 Build approximately 194 miles of second circuit 345kV from TUCO 2 - Border	Current Study	$23,436,485	$194,000,000
TUCO 2 - Yoakum 345kV Retermination Incremental Upgrade for SPP-NTC-200283 to reterminate TUCO terminal to TUCO 2 terminal by adding approximately 3 miles of 345kV	Current Study	$717,024	$5,000,000
Agave Hill 115kV Reactive Power Support Build Agave Hill 28.8Mvar Capacitor bank per 2015 ITPNT.	Previously Allocated		$1,619,280

* Withdrawal of higher queued projects will cause a restudy and may result in higher costs

Interconnection Request and Upgrades	Upgrade Type	Allocated Cost	Upgrade Cost
Amoco Wasson - Oxy Tap 230kV CKT 1 Replace line traps at both terminals	Previously Allocated		$200,000
Chisholm - Gracemont 345kV CKT 1 Per SPP-NTC-200255 and 200240 (Total Project E&C Cost Shown)	Previously Allocated		$162,952,357
Ochoa 115kV Reactive Power Support Build Ochoa 28.8Mvar Capacitor bank per 2015 ITPNT.	Previously Allocated		$1,619,280
Oklaunion 345kV Reactive Power Support Install 110Mvar Capacitor Bank(s) and +50Mvar/-50Mvar SVC at Oklaunion.	Previously Allocated		$25,000,000
Potash Junction 230kV Reactive Power Support Build Potash Junction 100Mvar Capacitor bank per 2015 ITPNT.	Previously Allocated		$6,465,875
Tolk - Plant X 230kV CKT 3 Build a 3rd circuit betweek Tolk - Plant X 230kV	Previously Allocated		$20,000,000
TUCO 2 Substation Upgrade 345/230kV Tap Border-TUCO approximately 2 miles from TUCO and build TUCO 2 345kV substation and add 345/230/13.2kV transformer and tie on TUCO-Swisher 230kV.	Previously Allocated		$18,000,000
TUCO Interchange - TUCO 2 230kV CKT 1 Replace wave trap at TUCO	Previously Allocated		$1,000,000
TUCO Interchange - Yoakum - Hobbs 345/230kV Project Per HPILs SPP-NTC-200283 (Total Project E&C Cost Shown)	Previously Allocated		$241,826,483
	Current Study Total	$73,308,930	
GEN-2015-015			
GEN-2015-015 Interconnection Costs See One-Line Diagram.	Current Study	$3,041,661	$3,041,661
Clearwater - Viola 138kV CKT 1 Per SPP 2013 ITP NT and SPP-NTC-200213 for 6/1/2018 in-service.	Previously Allocated		$40,525,225
Fairfax 138/69kV CKT 1 Per AECI Affected System Study for DISIS-2012-002	Previously Allocated		$2,200,000
Remington - Fairfax 138KV CKT 1 Increase conductor clearance	Previously Allocated		$400,000
Viola - Sumner County 138kV CKT 1 Per SPP 2014 ITP NT and SPP-NTC-200296 for 6/1/2019 in-service.	Previously Allocated		$51,513,963
Viola 345/138 kV Transformer CKT 1 Per SPP 2013 ITP NT and SPP-NTC-200213 for 6/1/2018 in-service.	Previously Allocated		$15,402,744

* Withdrawal of higher queued projects will cause a restudy and may result in higher costs

Interconnection Request and Upgrades	Upgrade Type	Allocated Cost	Upgrade Cost
	Current Study Total	$3,041,661	
GEN-2015-016			
GEN-2015-016 Interconnection Costs See One-Line Diagram.	Current Study	$8,110,000	$8,110,000
Remington - Fairfax 138KV CKT 1 Increase conductor clearance	Previously Allocated		$400,000
	Current Study Total	$8,110,000	
GEN-2015-017			
GEN-2015-017 Interconnection Costs See One-Line Diagram.	Current Study	$3,459,098	$3,459,098
Arnold - Ransom 115kV CKT 1 Replace terminal equipment to achieve at least a 600 amp rating.	Previously Allocated		$3,000,000
Bucker - Spearville 345V CKT 1 Replace Terminal equipment	Previously Allocated		$1,480,238
Mingo 345/115kV Transformer CKT 2 NRIS only required upgrade: Build second 345/115/13.8kV transformer at Mingo per 2015 ITP10 SPP-NTC-200325.	Previously Allocated		$9,842,317
	Current Study Total	$3,459,098	
GEN-2015-018			
Border - Chisholm 345kV CKT 2 Build approximately 25 miles of second circuit 345kV from Border - Chisholm	Current Study	$1,188,491	$25,000,000
Border 345kV Reactive Power Support Install 200Mvar Capacitor Bank(s) and +200Mvar SVC at Border Substation.	Current Study	$1,508,668	$30,000,000
Chisholm - Elk City 230kV CKT 1 Rebuild approximately 15 miles of 230kV from Chisholm - Elk City.	Current Study	$887,135	$15,000,000
Chisholm Substation Upgrade 345kV Expand planned Chisholm Substation to tap and terminate Woodward - Border 345kV into the Chisholm Substation.	Current Study	$376,010	$12,000,000
Elk City 230/138/13kV Transformer CKT 1 Replace terminal equipment for Elk City Transformer to achieve transformer limit of 450MVA.	Current Study	$887,135	$15,000,000
GEN-2015-018 Interconnection Costs See One-Line Diagram.	Current Study	$4,881,118	$4,881,118
Grapevine - Chisholm 345kV CKT 1 Build approximately 75 miles of new 345kV from Grapevine - Chisholm.	Current Study	$3,646,816	$75,000,000

* Withdrawal of higher queued projects will cause a restudy and may result in higher costs

Interconnection Request and Upgrades	Upgrade Type	Allocated Cost	Upgrade Cost
Grapevine Substation Upgrade 345kV Build Grapevine Substation and terminate Beaver Co - Grapevine, Potter Co - Grapevine, Grapevine - Chisholm 345kV into the Grapevine Substation.	Current Study	$583,491	$12,000,000
Oklaunion 345kV Reactive Power Support Incremental Upgrade Install additional +100Mvar SVC at Oklaunion.	Current Study	$950,793	$20,000,000
Pleasant Hill - Potter County 345kV CKT 1 Build approximately 125 miles of 345kV from Pleasant Hill - Potter County	Current Study	$9,147,486	$125,000,000
Pleasant Hill 345/230/13kV Tranformer CKT 1 Build 345/230/13kV transformer at Pleasant Hill	Current Study	$1,691,482	$15,000,000
Potter County - Grapevine 345kV CKT 1 Build approximately 65 miles of new 345kV from Potter County - Grapevine.	Current Study	$4,842,162	$65,000,000
Potter County Interchange 345/230/13kV Transformer CKT 2 Build second 345/230/13kV transformer at Potter County	Current Study	$562,791	$15,000,000
Tolk - Pleasant Hill 345kV CKT 1 Build approximately 50 miles of 345kV from Tolk - Pleasant Hill	Current Study	$1,487,847	$50,000,000
TUCO 2 - Border 345kV CKT 2 Build approximately 194 miles of second circuit 345kV from TUCO 2 - Border	Current Study	$9,222,692	$194,000,000
TUCO 2 - Yoakum 345kV Retermination Incremental Upgrade for SPP-NTC-200283 to reterminate TUCO terminal to TUCO 2 terminal by adding approximately 3 miles of 345kV	Current Study	$146,650	$5,000,000
Carlisle - TUCO Interchange 230kV CKT 1 NRIS only required upgrade: Replace terminal equipment per SPP-2012-AG3-AFS-9	Previously Allocated		$702,378
Chisholm - Gracemont 345kV CKT 1 Per SPP-NTC-200255 and 200240 (Total Project E&C Cost Shown)	Previously Allocated		$162,952,357
National Enrichment Plant-Targa 115kV CKT 1 Rebuild approximately 4 miles of 115kV from National Enrichment Plant to Targa per 2015 ITPNT.	Previously Allocated		$2,909,669
Oklaunion 345kV Reactive Power Support Install 110Mvar Capacitor Bank(s) and +50Mvar/-50Mvar SVC at Oklaunion.	Previously Allocated		$25,000,000
Potash Junction 230/115 kV Ckt 1 Per HPILs SPP-NTC-200282 (Total Project E&C Cost Shown)	Previously Allocated		$3,508,346
Targa-Cardinal 115kV CKT 1 Rebuild approximately 3 miles of 115kV from Targa to Cardinal per 2015 ITPNT.	Previously Allocated		$2,049,062
Tolk - Plant X 230kV CKT 3 Build a 3rd circuit betweek Tolk - Plant X 230kV	Previously Allocated		$20,000,000

* Withdrawal of higher queued projects will cause a restudy and may result in higher costs

Interconnection Request and Upgrades	Upgrade Type	Allocated Cost	Upgrade Cost
TUCO 2 Substation Upgrade 345/230kV Tap Border-TUCO approximately 2 miles from TUCO and build TUCO 2 345kV substation and add 345/230/13.2kV transformer and tie on TUCO-Swisher 230kV.	Previously Allocated		$18,000,000
TUCO Interchange - TUCO 2 230kV CKT 1 Replace wave trap at TUCO	Previously Allocated		$1,000,000
TUCO Interchange - Yoakum - Hobbs 345/230kV Project Per HPILs SPP-NTC-200283 (Total Project E&C Cost Shown)	Previously Allocated		$241,826,483
	Current Study Total	$42,010,767	
GEN-2015-019			
GEN-2015-019 Interconnection Costs See One-Line Diagram.	Current Study	$1,250,000	$1,250,000
	Current Study Total	$1,250,000	
GEN-2015-020			
Border - Chisholm 345kV CKT 2 Build approximately 25 miles of second circuit 345kV from Border - Chisholm	Current Study	$1,468,266	$25,000,000
Border 345kV Reactive Power Support Install 200Mvar Capacitor Bank(s) and +200Mvar SVC at Border Substation.	Current Study	$1,874,075	$30,000,000
Chisholm - Elk City 230kV CKT 1 Rebuild approximately 15 miles of 230kV from Chisholm - Elk City.	Current Study	$1,108,035	$15,000,000
Chisholm Substation Upgrade 345kV Expand planned Chisholm Substation to tap and terminate Woodward - Border 345kV into the Chisholm Substation.	Current Study	$464,524	$12,000,000
Elk City 230/138/13kV Transformer CKT 1 Replace terminal equipment for Elk City Transformer to achieve transformer limit of 450MVA.	Current Study	$1,108,035	$15,000,000
GEN-2015-020 Interconnection Costs See One-Line Diagram.	Current Study	$8,917,920	$8,917,920
Grapevine - Chisholm 345kV CKT 1 Build approximately 75 miles of new 345kV from Grapevine - Chisholm.	Current Study	$4,662,379	$75,000,000
Grapevine Substation Upgrade 345kV Build Grapevine Substation and terminate Beaver Co - Grapevine, Potter Co - Grapevine, Grapevine - Chisholm 345kV into the Grapevine Substation.	Current Study	$745,981	$12,000,000
Oklaunion 345kV Reactive Power Support Incremental Upgrade Install additional +100Mvar SVC at Oklaunion.	Current Study	$1,174,612	$20,000,000
Pleasant Hill - Potter County 345kV CKT 1 Build approximately 125 miles of 345kV from Pleasant Hill - Potter County	Current Study	$12,916,455	$125,000,000

* Withdrawal of higher queued projects will cause a restudy and may result in higher costs

Interconnection Request and Upgrades	Upgrade Type	Allocated Cost	Upgrade Cost
Pleasant Hill 345/230/13kV Tranformer CKT 1 Build 345/230/13kV transformer at Pleasant Hill	Current Study	$2,583,787	$15,000,000
Potter County - Grapevine 345kV CKT 1 Build approximately 65 miles of new 345kV from Potter County - Grapevine.	Current Study	$6,190,604	$65,000,000
Potter County Interchange 345/230/13kV Transformer CKT 2 Build second 345/230/13kV transformer at Potter County	Current Study	$413,842	$15,000,000
Tolk - Pleasant Hill 345kV CKT 1 Build approximately 50 miles of 345kV from Tolk - Pleasant Hill	Current Study	$3,339,833	$50,000,000
TUCO 2 - Border 345kV CKT 2 Build approximately 194 miles of second circuit 345kV from TUCO 2 - Border	Current Study	$11,393,741	$194,000,000
TUCO 2 - Yoakum 345kV Retermination Incremental Upgrade for SPP-NTC-200283 to reterminate TUCO terminal to TUCO 2 terminal by adding approximately 3 miles of 345kV	Current Study	$202,422	$5,000,000
Carlisle - TUCO Interchange 230kV CKT 1 NRIS only required upgrade: Replace terminal equipment per SPP-2012-AG3-AFS-9	Previously Allocated		$702,378
Chisholm - Gracemont 345kV CKT 1 Per SPP-NTC-200255 and 200240 (Total Project E&C Cost Shown)	Previously Allocated		$162,952,357
National Enrichment Plant-Targa 115kV CKT 1 Rebuild approximately 4 miles of 115kV from National Enrichment Plant to Targa per 2015 ITPNT.	Previously Allocated		$2,909,669
Oklaunion 345kV Reactive Power Support Install 110Mvar Capacitor Bank(s) and +50Mvar/-50Mvar SVC at Oklaunion.	Previously Allocated		$25,000,000
Potash Junction 230/115 kV Ckt 1 Per HPILs SPP-NTC-200282 (Total Project E&C Cost Shown)	Previously Allocated		$3,508,346
Targa-Cardinal 115kV CKT 1 Rebuild approximately 3 miles of 115kV from Targa to Cardinal per 2015 ITPNT.	Previously Allocated		$2,049,062
Tolk - Plant X 230kV CKT 3 Build a 3rd circuit betweek Tolk - Plant X 230kV	Previously Allocated		$20,000,000
TUCO 2 Substation Upgrade 345/230kV Tap Border-TUCO approximately 2 miles from TUCO and build TUCO 2 345kV substation and add 345/230/13.2kV transformer and tie on TUCO-Swisher 230kV.	Previously Allocated		$18,000,000
TUCO Interchange - TUCO 2 230kV CKT 1 Replace wave trap at TUCO	Previously Allocated		$1,000,000
TUCO Interchange - Yoakum - Hobbs 345/230kV Project Per HPILs SPP-NTC-200283 (Total Project E&C Cost Shown)	Previously Allocated		$241,826,483
	Current Study Total	$58,564,508	

* Withdrawal of higher queued projects will cause a restudy and may result in higher costs

Interconnection Request and Upgrades	Upgrade Type	Allocated Cost	Upgrade Cost
GEN-2015-021			
GEN-2015-021 Interconnection Costs See One-Line Diagram.	Current Study	$1,438,309	$1,438,309
Bucker - Spearville 345V CKT 1 Replace Terminal equipment	Previously Allocated		$1,480,238
Clark County Reactive Power Support Install 100Mvar SVC at Clark County Substation.	Previously Allocated		$24,303,536
FPL Switch - Mooreland 138kV CKT 1 Rebuild approximately 0.2 miles of 138kV line	Previously Allocated		$820,000
FPL Switch - Woodward 138kV CKT 1 Rebuild approximately 12 miles of 138kV line	Previously Allocated		$8,499,000
Harper - Milan Tap 138kV CKT 1 Rebuild approximately 22 miles of 138kV line	Previously Allocated		$9,613,332
Knoll - Postrock 230kV CKT 1 Rebuild approximately 1 mile of 230kV from Knoll - Post Rock.	Previously Allocated		$500,000
Milan Tap - Clearwater 138kV CKT 1 Rebuild approximately 12 miles of 138kV line	Previously Allocated		$18,000,000
	Current Study Total	$1,438,309	
GEN-2015-022			
Border - Chisholm 345kV CKT 2 Build approximately 25 miles of second circuit 345kV from Border - Chisholm	Current Study	$1,769,459	$25,000,000
Chisholm - Elk City 230kV CKT 1 Rebuild approximately 15 miles of 230kV from Chisholm - Elk City.	Current Study	$1,250,707	$15,000,000
Chisholm Substation Upgrade 345kV Expand planned Chisholm Substation to tap and terminate Woodward - Border 345kV into the Chisholm Substation.	Current Study	$559,818	$12,000,000
Elk City 230/138/13kV Transformer CKT 1 Replace terminal equipment for Elk City Transformer to achieve transformer limit of 450MVA.	Current Study	$1,250,707	$15,000,000
GEN-2015-022 Interconnection Costs See One-Line Diagram.	Current Study	$3,565,234	$3,565,234
Grapevine - Chisholm 345kV CKT 1 Build approximately 75 miles of new 345kV from Grapevine - Chisholm.	Current Study	$4,419,472	$75,000,000
Grapevine Substation Upgrade 345kV Build Grapevine Substation and terminate Beaver Co - Grapevine, Potter Co - Grapevine, Grapevine - Chisholm 345kV into the Grapevine Substation.	Current Study	$707,115	$12,000,000

* Withdrawal of higher queued projects will cause a restudy and may result in higher costs

Interconnection Request and Upgrades	Upgrade Type	Allocated Cost	Upgrade Cost
Kress Interchange - Swisher 115kV CKT 1 Replace terminal equipment	Current Study	$500,000	$500,000
Oklaunion 345kV Reactive Power Support Incremental Upgrade Install additional +100Mvar SVC at Oklaunion.	Current Study	$1,415,568	$20,000,000
Pleasant Hill - Potter County 345kV CKT 1 Build approximately 125 miles of 345kV from Pleasant Hill - Potter County	Current Study	$4,354,909	$125,000,000
Pleasant Hill 345/230/13kV Tranformer CKT 1 Build 345/230/13kV transformer at Pleasant Hill	Current Study	$318,030	$15,000,000
Potter County - Grapevine 345kV CKT 1 Build approximately 65 miles of new 345kV from Potter County - Grapevine.	Current Study	$5,868,077	$65,000,000
Potter County Interchange 345/230/13kV Transformer CKT 2 Build second 345/230/13kV transformer at Potter County	Current Study	$2,380,986	$15,000,000
Tolk - Pleasant Hill 345kV CKT 1 Build approximately 50 miles of 345kV from Tolk - Pleasant Hill	Current Study	$2,382,011	$50,000,000
TUCO 2 - Border 345kV CKT 2 Build approximately 194 miles of second circuit 345kV from TUCO 2 - Border	Current Study	$13,731,006	$194,000,000
TUCO 2 - Yoakum 345kV Retermination Incremental Upgrade for SPP-NTC-200283 to reterminate TUCO terminal to TUCO 2 terminal by adding approximately 3 miles of 345kV	Current Study	$42,323	$5,000,000
Carlisle - TUCO Interchange 230kV CKT 1 NRIS only required upgrade: Replace terminal equipment per SPP-2012-AG3-AFS-9	Previously Allocated		$702,378
Chisholm - Gracemont 345kV CKT 1 Per SPP-NTC-200255 and 200240 (Total Project E&C Cost Shown)	Previously Allocated		$162,952,357
National Enrichment Plant-Targa 115kV CKT 1 Rebuild approximately 4 miles of 115kV from National Enrichment Plant to Targa per 2015 ITPNT.	Previously Allocated		$2,909,669
Oklaunion 345kV Reactive Power Support Install 110Mvar Capacitor Bank(s) and +50Mvar/-50Mvar SVC at Oklaunion.	Previously Allocated		$25,000,000
Potash Junction 230/115 kV Ckt 1 Per HPILs SPP-NTC-200282 (Total Project E&C Cost Shown)	Previously Allocated		$3,508,346
Targa-Cardinal 115kV CKT 1 Rebuild approximately 3 miles of 115kV from Targa to Cardinal per 2015 ITPNT.	Previously Allocated		$2,049,062
TUCO 2 Substation Upgrade 345/230kV Tap Border-TUCO approximately 2 miles from TUCO and build TUCO 2 345kV substation and add 345/230/13.2kV transformer and tie on TUCO-Swisher 230kV.	Previously Allocated		$18,000,000

* Withdrawal of higher queued projects will cause a restudy and may result in higher costs

Interconnection Request and Upgrades	Upgrade Type	Allocated Cost	Upgrade Cost
TUCO Interchange - Yoakum - Hobbs 345/230kV Project Per HPILs SPP-NTC-200283 (Total Project E&C Cost Shown)	Previously Allocated		$241,826,483
	Current Study Total	$44,515,421	
GEN-2015-023			
GEN-2014-059 Tap - Ogallala 230kV CKT 1 Replace terminal equipment and increase line clearance. ERIS upgrade for GEN-2014-059. NRIS upgrade for GEN-2014-023.	Current Study	$4,769	$3,000,000
GEN-2015-023 Interconnection Costs See One-Line Diagram.	Current Study	$4,800,000	$4,800,000
Battle Creek-County Line 115kV CKT 1 Rebuild approximately 11 miles of 115kV from Battle Creek to County Line.	Previously Allocated		$4,000,000
County Line-Neligh East 115kV CKT 1 Rebuild approximately 12 miles of 115kV from County Line to Neligh East.	Previously Allocated		$8,050,000
Gentleman - Thedford 345kV CKT 1 Build approximately 76 Miles of 345kV from Gentleman to Thedford. (Total Project E&C Cost Shown).	Previously Allocated		$313,376,623
Hoskins - Neligh 345/115kV Projects Per SPP 2014 ITP NT and NTC 200253 for 6/1/2016 in-service.	Previously Allocated		$98,697,720
Thedford - Holt County 345kV CKT 1 Build approximately 146 Miles of 345kV from Thedford to Holt County. (Total Project E&C Cost Shown).	Previously Allocated		$313,376,623
Thedford 345/115kV Transformer CKT 1 Install Thedford 345/115kV transformer (Total Project E&C Cost Shown). SPP-NTC-200277.	Previously Allocated		$10,236,800
Twin Church - Dixon County 230kV Increase conductor clearances to accommodate 320MVA facility rating	Previously Allocated		$100,000
	Current Study Total	$4,804,769	
GEN-2015-024			
Benton - Wichita 345kV Replace terminal equipment.	Current Study	$125,000	$250,000
GEN-2015-024 Interconnection Costs See One-Line Diagram.	Current Study	$32,704,640	$32,704,640
	Current Study Total	$32,829,640	
GEN-2015-025			
Benton - Wichita 345kV Replace terminal equipment.	Current Study	$125,000	$250,000

* Withdrawal of higher queued projects will cause a restudy and may result in higher costs

Interconnection Request and Upgrades	Upgrade Type	Allocated Cost	Upgrade Cost
GEN-2015-025 Interconnection Costs See One-Line Diagram.	Current Study	$0	$0
	Current Study Total	$125,000	
GEN-2015-027			
Crooked Creek - Cudahy 115kV CKT 1 Rebuild approximately 10 miles of 115kV from Crooked Creek - Cudahy.	Current Study	$6,650,000	$6,650,000
Cudahy - Kismet 115kV CKT 1 Rebuild approximately 32 miles of 115kV from Cudahy - Kismet.	Current Study	$22,400,000	$22,400,000
GEN-2015-027 Interconnection Costs See One-Line Diagram.	Current Study	$150,000	$150,000
Greenburg - Shooting Star 115kV CKT 1 Rebuild approximately 8 miles of 115kV from Greenburg - Shooting Star.	Current Study	$5,250,000	$5,250,000
Clark County Reactive Power Support Install 100Mvar SVC at Clark County Substation.	Previously Allocated		$24,303,536
FPL Switch - Mooreland 138kV CKT 1 Rebuild approximately 0.2 miles of 138kV line	Previously Allocated		$820,000
FPL Switch - Woodward 138kV CKT 1 Rebuild approximately 12 miles of 138kV line	Previously Allocated		$8,499,000
Harper - Milan Tap 138kV CKT 1 Rebuild approximately 22 miles of 138kV line	Previously Allocated		$9,613,332
Knoll - Postrock 230kV CKT 1 Rebuild approximately 1 mile of 230kV from Knoll - Post Rock.	Previously Allocated		$500,000
Milan Tap - Clearwater 138kV CKT 1 Rebuild approximately 12 miles of 138kV line	Previously Allocated		$18,000,000
	Current Study Total	$34,450,000	
GEN-2015-028			
GEN-2015-028 Interconnection Costs See One-Line Diagram.	Current Study	$0	$0
Clearwater - Viola 138kV CKT 1 Per SPP 2013 ITP NT and SPP-NTC-200213 for 6/1/2018 in-service.	Previously Allocated		$40,525,225
Fairfax 138/69kV CKT 1 Per AECI Affected System Study for DISIS-2012-002	Previously Allocated		$2,200,000

* Withdrawal of higher queued projects will cause a restudy and may result in higher costs

Interconnection Request and Upgrades	Upgrade Type	Allocated Cost	Upgrade Cost
Remington - Fairfax 138KV CKT 1 Increase conductor clearance	Previously Allocated		$400,000
Viola - Sumner County 138kV CKT 1 Per SPP 2014 ITP NT and SPP-NTC-200296 for 6/1/2019 in-service.	Previously Allocated		$51,513,963
Viola 345/138 kV Transformer CKT 1 Per SPP 2013 ITP NT and SPP-NTC-200213 for 6/1/2018 in-service.	Previously Allocated		$15,402,744
	Current Study Total	$0	
GEN-2015-029			
GEN-2015-029 Interconnection Costs See One-Line Diagram.	Current Study	$2,270,100	$2,270,100
FPL Switch - Mooreland 138kV CKT 1 Rebuild approximately 0.2 miles of 138kV line	Previously Allocated		$820,000
FPL Switch - Woodward 138kV CKT 1 Rebuild approximately 12 miles of 138kV line	Previously Allocated		$8,499,000
	Current Study Total	$2,270,100	
GEN-2015-030			
GEN-2015-030 Interconnection Costs See One-Line Diagram.	Current Study	$3,369,366	$3,369,366
Fairfax 138/69kV CKT 1 Per AECI Affected System Study for DISIS-2012-002	Previously Allocated		$2,200,000
Remington - Fairfax 138KV CKT 1 Increase conductor clearance	Previously Allocated		$400,000
	Current Study Total	$3,369,366	
	TOTAL CURRENT STUDY COSTS:	**$1,102,966,416***	

*Does not include cost to mitigate GGS Flowgate Limitations.

* Withdrawal of higher queued projects will cause a restudy and may result in higher costs

E1: Stand Alone Cost Allocation per Interconnection Request (Including Prior Queued Upgrades)

Important Note:

****WITHDRAWAL OF HIGHER QUEUED PROJECTS WILL CAUSE A RESTUDY AND MAY RESULT IN HIGHER INTERCONNECTION COSTS****

This section shows each Generation Interconnection Request Customer, their current study impacted Network Upgrades, and the previously allocated upgrades upon which they rely to accommodate their interconnection to the transmission system UNDER A STAND ALONE SCENARIO ONLY.

The costs associated with the current study Network Upgrades are allocated to the Customers shown in this report.

In addition should a higher queued request, defined as one this study includes as a prior queued request, withdraw, the Network Upgrades assigned to the withdrawn request may be reallocated to the remaining requests that have an impact on the Network Upgrade under a restudy. Also, should a Interconnection Request choose to go into service prior to the operation date of any necessary Network Upgrades, the costs associated with those upgrades may be reallocated to the impacted Interconnection Request. The actual costs allocated to each Generation Interconnection Request Customer will be determined at the time of a restudy.

The required interconnection costs listed do not include all costs associated with the deliverability of the energy to final customers. These costs are determined by separate studies if the Customer submits a Transmission Service Request through SPP's Open Access Same Time Information System (OASIS) as required by Attachment Z1 of the SPP OATT. In addition, costs associated with a short circuit analysis will be allocated should the Interconnection Request Customer choose to execute a Facility Study Agreement.

Appendix E1. Cost Allocation Per Stand-Alone Request

(Including Previously Allocated Network Upgrades*)

Interconnection Request and Upgrades	Upgrade Type	Allocated Cost	Upgrade Cost
ASGI-2015-001			
ASGI-2015-001 Interconnection Costs See One-Line Diagram.	Current Study	$3,188,259	$3,188,259
Clark County Reactive Power Support Install 100Mvar SVC at Clark County Substation.	Previously Allocated		$24,303,536
FPL Switch - Mooreland 138kV CKT 1 Rebuild approximately 0.2 miles of 138kV line	Previously Allocated		$820,000
FPL Switch - Woodward 138kV CKT 1 Rebuild approximately 12 miles of 138kV line	Previously Allocated		$8,499,000
Harper - Milan Tap 138kV CKT 1 Rebuild approximately 22 miles of 138kV line	Previously Allocated		$9,613,332
Knoll - Postrock 230kV CKT 1 Rebuild approximately 1 mile of 230kV from Knoll - Post Rock.	Previously Allocated		$500,000
Milan Tap - Clearwater 138kV CKT 1 Rebuild approximately 12 miles of 138kV line	Previously Allocated		$18,000,000
Walkemeyer Tap - Walkemeyer 345/115kV Project Per SPP-NTC-200343 (Total Project E&C Cost Shown).	Previously Allocated		$17,838,846
	Current Study Total	$3,188,259	
ASGI-2015-002			
ASGI-2015-002 Interconnection Costs See One-Line Diagram.	Current Study	$0	$0
Agave Hill 115kV Reactive Power Support Build Agave Hill 28.8Mvar Capacitor bank per 2015 ITPNT.	Previously Allocated		$1,619,280
Amoco Wasson - Oxy Tap 230kV CKT 1 Replace line traps at both terminals	Previously Allocated		$200,000
Carlisle 230/115/13kV Transformer CKT 1 Replace existing Carlisle 230/115/13kV Transformer circuit #1.	Previously Allocated		$5,000,000
National Enrichment Plant-Targa 115kV CKT 1 Rebuild approximately 4 miles of 115kV from National Enrichment Plant to Targa per 2015 ITPNT.	Previously Allocated		$2,909,669

* Withdrawal of higher queued projects will cause a restudy and may result in higher costs

Interconnection Request and Upgrades	Upgrade Type	Allocated Cost	Upgrade Cost
Ochoa 115kV Reactive Power Support Build Ochoa 28.8Mvar Capacitor bank per 2015 ITPNT.	Previously Allocated		$1,619,280
Oklaunion 345kV Reactive Power Support Install 110Mvar Capacitor Bank(s) and +50Mvar/-50Mvar SVC at Oklaunion.	Previously Allocated		$25,000,000
Potash Junction 230/115 kV Ckt 1 Per HPILs SPP-NTC-200282 (Total Project E&C Cost Shown)	Previously Allocated		$3,508,346
Potash Junction 230kV Reactive Power Support Build Potash Junction 100Mvar Capacitor bank per 2015 ITPNT.	Previously Allocated		$6,465,875
Targa-Cardinal 115kV CKT 1 Rebuild approximately 3 miles of 115kV from Targa to Cardinal per 2015 ITPNT.	Previously Allocated		$2,049,062
Tolk - Plant X 230kV CKT 3 Build a 3rd circuit betweek Tolk - Plant X 230kV	Previously Allocated		$20,000,000
TUCO 2 Substation Upgrade 345/230kV Tap Border-TUCO approximately 2 miles from TUCO and build TUCO 2 345kV substation and add 345/230/13.2kV transformer and tie on TUCO-Swisher 230kV.	Previously Allocated		$18,000,000
TUCO Interchange - TUCO 2 230kV CKT 1 Replace wave trap at TUCO	Previously Allocated		$1,000,000
	Current Study Total	$0	

ASGI-2015-003

ASGI-2015-003 Interconnection Costs See One-Line Diagram.	Current Study	$0	$0
Agave Hill 115kV Reactive Power Support Build Agave Hill 28.8Mvar Capacitor bank per 2015 ITPNT.	Previously Allocated		$1,619,280
Amoco Wasson - Oxy Tap 230kV CKT 1 Replace line traps at both terminals	Previously Allocated		$200,000
Carlisle 230/115/13kV Transformer CKT 1 Replace existing Carlisle 230/115/13kV Transformer circuit #1.	Previously Allocated		$5,000,000
National Enrichment Plant-Targa 115kV CKT 1 Rebuild approximately 4 miles of 115kV from National Enrichment Plant to Targa per 2015 ITPNT.	Previously Allocated		$2,909,669
Norton - Pleasant Hill 230kV CKT 1 Convert 54 miles of 115kV from Norton - Pleasant Hill to 230kV.	Previously Allocated		$40,000,000
Ochoa 115kV Reactive Power Support Build Ochoa 28.8Mvar Capacitor bank per 2015 ITPNT.	Previously Allocated		$1,619,280

* Withdrawal of higher queued projects will cause a restudy and may result in higher costs

Interconnection Request and Upgrades	Upgrade Type	Allocated Cost	Upgrade Cost
Oklaunion 345kV Reactive Power Support Install 110Mvar Capacitor Bank(s) and +50Mvar/-50Mvar SVC at Oklaunion.	Previously Allocated		$25,000,000
Potash Junction 230/115 kV Ckt 1 Per HPILs SPP-NTC-200282 (Total Project E&C Cost Shown)	Previously Allocated		$3,508,346
Potash Junction 230kV Reactive Power Support Build Potash Junction 100Mvar Capacitor bank per 2015 ITPNT.	Previously Allocated		$6,465,875
Targa-Cardinal 115kV CKT 1 Rebuild approximately 3 miles of 115kV from Targa to Cardinal per 2015 ITPNT.	Previously Allocated		$2,049,062
Tolk - Plant X 230kV CKT 3 Build a 3rd circuit betweek Tolk - Plant X 230kV	Previously Allocated		$20,000,000
TUCO 2 Substation Upgrade 345/230kV Tap Border-TUCO approximately 2 miles from TUCO and build TUCO 2 345kV substation and add 345/230/13.2kV transformer and tie on TUCO-Swisher 230kV.	Previously Allocated		$18,000,000
TUCO Interchange - TUCO 2 230kV CKT 1 Replace wave trap at TUCO	Previously Allocated		$1,000,000
	Current Study Total	$0	
ASGI-2015-004			
ASGI-2015-004 Interconnection Costs See One-Line Diagram.	Current Study	$0	$0
Fairfax 138/69kV CKT 1 Per AECI Affected System Study for DISIS-2012-002	Previously Allocated		$2,200,000
Remington - Fairfax 138KV CKT 1 Increase conductor clearance	Previously Allocated		$400,000
	Current Study Total	$0	
GEN-2010-048			
GEN-2010-048 Interconnection Costs See One-Line Diagram.	Current Study	$4,000,000	$4,000,000
Arnold - Ransom 115kV CKT 1 Replace terminal equipment to achieve at least a 600 amp rating.	Previously Allocated		$3,000,000
Bucker - Spearville 345V CKT 1 Replace Terminal equipment	Previously Allocated		$1,480,238
Mingo 345/115kV Transformer CKT 2 Build second 345/115/13.8kV transformer at Mingo per 2015 ITP10 SPP-NTC-200325.	Previously Allocated		$9,842,317

* Withdrawal of higher queued projects will cause a restudy and may result in higher costs

Interconnection Request and Upgrades	Upgrade Type	Allocated Cost	Upgrade Cost
	Current Study Total	$4,000,000	
GEN-2014-023			
Albion - Petersburg - North Petersburg 115kV CKT 1 Reconductor 115kV lines and replace all terminal equipment for at least a 193MVA rate.	Current Study	$3,500,000	$3,500,000
GEN-2014-023 Interconnection Costs See One-Line Diagram.	Current Study	$9,200,000	$9,200,000
Meadow Grove - North Petersburg 115kV CKT 1 Build approx. 25 miles of new 115kV circuit from Meadow Grove - N. Petersburg, expand N. Petersburg 115kV Sub and replace equip. at Neligh 115kV Sub.	Current Study	$16,200,000	$16,200,000
Meadow Grove 230/115/13.8kV Transformer CKT 1 Build Meadow Grove 230/115/13.8kV Transformer and Substation Expansion.	Current Study	$11,300,000	$11,300,000
Battle Creek-County Line 115kV CKT 1 Rebuild approximately 11 miles of 115kV from Battle Creek to County Line.	Previously Allocated		$4,000,000
County Line-Neligh East 115kV CKT 1 Rebuild approximately 12 miles of 115kV from County Line to Neligh East.	Previously Allocated		$8,050,000
Hoskins - Dixon County - Twin Church 230kV Rerate per NPPD Facility Study	Previously Allocated		$500,000
Hoskins - Neligh 345/115kV Projects Per SPP 2014 ITP NT and NTC 200253 for 6/1/2016 in-service.	Previously Allocated		$98,697,720
	Current Study Total	$40,200,000	
GEN-2014-037			
Beaver County - Grapevine 345kV CKT 1 Build approximately 75 miles of new 345kV from Beaver County - Grapevine.	Current Study	$75,000,000	$75,000,000
Chisholm Substation Upgrade 345kV Expand planned Chisholm Substation to tap and terminate Woodward - Border 345kV into the Chisholm Substation.	Current Study	$12,000,000	$12,000,000
GEN-2014-037 Interconnection Costs See One-Line Diagram.	Current Study	$20,339,743	$20,339,743
Grapevine - Chisholm 345kV CKT 1 Build approximately 75 miles of new 345kV from Grapevine - Chisholm.	Current Study	$75,000,000	$75,000,000
Beaver County 345kV Reactive Power Support Install 75Mvar SVC at Beaver County Substation.	Previously Allocated		$21,823,556
Chisholm - Gracemont 345kV CKT 1 Per SPP-NTC-200255 and 200240 (Total Project E&C Cost Shown)	Previously Allocated		$162,952,357

* Withdrawal of higher queued projects will cause a restudy and may result in higher costs

Interconnection Request and Upgrades	Upgrade Type	Allocated Cost	Upgrade Cost
FPL Switch - Mooreland 138kV CKT 1 Rebuild approximately 0.2 miles of 138kV line	Previously Allocated		$820,000
FPL Switch - Woodward 138kV CKT 1 Rebuild approximately 12 miles of 138kV line	Previously Allocated		$8,499,000
Walkemeyer Tap - Walkemeyer 345/115kV Project Per SPP-NTC-200343 (Total Project E&C Cost Shown).	Previously Allocated		$17,838,846
	Current Study Total	$182,339,743	
GEN-2014-038			
Beaver County - Grapevine 345kV CKT 1 Build approximately 75 miles of new 345kV from Beaver County - Grapevine.	Current Study	$75,000,000	$75,000,000
GEN-2014-038 Interconnection Costs See One-Line Diagram.	Current Study	$12,542,886	$12,542,886
Grapevine - Chisholm 345kV CKT 1 Build approximately 75 miles of new 345kV from Grapevine - Chisholm.	Current Study	$75,000,000	$75,000,000
Potter County Interchange 345/230/13kV Transformer CKT 2 Build second 345/230/13kV transformer at Potter County	Current Study	$15,000,000	$15,000,000
Beaver County 345kV Reactive Power Support Install 75Mvar SVC at Beaver County Substation.	Previously Allocated		$21,823,556
FPL Switch - Mooreland 138kV CKT 1 Rebuild approximately 0.2 miles of 138kV line	Previously Allocated		$820,000
FPL Switch - Woodward 138kV CKT 1 Rebuild approximately 12 miles of 138kV line	Previously Allocated		$8,499,000
Walkemeyer Tap - Walkemeyer 345/115kV Project Per SPP-NTC-200343 (Total Project E&C Cost Shown).	Previously Allocated		$17,838,846
	Current Study Total	$177,542,886	
GEN-2014-046			
Carlsbad Interchange - Pecos Interchange 115kV CKT 1 NRIS only required upgrade: Upgrade terminal equipment	Current Study	$200,000	$200,000
GEN-2014-046 Interconnection Costs See One-Line Diagram.	Current Study	$1,016,368	$1,016,368
Agave Hill 115kV Reactive Power Support Build Agave Hill 28.8Mvar Capacitor bank per 2015 ITPNT.	Previously Allocated		$1,619,280

* Withdrawal of higher queued projects will cause a restudy and may result in higher costs

Interconnection Request and Upgrades	Upgrade Type	Allocated Cost	Upgrade Cost
Amoco Wasson - Oxy Tap 230kV CKT 1 Replace line traps at both terminals	Previously Allocated		$200,000
Carlisle 230/115/13kV Transformer CKT 1 Replace existing Carlisle 230/115/13kV Transformer circuit #1.	Previously Allocated		$5,000,000
Chaves County - Price - CV Pines - Capitan 115kV CKT 1 NRIS only required upgrade: Per HPILs SPP-NTC-200256 (Total Project E&C Cost Shown)	Previously Allocated		$14,275,000
National Enrichment Plant-Targa 115kV CKT 1 Rebuild approximately 4 miles of 115kV from National Enrichment Plant to Targa per 2015 ITPNT.	Previously Allocated		$2,909,669
Ochoa 115kV Reactive Power Support Build Ochoa 28.8Mvar Capacitor bank per 2015 ITPNT.	Previously Allocated		$1,619,280
Oklaunion 345kV Reactive Power Support Install 110Mvar Capacitor Bank(s) and +50Mvar/-50Mvar SVC at Oklaunion.	Previously Allocated		$25,000,000
Potash Junction 230/115 kV Ckt 1 Per HPILs SPP-NTC-200282 (Total Project E&C Cost Shown)	Previously Allocated		$3,508,346
Potash Junction 230kV Reactive Power Support Build Potash Junction 100Mvar Capacitor bank per 2015 ITPNT.	Previously Allocated		$6,465,875
Targa-Cardinal 115kV CKT 1 Rebuild approximately 3 miles of 115kV from Targa to Cardinal per 2015 ITPNT.	Previously Allocated		$2,049,062
Tolk - Plant X 230kV CKT 3 Build a 3rd circuit betweek Tolk - Plant X 230kV	Previously Allocated		$20,000,000
TUCO 2 Substation Upgrade 345/230kV Tap Border-TUCO approximately 2 miles from TUCO and build TUCO 2 345kV substation and add 345/230/13.2kV transformer and tie on TUCO-Swisher 230kV.	Previously Allocated		$18,000,000
TUCO Interchange - TUCO 2 230kV CKT 1 Replace wave trap at TUCO	Previously Allocated		$1,000,000
	Current Study Total	$1,216,368	
GEN-2014-059			
GEN-2014-059 Interconnection Costs See One-Line Diagram.	Current Study	$9,200,000	$9,200,000
GEN-2014-059 Tap - Ogallala 230kV CKT 1 Replace terminal equipment and increase line clearance. ERIS upgrade for GEN-2014-059. NRIS upgrade for GEN-2014-023.	Current Study	$3,000,000	$3,000,000
Gerald Gentleman Station Flowgate Stability Limit Mitigation Mitigation for GGS Flowgate Stability Limit. TBD in the Facilities Study with NPPD.	Current Study	$TBD	$TBD

* Withdrawal of higher queued projects will cause a restudy and may result in higher costs

Interconnection Request and Upgrades	Upgrade Type	Allocated Cost	Upgrade Cost
Battle Creek-County Line 115kV CKT 1 Rebuild approximately 11 miles of 115kV from Battle Creek to County Line.	Previously Allocated		$4,000,000
County Line-Neligh East 115kV CKT 1 Rebuild approximately 12 miles of 115kV from County Line to Neligh East.	Previously Allocated		$8,050,000
Gentleman - Thedford 345kV CKT 1 Build approximately 76 Miles of 345kV from Gentleman to Thedford. (Total Project E&C Cost Shown).	Previously Allocated		$313,376,623
Hoskins - Neligh 345/115kV Projects Per SPP 2014 ITP NT and NTC 200253 for 6/1/2016 in-service.	Previously Allocated		$98,697,720
Stegall - Scottsbluff 115kV CKT 1 NRIS only required upgrade: Install Stegall 345/115kV transformer and build a new 22 mile 115kV line from Stegall - Scottsbluff. SPP-NTC-200253.	Previously Allocated		$35,000,000
Thedford - Holt County 345kV CKT 1 Build approximately 146 Miles of 345kV from Thedford to Holt County. (Total Project E&C Cost Shown).	Previously Allocated		$313,376,623
Thedford 345/115kV Transformer CKT 1 Install Thedford 345/115kV transformer (Total Project E&C Cost Shown). SPP-NTC-200277.	Previously Allocated		$10,236,800
	Current Study Total	$12,200,000*	
GEN-2014-060			
GEN-2014-060 Interconnection Costs See One-Line Diagram.	Current Study	$6,300,000	$6,300,000
Battle Creek-County Line 115kV CKT 1 Rebuild approximately 11 miles of 115kV from Battle Creek to County Line.	Previously Allocated		$4,000,000
County Line-Neligh East 115kV CKT 1 Rebuild approximately 12 miles of 115kV from County Line to Neligh East.	Previously Allocated		$8,050,000
Hoskins - Neligh 345/115kV Projects Per SPP 2014 ITP NT and NTC 200253 for 6/1/2016 in-service.	Previously Allocated		$98,697,720
	Current Study Total	$6,300,000	
GEN-2014-065			
GEN-2014-065 Interconnection Costs See One-Line Diagram.	Current Study	$7,542,402	$7,542,402
Ochoa - Ponderosa Tap 115kv CKT 1 Rebuild approximately 9.1 miles of 115kV	Current Study	$6,825,000	$6,825,000
Agave Hill 115kV Reactive Power Support Build Agave Hill 28.8Mvar Capacitor bank per 2015 ITPNT.	Previously Allocated		$1,619,280

* Withdrawal of higher queued projects will cause a restudy and may result in higher costs

Interconnection Request and Upgrades	Upgrade Type	Allocated Cost	Upgrade Cost
Amoco Wasson - Oxy Tap 230kV CKT 1 Replace line traps at both terminals	Previously Allocated		$200,000
Carlisle 230/115/13kV Transformer CKT 1 Replace existing Carlisle 230/115/13kV Transformer circuit #1.	Previously Allocated		$5,000,000
National Enrichment Plant-Targa 115kV CKT 1 Rebuild approximately 4 miles of 115kV from National Enrichment Plant to Targa per 2015 ITPNT.	Previously Allocated		$2,909,669
Ochoa 115kV Reactive Power Support Build Ochoa 28.8Mvar Capacitor bank per 2015 ITPNT.	Previously Allocated		$1,619,280
Oklaunion 345kV Reactive Power Support Install 110Mvar Capacitor Bank(s) and +50Mvar/-50Mvar SVC at Oklaunion.	Previously Allocated		$25,000,000
Ponderosa Tap - Whitten 115kV CKT Per 2015 ITPNT SPP-NTC-C-200324	Previously Allocated		$4,044,971
Potash Junction 230/115 kV Ckt 1 Per HPILs SPP-NTC-200282 (Total Project E&C Cost Shown)	Previously Allocated		$3,508,346
Potash Junction 230kV Reactive Power Support Build Potash Junction 100Mvar Capacitor bank per 2015 ITPNT.	Previously Allocated		$6,465,875
Targa-Cardinal 115kV CKT 1 Rebuild approximately 3 miles of 115kV from Targa to Cardinal per 2015 ITPNT.	Previously Allocated		$2,049,062
Tolk - Plant X 230kV CKT 3 Build a 3rd circuit betweek Tolk - Plant X 230kV	Previously Allocated		$20,000,000
TUCO 2 Substation Upgrade 345/230kV Tap Border-TUCO approximately 2 miles from TUCO and build TUCO 2 345kV substation and add 345/230/13.2kV transformer and tie on TUCO-Swisher 230kV.	Previously Allocated		$18,000,000
TUCO Interchange - TUCO 2 230kV CKT 1 Replace wave trap at TUCO	Previously Allocated		$1,000,000
	Current Study Total	$14,367,402	
GEN-2014-068			
Deaf Smith 230/115/13kV Transformer CKT 3 NRIS only required upgrade: build 3rd 230/115/13kV transformer at Deaf Smith	Current Study	$5,000,000	$5,000,000
GEN-2014-068 Interconnection Costs See One-Line Diagram.	Current Study	$8,346,514	$8,346,514
	Current Study Total	$13,346,514	

* Withdrawal of higher queued projects will cause a restudy and may result in higher costs

Interconnection Request and Upgrades	Upgrade Type	Allocated Cost	Upgrade Cost
GEN-2014-074			
GEN-2014-074 Interconnection Costs See One-Line Diagram.	Current Study	$13,519,992	$13,519,992
TUCO 2 230/115/13kV Transformer CKT 1 NRIS only required upgrade: Buildout 115kV at TUCO 2, re-route Hale County - TUCO 115kV into TUCO 2 115kV, build TUCO 2 230/115/13kV Transformer 1	Current Study	$12,000,000	$12,000,000
Agave Hill 115kV Reactive Power Support Build Agave Hill 28.8Mvar Capacitor bank per 2015 ITPNT.	Previously Allocated		$1,619,280
Amoco Wasson - Oxy Tap 230kV CKT 1 Replace line traps at both terminals	Previously Allocated		$200,000
Carlisle 230/115/13kV Transformer CKT 1 Replace existing Carlisle 230/115/13kV Transformer circuit #1.	Previously Allocated		$5,000,000
National Enrichment Plant-Targa 115kV CKT 1 Rebuild approximately 4 miles of 115kV from National Enrichment Plant to Targa per 2015 ITPNT.	Previously Allocated		$2,909,669
Ochoa 115kV Reactive Power Support Build Ochoa 28.8Mvar Capacitor bank per 2015 ITPNT.	Previously Allocated		$1,619,280
Oklaunion 345kV Reactive Power Support Install 110Mvar Capacitor Bank(s) and +50Mvar/-50Mvar SVC at Oklaunion.	Previously Allocated		$25,000,000
Potash Junction 230/115 kV Ckt 1 Per HPILs SPP-NTC-200282 (Total Project E&C Cost Shown)	Previously Allocated		$3,508,346
Potash Junction 230kV Reactive Power Support Build Potash Junction 100Mvar Capacitor bank per 2015 ITPNT.	Previously Allocated		$6,465,875
Targa-Cardinal 115kV CKT 1 Rebuild approximately 3 miles of 115kV from Targa to Cardinal per 2015 ITPNT.	Previously Allocated		$2,049,062
Tolk - Plant X 230kV CKT 3 Build a 3rd circuit betweek Tolk - Plant X 230kV	Previously Allocated		$20,000,000
TUCO 2 Substation Upgrade 345/230kV Tap Border-TUCO approximately 2 miles from TUCO and build TUCO 2 345kV substation and add 345/230/13.2kV transformer and tie on TUCO-Swisher 230kV.	Previously Allocated		$18,000,000
TUCO Interchange - TUCO 2 230kV CKT 1 Replace wave trap at TUCO	Previously Allocated		$1,000,000
TUCO Interchange - Yoakum - Hobbs 345/230kV Project Per HPILs SPP-NTC-200283 (Total Project E&C Cost Shown)	Previously Allocated		$241,826,483
	Current Study Total	$25,519,992	

* Withdrawal of higher queued projects will cause a restudy and may result in higher costs

Interconnection Request and Upgrades	Upgrade Type	Allocated Cost	Upgrade Cost
GEN-2015-001			
GEN-2015-001 Interconnection Costs See One-Line Diagram.	Current Study	$2,250,100	$2,250,100
Fairfax 138/69kV CKT 1 Per AECI Affected System Study for DISIS-2012-002	Previously Allocated		$2,200,000
Remington - Fairfax 138KV CKT 1 Increase conductor clearance	Previously Allocated		$400,000
	Current Study Total	$2,250,100	
GEN-2015-003			
GEN-2015-003 Interconnection Costs See One-Line Diagram.	Current Study	$2,250,100	$2,250,100
Viola 345/138kV Transformer CKT 2 Build second 345/138/13.8kV transformer at Viola.	Current Study	$15,000,000	$15,000,000
Clearwater - Viola 138kV CKT 1 Per SPP 2013 ITP NT and SPP-NTC-200213 for 6/1/2018 in-service.	Previously Allocated		$40,525,225
Fairfax 138/69kV CKT 1 Per AECI Affected System Study for DISIS-2012-002	Previously Allocated		$2,200,000
Remington - Fairfax 138KV CKT 1 Increase conductor clearance	Previously Allocated		$400,000
Viola - Sumner County 138kV CKT 1 Per SPP 2014 ITP NT and SPP-NTC-200296 for 6/1/2019 in-service.	Previously Allocated		$51,513,963
Viola 345/138 kV Transformer CKT 1 Per SPP 2013 ITP NT and SPP-NTC-200213 for 6/1/2018 in-service.	Previously Allocated		$15,402,744
	Current Study Total	$17,250,100	
GEN-2015-004			
GEN-2015-004 Interconnection Costs See One-Line Diagram.	Current Study	$0	$0
	Current Study Total	$0	
GEN-2015-005			
GEN-2015-005 Interconnection Costs See One-Line Diagram.	Current Study	$18,262,000	$18,262,000

* Withdrawal of higher queued projects will cause a restudy and may result in higher costs

Interconnection Request and Upgrades	Upgrade Type	Allocated Cost	Upgrade Cost
Nebraska City - Sibley 345kV CKT 1 Priority Project: Nebraska City - Mullin Creek - Sibley 345kV circuit 1 per NTC (SPP-NTC-20097 and SPP-NTC-20098. (Total Project E&C Cost Shown).	Previously Allocated		$407,764,364
	Current Study Total	$18,262,000	
GEN-2015-006			
Beaver County - Grapevine 345kV CKT 1 Build approximately 75 miles of new 345kV from Beaver County - Grapevine.	Current Study	$75,000,000	$75,000,000
GEN-2015-006 Interconnection Costs See One-Line Diagram.	Current Study	$2,270,100	$2,270,100
Grapevine - Chisholm 345kV CKT 1 Build approximately 75 miles of new 345kV from Grapevine - Chisholm.	Current Study	$75,000,000	$75,000,000
Beaver County 345kV Reactive Power Support Install 75Mvar SVC at Beaver County Substation.	Previously Allocated		$21,823,556
FPL Switch - Mooreland 138kV CKT 1 Rebuild approximately 0.2 miles of 138kV line	Previously Allocated		$820,000
FPL Switch - Woodward 138kV CKT 1 Rebuild approximately 12 miles of 138kV line	Previously Allocated		$8,499,000
Walkemeyer Tap - Walkemeyer 345/115kV Project Per SPP-NTC-200343 (Total Project E&C Cost Shown).	Previously Allocated		$17,838,846
	Current Study Total	$152,270,100	
GEN-2015-007			
GEN-2015-007 Interconnection Costs See One-Line Diagram.	Current Study	$5,300,000	$5,300,000
Twin Church - Dixon County 230kV Increase conductor clearances to accommodate 320MVA facility rating	Previously Allocated		$100,000
	Current Study Total	$5,300,000	
GEN-2015-008			
Albion - Petersburg - North Petersburg 115kV CKT 1 Reconductor 115kV lines and replace all terminal equipment for at least a 193MVA rate.	Current Study	$3,500,000	$3,500,000
Battle Creek - Norfolk 115kV CKT 1 Rebuild approximately 10 miles of 115kV from Norfolk - Battle Creek.	Current Study	$4,000,000	$4,000,000
Bloomfield - Gavins 115kV CKT 1 Rebuild approximately 17 miles of 115kV from Gavins - Bloomfield.	Current Study	$20,000,000	$20,000,000

* Withdrawal of higher queued projects will cause a restudy and may result in higher costs

Interconnection Request and Upgrades	Upgrade Type	Allocated Cost	Upgrade Cost
GEN-2015-008 Interconnection Costs See One-Line Diagram.	Current Study	$1,000,000	$1,000,000
Battle Creek-County Line 115kV CKT 1 Rebuild approximately 11 miles of 115kV from Battle Creek to County Line.	Previously Allocated		$4,000,000
County Line-Neligh East 115kV CKT 1 Rebuild approximately 12 miles of 115kV from County Line to Neligh East.	Previously Allocated		$8,050,000
Hoskins - Neligh 345/115kV Projects Per SPP 2014 ITP NT and NTC 200253 for 6/1/2016 in-service.	Previously Allocated		$98,697,720
Twin Church - Dixon County 230kV Increase conductor clearances to accommodate 320MVA facility rating	Previously Allocated		$100,000
	Current Study Total	$28,500,000	
GEN-2015-009			
Cunningham Station - Maddox Station 115kV CKT 1 NRIS only required upgrade: Rebuild approximately 3 miles of 115kV line.	Current Study	$1,914,000	$1,914,000
Cunningham Station - Potash Junction Interchange 230kV CKT 1 NRIS only required upgrade: Replace Line Traps.	Current Study	$200,000	$200,000
GEN-2015-009 Interconnection Costs See One-Line Diagram.	Current Study	$1,301,825	$1,301,825
Agave Hill 115kV Reactive Power Support Build Agave Hill 28.8Mvar Capacitor bank per 2015 ITPNT.	Previously Allocated		$1,619,280
Amoco Wasson - Oxy Tap 230kV CKT 1 Replace line traps at both terminals	Previously Allocated		$200,000
Carlisle 230/115/13kV Transformer CKT 1 Replace existing Carlisle 230/115/13kV Transformer circuit #1.	Previously Allocated		$5,000,000
National Enrichment Plant-Targa 115kV CKT 1 Rebuild approximately 4 miles of 115kV from National Enrichment Plant to Targa per 2015 ITPNT.	Previously Allocated		$2,909,669
Ochoa 115kV Reactive Power Support Build Ochoa 28.8Mvar Capacitor bank per 2015 ITPNT.	Previously Allocated		$1,619,280
Oklaunion 345kV Reactive Power Support Install 110Mvar Capacitor Bank(s) and +50Mvar/-50Mvar SVC at Oklaunion.	Previously Allocated		$25,000,000
Potash Junction 230/115 kV Ckt 1 NRIS only required upgrade: Per HPILs SPP-NTC-200282 (Total Project E&C Cost Shown)	Previously Allocated		$3,508,346

* Withdrawal of higher queued projects will cause a restudy and may result in higher costs

Interconnection Request and Upgrades	Upgrade Type	Allocated Cost	Upgrade Cost
Potash Junction 230kV Reactive Power Support Build Potash Junction 100Mvar Capacitor bank per 2015 ITPNT.	Previously Allocated		$6,465,875
Targa-Cardinal 115kV CKT 1 Rebuild approximately 3 miles of 115kV from Targa to Cardinal per 2015 ITPNT.	Previously Allocated		$2,049,062
Tolk - Plant X 230kV CKT 3 Build a 3rd circuit betweek Tolk - Plant X 230kV	Previously Allocated		$20,000,000
TUCO 2 Substation Upgrade 345/230kV Tap Border-TUCO approximately 2 miles from TUCO and build TUCO 2 345kV substation and add 345/230/13.2kV transformer and tie on TUCO-Swisher 230kV.	Previously Allocated		$18,000,000
TUCO Interchange - TUCO 2 230kV CKT 1 Replace wave trap at TUCO	Previously Allocated		$1,000,000
TUCO Interchange - Yoakum - Hobbs 345/230kV Project Per HPILs SPP-NTC-200283 (Total Project E&C Cost Shown)	Previously Allocated		$241,826,483
	Current Study Total	$3,415,825	
GEN-2015-010			
Curry County - Deaf Smith REC #20 115kV CKT 1 Rebuild approximately 13 miles of 115kV from Curry County - Deaf Smith Rec #20	Current Study	$10,000,000	$10,000,000
GEN-2015-010 Interconnection Costs See One-Line Diagram.	Current Study	$6,166,348	$6,166,348
Agave Hill 115kV Reactive Power Support Build Agave Hill 28.8Mvar Capacitor bank per 2015 ITPNT.	Previously Allocated		$1,619,280
Amoco Wasson - Oxy Tap 230kV CKT 1 Replace line traps at both terminals	Previously Allocated		$200,000
Carlisle 230/115/13kV Transformer CKT 1 Replace existing Carlisle 230/115/13kV Transformer circuit #1.	Previously Allocated		$5,000,000
National Enrichment Plant-Targa 115kV CKT 1 Rebuild approximately 4 miles of 115kV from National Enrichment Plant to Targa per 2015 ITPNT.	Previously Allocated		$2,909,669
Ochoa 115kV Reactive Power Support Build Ochoa 28.8Mvar Capacitor bank per 2015 ITPNT.	Previously Allocated		$1,619,280
Oklaunion 345kV Reactive Power Support Install 110Mvar Capacitor Bank(s) and +50Mvar/-50Mvar SVC at Oklaunion.	Previously Allocated		$25,000,000
Potash Junction 230/115 kV Ckt 1 Per HPILs SPP-NTC-200282 (Total Project E&C Cost Shown)	Previously Allocated		$3,508,346

* Withdrawal of higher queued projects will cause a restudy and may result in higher costs

Interconnection Request and Upgrades	Upgrade Type	Allocated Cost	Upgrade Cost
Potash Junction 230kV Reactive Power Support Build Potash Junction 100Mvar Capacitor bank per 2015 ITPNT.	Previously Allocated		$6,465,875
Targa-Cardinal 115kV CKT 1 Rebuild approximately 3 miles of 115kV from Targa to Cardinal per 2015 ITPNT.	Previously Allocated		$2,049,062
Tolk - Plant X 230kV CKT 3 Build a 3rd circuit betweek Tolk - Plant X 230kV	Previously Allocated		$20,000,000
TUCO 2 Substation Upgrade 345/230kV Tap Border-TUCO approximately 2 miles from TUCO and build TUCO 2 345kV substation and add 345/230/13.2kV transformer and tie on TUCO-Swisher 230kV.	Previously Allocated		$18,000,000
TUCO Interchange - TUCO 2 230kV CKT 1 Replace wave trap at TUCO	Previously Allocated		$1,000,000
	Current Study Total	$16,166,348	
GEN-2015-013			
GEN-2015-013 Interconnection Costs See One-Line Diagram.	Current Study	$1,000,000	$1,000,000
	Current Study Total	$1,000,000	
GEN-2015-014			
GEN-2015-014 Interconnection Costs See One-Line Diagram.	Current Study	$4,773,333	$4,773,333
Agave Hill 115kV Reactive Power Support Build Agave Hill 28.8Mvar Capacitor bank per 2015 ITPNT.	Previously Allocated		$1,619,280
Amoco Wasson - Oxy Tap 230kV CKT 1 Replace line traps at both terminals	Previously Allocated		$200,000
Carlisle 230/115/13kV Transformer CKT 1 Replace existing Carlisle 230/115/13kV Transformer circuit #1.	Previously Allocated		$5,000,000
National Enrichment Plant-Targa 115kV CKT 1 Rebuild approximately 4 miles of 115kV from National Enrichment Plant to Targa per 2015 ITPNT.	Previously Allocated		$2,909,669
Ochoa 115kV Reactive Power Support Build Ochoa 28.8Mvar Capacitor bank per 2015 ITPNT.	Previously Allocated		$1,619,280
Oklaunion 345kV Reactive Power Support Install 110Mvar Capacitor Bank(s) and +50Mvar/-50Mvar SVC at Oklaunion.	Previously Allocated		$25,000,000
Potash Junction 230/115 kV Ckt 1 Per HPILs SPP-NTC-200282 (Total Project E&C Cost Shown)	Previously Allocated		$3,508,346

* Withdrawal of higher queued projects will cause a restudy and may result in higher costs

Interconnection Request and Upgrades	Upgrade Type	Allocated Cost	Upgrade Cost
Potash Junction 230kV Reactive Power Support Build Potash Junction 100Mvar Capacitor bank per 2015 ITPNT.	Previously Allocated		$6,465,875
Targa-Cardinal 115kV CKT 1 Rebuild approximately 3 miles of 115kV from Targa to Cardinal per 2015 ITPNT.	Previously Allocated		$2,049,062
Tolk - Plant X 230kV CKT 3 Build a 3rd circuit betweek Tolk - Plant X 230kV	Previously Allocated		$20,000,000
TUCO 2 Substation Upgrade 345/230kV Tap Border-TUCO approximately 2 miles from TUCO and build TUCO 2 345kV substation and add 345/230/13.2kV transformer and tie on TUCO-Swisher 230kV.	Previously Allocated		$18,000,000
TUCO Interchange - TUCO 2 230kV CKT 1 Replace wave trap at TUCO	Previously Allocated		$1,000,000
	Current Study Total	$4,773,333	
GEN-2015-015			
GEN-2015-015 Interconnection Costs See One-Line Diagram.	Current Study	$3,041,661	$3,041,661
Clearwater - Viola 138kV CKT 1 Per SPP 2013 ITP NT and SPP-NTC-200213 for 6/1/2018 in-service.	Previously Allocated		$40,525,225
Fairfax 138/69kV CKT 1 Per AECI Affected System Study for DISIS-2012-002	Previously Allocated		$2,200,000
Remington - Fairfax 138KV CKT 1 Increase conductor clearance	Previously Allocated		$400,000
Viola - Sumner County 138kV CKT 1 Per SPP 2014 ITP NT and SPP-NTC-200296 for 6/1/2019 in-service.	Previously Allocated		$51,513,963
Viola 345/138 kV Transformer CKT 1 Per SPP 2013 ITP NT and SPP-NTC-200213 for 6/1/2018 in-service.	Previously Allocated		$15,402,744
	Current Study Total	$3,041,661	
GEN-2015-016			
GEN-2015-016 Interconnection Costs See One-Line Diagram.	Current Study	$8,110,000	$8,110,000
Remington - Fairfax 138KV CKT 1 Increase conductor clearance	Previously Allocated		$400,000
	Current Study Total	$8,110,000	

* Withdrawal of higher queued projects will cause a restudy and may result in higher costs

Interconnection Request and Upgrades	Upgrade Type	Allocated Cost	Upgrade Cost
GEN-2015-017			
GEN-2015-017 Interconnection Costs See One-Line Diagram.	Current Study	$3,459,098	$3,459,098
Arnold - Ransom 115kV CKT 1 Replace terminal equipment to achieve at least a 600 amp rating.	Previously Allocated		$3,000,000
Bucker - Spearville 345V CKT 1 Replace Terminal equipment	Previously Allocated		$1,480,238
Mingo 345/115kV Transformer CKT 2 Build second 345/115/13.8kV transformer at Mingo per 2015 ITP10 SPP-NTC-200325.	Previously Allocated		$9,842,317
	Current Study Total	$3,459,098	
GEN-2015-018			
GEN-2015-018 Interconnection Costs See One-Line Diagram.	Current Study	$4,881,118	$4,881,118
Agave Hill 115kV Reactive Power Support Build Agave Hill 28.8Mvar Capacitor bank per 2015 ITPNT.	Previously Allocated		$1,619,280
Amoco Wasson - Oxy Tap 230kV CKT 1 Replace line traps at both terminals	Previously Allocated		$200,000
Carlisle 230/115/13kV Transformer CKT 1 Replace existing Carlisle 230/115/13kV Transformer circuit #1.	Previously Allocated		$5,000,000
National Enrichment Plant-Targa 115kV CKT 1 Rebuild approximately 4 miles of 115kV from National Enrichment Plant to Targa per 2015 ITPNT.	Previously Allocated		$2,909,669
Ochoa 115kV Reactive Power Support Build Ochoa 28.8Mvar Capacitor bank per 2015 ITPNT.	Previously Allocated		$1,619,280
Oklaunion 345kV Reactive Power Support Install 110Mvar Capacitor Bank(s) and +50Mvar/-50Mvar SVC at Oklaunion.	Previously Allocated		$25,000,000
Potash Junction 230/115 kV Ckt 1 Per HPILs SPP-NTC-200282 (Total Project E&C Cost Shown)	Previously Allocated		$3,508,346
Potash Junction 230kV Reactive Power Support Build Potash Junction 100Mvar Capacitor bank per 2015 ITPNT.	Previously Allocated		$6,465,875
Targa-Cardinal 115kV CKT 1 Rebuild approximately 3 miles of 115kV from Targa to Cardinal per 2015 ITPNT.	Previously Allocated		$2,049,062
Tolk - Plant X 230kV CKT 3 Build a 3rd circuit betweek Tolk - Plant X 230kV	Previously Allocated		$20,000,000

* Withdrawal of higher queued projects will cause a restudy and may result in higher costs

Interconnection Request and Upgrades	Upgrade Type	Allocated Cost	Upgrade Cost
TUCO 2 Substation Upgrade 345/230kV Tap Border-TUCO approximately 2 miles from TUCO and build TUCO 2 345kV substation and add 345/230/13.2kV transformer and tie on TUCO-Swisher 230kV.	Previously Allocated		$18,000,000
TUCO Interchange - TUCO 2 230kV CKT 1 Replace wave trap at TUCO	Previously Allocated		$1,000,000
	Current Study Total	$4,881,118	
GEN-2015-019			
GEN-2015-019 Interconnection Costs See One-Line Diagram.	Current Study	$1,250,000	$1,250,000
	Current Study Total	$1,250,000	
GEN-2015-020			
Curry County - Deaf Smith REC #20 115kV CKT 1 Rebuild approximately 13 miles of 115kV from Curry County - Deaf Smith Rec #20	Current Study	$10,000,000	$10,000,000
GEN-2015-020 Interconnection Costs See One-Line Diagram.	Current Study	$8,917,920	$8,917,920
Agave Hill 115kV Reactive Power Support Build Agave Hill 28.8Mvar Capacitor bank per 2015 ITPNT.	Previously Allocated		$1,619,280
Amoco Wasson - Oxy Tap 230kV CKT 1 Replace line traps at both terminals	Previously Allocated		$200,000
Carlisle 230/115/13kV Transformer CKT 1 Replace existing Carlisle 230/115/13kV Transformer circuit #1.	Previously Allocated		$5,000,000
National Enrichment Plant-Targa 115kV CKT 1 Rebuild approximately 4 miles of 115kV from National Enrichment Plant to Targa per 2015 ITPNT.	Previously Allocated		$2,909,669
Ochoa 115kV Reactive Power Support Build Ochoa 28.8Mvar Capacitor bank per 2015 ITPNT.	Previously Allocated		$1,619,280
Oklaunion 345kV Reactive Power Support Install 110Mvar Capacitor Bank(s) and +50Mvar/-50Mvar SVC at Oklaunion.	Previously Allocated		$25,000,000
Potash Junction 230/115 kV Ckt 1 Per HPILs SPP-NTC-200282 (Total Project E&C Cost Shown)	Previously Allocated		$3,508,346
Potash Junction 230kV Reactive Power Support Build Potash Junction 100Mvar Capacitor bank per 2015 ITPNT.	Previously Allocated		$6,465,875
Targa-Cardinal 115kV CKT 1 Rebuild approximately 3 miles of 115kV from Targa to Cardinal per 2015 ITPNT.	Previously Allocated		$2,049,062

* Withdrawal of higher queued projects will cause a restudy and may result in higher costs

Interconnection Request and Upgrades	Upgrade Type	Allocated Cost	Upgrade Cost
Tolk - Plant X 230kV CKT 3 Build a 3rd circuit betweek Tolk - Plant X 230kV	Previously Allocated		$20,000,000
TUCO 2 Substation Upgrade 345/230kV Tap Border-TUCO approximately 2 miles from TUCO and build TUCO 2 345kV substation and add 345/230/13.2kV transformer and tie on TUCO-Swisher 230kV.	Previously Allocated		$18,000,000
TUCO Interchange - TUCO 2 230kV CKT 1 Replace wave trap at TUCO	Previously Allocated		$1,000,000
	Current Study Total	$18,917,920	
GEN-2015-021			
GEN-2015-021 Interconnection Costs See One-Line Diagram.	Current Study	$1,438,309	$1,438,309
Bucker - Spearville 345V CKT 1 Replace Terminal equipment	Previously Allocated		$1,480,238
Clark County Reactive Power Support Install 100Mvar SVC at Clark County Substation.	Previously Allocated		$24,303,536
Harper - Milan Tap 138kV CKT 1 Rebuild approximately 22 miles of 138kV line	Previously Allocated		$9,613,332
Knoll - Postrock 230kV CKT 1 Rebuild approximately 1 mile of 230kV from Knoll - Post Rock.	Previously Allocated		$500,000
Milan Tap - Clearwater 138kV CKT 1 Rebuild approximately 12 miles of 138kV line	Previously Allocated		$18,000,000
Walkemeyer Tap - Walkemeyer 345/115kV Project Per SPP-NTC-200343 (Total Project E&C Cost Shown).	Previously Allocated		$17,838,846
	Current Study Total	$1,438,309	
GEN-2015-022			
GEN-2015-022 Interconnection Costs See One-Line Diagram.	Current Study	$3,565,234	$3,565,234
Kress Interchange - Swisher 115kV CKT 1 Replace terminal equipment	Current Study	$500,000	$500,000
Agave Hill 115kV Reactive Power Support Build Agave Hill 28.8Mvar Capacitor bank per 2015 ITPNT.	Previously Allocated		$1,619,280
Amoco Wasson - Oxy Tap 230kV CKT 1 Replace line traps at both terminals	Previously Allocated		$200,000

* Withdrawal of higher queued projects will cause a restudy and may result in higher costs

Interconnection Request and Upgrades	Upgrade Type	Allocated Cost	Upgrade Cost
Carlisle 230/115/13kV Transformer CKT 1 Replace existing Carlisle 230/115/13kV Transformer circuit #1.	Previously Allocated		$5,000,000
National Enrichment Plant-Targa 115kV CKT 1 Rebuild approximately 4 miles of 115kV from National Enrichment Plant to Targa per 2015 ITPNT.	Previously Allocated		$2,909,669
Ochoa 115kV Reactive Power Support Build Ochoa 28.8Mvar Capacitor bank per 2015 ITPNT.	Previously Allocated		$1,619,280
Oklaunion 345kV Reactive Power Support Install 110Mvar Capacitor Bank(s) and +50Mvar/-50Mvar SVC at Oklaunion.	Previously Allocated		$25,000,000
Potash Junction 230/115 kV Ckt 1 Per HPILs SPP-NTC-200282 (Total Project E&C Cost Shown)	Previously Allocated		$3,508,346
Potash Junction 230kV Reactive Power Support Build Potash Junction 100Mvar Capacitor bank per 2015 ITPNT.	Previously Allocated		$6,465,875
Targa-Cardinal 115kV CKT 1 Rebuild approximately 3 miles of 115kV from Targa to Cardinal per 2015 ITPNT.	Previously Allocated		$2,049,062
Tolk - Plant X 230kV CKT 3 Build a 3rd circuit betweek Tolk - Plant X 230kV	Previously Allocated		$20,000,000
TUCO 2 Substation Upgrade 345/230kV Tap Border-TUCO approximately 2 miles from TUCO and build TUCO 2 345kV substation and add 345/230/13.2kV transformer and tie on TUCO-Swisher 230kV.	Previously Allocated		$18,000,000
TUCO Interchange - TUCO 2 230kV CKT 1 Replace wave trap at TUCO	Previously Allocated		$1,000,000
	Current Study Total	$4,065,234	
GEN-2015-023			
GEN-2015-023 Interconnection Costs See One-Line Diagram.	Current Study	$4,800,000	$4,800,000
Battle Creek-County Line 115kV CKT 1 Rebuild approximately 11 miles of 115kV from Battle Creek to County Line.	Previously Allocated		$4,000,000
County Line-Neligh East 115kV CKT 1 Rebuild approximately 12 miles of 115kV from County Line to Neligh East.	Previously Allocated		$8,050,000
Gentleman - Thedford 345kV CKT 1 Build approximately 76 Miles of 345kV from Gentleman to Thedford. (Total Project E&C Cost Shown).	Previously Allocated		$313,376,623
Hoskins - Neligh 345/115kV Projects Per SPP 2014 ITP NT and NTC 200253 for 6/1/2016 in-service.	Previously Allocated		$98,697,720

* Withdrawal of higher queued projects will cause a restudy and may result in higher costs

Interconnection Request and Upgrades	Upgrade Type	Allocated Cost	Upgrade Cost
Thedford - Holt County 345kV CKT 1 Build approximately 146 Miles of 345kV from Thedford to Holt County. (Total Project E&C Cost Shown).	Previously Allocated		$313,376,623
Thedford 345/115kV Transformer CKT 1 Install Thedford 345/115kV transformer (Total Project E&C Cost Shown). SPP-NTC-200277.	Previously Allocated		$10,236,800
Twin Church - Dixon County 230kV Increase conductor clearances to accommodate 320MVA facility rating	Previously Allocated		$100,000
	Current Study Total	$4,800,000	
GEN-2015-024			
GEN-2015-024 Interconnection Costs See One-Line Diagram.	Current Study	$32,704,640	$32,704,640
	Current Study Total	$32,704,640	
GEN-2015-025			
GEN-2015-025 Interconnection Costs See One-Line Diagram.	Current Study	$32,704,640	$32,704,640
	Current Study Total	$32,704,640	
GEN-2015-027			
Crooked Creek - Cudahy 115kV CKT 1 Rebuild approximately 10 miles of 115kV from Crooked Creek - Cudahy.	Current Study	$6,650,000	$6,650,000
Cudahy - Kismet 115kV CKT 1 Rebuild approximately 32 miles of 115kV from Cudahy - Kismet.	Current Study	$22,400,000	$22,400,000
GEN-2015-027 Interconnection Costs See One-Line Diagram.	Current Study	$150,000	$150,000
Greenburg - Shooting Star 115kV CKT 1 Rebuild approximately 8 miles of 115kV from Greenburg - Shooting Star.	Current Study	$5,250,000	$5,250,000
Clark County Reactive Power Support Install 100Mvar SVC at Clark County Substation.	Previously Allocated		$24,303,536
FPL Switch - Mooreland 138kV CKT 1 Rebuild approximately 0.2 miles of 138kV line	Previously Allocated		$820,000
FPL Switch - Woodward 138kV CKT 1 Rebuild approximately 12 miles of 138kV line	Previously Allocated		$8,499,000
Harper - Milan Tap 138kV CKT 1 Rebuild approximately 22 miles of 138kV line	Previously Allocated		$9,613,332

* Withdrawal of higher queued projects will cause a restudy and may result in higher costs

Interconnection Request and Upgrades	Upgrade Type	Allocated Cost	Upgrade Cost
Knoll - Postrock 230kV CKT 1 Rebuild approximately 1 mile of 230kV from Knoll - Post Rock.	Previously Allocated		$500,000
Milan Tap - Clearwater 138kV CKT 1 Rebuild approximately 12 miles of 138kV line	Previously Allocated		$18,000,000
Walkemeyer Tap - Walkemeyer 345/115kV Project Per SPP-NTC-200343 (Total Project E&C Cost Shown).	Previously Allocated		$17,838,846
	Current Study Total	$34,450,000	
GEN-2015-028			
GEN-2015-028 Interconnection Costs See One-Line Diagram.	Current Study	$0	$0
Fairfax 138/69kV CKT 1 Per AECI Affected System Study for DISIS-2012-002	Previously Allocated		$2,200,000
Remington - Fairfax 138KV CKT 1 Increase conductor clearance	Previously Allocated		$400,000
	Current Study Total	$0	
GEN-2015-029			
GEN-2015-029 Interconnection Costs See One-Line Diagram.	Current Study	$2,270,100	$2,270,100
FPL Switch - Mooreland 138kV CKT 1 Rebuild approximately 0.2 miles of 138kV line	Previously Allocated		$820,000
FPL Switch - Woodward 138kV CKT 1 Rebuild approximately 12 miles of 138kV line	Previously Allocated		$8,499,000
	Current Study Total	$2,270,100	
GEN-2015-030			
GEN-2015-030 Interconnection Costs See One-Line Diagram.	Current Study	$3,369,366	$3,369,366
Fairfax 138/69kV CKT 1 Per AECI Affected System Study for DISIS-2012-002	Previously Allocated		$2,200,000
Remington - Fairfax 138KV CKT 1 Increase conductor clearance	Previously Allocated		$400,000
	Current Study Total	$3,369,366	
	TOTAL CURRENT STUDY COSTS:	**$884,871,056***	

* Does not include cost to mitigate GGS Flowgate Limiation

* Withdrawal of higher queued projects will cause a restudy and may result in higher costs

F: Cost Allocation per Proposed Study Network Upgrade

Important Note:

****WITHDRAWAL OF HIGHER QUEUED PROJECTS WILL CAUSE A RESTUDY AND MAY RESULT IN HIGHER INTERCONNECTION COSTS****

This section shows each Direct Assigned Facility and Network Upgrade and the Generation Interconnection Request Customer(s) which have an impact in this study assuming all higher queued projects remain in the queue and achieve commercial operation.

The required interconnection costs listed do not include all costs associated with the deliverability of the energy to final customers. These costs are determined by separate studies if the Customer submits a Transmission Service Request through SPP's Open Access Same Time Information System (OASIS) as required by Attachment Z1 of the SPP OATT. In addition, costs associated with a short circuit analysis will be allocated should the Interconnection Request Customer choose to execute a Facility Study Agreement.

There may be additional costs allocated to each Customer. See Appendix E for more details.

Appendix F. Cost Allocation by Upgrade

ASGI-2015-001 Interconnection Costs			**$3,188,259**
See One-Line Diagram.			
	ASGI-2015-001	$3,188,259	
	Total Allocated Costs	**$3,188,259**	
ASGI-2015-002 Interconnection Costs			**$0**
See One-Line Diagram.			
	ASGI-2015-002	$0	
	Total Allocated Costs	**$0**	
ASGI-2015-003 Interconnection Costs			**$0**
See One-Line Diagram.			
	ASGI-2015-003	$0	
	Total Allocated Costs	**$0**	
ASGI-2015-004 Interconnection Costs			**$0**
See One-Line Diagram.			
	ASGI-2015-004	$0	
	Total Allocated Costs	**$0**	
Battle Creek - Norfolk 115kV CKT 1			**$4,000,000**
Rebuild approximately 10 miles of 115kV from Norfolk - Battle Creek.			
	GEN-2015-008	$4,000,000	
	Total Allocated Costs	**$4,000,000**	
Beaver County - Grapevine 345kV CKT 1			**$75,000,000**
Build approximately 75 miles of new 345kV from Beaver County - Grapevine.			
	GEN-2014-037	$27,419,556	
	GEN-2014-038	$24,199,165	
	GEN-2015-006	$23,381,280	
	Total Allocated Costs	**$75,000,000**	
Benton - Wichita 345kV			**$250,000**
Replace terminal equipment.			
	GEN-2015-024	$125,000	
	GEN-2015-025	$125,000	
	Total Allocated Costs	**$250,000**	

* Withdrawal of higher queued projects will cause a restudy and may result in higher costs

Bloomfield - Gavins 115kV CKT 1		**$20,000,000**
Rebuild approximately 17 miles of 115kV from Gavins - Bloomfield.		
GEN-2015-008	$20,000,000	
Total Allocated Costs	**$20,000,000**	
Border - Chisholm 345kV CKT 2		**$25,000,000**
Build approximately 25 miles of second circuit 345kV from Border - Chisholm		
ASGI-2015-002	$44,366	
ASGI-2015-003	$419,878	
GEN-2014-046	$2,139,612	
GEN-2014-065	$1,951,803	
GEN-2014-074	$3,193,162	
GEN-2015-009	$6,008,236	
GEN-2015-010	$3,796,560	
GEN-2015-014	$3,020,166	
GEN-2015-018	$1,188,491	
GEN-2015-020	$1,468,266	
GEN-2015-022	$1,769,459	
Total Allocated Costs	**$25,000,000**	
Border 345kV Reactive Power Support		**$30,000,000**
Install 200Mvar Capacitor Bank(s) and +200Mvar SVC at Border Substation.		
ASGI-2015-002	$47,991	
ASGI-2015-003	$548,183	
GEN-2014-046	$2,551,875	
GEN-2014-065	$2,191,879	
GEN-2014-074	$6,424,019	
GEN-2015-009	$6,704,696	
GEN-2015-010	$4,778,627	
GEN-2015-014	$3,369,987	
GEN-2015-018	$1,508,668	
GEN-2015-020	$1,874,075	
Total Allocated Costs	**$30,000,000**	
Bushland Interchange 230/115/13.2kV Transformer CKT 1		**$5,000,000**
NRIS only required upgrade: Replace the existing Bushland 230/115/13.2kV transformer circuit 1		
GEN-2014-068	$5,000,000	
Total Allocated Costs	**$5,000,000**	

* Withdrawal of higher queued projects will cause a restudy and may result in higher costs

Carlsbad Interchange - Pecos Interchange 115kV CKT 1		**$200,000**
NRIS only required upgrade: Upgrade terminal equipment		
	GEN-2014-046	$200,000
	Total Allocated Costs	**$200,000**
Chisholm Substation Upgrade 345kV		**$12,000,000**
Expand planned Chisholm Substation to tap and terminate Woodward - Border 345kV into the Chisholm Substation.		
	ASGI-2015-002	$14,037
	ASGI-2015-003	$132,839
	GEN-2014-037	$1,097,292
	GEN-2014-038	$1,099,121
	GEN-2014-046	$676,931
	GEN-2014-065	$617,564
	GEN-2014-074	$1,010,269
	GEN-2015-004	$1,029,925
	GEN-2015-006	$851,787
	GEN-2015-009	$1,900,911
	GEN-2015-010	$1,201,143
	GEN-2015-013	$12,296
	GEN-2015-014	$955,533
	GEN-2015-018	$376,010
	GEN-2015-020	$464,524
	GEN-2015-022	$559,818
	Total Allocated Costs	**$12,000,000**

* Withdrawal of higher queued projects will cause a restudy and may result in higher costs

Chisholm - Elk City 230kV CKT 1			**$15,000,000**
Rebuild approximately 15 miles of 230kV from Chisholm - Elk City.			
	ASGI-2015-002	$21,754	
	ASGI-2015-003	$332,464	
	GEN-2014-046	$1,381,712	
	GEN-2014-065	$1,084,871	
	GEN-2014-074	$1,230,357	
	GEN-2015-009	$3,285,366	
	GEN-2015-010	$2,775,182	
	GEN-2015-014	$1,642,417	
	GEN-2015-018	$887,135	
	GEN-2015-020	$1,108,035	
	GEN-2015-022	$1,250,707	
	Total Allocated Costs	**$15,000,000**	
Crooked Creek - Cudahy 115kV CKT 1			**$6,650,000**
Rebuild approximately 10 miles of 115kV from Crooked Creek - Cudahy.			
	GEN-2015-027	$6,650,000	
	Total Allocated Costs	**$6,650,000**	
Cudahy - Kismet 115kV CKT 1			**$22,400,000**
Rebuild approximately 32 miles of 115kV from Cudahy - Kismet.			
	GEN-2015-027	$22,400,000	
	Total Allocated Costs	**$22,400,000**	
Cunningham Station - Maddox Station 115kV CKT 1			**$1,914,000**
NRIS only required upgrade: Rebuild approximately 3 miles of 115kV line.			
	GEN-2015-009	$1,914,000	
	Total Allocated Costs	**$1,914,000**	

* Withdrawal of higher queued projects will cause a restudy and may result in higher costs

Elk City 230/138/13kV Transformer CKT 1		**$15,000,000**
Replace terminal equipment for Elk City Transformer to achieve transformer limit of 450MVA.		
	ASGI-2015-002	$21,754
	ASGI-2015-003	$332,464
	GEN-2014-046	$1,381,712
	GEN-2014-065	$1,084,871
	GEN-2014-074	$1,230,357
	GEN-2015-009	$3,285,366
	GEN-2015-010	$2,775,182
	GEN-2015-014	$1,642,417
	GEN-2015-018	$887,135
	GEN-2015-020	$1,108,035
	GEN-2015-022	$1,250,707
	Total Allocated Costs	**$15,000,000**
GEN-2014-059 Tap - Ogallala 230kV CKT 1		**$3,000,000**
Replace terminal equipment and increase line clearance. ERIS upgrade for GEN-2014-059. NRIS upgrade for GEN-2014-023.		
	GEN-2014-023	$13,347
	GEN-2014-059	$2,968,726
	GEN-2015-008	$13,158
	GEN-2015-023	$4,769
	Total Allocated Costs	**$3,000,000**
GEN-2010-048 Interconnection Costs		**$4,000,000**
See One-Line Diagram.		
	GEN-2010-048	$4,000,000
	Total Allocated Costs	**$4,000,000**
GEN-2014-023 Interconnection Costs		**$9,200,000**
See One-Line Diagram.		
	GEN-2014-023	$9,200,000
	Total Allocated Costs	**$9,200,000**
GEN-2014-037 Interconnection Costs		**$20,339,743**
See One-Line Diagram.		
	GEN-2014-037	$20,339,743
	Total Allocated Costs	**$20,339,743**

* Withdrawal of higher queued projects will cause a restudy and may result in higher costs

GEN-2014-038 Interconnection Costs			**$12,542,886**
See One-Line Diagram.			
	GEN-2014-038	$12,542,886	
	Total Allocated Costs	**$12,542,886**	
GEN-2014-046 Interconnection Costs			**$1,016,368**
See One-Line Diagram.			
	GEN-2014-046	$1,016,368	
	Total Allocated Costs	**$1,016,368**	
GEN-2014-059 Interconnection Costs			**$9,200,000**
See One-Line Diagram.			
	GEN-2014-059	$9,200,000	
	Total Allocated Costs	**$9,200,000**	
GEN-2014-060 Interconnection Costs			**$6,300,000**
See One-Line Diagram.			
	GEN-2014-060	$6,300,000	
	Total Allocated Costs	**$6,300,000**	
GEN-2014-065 Interconnection Costs			**$7,542,402**
See One-Line Diagram.			
	GEN-2014-065	$7,542,402	
	Total Allocated Costs	**$7,542,402**	
GEN-2014-068 Interconnection Costs			**$8,346,514**
See One-Line Diagram.			
	GEN-2014-068	$8,346,514	
	Total Allocated Costs	**$8,346,514**	
GEN-2014-074 Interconnection Costs			**$13,519,992**
See One-Line Diagram.			
	GEN-2014-074	$13,519,992	
	Total Allocated Costs	**$13,519,992**	
GEN-2014-074 Tap 345kV Reactive Power Support			**$15,000,000**
Install -30Mvar SVC at Oklaunion.			
	GEN-2014-074	$15,000,000	
	Total Allocated Costs	**$15,000,000**	

* Withdrawal of higher queued projects will cause a restudy and may result in higher costs

GEN-2015-001 Interconnection Costs			**$2,250,100**
See One-Line Diagram.			
	GEN-2015-001	$2,250,100	
	Total Allocated Costs	**$2,250,100**	
GEN-2015-003 Interconnection Costs			**$2,250,100**
See One-Line Diagram.			
	GEN-2015-003	$2,250,100	
	Total Allocated Costs	**$2,250,100**	
GEN-2015-004 Interconnection Costs			**$0**
See One-Line Diagram.			
	GEN-2015-004	$0	
	Total Allocated Costs	**$0**	
GEN-2015-005 Interconnection Costs			**$18,262,000**
See One-Line Diagram.			
	GEN-2015-005	$18,262,000	
	Total Allocated Costs	**$18,262,000**	
GEN-2015-006 Interconnection Costs			**$2,270,100**
See One-Line Diagram.			
	GEN-2015-006	$2,270,100	
	Total Allocated Costs	**$2,270,100**	
GEN-2015-007 Interconnection Costs			**$5,300,000**
See One-Line Diagram.			
	GEN-2015-007	$5,300,000	
	Total Allocated Costs	**$5,300,000**	
GEN-2015-008 Interconnection Costs			**$1,000,000**
See One-Line Diagram.			
	GEN-2015-008	$1,000,000	
	Total Allocated Costs	**$1,000,000**	
GEN-2015-009 Interconnection Costs			**$1,301,825**
See One-Line Diagram.			
	GEN-2015-009	$1,301,825	
	Total Allocated Costs	**$1,301,825**	

* Withdrawal of higher queued projects will cause a restudy and may result in higher costs

GEN-2015-010 Interconnection Costs			**$6,166,348**
See One-Line Diagram.			
	GEN-2015-010	$6,166,348	
	Total Allocated Costs	**$6,166,348**	
GEN-2015-013 Interconnection Costs			**$1,000,000**
See One-Line Diagram.			
	GEN-2015-013	$1,000,000	
	Total Allocated Costs	**$1,000,000**	
GEN-2015-014 Interconnection Costs			**$4,773,333**
See One-Line Diagram.			
	GEN-2015-014	$4,773,333	
	Total Allocated Costs	**$4,773,333**	
GEN-2015-015 Interconnection Costs			**$3,041,661**
See One-Line Diagram.			
	GEN-2015-015	$3,041,661	
	Total Allocated Costs	**$3,041,661**	
GEN-2015-016 Interconnection Costs			**$8,110,000**
See One-Line Diagram.			
	GEN-2015-016	$8,110,000	
	Total Allocated Costs	**$8,110,000**	
GEN-2015-017 Interconnection Costs			**$3,459,098**
See One-Line Diagram.			
	GEN-2015-017	$3,459,098	
	Total Allocated Costs	**$3,459,098**	
GEN-2015-018 Interconnection Costs			**$4,881,118**
See One-Line Diagram.			
	GEN-2015-018	$4,881,118	
	Total Allocated Costs	**$4,881,118**	
GEN-2015-019 Interconnection Costs			**$1,250,000**
See One-Line Diagram.			
	GEN-2015-019	$1,250,000	
	Total Allocated Costs	**$1,250,000**	

* Withdrawal of higher queued projects will cause a restudy and may result in higher costs

GEN-2015-020 Interconnection Costs			**$8,917,920**
See One-Line Diagram.			
	GEN-2015-020	$8,917,920	
	Total Allocated Costs	**$8,917,920**	
GEN-2015-021 Interconnection Costs			**$1,438,309**
See One-Line Diagram.			
	GEN-2015-021	$1,438,309	
	Total Allocated Costs	**$1,438,309**	
GEN-2015-022 Interconnection Costs			**$3,565,234**
See One-Line Diagram.			
	GEN-2015-022	$3,565,234	
	Total Allocated Costs	**$3,565,234**	
GEN-2015-023 Interconnection Costs			**$4,800,000**
See One-Line Diagram.			
	GEN-2015-023	$4,800,000	
	Total Allocated Costs	**$4,800,000**	
GEN-2015-024 Interconnection Costs			**$32,704,640**
See One-Line Diagram.			
	GEN-2015-024	$32,704,640	
	Total Allocated Costs	**$32,704,640**	
GEN-2015-025 Interconnection Costs			**$0**
See One-Line Diagram.			
	GEN-2015-025	$0	
	Total Allocated Costs	**$0**	
GEN-2015-027 Interconnection Costs			**$150,000**
See One-Line Diagram.			
	GEN-2015-027	$150,000	
	Total Allocated Costs	**$150,000**	
GEN-2015-028 Interconnection Costs			**$0**
See One-Line Diagram.			
	GEN-2015-028	$0	
	Total Allocated Costs	**$0**	

* Withdrawal of higher queued projects will cause a restudy and may result in higher costs

GEN-2015-029 Interconnection Costs		**$2,270,100**
See One-Line Diagram.		
GEN-2015-029	$2,270,100	
Total Allocated Costs	**$2,270,100**	
GEN-2015-030 Interconnection Costs		**$3,369,366**
See One-Line Diagram.		
GEN-2015-030	$3,369,366	
Total Allocated Costs	**$3,369,366**	
Gerald Gentleman Station Flowgate Stability Limit Mitigation		**$TBD**
Mitigation for GGS Flowgate Stability Limit. TBD in the Facilities Study with NPPD.		
GEN-2014-059	$TBD	
Total Allocated Costs	**$TBD**	
Grapevine - Chisholm 345kV CKT 1		**$75,000,000**
Build approximately 75 miles of new 345kV from Grapevine - Chisholm.		
ASGI-2015-002	$48,718	
ASGI-2015-003	$1,477,530	
GEN-2014-037	$9,523,592	
GEN-2014-038	$8,405,059	
GEN-2014-046	$4,990,643	
GEN-2014-065	$3,165,447	
GEN-2014-074	$1,334,588	
GEN-2015-006	$8,120,984	
GEN-2015-009	$9,320,658	
GEN-2015-010	$11,323,716	
GEN-2015-014	$4,560,399	
GEN-2015-018	$3,646,816	
GEN-2015-020	$4,662,379	
GEN-2015-022	$4,419,472	
Total Allocated Costs	**$75,000,000**	

* Withdrawal of higher queued projects will cause a restudy and may result in higher costs

Grapevine Substation Upgrade 345kV **$12,000,000**

Build Grapevine Substation and terminate Beaver Co - Grapevine, Potter Co - Grapevine, Grapevine - Chisholm 345kV into the Grapevine Substation.

ASGI-2015-002	$7,795
ASGI-2015-003	$236,405
GEN-2014-037	$1,523,775
GEN-2014-038	$1,344,809
GEN-2014-046	$798,503
GEN-2014-065	$506,471
GEN-2014-074	$213,534
GEN-2015-006	$1,299,357
GEN-2015-009	$1,491,305
GEN-2015-010	$1,811,795
GEN-2015-014	$729,664
GEN-2015-018	$583,491
GEN-2015-020	$745,981
GEN-2015-022	$707,115
Total Allocated Costs	**$12,000,000**

Greenburg - Shooting Star 115kV CKT 1 **$5,250,000**

Rebuild approximately 8 miles of 115kV from Greenburg - Shooting Star.

GEN-2015-027	$5,250,000
Total Allocated Costs	**$5,250,000**

Kress Interchange - Swisher 115kV CKT 1 **$500,000**

Replace terminal equipment

GEN-2015-022	$500,000
Total Allocated Costs	**$500,000**

LES - GEN-2014-057 Tap - Sunnyside 345kV CKT 1 **$250,000**

Replace terminal equipment

GEN-2014-074	$250,000
Total Allocated Costs	**$250,000**

Meadow Grove - North Petersburg 115kV CKT 1 **$16,200,000**

Build approx. 25 miles of new 115kV circuit from Meadow Grove - N. Petersburg, expand N. Petersburg 115kV Sub and replace equip. at Neligh 115kV Sub.

GEN-2014-023	$16,200,000
Total Allocated Costs	**$16,200,000**

* Withdrawal of higher queued projects will cause a restudy and may result in higher costs

Meadow Grove 230/115/13.8kV Transformer CKT 1			**$11,300,000**
Build Meadow Grove 230/115/13.8kV Transformer and Substation Expansion.			
	GEN-2014-023	$11,300,000	
	Total Allocated Costs	**$11,300,000**	
Ochoa - Ponderosa Tap 115kv CKT 1			**$6,825,000**
Rebuild approximately 9.1 miles of 115kV			
	GEN-2014-065	$6,825,000	
	Total Allocated Costs	**$6,825,000**	
Oklaunion 345kV Reactive Power Support Incremental Upgrade			**$20,000,000**
Install additional +100Mvar SVC at Oklaunion.			
	ASGI-2015-002	$35,493	
	ASGI-2015-003	$335,903	
	GEN-2014-046	$1,711,690	
	GEN-2014-065	$1,561,442	
	GEN-2014-074	$2,554,530	
	GEN-2015-009	$4,806,589	
	GEN-2015-010	$3,037,248	
	GEN-2015-014	$2,416,132	
	GEN-2015-018	$950,793	
	GEN-2015-020	$1,174,612	
	GEN-2015-022	$1,415,568	
	Total Allocated Costs	**$20,000,000**	
Albion - Petersburg - North Petersburg 115kV CKT 1			**$3,500,000**
Reconductor 115kV lines and replace all terminal equipment for at least a 193MVA rate.			
	GEN-2014-023	$860,684	
	GEN-2015-008	$2,639,316	
	Total Allocated Costs	**$3,500,000**	

* Withdrawal of higher queued projects will cause a restudy and may result in higher costs

Pleasant Hill - Potter County 345kV CKT 1		**$125,000,000**
Build approximately 125 miles of 345kV from Pleasant Hill - Potter County		
	ASGI-2015-002	$116,100
	ASGI-2015-003	$4,542,759
	GEN-2014-046	$13,893,106
	GEN-2014-065	$8,409,981
	GEN-2014-074	$5,344,128
	GEN-2015-009	$24,636,333
	GEN-2015-010	$30,623,662
	GEN-2015-014	$11,015,082
	GEN-2015-018	$9,147,486
	GEN-2015-020	$12,916,455
	GEN-2015-022	$4,354,909
	Total Allocated Costs	**$125,000,000**
Pleasant Hill 345/230/13kV Tranformer CKT 1		**$15,000,000**
Build 345/230/13kV transformer at Pleasant Hill		
	ASGI-2015-002	$7,092
	ASGI-2015-003	$1,108,717
	GEN-2014-046	$1,343,103
	GEN-2014-065	$441,449
	GEN-2014-074	$327,825
	GEN-2015-009	$1,306,956
	GEN-2015-010	$5,219,049
	GEN-2015-014	$652,510
	GEN-2015-018	$1,691,482
	GEN-2015-020	$2,583,787
	GEN-2015-022	$318,030
	Total Allocated Costs	**$15,000,000**

* Withdrawal of higher queued projects will cause a restudy and may result in higher costs

Potter County - Grapevine 345kV CKT 1 **$65,000,000**

Build approximately 65 miles of new 345kV from Potter County - Grapevine.

ASGI-2015-002	$64,687
ASGI-2015-003	$1,961,968
GEN-2014-046	$6,627,035
GEN-2014-065	$4,204,358
GEN-2014-074	$1,772,725
GEN-2015-009	$12,377,125
GEN-2015-010	$15,035,382
GEN-2015-014	$6,055,878
GEN-2015-018	$4,842,162
GEN-2015-020	$6,190,604
GEN-2015-022	$5,868,077
Total Allocated Costs	**$65,000,000**

Potter County Interchange 345/230/13kV Transformer CKT 2 **$15,000,000**

Build second 345/230/13kV transformer at Potter County

ASGI-2015-002	$18,834
ASGI-2015-003	$9,315
GEN-2014-038	$4,665,603
GEN-2014-046	$623,512
GEN-2014-065	$696,453
GEN-2014-074	$862,702
GEN-2015-009	$2,169,740
GEN-2015-010	$1,261,224
GEN-2015-014	$1,334,999
GEN-2015-018	$562,791
GEN-2015-020	$413,842
GEN-2015-022	$2,380,986
Total Allocated Costs	**$15,000,000**

* Withdrawal of higher queued projects will cause a restudy and may result in higher costs

Tolk - Pleasant Hill 345kV CKT 1 **$50,000,000**

Build approximately 50 miles of 345kV from Tolk - Pleasant Hill

ASGI-2015-002	$72,282
ASGI-2015-003	$2,442,858
GEN-2014-046	$5,514,236
GEN-2014-065	$5,694,290
GEN-2014-074	$3,318,456
GEN-2015-009	$16,593,642
GEN-2015-010	$2,167,642
GEN-2015-014	$6,986,904
GEN-2015-018	$1,487,847
GEN-2015-020	$3,339,833
GEN-2015-022	$2,382,011
Total Allocated Costs	**$50,000,000**

TUCO 2 - Border 345kV CKT 2 **$194,000,000**

Build approximately 194 miles of second circuit 345kV from TUCO 2 - Border

ASGI-2015-002	$344,280
ASGI-2015-003	$3,258,255
GEN-2014-046	$16,603,391
GEN-2014-065	$15,145,990
GEN-2014-074	$24,778,940
GEN-2015-009	$46,623,914
GEN-2015-010	$29,461,307
GEN-2015-014	$23,436,485
GEN-2015-018	$9,222,692
GEN-2015-020	$11,393,741
GEN-2015-022	$13,731,006
Total Allocated Costs	**$194,000,000**

* Withdrawal of higher queued projects will cause a restudy and may result in higher costs

TUCO 2 - Yoakum 345kV Retermination **$5,000,000**

Incremental Upgrade for SPP-NTC-200283 to reterminate TUCO terminal to TUCO 2 terminal by adding approximately 3 miles of 345kV

ASGI-2015-002	$2,324
ASGI-2015-003	$58,106
GEN-2014-046	$500,323
GEN-2014-065	$610,941
GEN-2014-074	$248,431
GEN-2015-009	$1,964,525
GEN-2015-010	$506,932
GEN-2015-014	$717,024
GEN-2015-018	$146,650
GEN-2015-020	$202,422
GEN-2015-022	$42,323
Total Allocated Costs	**$5,000,000**

Viola 345/138kV Transformer CKT 2 **$15,000,000**

Build second 345/138/13.8kV transformer at Viola.

GEN-2015-003	$15,000,000
Total Allocated Costs	**$15,000,000**

* Withdrawal of higher queued projects will cause a restudy and may result in higher costs

G: Power Flow Analysis (Constraints Requiring Transmission Reinforcement)

See next page.

SOLUTION	GROUP	SCENARIO	SEASON	SOURCE	DIRECTION	MONITORED ELEMENT	RATEA (MVA)	RATEB(MVA)	TDF	TC%LOADING (% MVA)	CONTINGENCY
FDNSLock-Blown up	06ALL	0	15G	ASGI_15_02		Non-Converged Contingency	0	0	0.26494	-	SPSCONT-02X
FDNSLock-Blown up	06ALL	0	15G	ASGI_15_02		Non-Converged Contingency	319	351	0.24772	-	CARLISLE INTERCHANGE - TUCO INTERCHANGE 230KV CKT 1
FDNSLock-Blown up	06ALL	0	15G	ASGI_15_02		Non-Converged Contingency	478	502	0.23662	-	TUCO INTERCHANGE - TUCO_2 230.00 230KV CKT 1
FDNSLock-Blown up	06ALL	0	15G	ASGI_15_02		Non-Converged Contingency	956	994	0.21107	-	G14-074T 345.00 - OKLAUNION 345KV CKT 1
FDNSLock-Blown up	06ALL	0	15G	ASGI_15_02		Non-Converged Contingency	956	994	0.21107	-	G14-074T 345.00 - TUCO INTERCHANGE 345KV CKT 1
FDNSLock-Blown up	06ALL	0	15G	ASGI_15_02		Non-Converged Contingency	956	994	0.21107	-	OKLAUNION 345KV SWITCHED SHUNT
FDNSLock-Blown up	06ALL	0	15G	ASGI_15_02		Non-Converged Contingency	560	560	0.20902	-	TUCO INTERCHANGE (GE M1022338) 345/230/13.2KV TRANSFORMER CKT 1
FDNSLock-Blown up	06ALL	0	15G	ASGI_15_02		Non-Converged Contingency	478	502	0.20227	-	JONES STATION - TUCO INTERCHANGE 230KV CKT 1
FDNSLock-Blown up	06ALL	0	15G	ASGI_15_02		Non-Converged Contingency	560	644	0.18215	-	TUCO INTERCHANGE (SIEM 8743066) 345/230/13.2KV TRANSFORMER CKT 2
FDNSLock-Blown up	06ALL	0	15G	ASGI_15_02		Non-Converged Contingency	1195	1195	0.18149	-	GRACEMONT - MINCO 345KV CKT 1
FDNSLock-Blown up	06ALL	0	15G	ASGI_15_02		Non-Converged Contingency	1420	1775	0.1801	-	TUCO INTERCHANGE - TUCO_2 345.00 345KV CKT 1
FDNSLock-Blown up	06ALL	0	15G	ASGI_15_02		Non-Converged Contingency	0	0	0.17864	-	SPSCONT-05AX
FDNSLock-Blown up	06ALL	0	15G	ASGI_15_02		Non-Converged Contingency	1792	1792	0.17169	-	CHISHOLM7 345.00 - WOODWARD DISTRICT EHV 345KV CKT 1
FDNSLock-Blown up	06ALL	0	15G	ASGI_15_02		Non-Converged Contingency	1792	1792	0.17118	-	BORDER 7345.00 - CHISHOLM7 345.00 345KV CKT 1
FDNSLock-Blown up	06ALL	0	15G	ASGI_15_02		Non-Converged Contingency	1792	1792	0.17118	-	BORDER 7345.00 - CHISHOLM7 345.00 345KV CKT 2
FDNSLock-Blown up	06ALL	0	15G	ASGI_15_02		Non-Converged Contingency	1420	1775	0.17118	-	BORDER 7345.00 - TUCO_2 345.00 345KV CKT 1
FDNSLock-Blown up	06ALL	0	15G	ASGI_15_02		Non-Converged Contingency	1420	1775	0.17118	-	BORDER 7345.00 - TUCO_2 345.00 345KV CKT 2
FDNSLock-Blown up	06ALL	0	15G	ASGI_15_02		Non-Converged Contingency	560	560	0.16226	-	TUCO_2 345.00 (TUCO_2 XFMR) 345/230/13.2KV TRANSFORMER CKT 1
FDNSLock-Blown up	06ALL	0	15G	ASGI_15_02		Non-Converged Contingency	1330	1940	0.15636	-	CHISHOLM7 345.00 - GRACEMONT 345KV CKT 1
FDNSLock-Blown up	06ALL	0	15G	ASGI_15_02		Non-Converged Contingency	956	1052	0.13247	-	G14_038T 345.00 - Hitchland Interchange 345KV CKT 1
FDNSLock-Blown up	06ALL	0	15G	ASGI_15_02		Non-Converged Contingency	956	1052	0.13247	-	G14_038T 345.00 - POTTER COUNTY INTERCHANGE 345KV CKT 1
FDNSLock-Blown up	06ALL	0	15G	ASGI_15_02		Non-Converged Contingency	560	560	0.13247	-	POTTER COUNTY INTERCHANGE (WAUK 90343-A) 345/230/13.2KV TRANSFORMER CKT 1
FDNSLock-Blown up	06ALL	0	15G	ASGI_15_02		Non-Converged Contingency	319	351	0.13097	-	LUBBOCK SOUTH INTERCHANGE - WOLFFORTH INTERCHANGE 230KV CKT 1
FDNSLock-Blown up	06ALL	0	15G	ASGI_15_02		Non-Converged Contingency	956	1052	0.11241	-	FINNEY SWITCHING STATION - Hitchland Interchange 345KV CKT 1
FDNSLock-Blown up	06ALL	0	15G	ASGI_15_02		Non-Converged Contingency	956	1052	0.11241	-	FINNEY SWITCHING STATION - HOLCOMB 345KV CKT 1
FDNSLock-Blown up	06ALL	0	15G	ASGI_15_02		Non-Converged Contingency	0	0	0.11241	-	SPP-SWPS-05
FDNSLock-Blown up	06ALL	0	15G	ASGI_15_02		Non-Converged Contingency	0	0	0.10663	-	SPP-SWPS-06
FDNSLock-Blown up	06ALL	0	15G	ASGI_15_02		Non-Converged Contingency	319	351	0.103	-	BUSHLAND INTERCHANGE - DEAF SMITH COUNTY INTERCHANGE 230KV CKT 1
FDNSLock-Blown up	06ALL	0	15G	ASGI_15_02		Non-Converged Contingency	319	351	0.103	-	BUSHLAND INTERCHANGE 230KV SWITCHED SHUNT
FDNSLock-Blown up	06ALL	0	15G	ASGI_15_02		Non-Converged Contingency	478	502	0.09745	-	NEWHART 230 - POTTER COUNTY INTERCHANGE 230KV CKT 1
FDNSLock-Blown up	06ALL	0	15G	ASGI_15_02		Non-Converged Contingency	319	351	0.09275	-	BUSHLAND INTERCHANGE - POTTER COUNTY INTERCHANGE 230KV CKT 1
FDNSLock-Blown up	06ALL	0	15G	ASGI_15_02		Non-Converged Contingency	319	351	0.09227	-	AMARILLO SOUTH INTERCHANGE - SWISHER COUNTY INTERCHANGE 230KV CKT 1
FDNSLock-Blown up	06ALL	0	15G	ASGI_15_02		Non-Converged Contingency	478	478	0.09078	-	DEAF SMITH COUNTY INTERCHANGE - G14-068T 230.00 230KV CKT 1
FDNSLock-Blown up	06ALL	0	15G	ASGI_15_02		Non-Converged Contingency	478	478	0.09078	-	G14-068T 230.00 - PLANT X STATION 230KV CKT 1
FDNSLock-Blown up	06ALL	0	15G	ASGI_15_02		Non-Converged Contingency	0	0	0.08935	-	SPP-SWPS-02
FDNSLock-Blown up	06ALL	0	15G	ASGI_15_02		Non-Converged Contingency	1420	1775	0.08932	-	G11_051T 345.00 - TATONGA7 345.00 345KV CKT 1
FDNSLock-Blown up	06ALL	0	15G	ASGI_15_02		Non-Converged Contingency	1420	1775	0.08932	-	G11_051T 345.00 - WOODWARD DISTRICT EHV 345KV CKT 1
FDNSLock-Blown up	06ALL	0	15G	ASGI_15_02		Non-Converged Contingency	1195	1195	0.08932	-	NORTHWEST - TATONGA7 345.00 345KV CKT 1
FDNSLock-Blown up	06ALL	0	15G	ASGI_15_02		Non-Converged Contingency	0	0	0.08932	-	SPSCONT-04
FDNSLock-Blown up	06ALL	0	15G	ASGI_15_02		Non-Converged Contingency	0	0	0.08932	-	SPSCONT-05B
FDNSLock-Blown up	06ALL	0	15G	ASGI_15_02		Non-Converged Contingency	0	0	0.08524	-	SPP-SWPS-03
FDNSLock-Blown up	06ALL	0	15G	ASGI_15_02		Non-Converged Contingency	478	502	0.07936	-	NEWHART 230 - PLANT X STATION 230KV CKT 1
FDNSLock-Blown up	06ALL	0	15G	ASGI_15_02		Non-Converged Contingency	1420	1775	0.06199	-	G11-14T 345.00 - WOODWARD DISTRICT EHV 345KV CKT 1
FDNSLock-Blown up	06ALL	0	15G	ASGI_15_02		Non-Converged Contingency	1420	1775	0.06199	-	G11-14T 345.00 - WOODWARD DISTRICT EHV 345KV CKT 2
FDNSLock-Blown up	06ALL	0	15G	ASGI_15_02		Non-Converged Contingency	0	0	0.06122	-	SPP-SWPS-T59
FDNSLock-Blown up	06ALL	0	15G	ASGI_15_02		Non-Converged Contingency	439	439	0.05898	-	CHISHOLM6 230.00 - ELK CITY 230KV 230KV CKT 1
FDNSLock-Blown up	06ALL	0	15G	ASGI_15_02		Non-Converged Contingency	287	316	0.05898	-	ELK CITY 230KV (ELKCTY-6) 230/138/13.8KV TRANSFORMER CKT 1
FDNSLock-Blown up	06ALL	0	15G	ASGI_15_02		Non-Converged Contingency	478	502	0.05579	-	HITCHLAND INTERCHANGE - MOORE COUNTY INTERCHANGE 230KV CKT 1
FDNSLock-Blown up	06ALL	0	15G	ASGI_15_02		Non-Converged Contingency	478	502	0.05579	-	HITCHLAND INTERCHANGE - MOORE COUNTY INTERCHANGE 230KV CKT 1
FDNSLock-Blown up	06ALL	0	15G	ASGI_15_02		Non-Converged Contingency	1413	1517	0.05032	-	BUCKNER7 345.00 - SPEARVILLE 345KV CKT 1
FDNSLock-Blown up	06ALL	0	15G	ASGI_15_02		Non-Converged Contingency	319	351	0.04845	-	MOORE COUNTY INTERCHANGE - POTTER COUNTY INTERCHANGE 230KV CKT 1
FDNSLock-Blown up	06ALL	0	15G	ASGI_15_02		Non-Converged Contingency	319	351	0.04845	-	MOORE COUNTY INTERCHANGE - POTTER COUNTY INTERCHANGE 230KV CKT 1
FDNSLock-Blown up	06ALL	0	15G	ASGI_15_02		Non-Converged Contingency	319	351	0.04581	-	G13_027T 230.00 - TOLK STATION WEST 230KV CKT 1
FDNSLock-Blown up	06ALL	0	15G	ASGI_15_02		Non-Converged Contingency	439	439	0.04468	-	CHISHOLM6 230.00 - SWEETWATER 230KV CKT 1
FDNSLock-Blown up	06ALL	0	15G	ASGI_15_02		Non-Converged Contingency	319	351	0.04468	-	GRAPEVINE INTERCHANGE - STATELINE INTERCHANGE 230KV CKT 1
FDNSLock-Blown up	06ALL	0	15G	ASGI_15_02		Non-Converged Contingency	349	395	0.04468	-	STATELINE INTERCHANGE - STLN-DEMARC6 230KV CKT 1
FDNSLock-Blown up	06ALL	0	15G	ASGI_15_02		Non-Converged Contingency	396	441	0.04468	-	STLN-DEMARC6 - SWEETWATER 230KV CKT 1
FDNSLock-Blown up	06ALL	0	15G	ASGI_15_02		Non-Converged Contingency	319	351	0.04056	-	GRAPEVINE INTERCHANGE - NICHOLS STATION 230KV CKT 1
FDNSLock-Blown up	06ALL	0	15SP	ASGI_15_02		Non-Converged Contingency	0	0	0.27834	-	SPSCONT-02X
FDNSLock-Blown up	06ALL	0	15SP	ASGI_15_02		Non-Converged Contingency	956	994	0.21737	-	G14-074T 345.00 - OKLAUNION 345KV CKT 1
FDNSLock-Blown up	06ALL	0	15SP	ASGI_15_02		Non-Converged Contingency	956	994	0.21737	-	G14-074T 345.00 - TUCO INTERCHANGE 345KV CKT 1
FDNSLock-Blown up	06ALL	0	15SP	ASGI_15_02		Non-Converged Contingency	1420	1775	0.17539	-	BORDER 7345.00 - TUCO_2 345.00 345KV CKT 1
FDNSLock-Blown up	06ALL	0	15SP	ASGI_15_02		Non-Converged Contingency	1420	1775	0.17539	-	BORDER 7345.00 - TUCO_2 345.00 345KV CKT 2
FDNSLock-Blown up	06ALL	0	15SP	ASGI_15_02		Non-Converged Contingency	956	1052	0.13917	-	G14_038T 345.00 - Hitchland Interchange 345KV CKT 1
FDNSLock-Blown up	06ALL	0	15SP	ASGI_15_02		Non-Converged Contingency	478	478	0.09155	-	G14-068T 230.00 - PLANT X STATION 230KV CKT 1
FDNSLock-Blown up	06ALL	0	15WP	ASGI_15_02		Non-Converged Contingency	1033	1071	0.22245	-	G14-074T 345.00 - OKLAUNION 345KV CKT 1
FDNSLock-Blown up	06ALL	0	20SP	ASGI_15_02		Non-Converged Contingency	956	994	0.28334	-	G14-074T 345.00 - OKLAUNION 345KV CKT 1
FDNSLock-Blown up	06ALL	0	20WP	ASGI_15_02		Non-Converged Contingency	0	0	0.29126	-	SPSCONT-02X
FDNSLock-Blown up	06ALL	0	20WP	ASGI_15_02		Non-Converged Contingency	1033	1071	0.28033	-	G14-074T 345.00 - OKLAUNION 345KV CKT 1
FDNSLock-Blown up	06ALL	0	20WP	ASGI_15_02		Non-Converged Contingency	1033	1071	0.28033	-	G14-074T 345.00 - TUCO INTERCHANGE 345KV CKT 1
FDNSLock-Blown up	06ALL	0	20WP	ASGI_15_02		Non-Converged Contingency	1420	1775	0.21862	-	BORDER 7345.00 - TUCO_2 345.00 345KV CKT 1
FDNSLock-Blown up	06ALL	0	20WP	ASGI_15_02		Non-Converged Contingency	1792	1792	0.21862	-	BORDER 7345.00 - WOODWARD DISTRICT EHV 345KV CKT 1
FDNSLock-Blown up	06ALL	0	20WP	ASGI_15_02		Non-Converged Contingency	956	1052	0.14563	-	G14_038T 345.00 - Hitchland Interchange 345KV CKT 1
FDNSLock-Blown up	06ALL	2	15G	ASGI_15_02		Non-Converged Contingency	0	0	0.25885	-	SPSCONT-02X
FDNSLock-Blown up	06ALL	2	15G	ASGI_15_02		Non-Converged Contingency	956	994	0.21601	-	G14-074T 345.00 - OKLAUNION 345KV CKT 1

SOLUTION	GROUP	SCENARIO	SEASON	SOURCE	DIRECTION	MONITORED ELEMENT	RATEA (MVA)	RATEB(MVA)	TDF	TC%LOADING (% MVA)	CONTINGENCY
FDNSLock-Blown up	06ALL	2	15G	ASGI_15_02		Non-Converged Contingency	956	994	0.21601	-	G14-074T 345.00 - TUCO INTERCHANGE 345KV CKT 1
FDNSLock-Blown up	06ALL	2	15G	ASGI_15_02		Non-Converged Contingency	1420	1775	0.17595	-	BORDER 7345.00 - TUCO_2 345.00 345KV CKT 1
FDNSLock-Blown up	06ALL	2	15G	ASGI_15_02		Non-Converged Contingency	1420	1775	0.17595	-	BORDER 7345.00 - TUCO_2 345.00 345KV CKT 2
FDNSLock-Blown up	06ALL	2	15G	ASGI_15_02		Non-Converged Contingency	956	1052	0.12943	-	G14_038T 345.00 - Hitchland Interchange 345KV CKT 1
FDNSLock-Blown up	06ALL	2	15G	ASGI_15_02		Non-Converged Contingency	956	1052	0.12943	-	G14_038T 345.00 - POTTER COUNTY INTERCHANGE 345KV CKT 1
FDNSLock-Blown up	06ALL	2	15G	ASGI_15_02		Non-Converged Contingency	560	560	0.12943	-	POTTER COUNTY INTERCHANGE (WAUK 90343-A) 345/230/13.2KV TRANSFORMER CKT 1
FDNSLock-Blown up	06ALL	2	15SP	ASGI_15_02		Non-Converged Contingency	956	994	0.22179	-	G14-074T 345.00 - OKLAUNION 345KV CKT 1
FDNSLock-Blown up	06ALL	2	15WP	ASGI_15_02		Non-Converged Contingency	1033	1071	0.22688	-	G14-074T 345.00 - OKLAUNION 345KV CKT 1
FDNSLock-Blown up	06ALL	3	15G	ASGI_15_02		Non-Converged Contingency	0	0	0.3284	-	SPSCONT-02X
FDNSLock-Blown up	06ALL	3	15G	ASGI_15_02		Non-Converged Contingency	956	994	0.20467	-	G14-074T 345.00 - OKLAUNION 345KV CKT 1
FDNSLock-Blown up	06ALL	3	15G	ASGI_15_02		Non-Converged Contingency	956	1052	0.1642	-	G14_038T 345.00 - Hitchland Interchange 345KV CKT 1
FDNSLock-Blown up	06ALL	3	15G	ASGI_15_02		Non-Converged Contingency	956	1052	0.1642	-	G14_038T 345.00 - POTTER COUNTY INTERCHANGE 345KV CKT 1
FDNS	06ALL	0	15SP	ASGI_15_02	TO->FROM	CARLISLE INTERCHANGE - LP-DOUD_TP 3115.00 115KV CKT 1	159	160	0.64658	112.1013	LUBBOCK SOUTH INTERCHANGE - WOLFFORTH INTERCHANGE 230KV CKT 1
FDNS	06ALL	0	15SP	ASGI_15_02	FROM->TO	ELK CITY 230KV (ELKCTY-6) 230/138/13.8KV TRANSFORMER CKT 1	272	316	0.06374	125.7575	BASE CASE
FDNS	06ALL	0	15SP	ASGI_15_02	FROM->TO	ELK CITY 230KV (ELKCTY-6) 230/138/13.8KV TRANSFORMER CKT 1	272	316	0.06374	124.0328	BASE CASE
FDNS	06ALL	0	15G	ASGI_15_02	FROM->TO	ELK CITY 230KV (ELKCTY-6) 230/138/13.8KV TRANSFORMER CKT 1	287	316	0.05898	112.017	BASE CASE
FDNS	06ALL	0	15G	ASGI_15_02	FROM->TO	ELK CITY 230KV (ELKCTY-6) 230/138/13.8KV TRANSFORMER CKT 1	287	316	0.05898	110.2834	BASE CASE
FDNS	06ALL	0	15WP	ASGI_15_02	FROM->TO	ELK CITY 230KV (ELKCTY-6) 230/138/13.8KV TRANSFORMER CKT 1	287	316	0.06557	107.7723	BASE CASE
FDNS	06ALL	0	15WP	ASGI_15_02	FROM->TO	ELK CITY 230KV (ELKCTY-6) 230/138/13.8KV TRANSFORMER CKT 1	287	316	0.06557	106.4302	BASE CASE
FDNS	06ALL	0	20WP	ASGI_15_02	TO->FROM	GRAPEVINE INTERCHANGE - NICHOLS STATION 230KV CKT 1	329	361	0.07433	121.1428	BASE CASE
FDNS	06ALL	0	15G	ASGI_15_02	TO->FROM	GRAPEVINE INTERCHANGE - NICHOLS STATION 230KV CKT 1	319	351	0.04056	105.2692	BASE CASE
FDNS	06ALL	0	20SP	ASGI_15_02	TO->FROM	GRAPEVINE INTERCHANGE - NICHOLS STATION 230KV CKT 1	319	351	0.07619	99.5	BASE CASE
FDNS	06ALL	0	15SP	ASGI_15_02	TO->FROM	LP-DOUD_TP 3115.00 - SP-WOLF_TP 3115.00 115KV CKT 1	159	175	0.64658	114.9744	LUBBOCK SOUTH INTERCHANGE - WOLFFORTH INTERCHANGE 230KV CKT 1
FDNS	06ALL	0	15G	ASGI_15_02	TO->FROM	LUBBOCK SOUTH INTERCHANGE - WOLFFORTH INTERCHANGE 230KV CKT 1	319	351	0.51205	100.9916	SP-WOLF_TP 3115.00 - YUMA INTERCHANGE 115KV CKT 1
FDNS	06ALL	0	15SP	ASGI_15_02	TO->FROM	SP-WOLF_TP 3115.00 - YUMA INTERCHANGE 115KV CKT 1	159	175	0.64658	124.2367	LUBBOCK SOUTH INTERCHANGE - WOLFFORTH INTERCHANGE 230KV CKT 1
FDNS	06ALL	0	15SP	ASGI_15_02	TO->FROM	SP-WOLF_TP 3115.00 - YUMA INTERCHANGE 115KV CKT 1	159	175	0.58956	100.3393	TOLK STATION EAST - TUCO INTERCHANGE 230KV CKT 1
FDNS	06ALL	0	15SP	ASGI_15_02	FROM->TO	TUCO INTERCHANGE - TUCO_2 230.00 230KV CKT 1	478	502	0.39273	171.3069	TUCO INTERCHANGE - TUCO_2 345.00 345KV CKT 1
FDNS	06ALL	0	15WP	ASGI_15_02	FROM->TO	TUCO INTERCHANGE - TUCO_2 230.00 230KV CKT 1	557	557	0.39917	134.3573	TUCO INTERCHANGE - TUCO_2 345.00 345KV CKT 1
FDNS	06ALL	0	15SP	ASGI_15_02	FROM->TO	TUCO INTERCHANGE - TUCO_2 230.00 230KV CKT 1	478	502	0.33658	117.2904	TUCO INTERCHANGE (GE M1022338) 345/230/13.2KV TRANSFORMER CKT 1
FDNS	06ALL	0	15SP	ASGI_15_02	FROM->TO	TUCO INTERCHANGE - TUCO_2 230.00 230KV CKT 1	478	502	0.31832	109.6173	TUCO INTERCHANGE (SIEM 8743066) 345/230/13.2KV TRANSFORMER CKT 2
FDNS	06ALL	0	15SP	ASGI_15_02	FROM->TO	TUCO INTERCHANGE - TUCO_2 230.00 230KV CKT 1	478	502	0.26213	105.6028	NEWHART 230 - PLANT X STATION 230KV CKT 1
FDNS	06ALL	0	15WP	ASGI_15_02	FROM->TO	TUCO INTERCHANGE - TUCO_2 230.00 230KV CKT 1	557	557	0.34217	104.677	TUCO INTERCHANGE (GE M1022338) 345/230/13.2KV TRANSFORMER CKT 1
FDNS	06ALL	0	15G	ASGI_15_02	FROM->TO	TUCO INTERCHANGE - TUCO_2 230.00 230KV CKT 1	478	502	0.23726	103.9114	NEWHART 230 - SWISHER COUNTY INTERCHANGE 230KV CKT 1
FDNS	06ALL	0	20SP	ASGI_15_02	FROM->TO	TUCO INTERCHANGE - TUCO_2 230.00 230KV CKT 1	478	502	0.32274	101.2947	TUCO INTERCHANGE - TUCO_2 345.00 345KV CKT 1
FDNS	06ALL	0	15WP	ASGI_15_02	FROM->TO	TUCO INTERCHANGE (GE M1022338) 345/230/13.2KV TRANSFORMER CKT 1	560	560	0.32086	123.6189	TUCO INTERCHANGE (SIEM 8743066) 345/230/13.2KV TRANSFORMER CKT 2
FDNS	06ALL	0	15WP	ASGI_15_02	FROM->TO	TUCO INTERCHANGE (GE M1022338) 345/230/13.2KV TRANSFORMER CKT 1	560	560	0.32086	121.7966	TUCO INTERCHANGE (SIEM 8743066) 345/230/13.2KV TRANSFORMER CKT 2
FDNS	06ALL	0	15WP	ASGI_15_02	FROM->TO	TUCO INTERCHANGE (GE M1022338) 345/230/13.2KV TRANSFORMER CKT 1	560	560	0.30356	120.4848	TUCO_2 345.00 (TUCO_2 XFMR) 345/230/13.2KV TRANSFORMER CKT 1
FDNS	06ALL	0	15WP	ASGI_15_02	FROM->TO	TUCO INTERCHANGE (GE M1022338) 345/230/13.2KV TRANSFORMER CKT 1	560	560	0.30356	118.8811	TUCO_2 345.00 (TUCO_2 XFMR) 345/230/13.2KV TRANSFORMER CKT 1
FDNS	06ALL	0	15SP	ASGI_15_02	FROM->TO	TUCO INTERCHANGE (GE M1022338) 345/230/13.2KV TRANSFORMER CKT 1	560	560	0.31415	113.3311	TUCO INTERCHANGE (SIEM 8743066) 345/230/13.2KV TRANSFORMER CKT 2
FDNS	06ALL	0	15WP	ASGI_15_02	FROM->TO	TUCO INTERCHANGE (GE M1022338) 345/230/13.2KV TRANSFORMER CKT 1	560	560	0.32737	112.9697	TUCO INTERCHANGE - TUCO_2 230.00 230KV CKT 1
FDNS	06ALL	0	15WP	ASGI_15_02	FROM->TO	TUCO INTERCHANGE (GE M1022338) 345/230/13.2KV TRANSFORMER CKT 1	560	560	0.32737	111.3776	TUCO INTERCHANGE - TUCO_2 230.00 230KV CKT 1
FDNS	06ALL	0	15SP	ASGI_15_02	FROM->TO	TUCO INTERCHANGE (GE M1022338) 345/230/13.2KV TRANSFORMER CKT 1	560	560	0.31415	111.3719	TUCO INTERCHANGE (SIEM 8743066) 345/230/13.2KV TRANSFORMER CKT 2
FDNS	06ALL	0	15SP	ASGI_15_02	FROM->TO	TUCO INTERCHANGE (GE M1022338) 345/230/13.2KV TRANSFORMER CKT 1	560	560	0.29703	110.0342	TUCO_2 345.00 (TUCO_2 XFMR) 345/230/13.2KV TRANSFORMER CKT 1
FDNS	06ALL	0	15SP	ASGI_15_02	FROM->TO	TUCO INTERCHANGE (GE M1022338) 345/230/13.2KV TRANSFORMER CKT 1	560	560	0.29703	108.332	TUCO_2 345.00 (TUCO_2 XFMR) 345/230/13.2KV TRANSFORMER CKT 1
FDNS	06ALL	0	15SP	ASGI_15_02	FROM->TO	TUCO INTERCHANGE (GE M1022338) 345/230/13.2KV TRANSFORMER CKT 1	560	560	0.32122	107.9073	TUCO INTERCHANGE - TUCO_2 230.00 230KV CKT 1
FDNS	06ALL	0	15SP	ASGI_15_02	FROM->TO	TUCO INTERCHANGE (GE M1022338) 345/230/13.2KV TRANSFORMER CKT 1	560	560	0.32122	105.9346	TUCO INTERCHANGE - TUCO_2 230.00 230KV CKT 1
FDNS	06ALL	0	15G	ASGI_15_02	FROM->TO	TUCO INTERCHANGE (GE M1022338) 345/230/13.2KV TRANSFORMER CKT 1	560	560	0.20902	100.8349	GEN562655 1-G14_074_3 0.6900
FDNS	06ALL	0	15SP	ASGI_15_02	FROM->TO	TUCO_2 345.00 (TUCO_2 XFMR) 345/230/13.2KV TRANSFORMER CKT 1	560	560	0.32043	145.8188	TUCO INTERCHANGE - TUCO_2 345.00 345KV CKT 1
FDNS	06ALL	0	15SP	ASGI_15_02	FROM->TO	TUCO_2 345.00 (TUCO_2 XFMR) 345/230/13.2KV TRANSFORMER CKT 1	560	560	0.32043	142.7342	TUCO INTERCHANGE - TUCO_2 345.00 345KV CKT 1
FDNS	06ALL	0	15WP	ASGI_15_02	FROM->TO	TUCO_2 345.00 (TUCO_2 XFMR) 345/230/13.2KV TRANSFORMER CKT 1	560	560	0.32728	138.8622	TUCO INTERCHANGE - TUCO_2 345.00 345KV CKT 1
FDNS	06ALL	0	15WP	ASGI_15_02	FROM->TO	TUCO_2 345.00 (TUCO_2 XFMR) 345/230/13.2KV TRANSFORMER CKT 1	560	560	0.32728	136.3817	TUCO INTERCHANGE - TUCO_2 345.00 345KV CKT 1
FDNS	06ALL	0	15WP	ASGI_15_02	FROM->TO	TUCO_2 345.00 (TUCO_2 XFMR) 345/230/13.2KV TRANSFORMER CKT 1	560	560	0.26736	109.7547	TUCO INTERCHANGE (GE M1022338) 345/230/13.2KV TRANSFORMER CKT 1
FDNS	06ALL	0	15WP	ASGI_15_02	FROM->TO	TUCO_2 345.00 (TUCO_2 XFMR) 345/230/13.2KV TRANSFORMER CKT 1	560	560	0.26736	108.6761	TUCO INTERCHANGE (GE M1022338) 345/230/13.2KV TRANSFORMER CKT 1
FDNS	06ALL	0	15WP	ASGI_15_02	FROM->TO	TUCO_2 345.00 (TUCO_2 XFMR) 345/230/13.2KV TRANSFORMER CKT 1	560	560	0.2492	102.7663	TUCO INTERCHANGE (SIEM 8743066) 345/230/13.2KV TRANSFORMER CKT 2
FDNS	06ALL	0	15WP	ASGI_15_02	FROM->TO	TUCO_2 345.00 (TUCO_2 XFMR) 345/230/13.2KV TRANSFORMER CKT 1	560	560	0.2492	101.7947	TUCO INTERCHANGE (SIEM 8743066) 345/230/13.2KV TRANSFORMER CKT 2
FDNS	06ALL	0	15SP	ASGI_15_02	FROM->TO	TUCO_2 345.00 (TUCO_2 XFMR) 345/230/13.2KV TRANSFORMER CKT 1	560	560	0.26141	99.6	TUCO INTERCHANGE (GE M1022338) 345/230/13.2KV TRANSFORMER CKT 1
FDNS	06ALL	2	15SP	ASGI_15_02	FROM->TO	ELK CITY 230KV (ELKCTY-6) 230/138/13.8KV TRANSFORMER CKT 1	272	316	0.06379	125.7818	BASE CASE
FDNS	06ALL	2	15SP	ASGI_15_02	FROM->TO	ELK CITY 230KV (ELKCTY-6) 230/138/13.8KV TRANSFORMER CKT 1	272	316	0.06379	124.4125	BASE CASE
FDNS	06ALL	2	15G	ASGI_15_02	FROM->TO	ELK CITY 230KV (ELKCTY-6) 230/138/13.8KV TRANSFORMER CKT 1	287	316	0.05947	111.2694	BASE CASE
FDNS	06ALL	2	15G	ASGI_15_02	FROM->TO	ELK CITY 230KV (ELKCTY-6) 230/138/13.8KV TRANSFORMER CKT 1	287	316	0.05947	110.3238	BASE CASE
FDNS	06ALL	2	15WP	ASGI_15_02	FROM->TO	ELK CITY 230KV (ELKCTY-6) 230/138/13.8KV TRANSFORMER CKT 1	287	316	0.06556	107.6385	BASE CASE
FDNS	06ALL	2	15WP	ASGI_15_02	FROM->TO	ELK CITY 230KV (ELKCTY-6) 230/138/13.8KV TRANSFORMER CKT 1	287	316	0.06556	106.6339	BASE CASE
FDNS	06ALL	2	20SP	ASGI_15_02	FROM->TO	ELK CITY 230KV (ELKCTY-6) 230/138/13.8KV TRANSFORMER CKT 1	272	316	0.06397	103.949	BASE CASE
FDNS	06ALL	2	20SP	ASGI_15_02	FROM->TO	ELK CITY 230KV (ELKCTY-6) 230/138/13.8KV TRANSFORMER CKT 1	272	316	0.06397	103.7414	BASE CASE
FDNS	06ALL	2	20WP	ASGI_15_02	FROM->TO	ELK CITY 230KV (ELKCTY-6) 230/138/13.8KV TRANSFORMER CKT 1	287	316	0.06322	101.967	BASE CASE
FDNS	06ALL	2	20WP	ASGI_15_02	FROM->TO	ELK CITY 230KV (ELKCTY-6) 230/138/13.8KV TRANSFORMER CKT 1	287	316	0.06322	101.2457	BASE CASE
FDNS	06ALL	2	15G	ASGI_15_02	FROM->TO	TUCO INTERCHANGE - TUCO_2 230.00 230KV CKT 1	478	502	0.39916	200.4231	TUCO INTERCHANGE - TUCO_2 345.00 345KV CKT 1
FDNS	06ALL	2	15SP	ASGI_15_02	FROM->TO	TUCO INTERCHANGE - TUCO_2 230.00 230KV CKT 1	478	502	0.40602	183.8625	TUCO INTERCHANGE - TUCO_2 345.00 345KV CKT 1
FDNS	06ALL	2	15WP	ASGI_15_02	FROM->TO	TUCO INTERCHANGE - TUCO_2 230.00 230KV CKT 1	557	557	0.41292	142.2485	TUCO INTERCHANGE - TUCO_2 345.00 345KV CKT 1
FDNS	06ALL	2	20SP	ASGI_15_02	FROM->TO	TUCO INTERCHANGE - TUCO_2 230.00 230KV CKT 1	478	502	0.40634	137.8459	TUCO INTERCHANGE - TUCO_2 345.00 345KV CKT 1
FDNS	06ALL	2	15G	ASGI_15_02	FROM->TO	TUCO INTERCHANGE - TUCO_2 230.00 230KV CKT 1	478	502	0.3069	113.2048	TUCO INTERCHANGE (GE M1022338) 345/230/13.2KV TRANSFORMER CKT 1
FDNS	06ALL	2	15G	ASGI_15_02	FROM->TO	TUCO INTERCHANGE - TUCO_2 230.00 230KV CKT 1	478	502	0.29213	106.3119	TUCO INTERCHANGE (SIEM 8743066) 345/230/13.2KV TRANSFORMER CKT 2
FDNS	06ALL	2	15G	ASGI_15_02	FROM->TO	TUCO INTERCHANGE (GE M1022338) 345/230/13.2KV TRANSFORMER CKT 1	560	560	0.26555	105.7863	TUCO INTERCHANGE (SIEM 8743066) 345/230/13.2KV TRANSFORMER CKT 2
FDNS	06ALL	2	15G	ASGI_15_02	FROM->TO	TUCO INTERCHANGE (GE M1022338) 345/230/13.2KV TRANSFORMER CKT 1	560	560	0.25043	103.2984	TUCO_2 345.00 (TUCO_2 XFMR) 345/230/13.2KV TRANSFORMER CKT 1
FDNS	06ALL	2	15G	ASGI_15_02	FROM->TO	TUCO INTERCHANGE (GE M1022338) 345/230/13.2KV TRANSFORMER CKT 1	560	560	0.28345	102.6247	TUCO INTERCHANGE - TUCO_2 230.00 230KV CKT 1

SOLUTION	GROUP	SCENARIO	SEASON	SOURCE	DIRECTION	MONITORED ELEMENT	RATEA (MVA)	RATEB(MVA)	TDF	TC%LOADING (% MVA)	CONTINGENCY
FDNS	06ALL	2	15G	ASGI_15_02	FROM->TO	TUCO INTERCHANGE (GE M1022338) 345/230/13.2KV TRANSFORMER CKT 1	560	560	0.26555	102.4959	TUCO INTERCHANGE (SIEM 8743066) 345/230/13.2KV TRANSFORMER CKT 2
FDNS	06ALL	2	15G	ASGI_15_02	FROM->TO	TUCO INTERCHANGE (GE M1022338) 345/230/13.2KV TRANSFORMER CKT 1	560	560	0.25043	100.3016	TUCO_2 345.00 (TUCO_2 XFMR) 345/230/13.2KV TRANSFORMER CKT 1
FDNS	06ALL	2	20WP	ASGI_15_02	FROM->TO	TUCO INTERCHANGE (GE M1022338) 345/230/13.2KV TRANSFORMER CKT 1	560	560	0.27224	99.8	TUCO INTERCHANGE (SIEM 8743066) 345/230/13.2KV TRANSFORMER CKT 2
FDNS	06ALL	2	15G	ASGI_15_02	FROM->TO	TUCO INTERCHANGE (GE M1022338) 345/230/13.2KV TRANSFORMER CKT 1	560	560	0.28345	99.7	TUCO INTERCHANGE - TUCO_2 230.00 230KV CKT 1
FDNS	06ALL	2	15G	ASGI_15_02	FROM->TO	TUCO_2 345.00 (TUCO_2 XFMR) 345/230/13.2KV TRANSFORMER CKT 1	560	560	0.31669	167.6169	TUCO INTERCHANGE - TUCO_2 345.00 345KV CKT 1
FDNS	06ALL	2	15G	ASGI_15_02	FROM->TO	TUCO_2 345.00 (TUCO_2 XFMR) 345/230/13.2KV TRANSFORMER CKT 1	560	560	0.31669	164.2629	TUCO INTERCHANGE - TUCO_2 345.00 345KV CKT 1
FDNS	06ALL	2	15SP	ASGI_15_02	FROM->TO	TUCO_2 345.00 (TUCO_2 XFMR) 345/230/13.2KV TRANSFORMER CKT 1	560	560	0.32397	149.8147	TUCO INTERCHANGE - TUCO_2 345.00 345KV CKT 1
FDNS	06ALL	2	15SP	ASGI_15_02	FROM->TO	TUCO_2 345.00 (TUCO_2 XFMR) 345/230/13.2KV TRANSFORMER CKT 1	560	560	0.32397	147.216	TUCO INTERCHANGE - TUCO_2 345.00 345KV CKT 1
FDNS	06ALL	2	15WP	ASGI_15_02	FROM->TO	TUCO_2 345.00 (TUCO_2 XFMR) 345/230/13.2KV TRANSFORMER CKT 1	560	560	0.33063	141.8557	TUCO INTERCHANGE - TUCO_2 345.00 345KV CKT 1
FDNS	06ALL	2	15WP	ASGI_15_02	FROM->TO	TUCO_2 345.00 (TUCO_2 XFMR) 345/230/13.2KV TRANSFORMER CKT 1	560	560	0.33063	139.9334	TUCO INTERCHANGE - TUCO_2 345.00 345KV CKT 1
FDNS	06ALL	2	20SP	ASGI_15_02	FROM->TO	TUCO_2 345.00 (TUCO_2 XFMR) 345/230/13.2KV TRANSFORMER CKT 1	560	560	0.32406	112.3827	TUCO INTERCHANGE - TUCO_2 345.00 345KV CKT 1
FDNS	06ALL	2	20SP	ASGI_15_02	FROM->TO	TUCO_2 345.00 (TUCO_2 XFMR) 345/230/13.2KV TRANSFORMER CKT 1	560	560	0.32406	112.1069	TUCO INTERCHANGE - TUCO_2 345.00 345KV CKT 1
FDNS	06ALL	3	15SP	ASGI_15_02	FROM->TO	ELK CITY 230KV (ELKCTY-6) 230/138/13.8KV TRANSFORMER CKT 1	272	316	0.06274	123.9727	BASE CASE
FDNS	06ALL	3	15SP	ASGI_15_02	FROM->TO	ELK CITY 230KV (ELKCTY-6) 230/138/13.8KV TRANSFORMER CKT 1	272	316	0.06274	122.7526	BASE CASE
FDNS	06ALL	3	15G	ASGI_15_02	FROM->TO	ELK CITY 230KV (ELKCTY-6) 230/138/13.8KV TRANSFORMER CKT 1	287	316	0.05845	109.3338	BASE CASE
FDNS	06ALL	3	15G	ASGI_15_02	FROM->TO	ELK CITY 230KV (ELKCTY-6) 230/138/13.8KV TRANSFORMER CKT 1	287	316	0.05845	108.4212	BASE CASE
FDNS	06ALL	3	15WP	ASGI_15_02	FROM->TO	ELK CITY 230KV (ELKCTY-6) 230/138/13.8KV TRANSFORMER CKT 1	287	316	0.06451	106.1239	BASE CASE
FDNS	06ALL	3	15WP	ASGI_15_02	FROM->TO	ELK CITY 230KV (ELKCTY-6) 230/138/13.8KV TRANSFORMER CKT 1	287	316	0.06451	105.1628	BASE CASE
FDNS	06ALL	3	20SP	ASGI_15_02	FROM->TO	ELK CITY 230KV (ELKCTY-6) 230/138/13.8KV TRANSFORMER CKT 1	272	316	0.06282	102.7547	BASE CASE
FDNS	06ALL	3	20SP	ASGI_15_02	FROM->TO	ELK CITY 230KV (ELKCTY-6) 230/138/13.8KV TRANSFORMER CKT 1	272	316	0.06282	102.5743	BASE CASE
FDNS	06ALL	3	20WP	ASGI_15_02	FROM->TO	ELK CITY 230KV (ELKCTY-6) 230/138/13.8KV TRANSFORMER CKT 1	287	316	0.06212	100.8598	BASE CASE
FDNS	06ALL	3	20WP	ASGI_15_02	FROM->TO	ELK CITY 230KV (ELKCTY-6) 230/138/13.8KV TRANSFORMER CKT 1	287	316	0.06212	100.2492	BASE CASE
FDNS	06ALL	3	15G	ASGI_15_02	TO->FROM	GRAPEVINE INTERCHANGE - NICHOLS STATION 230KV CKT 1	319	351	0.04263	100.925	BASE CASE
FDNS	06ALL	3	15G	ASGI_15_02	FROM->TO	TUCO INTERCHANGE - TUCO_2 230.00 230KV CKT 1	478	502	0.36776	168.7325	TUCO INTERCHANGE - TUCO_2 345.00 345KV CKT 1
FDNS	06ALL	3	15SP	ASGI_15_02	FROM->TO	TUCO INTERCHANGE - TUCO_2 230.00 230KV CKT 1	478	502	0.37405	154.1201	TUCO INTERCHANGE - TUCO_2 345.00 345KV CKT 1
FDNS	06ALL	3	15WP	ASGI_15_02	FROM->TO	TUCO INTERCHANGE - TUCO_2 230.00 230KV CKT 1	557	557	0.38018	120.7037	TUCO INTERCHANGE - TUCO_2 345.00 345KV CKT 1
FDNS	06ALL	3	20SP	ASGI_15_02	FROM->TO	TUCO INTERCHANGE - TUCO_2 230.00 230KV CKT 1	478	502	0.37367	118.0325	TUCO INTERCHANGE - TUCO_2 345.00 345KV CKT 1
FDNS	06ALL	3	20WP	ASGI_15_02	FROM->TO	TUCO INTERCHANGE - TUCO_2 230.00 230KV CKT 1	557	557	0.37159	111.9352	TUCO INTERCHANGE - TUCO_2 345.00 345KV CKT 1
FDNS	06ALL	3	15G	ASGI_15_02	FROM->TO	TUCO_2 345.00 (TUCO_2 XFMR) 345/230/13.2KV TRANSFORMER CKT 1	560	560	0.29473	151.8506	TUCO INTERCHANGE - TUCO_2 345.00 345KV CKT 1
FDNS	06ALL	3	15G	ASGI_15_02	FROM->TO	TUCO_2 345.00 (TUCO_2 XFMR) 345/230/13.2KV TRANSFORMER CKT 1	560	560	0.29473	149.0893	TUCO INTERCHANGE - TUCO_2 345.00 345KV CKT 1
FDNS	06ALL	3	15SP	ASGI_15_02	FROM->TO	TUCO_2 345.00 (TUCO_2 XFMR) 345/230/13.2KV TRANSFORMER CKT 1	560	560	0.30133	133.4173	TUCO INTERCHANGE - TUCO_2 345.00 345KV CKT 1
FDNS	06ALL	3	15SP	ASGI_15_02	FROM->TO	TUCO_2 345.00 (TUCO_2 XFMR) 345/230/13.2KV TRANSFORMER CKT 1	560	560	0.30133	131.8248	TUCO INTERCHANGE - TUCO_2 345.00 345KV CKT 1
FDNS	06ALL	3	15WP	ASGI_15_02	FROM->TO	TUCO_2 345.00 (TUCO_2 XFMR) 345/230/13.2KV TRANSFORMER CKT 1	560	560	0.30748	127.9846	TUCO INTERCHANGE - TUCO_2 345.00 345KV CKT 1
FDNS	06ALL	3	15WP	ASGI_15_02	FROM->TO	TUCO_2 345.00 (TUCO_2 XFMR) 345/230/13.2KV TRANSFORMER CKT 1	560	560	0.30748	126.6738	TUCO INTERCHANGE - TUCO_2 345.00 345KV CKT 1
FDNS	06ALL	3	20WP	ASGI_15_02	FROM->TO	TUCO_2 345.00 (TUCO_2 XFMR) 345/230/13.2KV TRANSFORMER CKT 1	560	560	0.29826	121.9391	TUCO INTERCHANGE - TUCO_2 345.00 345KV CKT 1
FDNS	06ALL	3	20WP	ASGI_15_02	FROM->TO	TUCO_2 345.00 (TUCO_2 XFMR) 345/230/13.2KV TRANSFORMER CKT 1	560	560	0.29826	121.0095	TUCO INTERCHANGE - TUCO_2 345.00 345KV CKT 1
FDNS	06ALL	3	20SP	ASGI_15_02	FROM->TO	TUCO_2 345.00 (TUCO_2 XFMR) 345/230/13.2KV TRANSFORMER CKT 1	560	560	0.301	100.2304	TUCO INTERCHANGE - TUCO_2 345.00 345KV CKT 1
FDNS	06ALL	3	20SP	ASGI_15_02	FROM->TO	TUCO_2 345.00 (TUCO_2 XFMR) 345/230/13.2KV TRANSFORMER CKT 1	560	560	0.301	100.1212	TUCO INTERCHANGE - TUCO_2 345.00 345KV CKT 1
FDNS	06ALL	4	15SP	ASGI_15_02	FROM->TO	CHISHOLM6 230.00 - ELK CITY 230KV 230KV CKT 1	353	353	0.06596	100.9254	BASE CASE
FDNS	06ALL	4	15SP	ASGI_15_02	FROM->TO	ELK CITY 230KV (ELKCTY-6) 230/138/13.8KV TRANSFORMER CKT 1	272	316	0.06596	129.8441	BASE CASE
FDNS	06ALL	4	15SP	ASGI_15_02	FROM->TO	ELK CITY 230KV (ELKCTY-6) 230/138/13.8KV TRANSFORMER CKT 1	272	316	0.06596	128.5805	BASE CASE
FDNS	06ALL	4	15G	ASGI_15_02	FROM->TO	ELK CITY 230KV (ELKCTY-6) 230/138/13.8KV TRANSFORMER CKT 1	287	316	0.06175	116.3182	BASE CASE
FDNS	06ALL	4	15G	ASGI_15_02	FROM->TO	ELK CITY 230KV (ELKCTY-6) 230/138/13.8KV TRANSFORMER CKT 1	287	316	0.06175	115.4161	BASE CASE
FDNS	06ALL	4	15WP	ASGI_15_02	FROM->TO	ELK CITY 230KV (ELKCTY-6) 230/138/13.8KV TRANSFORMER CKT 1	287	316	0.06788	112.0283	BASE CASE
FDNS	06ALL	4	15WP	ASGI_15_02	FROM->TO	ELK CITY 230KV (ELKCTY-6) 230/138/13.8KV TRANSFORMER CKT 1	287	316	0.06788	111.0401	BASE CASE
FDNS	06ALL	4	20SP	ASGI_15_02	FROM->TO	ELK CITY 230KV (ELKCTY-6) 230/138/13.8KV TRANSFORMER CKT 1	272	316	0.06604	107.1637	BASE CASE
FDNS	06ALL	4	20SP	ASGI_15_02	FROM->TO	ELK CITY 230KV (ELKCTY-6) 230/138/13.8KV TRANSFORMER CKT 1	272	316	0.06604	106.9127	BASE CASE
FDNS	06ALL	4	20WP	ASGI_15_02	FROM->TO	ELK CITY 230KV (ELKCTY-6) 230/138/13.8KV TRANSFORMER CKT 1	287	316	0.06534	106.7868	BASE CASE
FDNS	06ALL	4	20WP	ASGI_15_02	FROM->TO	ELK CITY 230KV (ELKCTY-6) 230/138/13.8KV TRANSFORMER CKT 1	287	316	0.06534	106.1189	BASE CASE
FDNS	06ALL	4	15G	ASGI_15_02	FROM->TO	TUCO INTERCHANGE - TUCO_2 230.00 230KV CKT 1	478	502	0.35631	148.7289	TUCO INTERCHANGE - TUCO_2 345.00 345KV CKT 1
FDNS	06ALL	4	15SP	ASGI_15_02	FROM->TO	TUCO INTERCHANGE - TUCO_2 230.00 230KV CKT 1	478	502	0.36194	139.4418	TUCO INTERCHANGE - TUCO_2 345.00 345KV CKT 1
FDNS	06ALL	4	20SP	ASGI_15_02	FROM->TO	TUCO INTERCHANGE - TUCO_2 230.00 230KV CKT 1	478	502	0.3613	108.3093	TUCO INTERCHANGE - TUCO_2 345.00 345KV CKT 1
FDNS	06ALL	4	15WP	ASGI_15_02	FROM->TO	TUCO INTERCHANGE - TUCO_2 230.00 230KV CKT 1	557	557	0.36778	107.3541	TUCO INTERCHANGE - TUCO_2 345.00 345KV CKT 1
FDNS	06ALL	4	20WP	ASGI_15_02	FROM->TO	TUCO INTERCHANGE - TUCO_2 230.00 230KV CKT 1	557	557	0.35967	99.6	TUCO INTERCHANGE - TUCO_2 345.00 345KV CKT 1
FDNS	06ALL	4	15G	ASGI_15_02	FROM->TO	TUCO_2 345.00 (TUCO_2 XFMR) 345/230/13.2KV TRANSFORMER CKT 1	560	560	0.27507	127.7356	TUCO INTERCHANGE - TUCO_2 345.00 345KV CKT 1
FDNS	06ALL	4	15G	ASGI_15_02	FROM->TO	TUCO_2 345.00 (TUCO_2 XFMR) 345/230/13.2KV TRANSFORMER CKT 1	560	560	0.27507	126.397	TUCO INTERCHANGE - TUCO_2 345.00 345KV CKT 1
FDNS	06ALL	4	15SP	ASGI_15_02	FROM->TO	TUCO_2 345.00 (TUCO_2 XFMR) 345/230/13.2KV TRANSFORMER CKT 1	560	560	0.28077	114.1941	TUCO INTERCHANGE - TUCO_2 345.00 345KV CKT 1
FDNS	06ALL	4	15SP	ASGI_15_02	FROM->TO	TUCO_2 345.00 (TUCO_2 XFMR) 345/230/13.2KV TRANSFORMER CKT 1	560	560	0.28077	113.3239	TUCO INTERCHANGE - TUCO_2 345.00 345KV CKT 1
FDNS	06ALL	4	15WP	ASGI_15_02	FROM->TO	TUCO_2 345.00 (TUCO_2 XFMR) 345/230/13.2KV TRANSFORMER CKT 1	560	560	0.28638	108.1334	TUCO INTERCHANGE - TUCO_2 345.00 345KV CKT 1
FDNS	06ALL	4	15WP	ASGI_15_02	FROM->TO	TUCO_2 345.00 (TUCO_2 XFMR) 345/230/13.2KV TRANSFORMER CKT 1	560	560	0.28638	107.4733	TUCO INTERCHANGE - TUCO_2 345.00 345KV CKT 1
FDNS	06ALL	4	20WP	ASGI_15_02	FROM->TO	TUCO_2 345.00 (TUCO_2 XFMR) 345/230/13.2KV TRANSFORMER CKT 1	560	560	0.27821	102.8738	TUCO INTERCHANGE - TUCO_2 345.00 345KV CKT 1
FDNS	06ALL	4	20WP	ASGI_15_02	FROM->TO	TUCO_2 345.00 (TUCO_2 XFMR) 345/230/13.2KV TRANSFORMER CKT 1	560	560	0.27821	102.4022	TUCO INTERCHANGE - TUCO_2 345.00 345KV CKT 1
FDNS	06ALL	5	15SP	ASGI_15_02	FROM->TO	CHISHOLM6 230.00 - ELK CITY 230KV 230KV CKT 1	353	353	0.06599	100.9761	BASE CASE
FDNS	06ALL	5	15SP	ASGI_15_02	FROM->TO	ELK CITY 230KV (ELKCTY-6) 230/138/13.8KV TRANSFORMER CKT 1	272	316	0.06599	129.9064	BASE CASE
FDNS	06ALL	5	15SP	ASGI_15_02	FROM->TO	ELK CITY 230KV (ELKCTY-6) 230/138/13.8KV TRANSFORMER CKT 1	272	316	0.06599	128.6412	BASE CASE
FDNS	06ALL	5	15G	ASGI_15_02	FROM->TO	ELK CITY 230KV (ELKCTY-6) 230/138/13.8KV TRANSFORMER CKT 1	287	316	0.06178	116.3419	BASE CASE
FDNS	06ALL	5	15G	ASGI_15_02	FROM->TO	ELK CITY 230KV (ELKCTY-6) 230/138/13.8KV TRANSFORMER CKT 1	287	316	0.06178	115.4406	BASE CASE
FDNS	06ALL	5	15WP	ASGI_15_02	FROM->TO	ELK CITY 230KV (ELKCTY-6) 230/138/13.8KV TRANSFORMER CKT 1	287	316	0.06792	112.0665	BASE CASE
FDNS	06ALL	5	15WP	ASGI_15_02	FROM->TO	ELK CITY 230KV (ELKCTY-6) 230/138/13.8KV TRANSFORMER CKT 1	287	316	0.06792	111.0777	BASE CASE
FDNS	06ALL	5	20SP	ASGI_15_02	FROM->TO	ELK CITY 230KV (ELKCTY-6) 230/138/13.8KV TRANSFORMER CKT 1	272	316	0.06607	107.1735	BASE CASE
FDNS	06ALL	5	20SP	ASGI_15_02	FROM->TO	ELK CITY 230KV (ELKCTY-6) 230/138/13.8KV TRANSFORMER CKT 1	272	316	0.06607	106.9225	BASE CASE
FDNS	06ALL	5	20WP	ASGI_15_02	FROM->TO	ELK CITY 230KV (ELKCTY-6) 230/138/13.8KV TRANSFORMER CKT 1	287	316	0.06537	106.7889	BASE CASE
FDNS	06ALL	5	20WP	ASGI_15_02	FROM->TO	ELK CITY 230KV (ELKCTY-6) 230/138/13.8KV TRANSFORMER CKT 1	287	316	0.06537	106.1215	BASE CASE
FDNSLock-Blown up	06ALL	0	15G	ASGI_15_03		Non-Converged Contingency	0	0	0.35942	-	SPP-SWPS-T59
FDNSLock-Blown up	06ALL	0	15G	ASGI_15_03		Non-Converged Contingency	0	0	0.33496	-	SPSCONT-02X

SOLUTION	GROUP	SCENARIO	SEASON	SOURCE	DIRECTION	MONITORED ELEMENT	RATEA (MVA)	RATEB(MVA)	TDF	TC%LOADING (% MVA)	CONTINGENCY
FDNSLock-Blown up	06ALL	0	15G	ASGI_15_03		Non-Converged Contingency	478	502	0.23099	-	TOLK STATION EAST - TUCO INTERCHANGE 230KV CKT 1
FDNSLock-Blown up	06ALL	0	15G	ASGI_15_03		Non-Converged Contingency	0	0	0.19526	-	SPSCONT-05AX
FDNSLock-Blown up	06ALL	0	15G	ASGI_15_03		Non-Converged Contingency	478	502	0.19486	-	NEWHART 230 - PLANT X STATION 230KV CKT 1
FDNSLock-Blown up	06ALL	0	15G	ASGI_15_03		Non-Converged Contingency	956	994	0.18249	-	G14-074T 345.00 - OKLAUNION 345KV CKT 1
FDNSLock-Blown up	06ALL	0	15G	ASGI_15_03		Non-Converged Contingency	956	994	0.18249	-	G14-074T 345.00 - TUCO INTERCHANGE 345KV CKT 1
FDNSLock-Blown up	06ALL	0	15G	ASGI_15_03		Non-Converged Contingency	956	994	0.18249	-	OKLAUNION 345KV SWITCHED SHUNT
FDNSLock-Blown up	06ALL	0	15G	ASGI_15_03		Non-Converged Contingency	319	351	0.17817	-	BUSHLAND INTERCHANGE - DEAF SMITH COUNTY INTERCHANGE 230KV CKT 1
FDNSLock-Blown up	06ALL	0	15G	ASGI_15_03		Non-Converged Contingency	319	351	0.17817	-	BUSHLAND INTERCHANGE 230KV SWITCHED SHUNT
FDNSLock-Blown up	06ALL	0	15G	ASGI_15_03		Non-Converged Contingency	956	1052	0.16748	-	G14_038T 345.00 - Hitchland Interchange 345KV CKT 1
FDNSLock-Blown up	06ALL	0	15G	ASGI_15_03		Non-Converged Contingency	956	1052	0.16748	-	G14_038T 345.00 - POTTER COUNTY INTERCHANGE 345KV CKT 1
FDNSLock-Blown up	06ALL	0	15G	ASGI_15_03		Non-Converged Contingency	560	560	0.16748	-	POTTER COUNTY INTERCHANGE (WAUK 90343-A) 345/230/13.2KV TRANSFORMER CKT 1
FDNSLock-Blown up	06ALL	0	15G	ASGI_15_03		Non-Converged Contingency	560	560	0.16729	-	TUCO INTERCHANGE (GE M1022338) 345/230/13.2KV TRANSFORMER CKT 1
FDNSLock-Blown up	06ALL	0	15G	ASGI_15_03		Non-Converged Contingency	1195	1195	0.1671	-	GRACEMONT - MINCO 345KV CKT 1
FDNSLock-Blown up	06ALL	0	15G	ASGI_15_03		Non-Converged Contingency	319	351	0.15616	-	BUSHLAND INTERCHANGE - POTTER COUNTY INTERCHANGE 230KV CKT 1
FDNSLock-Blown up	06ALL	0	15G	ASGI_15_03		Non-Converged Contingency	1330	1940	0.15212	-	CHISHOLM7 345.00 - GRACEMONT 345KV CKT 1
FDNSLock-Blown up	06ALL	0	15G	ASGI_15_03		Non-Converged Contingency	560	560	0.15012	-	TUCO_2 345.00 (TUCO_2 XFMR) 345/230/13.2KV TRANSFORMER CKT 1
FDNSLock-Blown up	06ALL	0	15G	ASGI_15_03		Non-Converged Contingency	560	644	0.14579	-	TUCO INTERCHANGE (SIEM 8743066) 345/230/13.2KV TRANSFORMER CKT 2
FDNSLock-Blown up	06ALL	0	15G	ASGI_15_03		Non-Converged Contingency	1792	1792	0.14039	-	CHISHOLM7 345.00 - WOODWARD DISTRICT EHV 345KV CKT 1
FDNSLock-Blown up	06ALL	0	15G	ASGI_15_03		Non-Converged Contingency	1792	1792	0.14036	-	BORDER 7345.00 - CHISHOLM7 345.00 345KV CKT 1
FDNSLock-Blown up	06ALL	0	15G	ASGI_15_03		Non-Converged Contingency	1792	1792	0.14036	-	BORDER 7345.00 - CHISHOLM7 345.00 345KV CKT 2
FDNSLock-Blown up	06ALL	0	15G	ASGI_15_03		Non-Converged Contingency	1420	1775	0.14036	-	BORDER 7345.00 - TUCO_2 345.00 345KV CKT 1
FDNSLock-Blown up	06ALL	0	15G	ASGI_15_03		Non-Converged Contingency	1420	1775	0.14036	-	BORDER 7345.00 - TUCO_2 345.00 345KV CKT 2
FDNSLock-Blown up	06ALL	0	15G	ASGI_15_03		Non-Converged Contingency	0	0	0.14025	-	SPP-SWPS-02
FDNSLock-Blown up	06ALL	0	15G	ASGI_15_03		Non-Converged Contingency	0	0	0.13189	-	SPP-SWPS-03
FDNSLock-Blown up	06ALL	0	15G	ASGI_15_03		Non-Converged Contingency	1420	1775	0.13059	-	TUCO INTERCHANGE - TUCO_2 345.00 345KV CKT 1
FDNSLock-Blown up	06ALL	0	15G	ASGI_15_03		Non-Converged Contingency	956	1052	0.12766	-	FINNEY SWITCHING STATION - Hitchland Interchange 345KV CKT 1
FDNSLock-Blown up	06ALL	0	15G	ASGI_15_03		Non-Converged Contingency	956	1052	0.12766	-	FINNEY SWITCHING STATION - HOLCOMB 345KV CKT 1
FDNSLock-Blown up	06ALL	0	15G	ASGI_15_03		Non-Converged Contingency	0	0	0.12766	-	SPP-SWPS-05
FDNSLock-Blown up	06ALL	0	15G	ASGI_15_03		Non-Converged Contingency	478	478	0.12733	-	DEAF SMITH COUNTY INTERCHANGE - G14-068T 230.00 230KV CKT 1
FDNSLock-Blown up	06ALL	0	15G	ASGI_15_03		Non-Converged Contingency	478	478	0.12733	-	G14-068T 230.00 - PLANT X STATION 230KV CKT 1
FDNSLock-Blown up	06ALL	0	15G	ASGI_15_03		Non-Converged Contingency	319	351	0.12612	-	SUNDOWN INTERCHANGE - WOLFFORTH INTERCHANGE 230KV CKT 1
FDNSLock-Blown up	06ALL	0	15G	ASGI_15_03		Non-Converged Contingency	319	351	0.12086	-	LUBBOCK SOUTH INTERCHANGE - WOLFFORTH INTERCHANGE 230KV CKT 1
FDNSLock-Blown up	06ALL	0	15G	ASGI_15_03		Non-Converged Contingency	478	502	0.11232	-	NEWHART 230 - POTTER COUNTY INTERCHANGE 230KV CKT 1
FDNSLock-Blown up	06ALL	0	15G	ASGI_15_03		Non-Converged Contingency	478	502	0.10138	-	TUCO INTERCHANGE - TUCO_2 230.00 230KV CKT 1
FDNSLock-Blown up	06ALL	0	15G	ASGI_15_03		Non-Converged Contingency	1420	1775	0.09763	-	G11_051T 345.00 - TATONGA7 345.00 345KV CKT 1
FDNSLock-Blown up	06ALL	0	15G	ASGI_15_03		Non-Converged Contingency	1420	1775	0.09763	-	G11_051T 345.00 - WOODWARD DISTRICT EHV 345KV CKT 1
FDNSLock-Blown up	06ALL	0	15G	ASGI_15_03		Non-Converged Contingency	1195	1195	0.09763	-	NORTHWEST - TATONGA7 345.00 345KV CKT 1
FDNSLock-Blown up	06ALL	0	15G	ASGI_15_03		Non-Converged Contingency	0	0	0.09763	-	SPSCONT-04
FDNSLock-Blown up	06ALL	0	15G	ASGI_15_03		Non-Converged Contingency	0	0	0.09763	-	SPSCONT-05B
FDNSLock-Blown up	06ALL	0	15G	ASGI_15_03		Non-Converged Contingency	96	96	0.08985	-	CARGILL SUB - DEAF SMITH REC-#24 115KV CKT 1
FDNSLock-Blown up	06ALL	0	15G	ASGI_15_03		Non-Converged Contingency	96	96	0.08985	-	CURRY COUNTY INTERCHANGE - DEAF SMITH REC-#20 115KV CKT 1
FDNSLock-Blown up	06ALL	0	15G	ASGI_15_03		Non-Converged Contingency	96	96	0.08985	-	DEAF SMITH REC-#20 - PARMER COUNTY SUB 115KV CKT 1
FDNSLock-Blown up	06ALL	0	15G	ASGI_15_03		Non-Converged Contingency	96	96	0.08985	-	DEAF SMITH REC-#24 - PARMER COUNTY SUB 115KV CKT 1
FDNSLock-Blown up	06ALL	0	15G	ASGI_15_03		Non-Converged Contingency	1420	1775	0.08503	-	G11-14T 345.00 - WOODWARD DISTRICT EHV 345KV CKT 1
FDNSLock-Blown up	06ALL	0	15G	ASGI_15_03		Non-Converged Contingency	1420	1775	0.08503	-	G11-14T 345.00 - WOODWARD DISTRICT EHV 345KV CKT 2
FDNSLock-Blown up	06ALL	0	15G	ASGI_15_03		Non-Converged Contingency	0	0	0.08337	-	SPP-SWPS-06
FDNSLock-Blown up	06ALL	0	15G	ASGI_15_03		Non-Converged Contingency	478	502	0.07963	-	JONES STATION - TUCO INTERCHANGE 230KV CKT 1
FDNSLock-Blown up	06ALL	0	15G	ASGI_15_03		Non-Converged Contingency	276	304	0.0774	-	BAILEY COUNTY INTERCHANGE - G15-018T 115.00 115KV CKT 1
FDNSLock-Blown up	06ALL	0	15G	ASGI_15_03		Non-Converged Contingency	0	0	0.0774	-	SPP-SWPS-V12
FDNSLock-Blown up	06ALL	0	15G	ASGI_15_03		Non-Converged Contingency	319	351	0.07602	-	AMARILLO SOUTH INTERCHANGE - SWISHER COUNTY INTERCHANGE 230KV CKT 1
FDNSLock-Blown up	06ALL	0	15G	ASGI_15_03		Non-Converged Contingency	478	502	0.07028	-	HITCHLAND INTERCHANGE - MOORE COUNTY INTERCHANGE 230KV CKT 1
FDNSLock-Blown up	06ALL	0	15G	ASGI_15_03		Non-Converged Contingency	478	502	0.07028	-	HITCHLAND INTERCHANGE - MOORE COUNTY INTERCHANGE 230KV CKT 1
FDNSLock-Blown up	06ALL	0	15G	ASGI_15_03		Non-Converged Contingency	439	439	0.07013	-	CHISHOLM6 230.00 - SWEETWATER 230KV CKT 1
FDNSLock-Blown up	06ALL	0	15G	ASGI_15_03		Non-Converged Contingency	319	351	0.07013	-	GRAPEVINE INTERCHANGE - STATELINE INTERCHANGE 230KV CKT 1
FDNSLock-Blown up	06ALL	0	15G	ASGI_15_03		Non-Converged Contingency	349	395	0.07013	-	STATELINE INTERCHANGE - STLN-DEMARC6 230KV CKT 1
FDNSLock-Blown up	06ALL	0	15G	ASGI_15_03		Non-Converged Contingency	396	441	0.07013	-	STLN-DEMARC6 - SWEETWATER 230KV CKT 1
FDNSLock-Blown up	06ALL	0	15G	ASGI_15_03		Non-Converged Contingency	319	351	0.06177	-	GRAPEVINE INTERCHANGE - NICHOLS STATION 230KV CKT 1
FDNSLock-Blown up	06ALL	0	15G	ASGI_15_03		Non-Converged Contingency	319	351	0.06176	-	MOORE COUNTY INTERCHANGE - POTTER COUNTY INTERCHANGE 230KV CKT 1
FDNSLock-Blown up	06ALL	0	15G	ASGI_15_03		Non-Converged Contingency	319	351	0.06176	-	MOORE COUNTY INTERCHANGE - POTTER COUNTY INTERCHANGE 230KV CKT 1
FDNSLock-Blown up	06ALL	0	15G	ASGI_15_03		Non-Converged Contingency	1413	1517	0.06014	-	BUCKNER7 345.00 - SPEARVILLE 345KV CKT 1
FDNSLock-Blown up	06ALL	0	15G	ASGI_15_03		Non-Converged Contingency	439	439	0.05833	-	CHISHOLM6 230.00 - ELK CITY 230KV 230KV CKT 1
FDNSLock-Blown up	06ALL	0	15G	ASGI_15_03		Non-Converged Contingency	287	316	0.05833	-	ELK CITY 230KV (ELKCTY-6) 230/138/13.8KV TRANSFORMER CKT 1
FDNSLock-Blown up	06ALL	0	15G	ASGI_15_03		Non-Converged Contingency	218	239	0.04535	-	WOLFFORTH INTERCHANGE - YUMA INTERCHANGE 115KV CKT 1
FDNSLock-Blown up	06ALL	0	15G	ASGI_15_03		Non-Converged Contingency	319	351	0.03896	-	AMOCO SWITCHING STATION - SUNDOWN INTERCHANGE 230KV CKT 1
FDNSLock-Blown up	06ALL	0	15G	ASGI_15_03		Non-Converged Contingency	319	351	0.03896	-	AMOCO SWITCHING STATION - YOAKUM COUNTY INTERCHANGE 230KV CKT 1
FDNSLock-Blown up	06ALL	0	15G	ASGI_15_03		Non-Converged Contingency	319	351	0.034	-	CARLISLE INTERCHANGE - TUCO INTERCHANGE 230KV CKT 1
FDNSLock-Blown up	06ALL	0	15SP	ASGI_15_03		Non-Converged Contingency	0	0	0.34735	-	SPSCONT-02X
FDNSLock-Blown up	06ALL	0	15SP	ASGI_15_03		Non-Converged Contingency	956	994	0.1887	-	G14-074T 345.00 - OKLAUNION 345KV CKT 1
FDNSLock-Blown up	06ALL	0	15SP	ASGI_15_03		Non-Converged Contingency	956	994	0.1887	-	G14-074T 345.00 - TUCO INTERCHANGE 345KV CKT 1
FDNSLock-Blown up	06ALL	0	15SP	ASGI_15_03		Non-Converged Contingency	956	1052	0.17368	-	G14_038T 345.00 - Hitchland Interchange 345KV CKT 1
FDNSLock-Blown up	06ALL	0	15SP	ASGI_15_03		Non-Converged Contingency	1420	1775	0.14431	-	BORDER 7345.00 - TUCO_2 345.00 345KV CKT 1
FDNSLock-Blown up	06ALL	0	15SP	ASGI_15_03		Non-Converged Contingency	1420	1775	0.14431	-	BORDER 7345.00 - TUCO_2 345.00 345KV CKT 2
FDNSLock-Blown up	06ALL	0	15SP	ASGI_15_03		Non-Converged Contingency	478	478	0.12824	-	G14-068T 230.00 - PLANT X STATION 230KV CKT 1
FDNSLock-Blown up	06ALL	0	15WP	ASGI_15_03		Non-Converged Contingency	1033	1071	0.19378	-	G14-074T 345.00 - OKLAUNION 345KV CKT 1
FDNSLock-Blown up	06ALL	0	20SP	ASGI_15_03		Non-Converged Contingency	956	994	0.24892	-	G14-074T 345.00 - OKLAUNION 345KV CKT 1

SOLUTION	GROUP	SCENARIO	SEASON	SOURCE	DIRECTION	MONITORED ELEMENT	RATEA (MVA)	RATEB(MVA)	TDF	TC%LOADING (% MVA)	CONTINGENCY
FDNSLock-Blown up	06ALL	0	20WP	ASGI_15_03		Non-Converged Contingency	0	0	0.34616	-	SPSCONT-02X
FDNSLock-Blown up	06ALL	0	20WP	ASGI_15_03		Non-Converged Contingency	1033	1071	0.24592	-	G14-074T 345.00 - OKLAUNION 345KV CKT 1
FDNSLock-Blown up	06ALL	0	20WP	ASGI_15_03		Non-Converged Contingency	1033	1071	0.24592	-	G14-074T 345.00 - TUCO INTERCHANGE 345KV CKT 1
FDNSLock-Blown up	06ALL	0	20WP	ASGI_15_03		Non-Converged Contingency	1420	1775	0.18522	-	BORDER 7345.00 - TUCO_2 345.00 345KV CKT 1
FDNSLock-Blown up	06ALL	0	20WP	ASGI_15_03		Non-Converged Contingency	1792	1792	0.18522	-	BORDER 7345.00 - WOODWARD DISTRICT EHV 345KV CKT 1
FDNSLock-Blown up	06ALL	0	20WP	ASGI_15_03		Non-Converged Contingency	956	1052	0.17308	-	G14_038T 345.00 - Hitchland Interchange 345KV CKT 1
FDNSLock-Blown up	06ALL	2	15G	ASGI_15_03		Non-Converged Contingency	0	0	0.32134	-	SPSCONT-02X
FDNSLock-Blown up	06ALL	2	15G	ASGI_15_03		Non-Converged Contingency	956	994	0.19062	-	G14-074T 345.00 - OKLAUNION 345KV CKT 1
FDNSLock-Blown up	06ALL	2	15G	ASGI_15_03		Non-Converged Contingency	956	994	0.19062	-	G14-074T 345.00 - TUCO INTERCHANGE 345KV CKT 1
FDNSLock-Blown up	06ALL	2	15G	ASGI_15_03		Non-Converged Contingency	956	1052	0.16067	-	G14_038T 345.00 - Hitchland Interchange 345KV CKT 1
FDNSLock-Blown up	06ALL	2	15G	ASGI_15_03		Non-Converged Contingency	956	1052	0.16067	-	G14_038T 345.00 - POTTER COUNTY INTERCHANGE 345KV CKT 1
FDNSLock-Blown up	06ALL	2	15G	ASGI_15_03		Non-Converged Contingency	560	560	0.16067	-	POTTER COUNTY INTERCHANGE (WAUK 90343-A) 345/230/13.2KV TRANSFORMER CKT 1
FDNSLock-Blown up	06ALL	2	15G	ASGI_15_03		Non-Converged Contingency	1420	1775	0.14843	-	BORDER 7345.00 - TUCO_2 345.00 345KV CKT 1
FDNSLock-Blown up	06ALL	2	15G	ASGI_15_03		Non-Converged Contingency	1420	1775	0.14843	-	BORDER 7345.00 - TUCO_2 345.00 345KV CKT 2
FDNSLock-Blown up	06ALL	2	15SP	ASGI_15_03		Non-Converged Contingency	956	994	0.19632	-	G14-074T 345.00 - OKLAUNION 345KV CKT 1
FDNSLock-Blown up	06ALL	2	15WP	ASGI_15_03		Non-Converged Contingency	1033	1071	0.20142	-	G14-074T 345.00 - OKLAUNION 345KV CKT 1
FDNSLock-Blown up	06ALL	3	15G	ASGI_15_03		Non-Converged Contingency	0	0	0.49553	-	SPSCONT-02X
FDNSLock-Blown up	06ALL	3	15G	ASGI_15_03		Non-Converged Contingency	956	1052	0.24776	-	G14_038T 345.00 - Hitchland Interchange 345KV CKT 1
FDNSLock-Blown up	06ALL	3	15G	ASGI_15_03		Non-Converged Contingency	956	1052	0.24776	-	G14_038T 345.00 - POTTER COUNTY INTERCHANGE 345KV CKT 1
FDNSLock-Blown up	06ALL	3	15G	ASGI_15_03		Non-Converged Contingency	956	994	0.16166	-	G14-074T 345.00 - OKLAUNION 345KV CKT 1
FDNS	06ALL	0	15G	ASGI_15_03	TO->FROM	AMOCO SWITCHING STATION - YOAKUM COUNTY INTERCHANGE 230KV CKT 1	319	351	0.03896	104.8902	BASE CASE
FDNS	06ALL	0	15G	ASGI_15_03	TO->FROM	BUSHLAND INTERCHANGE - DEAF SMITH COUNTY INTERCHANGE 230KV CKT 1	319	351	0.1999	100.9522	DEAF SMITH COUNTY INTERCHANGE - Panda Energy Substation Hereford 115KV CKT 1
FDNS	06ALL	0	15G	ASGI_15_03	TO->FROM	BUSHLAND INTERCHANGE - DEAF SMITH COUNTY INTERCHANGE 230KV CKT 1	319	351	0.1999	100.594	DAWN SUB - Panda Energy Substation Hereford 115KV CKT 1
FDNS	06ALL	0	15G	ASGI_15_03	TO->FROM	BUSHLAND INTERCHANGE - DEAF SMITH COUNTY INTERCHANGE 230KV CKT 1	319	351	0.1999	100	CANYON WEST SUB - DAWN SUB 115KV CKT 1
FDNS	06ALL	0	15G	ASGI_15_03	TO->FROM	BUSHLAND INTERCHANGE - DEAF SMITH COUNTY INTERCHANGE 230KV CKT 1	319	351	0.1999	99.5	SPP-SWPS-W40
FDNS	06ALL	0	15G	ASGI_15_03	TO->FROM	CARGILL SUB - DEAF SMITH REC-#24 115KV CKT 1	96	96	0.08985	105.5446	BASE CASE
FDNS	06ALL	0	15SP	ASGI_15_03	TO->FROM	CARGILL SUB - DEAF SMITH REC-#24 115KV CKT 1	96	96	0.09008	101.5046	BASE CASE
FDNS	06ALL	0	15SP	ASGI_15_03	FROM->TO	CURRY COUNTY INTERCHANGE - DEAF SMITH REC-#20 115KV CKT 1	96	96	0.09008	134.4755	BASE CASE
FDNS	06ALL	0	15G	ASGI_15_03	FROM->TO	CURRY COUNTY INTERCHANGE - DEAF SMITH REC-#20 115KV CKT 1	96	96	0.08985	128.1788	BASE CASE
FDNS	06ALL	0	20SP	ASGI_15_03	FROM->TO	CURRY COUNTY INTERCHANGE - DEAF SMITH REC-#20 115KV CKT 1	96	96	0.08848	125.174	BASE CASE
FDNS	06ALL	0	25SP	ASGI_15_03	FROM->TO	CURRY COUNTY INTERCHANGE - DEAF SMITH REC-#20 115KV CKT 1	96	96	0.08866	117.7445	BASE CASE
FDNS	06ALL	0	15SP	ASGI_15_03	FROM->TO	DEAF SMITH REC-#20 - PARMER COUNTY SUB 115KV CKT 1	96	96	0.09008	121.3248	BASE CASE
FDNS	06ALL	0	15G	ASGI_15_03	FROM->TO	DEAF SMITH REC-#20 - PARMER COUNTY SUB 115KV CKT 1	96	96	0.08985	119.1935	BASE CASE
FDNS	06ALL	0	20SP	ASGI_15_03	FROM->TO	DEAF SMITH REC-#20 - PARMER COUNTY SUB 115KV CKT 1	96	96	0.08848	109.5934	BASE CASE
FDNS	06ALL	0	15G	ASGI_15_03	TO->FROM	DEAF SMITH REC-#24 - PARMER COUNTY SUB 115KV CKT 1	96	96	0.08985	113.7704	BASE CASE
FDNS	06ALL	0	15SP	ASGI_15_03	TO->FROM	DEAF SMITH REC-#24 - PARMER COUNTY SUB 115KV CKT 1	96	96	0.09008	113.2753	BASE CASE
FDNS	06ALL	0	20SP	ASGI_15_03	TO->FROM	DEAF SMITH REC-#24 - PARMER COUNTY SUB 115KV CKT 1	96	96	0.08848	101.2457	BASE CASE
FDNS	06ALL	0	15SP	ASGI_15_03	FROM->TO	ELK CITY 230KV (ELKCTY-6) 230/138/13.8KV TRANSFORMER CKT 1	272	316	0.06342	125.7575	BASE CASE
FDNS	06ALL	0	15SP	ASGI_15_03	FROM->TO	ELK CITY 230KV (ELKCTY-6) 230/138/13.8KV TRANSFORMER CKT 1	272	316	0.06342	124.0328	BASE CASE
FDNS	06ALL	0	15G	ASGI_15_03	FROM->TO	ELK CITY 230KV (ELKCTY-6) 230/138/13.8KV TRANSFORMER CKT 1	287	316	0.05833	112.017	BASE CASE
FDNS	06ALL	0	15G	ASGI_15_03	FROM->TO	ELK CITY 230KV (ELKCTY-6) 230/138/13.8KV TRANSFORMER CKT 1	287	316	0.05833	110.2834	BASE CASE
FDNS	06ALL	0	15WP	ASGI_15_03	FROM->TO	ELK CITY 230KV (ELKCTY-6) 230/138/13.8KV TRANSFORMER CKT 1	287	316	0.06524	107.7723	BASE CASE
FDNS	06ALL	0	15WP	ASGI_15_03	FROM->TO	ELK CITY 230KV (ELKCTY-6) 230/138/13.8KV TRANSFORMER CKT 1	287	316	0.06524	106.4302	BASE CASE
FDNS	06ALL	0	20WP	ASGI_15_03	TO->FROM	GRAPEVINE INTERCHANGE - NICHOLS STATION 230KV CKT 1	329	361	0.08763	121.1428	BASE CASE
FDNS	06ALL	0	15G	ASGI_15_03	TO->FROM	GRAPEVINE INTERCHANGE - NICHOLS STATION 230KV CKT 1	319	351	0.06177	105.2692	BASE CASE
FDNS	06ALL	0	20SP	ASGI_15_03	TO->FROM	GRAPEVINE INTERCHANGE - NICHOLS STATION 230KV CKT 1	319	351	0.0895	99.5	BASE CASE
FDNS	06ALL	0	15SP	ASGI_15_03	TO->FROM	NEWHART 230 - PLANT X STATION 230KV CKT 1	478	502	0.23687	131.4399	DEAF SMITH COUNTY INTERCHANGE - G14-068T 230.00 230KV CKT 1
FDNS	06ALL	0	15SP	ASGI_15_03	TO->FROM	NEWHART 230 - PLANT X STATION 230KV CKT 1	478	502	0.25999	125.803	TOLK STATION EAST - TUCO INTERCHANGE 230KV CKT 1
FDNS	06ALL	0	15SP	ASGI_15_03	TO->FROM	NEWHART 230 - PLANT X STATION 230KV CKT 1	478	502	0.24201	112.8584	BUSHLAND INTERCHANGE - DEAF SMITH COUNTY INTERCHANGE 230KV CKT 1
FDNS	06ALL	0	15SP	ASGI_15_03	TO->FROM	NEWHART 230 - PLANT X STATION 230KV CKT 1	478	502	0.21724	105.469	SUNDOWN INTERCHANGE - WOLFFORTH INTERCHANGE 230KV CKT 1
FDNS	06ALL	0	15SP	ASGI_15_03	TO->FROM	NEWHART 230 - PLANT X STATION 230KV CKT 1	478	502	0.20185	104.6456	PLANT X STATION (WH ALM20171) 230/115/13.2KV TRANSFORMER CKT 1
FDNS	06ALL	0	15SP	ASGI_15_03	TO->FROM	NEWHART 230 - PLANT X STATION 230KV CKT 1	478	502	0.2191	102.0972	BUSHLAND INTERCHANGE - POTTER COUNTY INTERCHANGE 230KV CKT 1
FDNS	06ALL	0	15SP	ASGI_15_03	TO->FROM	NEWHART 230 - PLANT X STATION 230KV CKT 1	478	502	0.21196	101.3263	LUBBOCK SOUTH INTERCHANGE - WOLFFORTH INTERCHANGE 230KV CKT 1
FDNS	06ALL	0	20SP	ASGI_15_03	TO->FROM	NEWHART 230 - PLANT X STATION 230KV CKT 1	478	502	0.22132	100	DEAF SMITH COUNTY INTERCHANGE - G14-068T 230.00 230KV CKT 1
FDNS	06ALL	0	20SP	ASGI_15_03	TO->FROM	NEWHART 230 - PLANT X STATION 230KV CKT 1	478	502	0.22132	100	G14-068T 230.00 - PLANT X STATION 230KV CKT 1
FDNS	06ALL	0	15SP	ASGI_15_03	TO->FROM	PLANT X STATION - TOLK STATION EAST 230KV CKT 2	478	502	0.20209	101.1924	PLANT X STATION - TOLK STATION WEST 230KV CKT 1
FDNS	06ALL	0	15SP	ASGI_15_03	TO->FROM	PLANT X STATION - TOLK STATION EAST 230KV CKT 2	478	502	0.20209	101.1924	PLANT X STATION - TOLK STATION WEST 230KV CKT 2
FDNS	06ALL	0	15SP	ASGI_15_03	TO->FROM	PLANT X STATION - TOLK STATION WEST 230KV CKT 1	478	502	0.21166	105.4413	PLANT X STATION - TOLK STATION WEST 230KV CKT 2
FDNS	06ALL	0	15SP	ASGI_15_03	TO->FROM	PLANT X STATION - TOLK STATION WEST 230KV CKT 1	478	502	0.20726	103.5304	PLANT X STATION - TOLK STATION EAST 230KV CKT 2
FDNS	06ALL	0	15SP	ASGI_15_03	TO->FROM	PLANT X STATION - TOLK STATION WEST 230KV CKT 1	478	502	0.20241	100.6793	TOLK STATION EAST - TUCO INTERCHANGE 230KV CKT 1
FDNS	06ALL	0	15SP	ASGI_15_03	TO->FROM	PLANT X STATION - TOLK STATION WEST 230KV CKT 2	478	502	0.21166	105.4413	PLANT X STATION - TOLK STATION WEST 230KV CKT 1
FDNS	06ALL	0	15SP	ASGI_15_03	TO->FROM	PLANT X STATION - TOLK STATION WEST 230KV CKT 2	478	502	0.20726	103.5304	PLANT X STATION - TOLK STATION EAST 230KV CKT 2
FDNS	06ALL	0	15SP	ASGI_15_03	TO->FROM	PLANT X STATION - TOLK STATION WEST 230KV CKT 2	478	502	0.20241	100.6793	TOLK STATION EAST - TUCO INTERCHANGE 230KV CKT 1
FDNS	06ALL	0	15G	ASGI_15_03	FROM->TO	TERRY COUNTY INTERCHANGE - WOLFFORTH INTERCHANGE 115KV CKT 1	120	154	0.04008	108.5207	BASE CASE
FDNS	06ALL	0	15SP	ASGI_15_03	FROM->TO	TOLK STATION EAST - TUCO INTERCHANGE 230KV CKT 1	478	502	0.28098	117.9185	NEWHART 230 - PLANT X STATION 230KV CKT 1
FDNS	06ALL	0	15SP	ASGI_15_03	FROM->TO	TOLK STATION EAST - TUCO INTERCHANGE 230KV CKT 1	478	502	0.25538	110.5721	DEAF SMITH COUNTY INTERCHANGE - G14-068T 230.00 230KV CKT 1
FDNS	06ALL	0	15SP	ASGI_15_03	FROM->TO	TOLK STATION EAST - TUCO INTERCHANGE 230KV CKT 1	478	502	0.27061	108.8842	SUNDOWN INTERCHANGE - WOLFFORTH INTERCHANGE 230KV CKT 1
FDNS	06ALL	0	15SP	ASGI_15_03	FROM->TO	TOLK STATION EAST - TUCO INTERCHANGE 230KV CKT 1	478	502	0.26249	102.2896	LUBBOCK SOUTH INTERCHANGE - WOLFFORTH INTERCHANGE 230KV CKT 1
FDNS	06ALL	0	15SP	ASGI_15_03	FROM->TO	TOLK STATION EAST - TUCO INTERCHANGE 230KV CKT 1	478	502	0.26401	102.1725	BUSHLAND INTERCHANGE - DEAF SMITH COUNTY INTERCHANGE 230KV CKT 1
FDNS	06ALL	0	15SP	ASGI_15_03	FROM->TO	TUCO INTERCHANGE - TUCO_2 230.00 230KV CKT 1	478	502	0.21599	171.3069	TUCO INTERCHANGE - TUCO_2 345.00 345KV CKT 1
FDNS	06ALL	0	15WP	ASGI_15_03	FROM->TO	TUCO INTERCHANGE - TUCO_2 230.00 230KV CKT 1	557	557	0.22258	134.3573	TUCO INTERCHANGE - TUCO_2 345.00 345KV CKT 1
FDNS	06ALL	0	15WP	ASGI_15_03	FROM->TO	TUCO INTERCHANGE (GE M1022338) 345/230/13.2KV TRANSFORMER CKT 1	560	560	0.25944	123.6189	TUCO INTERCHANGE (SIEM 8743066) 345/230/13.2KV TRANSFORMER CKT 2
FDNS	06ALL	0	15WP	ASGI_15_03	FROM->TO	TUCO INTERCHANGE (GE M1022338) 345/230/13.2KV TRANSFORMER CKT 1	560	560	0.25944	121.7966	TUCO INTERCHANGE (SIEM 8743066) 345/230/13.2KV TRANSFORMER CKT 2
FDNS	06ALL	0	15WP	ASGI_15_03	FROM->TO	TUCO INTERCHANGE (GE M1022338) 345/230/13.2KV TRANSFORMER CKT 1	560	560	0.25553	120.4848	TUCO_2 345.00 (TUCO_2 XFMR) 345/230/13.2KV TRANSFORMER CKT 1
FDNS	06ALL	0	15WP	ASGI_15_03	FROM->TO	TUCO INTERCHANGE (GE M1022338) 345/230/13.2KV TRANSFORMER CKT 1	560	560	0.25553	118.8811	TUCO_2 345.00 (TUCO_2 XFMR) 345/230/13.2KV TRANSFORMER CKT 1

SOLUTION	GROUP	SCENARIO	SEASON	SOURCE	DIRECTION	MONITORED ELEMENT	RATEA (MVA)	RATEB(MVA)	TDF	TC%LOADING (% MVA)	CONTINGENCY
FDNS	06ALL	0	15SP	ASGI_15_03	FROM->TO	TUCO INTERCHANGE (GE M1022338) 345/230/13.2KV TRANSFORMER CKT 1	560	560	0.25268	113.3311	TUCO INTERCHANGE (SIEM 8743066) 345/230/13.2KV TRANSFORMER CKT 2
FDNS	06ALL	0	15WP	ASGI_15_03	FROM->TO	TUCO INTERCHANGE (GE M1022338) 345/230/13.2KV TRANSFORMER CKT 1	560	560	0.22519	112.9697	TUCO INTERCHANGE - TUCO_2 230.00 230KV CKT 1
FDNS	06ALL	0	15WP	ASGI_15_03	FROM->TO	TUCO INTERCHANGE (GE M1022338) 345/230/13.2KV TRANSFORMER CKT 1	560	560	0.22519	111.3776	TUCO INTERCHANGE - TUCO_2 230.00 230KV CKT 1
FDNS	06ALL	0	15SP	ASGI_15_03	FROM->TO	TUCO INTERCHANGE (GE M1022338) 345/230/13.2KV TRANSFORMER CKT 1	560	560	0.25268	111.3719	TUCO INTERCHANGE (SIEM 8743066) 345/230/13.2KV TRANSFORMER CKT 2
FDNS	06ALL	0	15SP	ASGI_15_03	FROM->TO	TUCO INTERCHANGE (GE M1022338) 345/230/13.2KV TRANSFORMER CKT 1	560	560	0.24898	110.0342	TUCO_2 345.00 (TUCO_2 XFMR) 345/230/13.2KV TRANSFORMER CKT 1
FDNS	06ALL	0	15SP	ASGI_15_03	FROM->TO	TUCO INTERCHANGE (GE M1022338) 345/230/13.2KV TRANSFORMER CKT 1	560	560	0.24898	108.332	TUCO_2 345.00 (TUCO_2 XFMR) 345/230/13.2KV TRANSFORMER CKT 1
FDNS	06ALL	0	15SP	ASGI_15_03	FROM->TO	TUCO INTERCHANGE (GE M1022338) 345/230/13.2KV TRANSFORMER CKT 1	560	560	0.21896	107.9073	TUCO INTERCHANGE - TUCO_2 230.00 230KV CKT 1
FDNS	06ALL	0	15SP	ASGI_15_03	FROM->TO	TUCO INTERCHANGE (GE M1022338) 345/230/13.2KV TRANSFORMER CKT 1	560	560	0.21896	105.9346	TUCO INTERCHANGE - TUCO_2 230.00 230KV CKT 1
FDNS	06ALL	0	15SP	ASGI_15_03	FROM->TO	TUCO_2 345.00 (TUCO_2 XFMR) 345/230/13.2KV TRANSFORMER CKT 1	560	560	0.26649	145.8188	TUCO INTERCHANGE - TUCO_2 345.00 345KV CKT 1
FDNS	06ALL	0	15SP	ASGI_15_03	FROM->TO	TUCO_2 345.00 (TUCO_2 XFMR) 345/230/13.2KV TRANSFORMER CKT 1	560	560	0.26649	142.7342	TUCO INTERCHANGE - TUCO_2 345.00 345KV CKT 1
FDNS	06ALL	0	15WP	ASGI_15_03	FROM->TO	TUCO_2 345.00 (TUCO_2 XFMR) 345/230/13.2KV TRANSFORMER CKT 1	560	560	0.27337	138.8622	TUCO INTERCHANGE - TUCO_2 345.00 345KV CKT 1
FDNS	06ALL	0	15WP	ASGI_15_03	FROM->TO	TUCO_2 345.00 (TUCO_2 XFMR) 345/230/13.2KV TRANSFORMER CKT 1	560	560	0.27337	136.3817	TUCO INTERCHANGE - TUCO_2 345.00 345KV CKT 1
FDNS	06ALL	0	15WP	ASGI_15_03	FROM->TO	TUCO_2 345.00 (TUCO_2 XFMR) 345/230/13.2KV TRANSFORMER CKT 1	560	560	0.23655	109.7547	TUCO INTERCHANGE (GE M1022338) 345/230/13.2KV TRANSFORMER CKT 1
FDNS	06ALL	0	15WP	ASGI_15_03	FROM->TO	TUCO_2 345.00 (TUCO_2 XFMR) 345/230/13.2KV TRANSFORMER CKT 1	560	560	0.23655	108.6761	TUCO INTERCHANGE (GE M1022338) 345/230/13.2KV TRANSFORMER CKT 1
FDNS	06ALL	0	15WP	ASGI_15_03	FROM->TO	TUCO_2 345.00 (TUCO_2 XFMR) 345/230/13.2KV TRANSFORMER CKT 1	560	560	0.22186	102.7663	TUCO INTERCHANGE (SIEM 8743066) 345/230/13.2KV TRANSFORMER CKT 2
FDNS	06ALL	0	15WP	ASGI_15_03	FROM->TO	TUCO_2 345.00 (TUCO_2 XFMR) 345/230/13.2KV TRANSFORMER CKT 1	560	560	0.22186	101.7947	TUCO INTERCHANGE (SIEM 8743066) 345/230/13.2KV TRANSFORMER CKT 2
FDNS	06ALL	0	15SP	ASGI_15_03	FROM->TO	TUCO_2 345.00 (TUCO_2 XFMR) 345/230/13.2KV TRANSFORMER CKT 1	560	560	0.23059	99.6	TUCO INTERCHANGE (GE M1022338) 345/230/13.2KV TRANSFORMER CKT 1
FDNS	06ALL	2	15SP	ASGI_15_03	FROM->TO	CURRY COUNTY INTERCHANGE - DEAF SMITH REC-#20 115KV CKT 1	96	96	0.08708	123.9455	BASE CASE
FDNS	06ALL	2	20SP	ASGI_15_03	FROM->TO	CURRY COUNTY INTERCHANGE - DEAF SMITH REC-#20 115KV CKT 1	96	96	0.08604	116.2962	BASE CASE
FDNS	06ALL	2	25SP	ASGI_15_03	FROM->TO	CURRY COUNTY INTERCHANGE - DEAF SMITH REC-#20 115KV CKT 1	96	96	0.08622	112.3574	BASE CASE
FDNS	06ALL	2	15G	ASGI_15_03	FROM->TO	CURRY COUNTY INTERCHANGE - DEAF SMITH REC-#20 115KV CKT 1	96	96	0.08708	107.9018	BASE CASE
FDNS	06ALL	2	15SP	ASGI_15_03	FROM->TO	DEAF SMITH REC-#20 - PARMER COUNTY SUB 115KV CKT 1	96	96	0.08708	111.0308	BASE CASE
FDNS	06ALL	2	20SP	ASGI_15_03	FROM->TO	DEAF SMITH REC-#20 - PARMER COUNTY SUB 115KV CKT 1	96	96	0.08604	100.9761	BASE CASE
FDNS	06ALL	2	15SP	ASGI_15_03	TO->FROM	DEAF SMITH REC-#24 - PARMER COUNTY SUB 115KV CKT 1	96	96	0.08708	102.83	BASE CASE
FDNS	06ALL	2	15SP	ASGI_15_03	FROM->TO	ELK CITY 230KV (ELKCTY-6) 230/138/13.8KV TRANSFORMER CKT 1	272	316	0.06349	125.7818	BASE CASE
FDNS	06ALL	2	15SP	ASGI_15_03	FROM->TO	ELK CITY 230KV (ELKCTY-6) 230/138/13.8KV TRANSFORMER CKT 1	272	316	0.06349	124.4125	BASE CASE
FDNS	06ALL	2	15G	ASGI_15_03	FROM->TO	ELK CITY 230KV (ELKCTY-6) 230/138/13.8KV TRANSFORMER CKT 1	287	316	0.05887	111.2694	BASE CASE
FDNS	06ALL	2	15G	ASGI_15_03	FROM->TO	ELK CITY 230KV (ELKCTY-6) 230/138/13.8KV TRANSFORMER CKT 1	287	316	0.05887	110.3238	BASE CASE
FDNS	06ALL	2	15WP	ASGI_15_03	FROM->TO	ELK CITY 230KV (ELKCTY-6) 230/138/13.8KV TRANSFORMER CKT 1	287	316	0.06526	107.6385	BASE CASE
FDNS	06ALL	2	15WP	ASGI_15_03	FROM->TO	ELK CITY 230KV (ELKCTY-6) 230/138/13.8KV TRANSFORMER CKT 1	287	316	0.06526	106.6339	BASE CASE
FDNS	06ALL	2	20SP	ASGI_15_03	FROM->TO	ELK CITY 230KV (ELKCTY-6) 230/138/13.8KV TRANSFORMER CKT 1	272	316	0.0636	103.949	BASE CASE
FDNS	06ALL	2	20SP	ASGI_15_03	FROM->TO	ELK CITY 230KV (ELKCTY-6) 230/138/13.8KV TRANSFORMER CKT 1	272	316	0.0636	103.7414	BASE CASE
FDNS	06ALL	2	20WP	ASGI_15_03	FROM->TO	ELK CITY 230KV (ELKCTY-6) 230/138/13.8KV TRANSFORMER CKT 1	287	316	0.06285	101.967	BASE CASE
FDNS	06ALL	2	20WP	ASGI_15_03	FROM->TO	ELK CITY 230KV (ELKCTY-6) 230/138/13.8KV TRANSFORMER CKT 1	287	316	0.06285	101.2457	BASE CASE
FDNS	06ALL	2	15SP	ASGI_15_03	TO->FROM	NEWHART 230 - PLANT X STATION 230KV CKT 1	478	502	0.20839	105.0168	DEAF SMITH COUNTY INTERCHANGE - G14-068T 230.00 230KV CKT 1
FDNS	06ALL	2	15SP	ASGI_15_03	TO->FROM	NEWHART 230 - PLANT X STATION 230KV CKT 1	478	502	0.20839	105.011	G14-068T 230.00 - PLANT X STATION 230KV CKT 1
FDNS	06ALL	2	15G	ASGI_15_03	FROM->TO	TUCO INTERCHANGE - TUCO_2 230.00 230KV CKT 1	478	502	0.23556	200.4231	TUCO INTERCHANGE - TUCO_2 345.00 345KV CKT 1
FDNS	06ALL	2	15SP	ASGI_15_03	FROM->TO	TUCO INTERCHANGE - TUCO_2 230.00 230KV CKT 1	478	502	0.24219	183.8625	TUCO INTERCHANGE - TUCO_2 345.00 345KV CKT 1
FDNS	06ALL	2	15WP	ASGI_15_03	FROM->TO	TUCO INTERCHANGE - TUCO_2 230.00 230KV CKT 1	557	557	0.24926	142.2485	TUCO INTERCHANGE - TUCO_2 345.00 345KV CKT 1
FDNS	06ALL	2	20SP	ASGI_15_03	FROM->TO	TUCO INTERCHANGE - TUCO_2 230.00 230KV CKT 1	478	502	0.24637	137.8459	TUCO INTERCHANGE - TUCO_2 345.00 345KV CKT 1
FDNS	06ALL	2	15G	ASGI_15_03	FROM->TO	TUCO_2 345.00 (TUCO_2 XFMR) 345/230/13.2KV TRANSFORMER CKT 1	560	560	0.26579	167.6169	TUCO INTERCHANGE - TUCO_2 345.00 345KV CKT 1
FDNS	06ALL	2	15G	ASGI_15_03	FROM->TO	TUCO_2 345.00 (TUCO_2 XFMR) 345/230/13.2KV TRANSFORMER CKT 1	560	560	0.26579	164.2629	TUCO INTERCHANGE - TUCO_2 345.00 345KV CKT 1
FDNS	06ALL	2	15SP	ASGI_15_03	FROM->TO	TUCO_2 345.00 (TUCO_2 XFMR) 345/230/13.2KV TRANSFORMER CKT 1	560	560	0.27266	149.8147	TUCO INTERCHANGE - TUCO_2 345.00 345KV CKT 1
FDNS	06ALL	2	15SP	ASGI_15_03	FROM->TO	TUCO_2 345.00 (TUCO_2 XFMR) 345/230/13.2KV TRANSFORMER CKT 1	560	560	0.27266	147.216	TUCO INTERCHANGE - TUCO_2 345.00 345KV CKT 1
FDNS	06ALL	2	15WP	ASGI_15_03	FROM->TO	TUCO_2 345.00 (TUCO_2 XFMR) 345/230/13.2KV TRANSFORMER CKT 1	560	560	0.27935	141.8557	TUCO INTERCHANGE - TUCO_2 345.00 345KV CKT 1
FDNS	06ALL	2	15WP	ASGI_15_03	FROM->TO	TUCO_2 345.00 (TUCO_2 XFMR) 345/230/13.2KV TRANSFORMER CKT 1	560	560	0.27935	139.9334	TUCO INTERCHANGE - TUCO_2 345.00 345KV CKT 1
FDNS	06ALL	2	20SP	ASGI_15_03	FROM->TO	TUCO_2 345.00 (TUCO_2 XFMR) 345/230/13.2KV TRANSFORMER CKT 1	560	560	0.27376	112.3827	TUCO INTERCHANGE - TUCO_2 345.00 345KV CKT 1
FDNS	06ALL	2	20SP	ASGI_15_03	FROM->TO	TUCO_2 345.00 (TUCO_2 XFMR) 345/230/13.2KV TRANSFORMER CKT 1	560	560	0.27376	112.1069	TUCO INTERCHANGE - TUCO_2 345.00 345KV CKT 1
FDNS	06ALL	3	15SP	ASGI_15_03	FROM->TO	ELK CITY 230KV (ELKCTY-6) 230/138/13.8KV TRANSFORMER CKT 1	272	316	0.06058	123.9727	BASE CASE
FDNS	06ALL	3	15SP	ASGI_15_03	FROM->TO	ELK CITY 230KV (ELKCTY-6) 230/138/13.8KV TRANSFORMER CKT 1	272	316	0.06058	122.7526	BASE CASE
FDNS	06ALL	3	15G	ASGI_15_03	FROM->TO	ELK CITY 230KV (ELKCTY-6) 230/138/13.8KV TRANSFORMER CKT 1	287	316	0.05595	109.3338	BASE CASE
FDNS	06ALL	3	15G	ASGI_15_03	FROM->TO	ELK CITY 230KV (ELKCTY-6) 230/138/13.8KV TRANSFORMER CKT 1	287	316	0.05595	108.4212	BASE CASE
FDNS	06ALL	3	15WP	ASGI_15_03	FROM->TO	ELK CITY 230KV (ELKCTY-6) 230/138/13.8KV TRANSFORMER CKT 1	287	316	0.06234	106.1239	BASE CASE
FDNS	06ALL	3	15WP	ASGI_15_03	FROM->TO	ELK CITY 230KV (ELKCTY-6) 230/138/13.8KV TRANSFORMER CKT 1	287	316	0.06234	105.1628	BASE CASE
FDNS	06ALL	3	20SP	ASGI_15_03	FROM->TO	ELK CITY 230KV (ELKCTY-6) 230/138/13.8KV TRANSFORMER CKT 1	272	316	0.06057	102.7547	BASE CASE
FDNS	06ALL	3	20SP	ASGI_15_03	FROM->TO	ELK CITY 230KV (ELKCTY-6) 230/138/13.8KV TRANSFORMER CKT 1	272	316	0.06057	102.5743	BASE CASE
FDNS	06ALL	3	20WP	ASGI_15_03	FROM->TO	ELK CITY 230KV (ELKCTY-6) 230/138/13.8KV TRANSFORMER CKT 1	287	316	0.05987	100.8598	BASE CASE
FDNS	06ALL	3	20WP	ASGI_15_03	FROM->TO	ELK CITY 230KV (ELKCTY-6) 230/138/13.8KV TRANSFORMER CKT 1	287	316	0.05987	100.2492	BASE CASE
FDNS	06ALL	3	15G	ASGI_15_03	TO->FROM	GRAPEVINE INTERCHANGE - NICHOLS STATION 230KV CKT 1	319	351	0.06695	100.925	BASE CASE
FDNS	06ALL	3	15G	ASGI_15_03	FROM->TO	TUCO_2 345.00 (TUCO_2 XFMR) 345/230/13.2KV TRANSFORMER CKT 1	560	560	0.21187	151.8506	TUCO INTERCHANGE - TUCO_2 345.00 345KV CKT 1
FDNS	06ALL	3	15G	ASGI_15_03	FROM->TO	TUCO_2 345.00 (TUCO_2 XFMR) 345/230/13.2KV TRANSFORMER CKT 1	560	560	0.21187	149.0893	TUCO INTERCHANGE - TUCO_2 345.00 345KV CKT 1
FDNS	06ALL	3	15SP	ASGI_15_03	FROM->TO	TUCO_2 345.00 (TUCO_2 XFMR) 345/230/13.2KV TRANSFORMER CKT 1	560	560	0.21787	133.4173	TUCO INTERCHANGE - TUCO_2 345.00 345KV CKT 1
FDNS	06ALL	3	15SP	ASGI_15_03	FROM->TO	TUCO_2 345.00 (TUCO_2 XFMR) 345/230/13.2KV TRANSFORMER CKT 1	560	560	0.21787	131.8248	TUCO INTERCHANGE - TUCO_2 345.00 345KV CKT 1
FDNS	06ALL	3	15WP	ASGI_15_03	FROM->TO	TUCO_2 345.00 (TUCO_2 XFMR) 345/230/13.2KV TRANSFORMER CKT 1	560	560	0.22406	127.9846	TUCO INTERCHANGE - TUCO_2 345.00 345KV CKT 1
FDNS	06ALL	3	15WP	ASGI_15_03	FROM->TO	TUCO_2 345.00 (TUCO_2 XFMR) 345/230/13.2KV TRANSFORMER CKT 1	560	560	0.22406	126.6738	TUCO INTERCHANGE - TUCO_2 345.00 345KV CKT 1
FDNS	06ALL	3	20WP	ASGI_15_03	FROM->TO	TUCO_2 345.00 (TUCO_2 XFMR) 345/230/13.2KV TRANSFORMER CKT 1	560	560	0.21598	121.9391	TUCO INTERCHANGE - TUCO_2 345.00 345KV CKT 1
FDNS	06ALL	3	20WP	ASGI_15_03	FROM->TO	TUCO_2 345.00 (TUCO_2 XFMR) 345/230/13.2KV TRANSFORMER CKT 1	560	560	0.21598	121.0095	TUCO INTERCHANGE - TUCO_2 345.00 345KV CKT 1
FDNS	06ALL	3	20SP	ASGI_15_03	FROM->TO	TUCO_2 345.00 (TUCO_2 XFMR) 345/230/13.2KV TRANSFORMER CKT 1	560	560	0.21872	100.2304	TUCO INTERCHANGE - TUCO_2 345.00 345KV CKT 1
FDNS	06ALL	3	20SP	ASGI_15_03	FROM->TO	TUCO_2 345.00 (TUCO_2 XFMR) 345/230/13.2KV TRANSFORMER CKT 1	560	560	0.21872	100.1212	TUCO INTERCHANGE - TUCO_2 345.00 345KV CKT 1
FDNS	06ALL	4	15SP	ASGI_15_03	FROM->TO	CHISHOLM6 230.00 - ELK CITY 230KV 230KV CKT 1	353	353	0.06719	100.9254	BASE CASE
FDNS	06ALL	4	15SP	ASGI_15_03	FROM->TO	ELK CITY 230KV (ELKCTY-6) 230/138/13.8KV TRANSFORMER CKT 1	272	316	0.06719	129.8441	BASE CASE
FDNS	06ALL	4	15SP	ASGI_15_03	FROM->TO	ELK CITY 230KV (ELKCTY-6) 230/138/13.8KV TRANSFORMER CKT 1	272	316	0.06719	128.5805	BASE CASE
FDNS	06ALL	4	15G	ASGI_15_03	FROM->TO	ELK CITY 230KV (ELKCTY-6) 230/138/13.8KV TRANSFORMER CKT 1	287	316	0.0628	116.3182	BASE CASE
FDNS	06ALL	4	15G	ASGI_15_03	FROM->TO	ELK CITY 230KV (ELKCTY-6) 230/138/13.8KV TRANSFORMER CKT 1	287	316	0.0628	115.4161	BASE CASE
FDNS	06ALL	4	15WP	ASGI_15_03	FROM->TO	ELK CITY 230KV (ELKCTY-6) 230/138/13.8KV TRANSFORMER CKT 1	287	316	0.06911	112.0283	BASE CASE

SOLUTION	GROUP	SCENARIO	SEASON	SOURCE	DIRECTION	MONITORED ELEMENT	RATEA (MVA)	RATEB(MVA)	TDF	TC%LOADING (% MVA)	CONTINGENCY
FDNS	06ALL	4	15WP	ASGI_15_03	FROM->TO	ELK CITY 230KV (ELKCTY-6) 230/138/13.8KV TRANSFORMER CKT 1	287	316	0.06911	111.0401	BASE CASE
FDNS	06ALL	4	20SP	ASGI_15_03	FROM->TO	ELK CITY 230KV (ELKCTY-6) 230/138/13.8KV TRANSFORMER CKT 1	272	316	0.06717	107.1637	BASE CASE
FDNS	06ALL	4	20SP	ASGI_15_03	FROM->TO	ELK CITY 230KV (ELKCTY-6) 230/138/13.8KV TRANSFORMER CKT 1	272	316	0.06717	106.9127	BASE CASE
FDNS	06ALL	4	20WP	ASGI_15_03	FROM->TO	ELK CITY 230KV (ELKCTY-6) 230/138/13.8KV TRANSFORMER CKT 1	287	316	0.06646	106.7868	BASE CASE
FDNS	06ALL	4	20WP	ASGI_15_03	FROM->TO	ELK CITY 230KV (ELKCTY-6) 230/138/13.8KV TRANSFORMER CKT 1	287	316	0.06646	106.1189	BASE CASE
FDNS	06ALL	4	15G	ASGI_15_03	FROM->TO	POTTER COUNTY INTERCHANGE (WAUK 90343-A) 345/230/13.2KV TRANSFORMER CKT 1	560	560	0.20032	111.314	PLSNT_HILL7 345.00 - POTTER COUNTY INTERCHANGE 345KV CKT 1
FDNS	06ALL	4	15G	ASGI_15_03	FROM->TO	POTTER COUNTY INTERCHANGE (WAUK 90343-A) 345/230/13.2KV TRANSFORMER CKT 1	560	560	0.20032	111.0141	PLSNT_HILL7 345.00 - POTTER COUNTY INTERCHANGE 345KV CKT 1
FDNS	06ALL	5	15SP	ASGI_15_03	FROM->TO	CHISHOLM6 230.00 - ELK CITY 230KV 230KV CKT 1	353	353	0.06725	100.9761	BASE CASE
FDNS	06ALL	5	15SP	ASGI_15_03	FROM->TO	ELK CITY 230KV (ELKCTY-6) 230/138/13.8KV TRANSFORMER CKT 1	272	316	0.06725	129.9064	BASE CASE
FDNS	06ALL	5	15SP	ASGI_15_03	FROM->TO	ELK CITY 230KV (ELKCTY-6) 230/138/13.8KV TRANSFORMER CKT 1	272	316	0.06725	128.6412	BASE CASE
FDNS	06ALL	5	15G	ASGI_15_03	FROM->TO	ELK CITY 230KV (ELKCTY-6) 230/138/13.8KV TRANSFORMER CKT 1	287	316	0.06286	116.3419	BASE CASE
FDNS	06ALL	5	15G	ASGI_15_03	FROM->TO	ELK CITY 230KV (ELKCTY-6) 230/138/13.8KV TRANSFORMER CKT 1	287	316	0.06286	115.4406	BASE CASE
FDNS	06ALL	5	15WP	ASGI_15_03	FROM->TO	ELK CITY 230KV (ELKCTY-6) 230/138/13.8KV TRANSFORMER CKT 1	287	316	0.06917	112.0665	BASE CASE
FDNS	06ALL	5	15WP	ASGI_15_03	FROM->TO	ELK CITY 230KV (ELKCTY-6) 230/138/13.8KV TRANSFORMER CKT 1	287	316	0.06917	111.0777	BASE CASE
FDNS	06ALL	5	20SP	ASGI_15_03	FROM->TO	ELK CITY 230KV (ELKCTY-6) 230/138/13.8KV TRANSFORMER CKT 1	272	316	0.06722	107.1735	BASE CASE
FDNS	06ALL	5	20SP	ASGI_15_03	FROM->TO	ELK CITY 230KV (ELKCTY-6) 230/138/13.8KV TRANSFORMER CKT 1	272	316	0.06722	106.9225	BASE CASE
FDNS	06ALL	5	20WP	ASGI_15_03	FROM->TO	ELK CITY 230KV (ELKCTY-6) 230/138/13.8KV TRANSFORMER CKT 1	287	316	0.06652	106.7889	BASE CASE
FDNS	06ALL	5	20WP	ASGI_15_03	FROM->TO	ELK CITY 230KV (ELKCTY-6) 230/138/13.8KV TRANSFORMER CKT 1	287	316	0.06652	106.1215	BASE CASE
FDNS	06ALL	5	15G	ASGI_15_03	FROM->TO	POTTER COUNTY INTERCHANGE (WAUK 90343-A) 345/230/13.2KV TRANSFORMER CKT 1	560	560	0.20024	111.2115	PLSNT_HILL7 345.00 - POTTER COUNTY INTERCHANGE 345KV CKT 1
FDNS	06ALL	5	15G	ASGI_15_03	FROM->TO	POTTER COUNTY INTERCHANGE (WAUK 90343-A) 345/230/13.2KV TRANSFORMER CKT 1	560	560	0.20024	110.9126	PLSNT_HILL7 345.00 - POTTER COUNTY INTERCHANGE 345KV CKT 1
FDNS	04ALL	0	25SP	G10_048	TO->FROM	BEACH STATION - G10-48T 115.00 115KV CKT 1	80	88	0.41103	107.1480	MINGO (MINGO) 345/115/13.8KV TRANSFORMER CKT 1
FDNS	04ALL	0	20SP	G10_048	TO->FROM	BEACH STATION - G10-48T 115.00 115KV CKT 1	80	88	0.41103	101.6866	MINGO (MINGO) 345/115/13.8KV TRANSFORMER CKT 1
FDNSLock-Blown up	09ALL	0	15G	G14_023		Non-Converged Contingency	720	720	0.08136	-	GRAND ISLAND - HOLT.CO3 345.00 345KV CKT 1
FDNSLock-Blown up	09ALL	0	15SP	G14_023		Non-Converged Contingency	720	720	0.08131	-	GRAND ISLAND - HOLT.CO3 345.00 345KV CKT 1
FDNSLock-Blown up	09ALL	0	15WP	G14_023		Non-Converged Contingency	720	720	0.0804	-	GRAND ISLAND - HOLT.CO3 345.00 345KV CKT 1
FDNSLock-Blown up	09ALL	2	15G	G14_023		Non-Converged Contingency	720	720	0.08125	-	GRAND ISLAND - HOLT.CO3 345.00 345KV CKT 1
FDNSLock-Blown up	09ALL	2	15SP	G14_023		Non-Converged Contingency	720	720	0.08187	-	GRAND ISLAND - HOLT.CO3 345.00 345KV CKT 1
FDNSLock-Blown up	09ALL	2	15WP	G14_023		Non-Converged Contingency	720	720	0.08059	-	GRAND ISLAND - HOLT.CO3 345.00 345KV CKT 1
FDNS	09ALL	0	15G	G14_023	TO->FROM	FT RANDAL - G14_023T 230.00 230KV CKT 1	320	320	1	123.6343	KELLY - MEADOWGROVE4230.00 230KV CKT 1
FDNS	09ALL	0	15SP	G14_023	TO->FROM	FT RANDAL - G14_023T 230.00 230KV CKT 1	320	320	1	122.8962	KELLY - MEADOWGROVE4230.00 230KV CKT 1
FDNS	09ALL	0	25SP	G14_023	TO->FROM	FT RANDAL - G14_023T 230.00 230KV CKT 1	320	320	1	122.7810	KELLY - MEADOWGROVE4230.00 230KV CKT 1
FDNS	09ALL	0	20WP	G14_023	TO->FROM	FT RANDAL - G14_023T 230.00 230KV CKT 1	320	320	1	122.7258	KELLY - MEADOWGROVE4230.00 230KV CKT 1
FDNS	09ALL	0	15WP	G14_023	TO->FROM	FT RANDAL - G14_023T 230.00 230KV CKT 1	320	320	1	122.7181	KELLY - MEADOWGROVE4230.00 230KV CKT 1
FDNS	09ALL	0	20SP	G14_023	TO->FROM	FT RANDAL - G14_023T 230.00 230KV CKT 1	320	320	1	122.6494	KELLY - MEADOWGROVE4230.00 230KV CKT 1
FDNS	09NR	0	15G	G14_023	TO->FROM	FT RANDAL - G14_023T 230.00 230KV CKT 1	320	320	1	109.6911	KELLY - MEADOWGROVE4230.00 230KV CKT 1
FDNS	09NR	0	15G	G14_023	FROM->TO	G14-059T 230.00 - OGALLALA 230KV CKT 1	320	320	0.04256	125.8320	KEYSTONE - SIDNEY 345KV CKT 1
FDNS	00NR	0	15SP	G14_023	FROM->TO	G14-059T 230.00 - OGALLALA 230KV CKT 1	320	320	0.04129	124.5109	KEYSTONE - SIDNEY 345KV CKT 1
FDNS	00NR	0	25SP	G14_023	FROM->TO	G14-059T 230.00 - OGALLALA 230KV CKT 1	320	320	0.03532	116.3340	KEYSTONE - SIDNEY 345KV CKT 1
FDNS	00NR	0	15WP	G14_023	FROM->TO	G14-059T 230.00 - OGALLALA 230KV CKT 1	320	320	0.03926	115.6280	KEYSTONE - SIDNEY 345KV CKT 1
FDNS	00NR	0	20SP	G14_023	FROM->TO	G14-059T 230.00 - OGALLALA 230KV CKT 1	320	320	0.03601	115.3019	KEYSTONE - SIDNEY 345KV CKT 1
FDNS	00NR	0	20WP	G14_023	FROM->TO	G14-059T 230.00 - OGALLALA 230KV CKT 1	320	320	0.03448	112.8683	KEYSTONE - SIDNEY 345KV CKT 1
FDNS	09ALL	0	15G	G14_023	TO->FROM	KELLY - MEADOWGROVE4230.00 230KV CKT 1	368	368	1	110.6376	FT RANDAL - G14_023T 230.00 230KV CKT 1
FDNS	09ALL	0	20WP	G14_023	TO->FROM	KELLY - MEADOWGROVE4230.00 230KV CKT 1	368	368	1	109.0458	FT RANDAL - G14_023T 230.00 230KV CKT 1
FDNS	09ALL	0	15WP	G14_023	TO->FROM	KELLY - MEADOWGROVE4230.00 230KV CKT 1	368	368	1	108.8899	FT RANDAL - G14_023T 230.00 230KV CKT 1
FDNS	09ALL	0	25SP	G14_023	TO->FROM	KELLY - MEADOWGROVE4230.00 230KV CKT 1	368	368	1	108.7906	FT RANDAL - G14_023T 230.00 230KV CKT 1
FDNS	09ALL	0	15SP	G14_023	TO->FROM	KELLY - MEADOWGROVE4230.00 230KV CKT 1	368	368	1	108.4508	FT RANDAL - G14_023T 230.00 230KV CKT 1
FDNS	09ALL	0	20SP	G14_023	TO->FROM	KELLY - MEADOWGROVE4230.00 230KV CKT 1	368	368	1	108.3702	FT RANDAL - G14_023T 230.00 230KV CKT 1
FDNS	09ALL	2	15G	G14_023	TO->FROM	FT RANDAL - G14_023T 230.00 230KV CKT 1	320	320	1	123.2484	KELLY - MEADOWGROVE4230.00 230KV CKT 1
FDNS	09ALL	2	15SP	G14_023	TO->FROM	FT RANDAL - G14_023T 230.00 230KV CKT 1	320	320	1	122.8419	KELLY - MEADOWGROVE4230.00 230KV CKT 1
FDNS	09ALL	2	15WP	G14_023	TO->FROM	FT RANDAL - G14_023T 230.00 230KV CKT 1	320	320	1	122.6410	KELLY - MEADOWGROVE4230.00 230KV CKT 1
FDNS	09NR	2	15G	G14_023	TO->FROM	FT RANDAL - G14_023T 230.00 230KV CKT 1	320	320	1	109.6312	KELLY - MEADOWGROVE4230.00 230KV CKT 1
FDNS	09NR	2	15G	G14_023	FROM->TO	G14-059T 230.00 - OGALLALA 230KV CKT 1	320	320	0.04251	125.5977	KEYSTONE - SIDNEY 345KV CKT 1
FDNS	00NR	2	15SP	G14_023	FROM->TO	G14-059T 230.00 - OGALLALA 230KV CKT 1	320	320	0.04124	124.5047	KEYSTONE - SIDNEY 345KV CKT 1
FDNS	00NR	2	15WP	G14_023	FROM->TO	G14-059T 230.00 - OGALLALA 230KV CKT 1	320	320	0.0392	115.5316	KEYSTONE - SIDNEY 345KV CKT 1
FDNS	09ALL	2	15G	G14_023	TO->FROM	KELLY - MEADOWGROVE4230.00 230KV CKT 1	368	368	1	110.1577	FT RANDAL - G14_023T 230.00 230KV CKT 1
FDNS	09ALL	2	15SP	G14_023	TO->FROM	KELLY - MEADOWGROVE4230.00 230KV CKT 1	368	368	1	108.3764	FT RANDAL - G14_023T 230.00 230KV CKT 1
FDNS	09ALL	2	15WP	G14_023	TO->FROM	KELLY - MEADOWGROVE4230.00 230KV CKT 1	368	368	1	108.3556	FT RANDAL - G14_023T 230.00 230KV CKT 1
FDNS	09ALL	3	15G	G14_023	TO->FROM	FT RANDAL - G14_023T 230.00 230KV CKT 1	320	320	1	123.2375	KELLY - MEADOWGROVE4230.00 230KV CKT 1
FDNS	09ALL	3	15SP	G14_023	TO->FROM	FT RANDAL - G14_023T 230.00 230KV CKT 1	320	320	1	122.8292	KELLY - MEADOWGROVE4230.00 230KV CKT 1
FDNS	09ALL	3	15WP	G14_023	TO->FROM	FT RANDAL - G14_023T 230.00 230KV CKT 1	320	320	1	122.6376	KELLY - MEADOWGROVE4230.00 230KV CKT 1
FDNS	09NR	3	15G	G14_023	TO->FROM	FT RANDAL - G14_023T 230.00 230KV CKT 1	320	320	1	109.6286	KELLY - MEADOWGROVE4230.00 230KV CKT 1
FDNS	00NR	3	15SP	G14_023	FROM->TO	G14-059T 230.00 - OGALLALA 230KV CKT 1	320	320	0.03618	126.0617	KEYSTONE - SIDNEY 345KV CKT 1
FDNS	09NR	3	15G	G14_023	FROM->TO	G14-059T 230.00 - OGALLALA 230KV CKT 1	320	320	0.03716	125.5611	KEYSTONE - SIDNEY 345KV CKT 1
FDNSLock	00NR	3	15WP	G14_023	FROM->TO	G14-059T 230.00 - OGALLALA 230KV CKT 1	320	320	0.03442	119.7142	KEYSTONE - SIDNEY 345KV CKT 1
FDNS	09ALL	3	15G	G14_023	TO->FROM	KELLY - MEADOWGROVE4230.00 230KV CKT 1	368	368	1	110.0463	FT RANDAL - G14_023T 230.00 230KV CKT 1
FDNS	09ALL	3	15WP	G14_023	TO->FROM	KELLY - MEADOWGROVE4230.00 230KV CKT 1	368	368	1	108.3238	FT RANDAL - G14_023T 230.00 230KV CKT 1
FDNS	09ALL	3	15SP	G14_023	TO->FROM	KELLY - MEADOWGROVE4230.00 230KV CKT 1	368	368	1	108.2727	FT RANDAL - G14_023T 230.00 230KV CKT 1
FDNS	09ALL	4	15SP	G14_023	TO->FROM	ALBION - PETERSBURG 115KV CKT 1	137	137	0.04573	100.0000	BASE CASE
FDNS	00NR	4	15SP	G14_023	FROM->TO	G14-059T 230.00 - OGALLALA 230KV CKT 1	320	320	0.03564	125.8998	KEYSTONE - SIDNEY 345KV CKT 1
FDNS	09NR	4	15G	G14_023	FROM->TO	G14-059T 230.00 - OGALLALA 230KV CKT 1	320	320	0.03662	125.5394	KEYSTONE - SIDNEY 345KV CKT 1
FDNSLock	00NR	4	15WP	G14_023	FROM->TO	G14-059T 230.00 - OGALLALA 230KV CKT 1	320	320	0.03389	119.6486	KEYSTONE - SIDNEY 345KV CKT 1
FDNS	00NR	4	25SP	G14_023	FROM->TO	G14-059T 230.00 - OGALLALA 230KV CKT 1	320	320	0.0347	116.1383	KEYSTONE - SIDNEY 345KV CKT 1
FDNS	00NR	4	20SP	G14_023	FROM->TO	G14-059T 230.00 - OGALLALA 230KV CKT 1	320	320	0.03538	115.1176	KEYSTONE - SIDNEY 345KV CKT 1
FDNS	00NR	4	20WP	G14_023	FROM->TO	G14-059T 230.00 - OGALLALA 230KV CKT 1	320	320	0.03386	112.7372	KEYSTONE - SIDNEY 345KV CKT 1
FDNS	09ALL	4	15SP	G14_023	FROM->TO	PETERSBRG.N7115.00 - PETERSBURG 115KV CKT Z1	137	137	0.04573	103.5479	BASE CASE

SOLUTION	GROUP	SCENARIO	SEASON	SOURCE	DIRECTION	MONITORED ELEMENT	RATEA (MVA)	RATEB(MVA)	TDF	TC%LOADING (% MVA)	CONTINGENCY
FDNSLock-Blown up	02ALL	0	15G	G14_037		Non-Converged Contingency	0	0	0.37884	-	SPSCONT-05AX
FDNSLock-Blown up	02ALL	0	15G	G14_037		Non-Converged Contingency	1420	1775	0.26035	-	G11-14T 345.00 - WOODWARD DISTRICT EHV 345KV CKT 1
FDNSLock-Blown up	02ALL	0	15G	G14_037		Non-Converged Contingency	1420	1775	0.26035	-	G11-14T 345.00 - WOODWARD DISTRICT EHV 345KV CKT 2
FDNSLock-Blown up	02ALL	0	15G	G14_037		Non-Converged Contingency	956	1052	0.24304	-	FINNEY SWITCHING STATION - Hitchland Interchange 345KV CKT 1
FDNSLock-Blown up	02ALL	0	15G	G14_037		Non-Converged Contingency	956	1052	0.24304	-	FINNEY SWITCHING STATION - HOLCOMB 345KV CKT 1
FDNSLock-Blown up	02ALL	0	15G	G14_037		Non-Converged Contingency	0	0	0.24304	-	SPP-SWPS-05
FDNSLock-Blown up	02ALL	0	15G	G14_037		Non-Converged Contingency	1420	1775	0.18942	-	G11_051T 345.00 - TATONGA7 345.00 345KV CKT 1
FDNSLock-Blown up	02ALL	0	15G	G14_037		Non-Converged Contingency	1420	1775	0.18942	-	G11_051T 345.00 - WOODWARD DISTRICT EHV 345KV CKT 1
FDNSLock-Blown up	02ALL	0	15G	G14_037		Non-Converged Contingency	1195	1195	0.18942	-	NORTHWEST - TATONGA7 345.00 345KV CKT 1
FDNSLock-Blown up	02ALL	0	15G	G14_037		Non-Converged Contingency	0	0	0.18942	-	SPSCONT-04
FDNSLock-Blown up	02ALL	0	15G	G14_037		Non-Converged Contingency	0	0	0.18942	-	SPSCONT-05B
FDNSLock-Blown up	02ALL	0	15G	G14_037		Non-Converged Contingency	1413	1517	0.1326	-	BUCKNER7 345.00 - SPEARVILLE 345KV CKT 1
FDNSLock-Blown up	02ALL	0	15G	G14_037		Non-Converged Contingency	0	0	0.13089	-	SPP-SWPS-02A
FDNSLock-Blown up	02ALL	0	15G	G14_037		Non-Converged Contingency	956	1052	0.12893	-	G14_038T 345.00 - Hitchland Interchange 345KV CKT 1
FDNSLock-Blown up	02ALL	0	15G	G14_037		Non-Converged Contingency	956	1052	0.12893	-	G14_038T 345.00 - POTTER COUNTY INTERCHANGE 345KV CKT 1
FDNSLock-Blown up	02ALL	0	15G	G14_037		Non-Converged Contingency	560	560	0.12893	-	POTTER COUNTY INTERCHANGE (WAUK 90343-A) 345/230/13.2KV TRANSFORMER CKT 1
FDNSLock-Blown up	02ALL	0	15G	G14_037		Non-Converged Contingency	1561	1793	0.11072	-	THISTLE7 345.00 - WOODWARD DISTRICT EHV 345KV CKT 1
FDNSLock-Blown up	02ALL	0	15G	G14_037		Non-Converged Contingency	1561	1793	0.11072	-	THISTLE7 345.00 - WOODWARD DISTRICT EHV 345KV CKT 2
FDNSLock-Blown up	02ALL	0	15G	G14_037		Non-Converged Contingency	0	0	0.08726	-	SPP-SWPS-02
FDNSLock-Blown up	02ALL	0	15G	G14_037		Non-Converged Contingency	0	0	0.08196	-	SPP-SWPS-03
FDNSLock-Blown up	02ALL	0	15G	G14_037		Non-Converged Contingency	956	994	0.07198	-	G14-074T 345.00 - OKLAUNION 345KV CKT 1
FDNSLock-Blown up	02ALL	0	15G	G14_037		Non-Converged Contingency	956	994	0.07198	-	G14-074T 345.00 - TUCO INTERCHANGE 345KV CKT 1
FDNSLock-Blown up	02ALL	0	15G	G14_037		Non-Converged Contingency	439	439	0.04363	-	ELK CITY 230KV - SWEETWATER 230KV CKT 1
FDNSLock-Blown up	02ALL	0	15G	G14_037		Non-Converged Contingency	287	316	0.04363	-	ELK CITY 230KV (ELKCTY-6) 230/138/13.8KV TRANSFORMER CKT 1
FDNSLock-Blown up	02ALL	0	15G	G14_037		Non-Converged Contingency	319	351	0.04363	-	GRAPEVINE INTERCHANGE - STATELINE INTERCHANGE 230KV CKT 1
FDNSLock-Blown up	02ALL	0	15G	G14_037		Non-Converged Contingency	349	395	0.04363	-	STATELINE INTERCHANGE - STLN-DEMARC6 230KV CKT 1
FDNSLock-Blown up	02ALL	0	15G	G14_037		Non-Converged Contingency	396	441	0.04363	-	STLN-DEMARC6 - SWEETWATER 230KV CKT 1
FDNSLock-Blown up	02ALL	0	15SP	G14_037		Non-Converged Contingency	1420	1775	0.26393	-	G11-14T 345.00 - WOODWARD DISTRICT EHV 345KV CKT 1
FDNSLock-Blown up	02ALL	0	15SP	G14_037		Non-Converged Contingency	1420	1775	0.26393	-	G11-14T 345.00 - WOODWARD DISTRICT EHV 345KV CKT 2
FDNSLock-Blown up	02ALL	0	15SP	G14_037		Non-Converged Contingency	956	1052	0.24882	-	FINNEY SWITCHING STATION - Hitchland Interchange 345KV CKT 1
FDNSLock-Blown up	02ALL	0	15SP	G14_037		Non-Converged Contingency	956	1052	0.24882	-	FINNEY SWITCHING STATION - HOLCOMB 345KV CKT 1
FDNSLock-Blown up	02ALL	0	15SP	G14_037		Non-Converged Contingency	0	0	0.24882	-	SPP-SWPS-05
FDNSLock-Blown up	02ALL	0	15WP	G14_037		Non-Converged Contingency	1420	1775	0.26506	-	G11-14T 345.00 - WOODWARD DISTRICT EHV 345KV CKT 1
FDNSLock-Blown up	02ALL	0	15WP	G14_037		Non-Converged Contingency	1420	1775	0.26506	-	G11-14T 345.00 - WOODWARD DISTRICT EHV 345KV CKT 2
FDNSLock-Blown up	02ALL	0	15WP	G14_037		Non-Converged Contingency	987	1083	0.2491	-	FINNEY SWITCHING STATION - Hitchland Interchange 345KV CKT 1
FDNSLock-Blown up	02ALL	0	15WP	G14_037		Non-Converged Contingency	956	1052	0.2491	-	FINNEY SWITCHING STATION - HOLCOMB 345KV CKT 1
FDNSLock-Blown up	02ALL	0	15WP	G14_037		Non-Converged Contingency	0	0	0.2491	-	SPP-SWPS-05
FDNSLock-Blown up	02ALL	0	20SP	G14_037		Non-Converged Contingency	956	1052	0.2452	-	FINNEY SWITCHING STATION - HOLCOMB 345KV CKT 1
FDNSLock-Blown up	02ALL	0	20WP	G14_037		Non-Converged Contingency	1420	1775	0.25834	-	G11-14T 345.00 - WOODWARD DISTRICT EHV 345KV CKT 1
FDNSLock-Blown up	02ALL	0	20WP	G14_037		Non-Converged Contingency	1420	1775	0.25834	-	G11-14T 345.00 - WOODWARD DISTRICT EHV 345KV CKT 2
FDNSLock-Blown up	02ALL	0	20WP	G14_037		Non-Converged Contingency	987	1083	0.24287	-	FINNEY SWITCHING STATION - Hitchland Interchange 345KV CKT 1
FDNSLock-Blown up	02ALL	0	20WP	G14_037		Non-Converged Contingency	956	1052	0.24287	-	FINNEY SWITCHING STATION - HOLCOMB 345KV CKT 1
FDNSLock-Blown up	02ALL	0	20WP	G14_037		Non-Converged Contingency	0	0	0.24287	-	SPP-SWPS-05
FDNSLock-Blown up	02ALL	2	15G	G14_037		Non-Converged Contingency	0	0	0.37524	-	SPSCONT-05AX
FDNSLock-Blown up	02ALL	2	15G	G14_037		Non-Converged Contingency	956.09	1051.7	0.25642	-	Hitchland Interchange - WALKTAP7 345.00 345KV CKT 1
FDNSLock-Blown up	02ALL	2	15G	G14_037		Non-Converged Contingency	1420	1775	0.25526	-	G11-14T 345.00 - WOODWARD DISTRICT EHV 345KV CKT 1
FDNSLock-Blown up	02ALL	2	15G	G14_037		Non-Converged Contingency	1420	1775	0.25526	-	G11-14T 345.00 - WOODWARD DISTRICT EHV 345KV CKT 2
FDNSLock-Blown up	02ALL	2	15G	G14_037		Non-Converged Contingency	956	1052	0.21629	-	FINNEY SWITCHING STATION - HOLCOMB 345KV CKT 1
FDNSLock-Blown up	02ALL	2	15G	G14_037		Non-Converged Contingency	956.09	1051.7	0.21629	-	FINNEY SWITCHING STATION - WALKTAP7 345.00 345KV CKT 1
FDNSLock-Blown up	02ALL	2	15G	G14_037		Non-Converged Contingency	1420	1775	0.18762	-	G11_051T 345.00 - TATONGA7 345.00 345KV CKT 1
FDNSLock-Blown up	02ALL	2	15G	G14_037		Non-Converged Contingency	1420	1775	0.18762	-	G11_051T 345.00 - WOODWARD DISTRICT EHV 345KV CKT 1
FDNSLock-Blown up	02ALL	2	15G	G14_037		Non-Converged Contingency	1195	1195	0.18762	-	NORTHWEST - TATONGA7 345.00 345KV CKT 1
FDNSLock-Blown up	02ALL	2	15G	G14_037		Non-Converged Contingency	0	0	0.18762	-	SPSCONT-04
FDNSLock-Blown up	02ALL	2	15G	G14_037		Non-Converged Contingency	0	0	0.18762	-	SPSCONT-05B
FDNSLock-Blown up	02ALL	2	15G	G14_037		Non-Converged Contingency	560	560	0.12718	-	POTTER COUNTY INTERCHANGE (WAUK 90343-A) 345/230/13.2KV TRANSFORMER CKT 1
FDNSLock-Blown up	02ALL	2	15G	G14_037		Non-Converged Contingency	956	994	0.07079	-	G14-074T 345.00 - OKLAUNION 345KV CKT 1
FDNSLock-Blown up	02ALL	2	15G	G14_037		Non-Converged Contingency	956	994	0.07079	-	G14-074T 345.00 - TUCO INTERCHANGE 345KV CKT 1
FDNSLock-Blown up	02ALL	2	15SP	G14_037		Non-Converged Contingency	956.09	1051.7	0.26532	-	Hitchland Interchange - WALKTAP7 345.00 345KV CKT 1
FDNSLock-Blown up	02ALL	2	15SP	G14_037		Non-Converged Contingency	956	1052	0.22404	-	FINNEY SWITCHING STATION - HOLCOMB 345KV CKT 1
FDNSLock-Blown up	02ALL	2	15WP	G14_037		Non-Converged Contingency	987.2	1082.8	0.26526	-	Hitchland Interchange - WALKTAP7 345.00 345KV CKT 1
FDNSLock-Blown up	02ALL	2	15WP	G14_037		Non-Converged Contingency	956	1052	0.22404	-	FINNEY SWITCHING STATION - HOLCOMB 345KV CKT 1
FDNSLock-Blown up	02ALL	2	15WP	G14_037		Non-Converged Contingency	987.2	1082.8	0.22404	-	FINNEY SWITCHING STATION - WALKTAP7 345.00 345KV CKT 1
FDNSLock-Blown up	02ALL	2	20WP	G14_037		Non-Converged Contingency	987.2	1082.8	0.25996	-	Hitchland Interchange - WALKTAP7 345.00 345KV CKT 1
FDNSLock-Blown up	02ALL	3	15G	G14_037		Non-Converged Contingency	1420	1775	0.26512	-	G11-14T 345.00 - WOODWARD DISTRICT EHV 345KV CKT 1
FDNSLock-Blown up	02ALL	3	15G	G14_037		Non-Converged Contingency	1420	1775	0.26512	-	G11-14T 345.00 - WOODWARD DISTRICT EHV 345KV CKT 2
FDNSLock-Blown up	02ALL	3	15G	G14_037		Non-Converged Contingency	956.09	1051.7	0.24651	-	Hitchland Interchange - WALKTAP7 345.00 345KV CKT 1
FDNSLock-Blown up	02ALL	3	15G	G14_037		Non-Converged Contingency	956	1052	0.20789	-	FINNEY SWITCHING STATION - HOLCOMB 345KV CKT 1
FDNSLock-Blown up	02ALL	3	15G	G14_037		Non-Converged Contingency	956.09	1051.7	0.20789	-	FINNEY SWITCHING STATION - WALKTAP7 345.00 345KV CKT 1
FDNSLock-Blown up	02ALL	3	15SP	G14_037		Non-Converged Contingency	956.09	1051.7	0.25535	-	Hitchland Interchange - WALKTAP7 345.00 345KV CKT 1
FDNSLock-Blown up	02ALL	3	15WP	G14_037		Non-Converged Contingency	987.2	1082.8	0.25516	-	Hitchland Interchange - WALKTAP7 345.00 345KV CKT 1
FDNSLock-Blown up	02ALL	3	20WP	G14_037		Non-Converged Contingency	987.2	1082.8	0.25096	-	Hitchland Interchange - WALKTAP7 345.00 345KV CKT 1
FDNSLock-Blown up	02ALL	4	15G	G14_037		Non-Converged Contingency	956.09	1051.7	0.23248	-	Hitchland Interchange - WALKTAP7 345.00 345KV CKT 1
FDNSLock-Blown up	02ALL	4	15WP	G14_037		Non-Converged Contingency	987.2	1082.8	0.24119	-	Hitchland Interchange - WALKTAP7 345.00 345KV CKT 1
FDNS	02ALL	0	15G	G14_037	FROM->TO	FPL SWITCH - MOORELAND 138KV CKT 1	287	287	0.05928	122.9988	BASE CASE
FDNS	02ALL	0	20WP	G14_037	FROM->TO	FPL SWITCH - MOORELAND 138KV CKT 1	287	287	0.06616	110.8654	BASE CASE

SOLUTION	GROUP	SCENARIO	SEASON	SOURCE	DIRECTION	MONITORED ELEMENT	RATEA (MVA)	RATEB(MVA)	TDF	TC%LOADING (% MVA)	CONTINGENCY
FDNS	02ALL	0	15WP	G14_037	FROM->TO	FPL SWITCH - MOORELAND 138KV CKT 1	287	287	0.06356	108.2562	BASE CASE
FDNS	02ALL	0	15G	G14_037	TO->FROM	FPL SWITCH - WOODWARD 138KV CKT 1	287	287	0.05928	116.9552	BASE CASE
FDNS	02ALL	0	20WP	G14_037	TO->FROM	FPL SWITCH - WOODWARD 138KV CKT 1	287	287	0.06616	105.3177	BASE CASE
FDNS	02ALL	0	15WP	G14_037	TO->FROM	FPL SWITCH - WOODWARD 138KV CKT 1	287	287	0.06356	102.5629	BASE CASE
FDNS	02ALL	0	15G	G14_037	TO->FROM	WOODWARD - WOODWARD EHV 138KV CKT 1	287	287	0.0479	100	BASE CASE
FDNS	02ALL	2	15G	G14_037	FROM->TO	FPL SWITCH - MOORELAND 138KV CKT 1	287	287	0.0587	121.3133	BASE CASE
FDNS	02ALL	2	20WP	G14_037	FROM->TO	FPL SWITCH - MOORELAND 138KV CKT 1	287	287	0.06491	109.2833	BASE CASE
FDNS	02ALL	2	15WP	G14_037	FROM->TO	FPL SWITCH - MOORELAND 138KV CKT 1	287	287	0.06254	106.4634	BASE CASE
FDNS	02ALL	2	15G	G14_037	TO->FROM	FPL SWITCH - WOODWARD 138KV CKT 1	287	287	0.0587	115.2688	BASE CASE
FDNS	02ALL	2	20WP	G14_037	TO->FROM	FPL SWITCH - WOODWARD 138KV CKT 1	287	287	0.06491	103.6736	BASE CASE
FDNS	02ALL	2	15WP	G14_037	TO->FROM	FPL SWITCH - WOODWARD 138KV CKT 1	287	287	0.06254	100.7	BASE CASE
FDNSLock-Blown up	02ALL	0	15G	G14_038		Non-Converged Contingency	0	0	0.36225	-	SPSCONT-05AX
FDNSLock-Blown up	02ALL	0	15G	G14_038		Non-Converged Contingency	1420	1775	0.24084	-	G11-14T 345.00 - WOODWARD DISTRICT EHV 345KV CKT 1
FDNSLock-Blown up	02ALL	0	15G	G14_038		Non-Converged Contingency	1420	1775	0.24084	-	G11-14T 345.00 - WOODWARD DISTRICT EHV 345KV CKT 2
FDNSLock-Blown up	02ALL	0	15G	G14_038		Non-Converged Contingency	956	1052	0.24011	-	FINNEY SWITCHING STATION - Hitchland Interchange 345KV CKT 1
FDNSLock-Blown up	02ALL	0	15G	G14_038		Non-Converged Contingency	956	1052	0.24011	-	FINNEY SWITCHING STATION - HOLCOMB 345KV CKT 1
FDNSLock-Blown up	02ALL	0	15G	G14_038		Non-Converged Contingency	0	0	0.24011	-	SPP-SWPS-05
FDNSLock-Blown up	02ALL	0	15G	G14_038		Non-Converged Contingency	956	1052	0.21527	-	G14_038T 345.00 - POTTER COUNTY INTERCHANGE 345KV CKT 1
FDNSLock-Blown up	02ALL	0	15G	G14_038		Non-Converged Contingency	560	560	0.21527	-	POTTER COUNTY INTERCHANGE (WAUK 90343-A) 345/230/13.2KV TRANSFORMER CKT 1
FDNSLock-Blown up	02ALL	0	15G	G14_038		Non-Converged Contingency	1420	1775	0.18113	-	G11_051T 345.00 - TATONGA7 345.00 345KV CKT 1
FDNSLock-Blown up	02ALL	0	15G	G14_038		Non-Converged Contingency	1420	1775	0.18113	-	G11_051T 345.00 - WOODWARD DISTRICT EHV 345KV CKT 1
FDNSLock-Blown up	02ALL	0	15G	G14_038		Non-Converged Contingency	1195	1195	0.18113	-	NORTHWEST - TATONGA7 345.00 345KV CKT 1
FDNSLock-Blown up	02ALL	0	15G	G14_038		Non-Converged Contingency	0	0	0.18113	-	SPSCONT-04
FDNSLock-Blown up	02ALL	0	15G	G14_038		Non-Converged Contingency	0	0	0.18113	-	SPSCONT-05B
FDNSLock-Blown up	02ALL	0	15G	G14_038		Non-Converged Contingency	0	0	0.16303	-	SPP-SWPS-02A
FDNSLock-Blown up	02ALL	0	15G	G14_038		Non-Converged Contingency	1413	1517	0.13114	-	BUCKNER7 345.00 - SPEARVILLE 345KV CKT 1
FDNSLock-Blown up	02ALL	0	15G	G14_038		Non-Converged Contingency	0	0	0.10869	-	SPP-SWPS-02
FDNSLock-Blown up	02ALL	0	15G	G14_038		Non-Converged Contingency	1561	1793	0.10693	-	THISTLE7 345.00 - WOODWARD DISTRICT EHV 345KV CKT 1
FDNSLock-Blown up	02ALL	0	15G	G14_038		Non-Converged Contingency	1561	1793	0.10693	-	THISTLE7 345.00 - WOODWARD DISTRICT EHV 345KV CKT 2
FDNSLock-Blown up	02ALL	0	15G	G14_038		Non-Converged Contingency	0	0	0.10257	-	SPP-SWPS-03
FDNSLock-Blown up	02ALL	0	15G	G14_038		Non-Converged Contingency	956	994	0.08447	-	G14-074T 345.00 - OKLAUNION 345KV CKT 1
FDNSLock-Blown up	02ALL	0	15G	G14_038		Non-Converged Contingency	956	994	0.08447	-	G14-074T 345.00 - TUCO INTERCHANGE 345KV CKT 1
FDNSLock-Blown up	02ALL	0	15G	G14_038		Non-Converged Contingency	439	439	0.05434	-	ELK CITY 230KV - SWEETWATER 230KV CKT 1
FDNSLock-Blown up	02ALL	0	15G	G14_038		Non-Converged Contingency	287	316	0.05434	-	ELK CITY 230KV (ELKCTY-6) 230/138/13.8KV TRANSFORMER CKT 1
FDNSLock-Blown up	02ALL	0	15G	G14_038		Non-Converged Contingency	319	351	0.05434	-	GRAPEVINE INTERCHANGE - STATELINE INTERCHANGE 230KV CKT 1
FDNSLock-Blown up	02ALL	0	15G	G14_038		Non-Converged Contingency	349	395	0.05434	-	STATELINE INTERCHANGE - STLN-DEMARC6 230KV CKT 1
FDNSLock-Blown up	02ALL	0	15G	G14_038		Non-Converged Contingency	396	441	0.05434	-	STLN-DEMARC6 - SWEETWATER 230KV CKT 1
FDNSLock-Blown up	02ALL	0	15SP	G14_038		Non-Converged Contingency	956	1052	0.24583	-	FINNEY SWITCHING STATION - Hitchland Interchange 345KV CKT 1
FDNSLock-Blown up	02ALL	0	15SP	G14_038		Non-Converged Contingency	956	1052	0.24583	-	FINNEY SWITCHING STATION - HOLCOMB 345KV CKT 1
FDNSLock-Blown up	02ALL	0	15SP	G14_038		Non-Converged Contingency	0	0	0.24583	-	SPP-SWPS-05
FDNSLock-Blown up	02ALL	0	15SP	G14_038		Non-Converged Contingency	1420	1775	0.24433	-	G11-14T 345.00 - WOODWARD DISTRICT EHV 345KV CKT 1
FDNSLock-Blown up	02ALL	0	15SP	G14_038		Non-Converged Contingency	1420	1775	0.24433	-	G11-14T 345.00 - WOODWARD DISTRICT EHV 345KV CKT 2
FDNSLock-Blown up	02ALL	0	15WP	G14_038		Non-Converged Contingency	987	1083	0.2461	-	FINNEY SWITCHING STATION - Hitchland Interchange 345KV CKT 1
FDNSLock-Blown up	02ALL	0	15WP	G14_038		Non-Converged Contingency	956	1052	0.2461	-	FINNEY SWITCHING STATION - HOLCOMB 345KV CKT 1
FDNSLock-Blown up	02ALL	0	15WP	G14_038		Non-Converged Contingency	0	0	0.2461	-	SPP-SWPS-05
FDNSLock-Blown up	02ALL	0	15WP	G14_038		Non-Converged Contingency	1420	1775	0.24546	-	G11-14T 345.00 - WOODWARD DISTRICT EHV 345KV CKT 1
FDNSLock-Blown up	02ALL	0	15WP	G14_038		Non-Converged Contingency	1420	1775	0.24546	-	G11-14T 345.00 - WOODWARD DISTRICT EHV 345KV CKT 2
FDNSLock-Blown up	02ALL	0	20SP	G14_038		Non-Converged Contingency	956	1052	0.24151	-	FINNEY SWITCHING STATION - HOLCOMB 345KV CKT 1
FDNSLock-Blown up	02ALL	0	20WP	G14_038		Non-Converged Contingency	987	1083	0.23918	-	FINNEY SWITCHING STATION - Hitchland Interchange 345KV CKT 1
FDNSLock-Blown up	02ALL	0	20WP	G14_038		Non-Converged Contingency	956	1052	0.23918	-	FINNEY SWITCHING STATION - HOLCOMB 345KV CKT 1
FDNSLock-Blown up	02ALL	0	20WP	G14_038		Non-Converged Contingency	0	0	0.23918	-	SPP-SWPS-05
FDNSLock-Blown up	02ALL	0	20WP	G14_038		Non-Converged Contingency	1420	1775	0.2381	-	G11-14T 345.00 - WOODWARD DISTRICT EHV 345KV CKT 1
FDNSLock-Blown up	02ALL	0	20WP	G14_038		Non-Converged Contingency	1420	1775	0.2381	-	G11-14T 345.00 - WOODWARD DISTRICT EHV 345KV CKT 2
FDNSLock-Blown up	02ALL	2	15G	G14_038		Non-Converged Contingency	0	0	0.3587	-	SPSCONT-05AX
FDNSLock-Blown up	02ALL	2	15G	G14_038		Non-Converged Contingency	956.09	1051.7	0.25333	-	Hitchland Interchange - WALKTAP7 345.00 345KV CKT 1
FDNSLock-Blown up	02ALL	2	15G	G14_038		Non-Converged Contingency	1420	1775	0.23581	-	G11-14T 345.00 - WOODWARD DISTRICT EHV 345KV CKT 1
FDNSLock-Blown up	02ALL	2	15G	G14_038		Non-Converged Contingency	1420	1775	0.23581	-	G11-14T 345.00 - WOODWARD DISTRICT EHV 345KV CKT 2
FDNSLock-Blown up	02ALL	2	15G	G14_038		Non-Converged Contingency	956	1052	0.21367	-	FINNEY SWITCHING STATION - HOLCOMB 345KV CKT 1
FDNSLock-Blown up	02ALL	2	15G	G14_038		Non-Converged Contingency	956.09	1051.7	0.21367	-	FINNEY SWITCHING STATION - WALKTAP7 345.00 345KV CKT 1
FDNSLock-Blown up	02ALL	2	15G	G14_038		Non-Converged Contingency	560	560	0.21354	-	POTTER COUNTY INTERCHANGE (WAUK 90343-A) 345/230/13.2KV TRANSFORMER CKT 1
FDNSLock-Blown up	02ALL	2	15G	G14_038		Non-Converged Contingency	1420	1775	0.17935	-	G11_051T 345.00 - TATONGA7 345.00 345KV CKT 1
FDNSLock-Blown up	02ALL	2	15G	G14_038		Non-Converged Contingency	1420	1775	0.17935	-	G11_051T 345.00 - WOODWARD DISTRICT EHV 345KV CKT 1
FDNSLock-Blown up	02ALL	2	15G	G14_038		Non-Converged Contingency	1195	1195	0.17935	-	NORTHWEST - TATONGA7 345.00 345KV CKT 1
FDNSLock-Blown up	02ALL	2	15G	G14_038		Non-Converged Contingency	0	0	0.17935	-	SPSCONT-04
FDNSLock-Blown up	02ALL	2	15G	G14_038		Non-Converged Contingency	0	0	0.17935	-	SPSCONT-05B
FDNSLock-Blown up	02ALL	2	15G	G14_038		Non-Converged Contingency	956	994	0.0833	-	G14-074T 345.00 - OKLAUNION 345KV CKT 1
FDNSLock-Blown up	02ALL	2	15G	G14_038		Non-Converged Contingency	956	994	0.0833	-	G14-074T 345.00 - TUCO INTERCHANGE 345KV CKT 1
FDNSLock-Blown up	02ALL	2	15SP	G14_038		Non-Converged Contingency	956.09	1051.7	0.26216	-	Hitchland Interchange - WALKTAP7 345.00 345KV CKT 1
FDNSLock-Blown up	02ALL	2	15SP	G14_038		Non-Converged Contingency	956	1052	0.22136	-	FINNEY SWITCHING STATION - HOLCOMB 345KV CKT 1
FDNSLock-Blown up	02ALL	2	15WP	G14_038		Non-Converged Contingency	987.2	1082.8	0.26211	-	Hitchland Interchange - WALKTAP7 345.00 345KV CKT 1
FDNSLock-Blown up	02ALL	2	15WP	G14_038		Non-Converged Contingency	956	1052	0.22137	-	FINNEY SWITCHING STATION - HOLCOMB 345KV CKT 1
FDNSLock-Blown up	02ALL	2	15WP	G14_038		Non-Converged Contingency	987.2	1082.8	0.22137	-	FINNEY SWITCHING STATION - WALKTAP7 345.00 345KV CKT 1
FDNSLock-Blown up	02ALL	2	20WP	G14_038		Non-Converged Contingency	987.2	1082.8	0.25606	-	Hitchland Interchange - WALKTAP7 345.00 345KV CKT 1
FDNSLock-Blown up	02ALL	3	15G	G14_038		Non-Converged Contingency	1420	1775	0.24521	-	G11-14T 345.00 - WOODWARD DISTRICT EHV 345KV CKT 1
FDNSLock-Blown up	02ALL	3	15G	G14_038		Non-Converged Contingency	1420	1775	0.24521	-	G11-14T 345.00 - WOODWARD DISTRICT EHV 345KV CKT 2

SOLUTION	GROUP	SCENARIO	SEASON	SOURCE	DIRECTION	MONITORED ELEMENT	RATEA (MVA)	RATEB(MVA)	TDF	TC%LOADING (% MVA)	CONTINGENCY
FDNSLock-Blown up	02ALL	3	15G	G14_038		Non-Converged Contingency	956.09	1051.7	0.24389	-	Hitchland Interchange - WALKTAP7 345.00 345KV CKT 1
FDNSLock-Blown up	02ALL	3	15G	G14_038		Non-Converged Contingency	956	1052	0.20566	-	FINNEY SWITCHING STATION - HOLCOMB 345KV CKT 1
FDNSLock-Blown up	02ALL	3	15G	G14_038		Non-Converged Contingency	956.09	1051.7	0.20566	-	FINNEY SWITCHING STATION - WALKTAP7 345.00 345KV CKT 1
FDNSLock-Blown up	02ALL	3	15SP	G14_038		Non-Converged Contingency	956.09	1051.7	0.25266	-	Hitchland Interchange - WALKTAP7 345.00 345KV CKT 1
FDNSLock-Blown up	02ALL	3	15WP	G14_038		Non-Converged Contingency	987.2	1082.8	0.25247	-	Hitchland Interchange - WALKTAP7 345.00 345KV CKT 1
FDNSLock-Blown up	02ALL	3	20WP	G14_038		Non-Converged Contingency	987.2	1082.8	0.24756	-	Hitchland Interchange - WALKTAP7 345.00 345KV CKT 1
FDNSLock-Blown up	02ALL	4	15G	G14_038		Non-Converged Contingency	956.09	1051.7	0.23149	-	Hitchland Interchange - WALKTAP7 345.00 345KV CKT 1
FDNSLock-Blown up	02ALL	4	15WP	G14_038		Non-Converged Contingency	987.2	1082.8	0.24013	-	Hitchland Interchange - WALKTAP7 345.00 345KV CKT 1
FDNS	02ALL	0	15G	G14_038	FROM->TO	FPL SWITCH - MOORELAND 138KV CKT 1	287	287	0.05462	122.9988	BASE CASE
FDNS	02ALL	0	20WP	G14_038	FROM->TO	FPL SWITCH - MOORELAND 138KV CKT 1	287	287	0.06179	110.8654	BASE CASE
FDNS	02ALL	0	15WP	G14_038	FROM->TO	FPL SWITCH - MOORELAND 138KV CKT 1	287	287	0.0587	108.2562	BASE CASE
FDNS	02ALL	0	15G	G14_038	TO->FROM	FPL SWITCH - WOODWARD 138KV CKT 1	287	287	0.05462	116.9552	BASE CASE
FDNS	02ALL	0	20WP	G14_038	TO->FROM	FPL SWITCH - WOODWARD 138KV CKT 1	287	287	0.06179	105.3177	BASE CASE
FDNS	02ALL	0	15WP	G14_038	TO->FROM	FPL SWITCH - WOODWARD 138KV CKT 1	287	287	0.0587	102.5629	BASE CASE
FDNS	02ALL	0	20SP	G14_038	FROM->TO	POTTER COUNTY INTERCHANGE (WAUK 90343-A) 345/230/13.2KV TRANSFORMER CKT 1	560	560	0.24715	112.4617	FINNEY SWITCHING STATION - Hitchland Interchange 345KV CKT 1
FDNS	02ALL	0	20SP	G14_038	FROM->TO	POTTER COUNTY INTERCHANGE (WAUK 90343-A) 345/230/13.2KV TRANSFORMER CKT 1	560	560	0.24715	112.1427	SPP-SWPS-05
FDNS	02ALL	0	20SP	G14_038	FROM->TO	POTTER COUNTY INTERCHANGE (WAUK 90343-A) 345/230/13.2KV TRANSFORMER CKT 1	560	560	0.22851	109.7011	HITCHLAND INTERCHANGE - MOORE COUNTY INTERCHANGE 230KV CKT 1
FDNS	02ALL	0	20SP	G14_038	FROM->TO	POTTER COUNTY INTERCHANGE (WAUK 90343-A) 345/230/13.2KV TRANSFORMER CKT 1	560	560	0.22851	109.7011	HITCHLAND INTERCHANGE - MOORE COUNTY INTERCHANGE 230KV CKT 1
FDNS	02ALL	0	20SP	G14_038	FROM->TO	POTTER COUNTY INTERCHANGE (WAUK 90343-A) 345/230/13.2KV TRANSFORMER CKT 1	560	560	0.21609	109.33	GEN525561 1-TOLK GEN #1 24 KV
FDNS	02ALL	0	20SP	G14_038	FROM->TO	POTTER COUNTY INTERCHANGE (WAUK 90343-A) 345/230/13.2KV TRANSFORMER CKT 1	560	560	0.24715	108.4447	FINNEY SWITCHING STATION - Hitchland Interchange 345KV CKT 1
FDNS	02ALL	0	20SP	G14_038	FROM->TO	POTTER COUNTY INTERCHANGE (WAUK 90343-A) 345/230/13.2KV TRANSFORMER CKT 1	560	560	0.24715	108.1611	SPP-SWPS-05
FDNS	02ALL	0	20SP	G14_038	FROM->TO	POTTER COUNTY INTERCHANGE (WAUK 90343-A) 345/230/13.2KV TRANSFORMER CKT 1	560	560	0.23583	107.7648	G11-14T 345.00 - WOODWARD DISTRICT EHV 345KV CKT 1
FDNS	02ALL	0	20SP	G14_038	FROM->TO	POTTER COUNTY INTERCHANGE (WAUK 90343-A) 345/230/13.2KV TRANSFORMER CKT 1	560	560	0.23583	107.7648	G11-14T 345.00 - WOODWARD DISTRICT EHV 345KV CKT 2
FDNS	02ALL	0	20SP	G14_038	FROM->TO	POTTER COUNTY INTERCHANGE (WAUK 90343-A) 345/230/13.2KV TRANSFORMER CKT 1	560	560	0.21609	107.3963	GEN525562 1-TOLK GEN #2 24 KV
FDNS	02ALL	0	20SP	G14_038	FROM->TO	POTTER COUNTY INTERCHANGE (WAUK 90343-A) 345/230/13.2KV TRANSFORMER CKT 1	560	560	0.22851	106.7836	HITCHLAND INTERCHANGE - MOORE COUNTY INTERCHANGE 230KV CKT 1
FDNS	02ALL	0	20SP	G14_038	FROM->TO	POTTER COUNTY INTERCHANGE (WAUK 90343-A) 345/230/13.2KV TRANSFORMER CKT 1	560	560	0.22851	106.7836	HITCHLAND INTERCHANGE - MOORE COUNTY INTERCHANGE 230KV CKT 1
FDNS	02ALL	0	20SP	G14_038	FROM->TO	POTTER COUNTY INTERCHANGE (WAUK 90343-A) 345/230/13.2KV TRANSFORMER CKT 1	560	560	0.21609	106.6879	GEN525561 1-TOLK GEN #1 24 KV
FDNS	02ALL	0	20SP	G14_038	FROM->TO	POTTER COUNTY INTERCHANGE (WAUK 90343-A) 345/230/13.2KV TRANSFORMER CKT 1	560	560	0.21609	105.2559	GEN523972 1-HARRINGTON GEN #2 24 KV
FDNS	02ALL	0	20SP	G14_038	FROM->TO	POTTER COUNTY INTERCHANGE (WAUK 90343-A) 345/230/13.2KV TRANSFORMER CKT 1	560	560	0.21609	105.2555	GEN523973 1-HARRINGTON GEN #3 24 KV
FDNS	02ALL	0	20SP	G14_038	FROM->TO	POTTER COUNTY INTERCHANGE (WAUK 90343-A) 345/230/13.2KV TRANSFORMER CKT 1	560	560	0.21609	105.2551	GEN523971 1-HARRINGTON GEN #1 24 KV
FDNS	02ALL	0	20SP	G14_038	FROM->TO	POTTER COUNTY INTERCHANGE (WAUK 90343-A) 345/230/13.2KV TRANSFORMER CKT 1	560	560	0.21609	104.878	GEN525562 1-TOLK GEN #2 24 KV
FDNS	02ALL	0	20SP	G14_038	FROM->TO	POTTER COUNTY INTERCHANGE (WAUK 90343-A) 345/230/13.2KV TRANSFORMER CKT 1	560	560	0.23583	104.5618	G11-14T 345.00 - WOODWARD DISTRICT EHV 345KV CKT 1
FDNS	02ALL	0	20SP	G14_038	FROM->TO	POTTER COUNTY INTERCHANGE (WAUK 90343-A) 345/230/13.2KV TRANSFORMER CKT 1	560	560	0.23583	104.5618	G11-14T 345.00 - WOODWARD DISTRICT EHV 345KV CKT 2
FDNS	02ALL	0	20SP	G14_038	FROM->TO	POTTER COUNTY INTERCHANGE (WAUK 90343-A) 345/230/13.2KV TRANSFORMER CKT 1	560	560	0.21609	102.8109	GEN523972 1-HARRINGTON GEN #2 24 KV
FDNS	02ALL	0	20SP	G14_038	FROM->TO	POTTER COUNTY INTERCHANGE (WAUK 90343-A) 345/230/13.2KV TRANSFORMER CKT 1	560	560	0.21609	102.8105	GEN523973 1-HARRINGTON GEN #3 24 KV
FDNS	02ALL	0	20SP	G14_038	FROM->TO	POTTER COUNTY INTERCHANGE (WAUK 90343-A) 345/230/13.2KV TRANSFORMER CKT 1	560	560	0.21609	102.8102	GEN523971 1-HARRINGTON GEN #1 24 KV
FDNS	02ALL	0	20SP	G14_038	FROM->TO	POTTER COUNTY INTERCHANGE (WAUK 90343-A) 345/230/13.2KV TRANSFORMER CKT 1	560	560	0.21577	102.7341	BORDER 7345.00 - TUCO_2 345.00 345KV CKT 1
FDNS	02ALL	0	20SP	G14_038	FROM->TO	POTTER COUNTY INTERCHANGE (WAUK 90343-A) 345/230/13.2KV TRANSFORMER CKT 1	560	560	0.21609	101.7226	GEN524023 1-NICHOLS GEN #3 22 KV
FDNS	02ALL	0	20SP	G14_038	FROM->TO	POTTER COUNTY INTERCHANGE (WAUK 90343-A) 345/230/13.2KV TRANSFORMER CKT 1	560	560	0.22642	101.4699	NORTHWEST - TATONGA7 345.00 345KV CKT 1
FDNS	02ALL	0	20SP	G14_038	FROM->TO	POTTER COUNTY INTERCHANGE (WAUK 90343-A) 345/230/13.2KV TRANSFORMER CKT 1	560	560	0.22642	101.2955	SPSCONT-05B
FDNS	02ALL	0	20SP	G14_038	FROM->TO	POTTER COUNTY INTERCHANGE (WAUK 90343-A) 345/230/13.2KV TRANSFORMER CKT 1	560	560	0.22339	101.1149	BUCKNER7 345.00 - SPEARVILLE 345KV CKT 1
FDNS	02ALL	0	20SP	G14_038	FROM->TO	POTTER COUNTY INTERCHANGE (WAUK 90343-A) 345/230/13.2KV TRANSFORMER CKT 1	560	560	0.22642	100.9379	SPSCONT-04
FDNS	02ALL	0	20SP	G14_038	FROM->TO	POTTER COUNTY INTERCHANGE (WAUK 90343-A) 345/230/13.2KV TRANSFORMER CKT 1	560	560	0.21577	100.4501	BORDER 7345.00 - TUCO_2 345.00 345KV CKT 1
FDNS	02ALL	0	20SP	G14_038	FROM->TO	POTTER COUNTY INTERCHANGE (WAUK 90343-A) 345/230/13.2KV TRANSFORMER CKT 1	560	560	0.21609	100.2908	GEN527903 1-HOBBS PLANT #3 (ST)
FDNS	02ALL	0	20SP	G14_038	FROM->TO	POTTER COUNTY INTERCHANGE (WAUK 90343-A) 345/230/13.2KV TRANSFORMER CKT 1	560	560	0.21577	100.2584	BORDER 7345.00 - WOODWARD DISTRICT EHV 345KV CKT 1
FDNS	02ALL	0	20SP	G14_038	FROM->TO	POTTER COUNTY INTERCHANGE (WAUK 90343-A) 345/230/13.2KV TRANSFORMER CKT 1	560	560	0.21982	100.2549	Hansford County Switch Station - SPEARMAN INTERCHANGE 115KV CKT 1
FDNS	02ALL	0	20SP	G14_038	FROM->TO	POTTER COUNTY INTERCHANGE (WAUK 90343-A) 345/230/13.2KV TRANSFORMER CKT 1	560	560	0.22642	99.5	G11_051T 345.00 - TATONGA7 345.00 345KV CKT 1
FDNS	02ALL	0	20SP	G14_038	FROM->TO	POTTER COUNTY INTERCHANGE (WAUK 90343-A) 345/230/13.2KV TRANSFORMER CKT 1	560	560	0.22339	99.5	BUCKNER7 345.00 - HOLCOMB 345KV CKT 1
FDNS	02ALL	0	20SP	G14_038	FROM->TO	POTTER COUNTY INTERCHANGE (WAUK 90343-A) 345/230/13.2KV TRANSFORMER CKT 1	560	560	0.21609	99.5	GEN524023 1-NICHOLS GEN #3 22 KV
FDNS	02ALL	0	15G	G14_038	TO->FROM	WOODWARD - WOODWARD EHV 138KV CKT 1	287	287	0.04418	100	BASE CASE
FDNS	02ALL	2	15G	G14_038	FROM->TO	FPL SWITCH - MOORELAND 138KV CKT 1	287	287	0.05405	121.3133	BASE CASE
FDNS	02ALL	2	20WP	G14_038	FROM->TO	FPL SWITCH - MOORELAND 138KV CKT 1	287	287	0.06055	109.2833	BASE CASE
FDNS	02ALL	2	15WP	G14_038	FROM->TO	FPL SWITCH - MOORELAND 138KV CKT 1	287	287	0.05769	106.4634	BASE CASE
FDNS	02ALL	2	15G	G14_038	TO->FROM	FPL SWITCH - WOODWARD 138KV CKT 1	287	287	0.05405	115.2688	BASE CASE
FDNS	02ALL	2	20WP	G14_038	TO->FROM	FPL SWITCH - WOODWARD 138KV CKT 1	287	287	0.06055	103.6736	BASE CASE
FDNS	02ALL	2	15WP	G14_038	TO->FROM	FPL SWITCH - WOODWARD 138KV CKT 1	287	287	0.05769	100.7	BASE CASE
FDNS	02ALL	2	20SP	G14_038	FROM->TO	POTTER COUNTY INTERCHANGE (WAUK 90343-A) 345/230/13.2KV TRANSFORMER CKT 1	560	560	0.24654	112.6898	Hitchland Interchange - WALKTAP7 345.00 345KV CKT 1
FDNS	02ALL	2	20SP	G14_038	FROM->TO	POTTER COUNTY INTERCHANGE (WAUK 90343-A) 345/230/13.2KV TRANSFORMER CKT 1	560	560	0.24654	108.6247	Hitchland Interchange - WALKTAP7 345.00 345KV CKT 1
FDNS	02ALL	2	20SP	G14_038	FROM->TO	POTTER COUNTY INTERCHANGE (WAUK 90343-A) 345/230/13.2KV TRANSFORMER CKT 1	560	560	0.22539	107.5993	HITCHLAND INTERCHANGE - MOORE COUNTY INTERCHANGE 230KV CKT 1
FDNS	02ALL	2	20SP	G14_038	FROM->TO	POTTER COUNTY INTERCHANGE (WAUK 90343-A) 345/230/13.2KV TRANSFORMER CKT 1	560	560	0.22539	107.5993	HITCHLAND INTERCHANGE - MOORE COUNTY INTERCHANGE 230KV CKT 1
FDNS	02ALL	2	20SP	G14_038	FROM->TO	POTTER COUNTY INTERCHANGE (WAUK 90343-A) 345/230/13.2KV TRANSFORMER CKT 1	560	560	0.21344	107.5834	GEN525561 1-TOLK GEN #1 24 KV
FDNS	02ALL	2	20SP	G14_038	FROM->TO	POTTER COUNTY INTERCHANGE (WAUK 90343-A) 345/230/13.2KV TRANSFORMER CKT 1	560	560	0.21344	105.8024	GEN525562 1-TOLK GEN #2 24 KV
FDNS	02ALL	2	20SP	G14_038	FROM->TO	POTTER COUNTY INTERCHANGE (WAUK 90343-A) 345/230/13.2KV TRANSFORMER CKT 1	560	560	0.21344	105.1039	GEN525561 1-TOLK GEN #1 24 KV
FDNS	02ALL	2	20SP	G14_038	FROM->TO	POTTER COUNTY INTERCHANGE (WAUK 90343-A) 345/230/13.2KV TRANSFORMER CKT 1	560	560	0.22539	104.8906	HITCHLAND INTERCHANGE - MOORE COUNTY INTERCHANGE 230KV CKT 1
FDNS	02ALL	2	20SP	G14_038	FROM->TO	POTTER COUNTY INTERCHANGE (WAUK 90343-A) 345/230/13.2KV TRANSFORMER CKT 1	560	560	0.22539	104.8906	HITCHLAND INTERCHANGE - MOORE COUNTY INTERCHANGE 230KV CKT 1
FDNS	02ALL	2	20SP	G14_038	FROM->TO	POTTER COUNTY INTERCHANGE (WAUK 90343-A) 345/230/13.2KV TRANSFORMER CKT 1	560	560	0.23386	104.1401	FINNEY SWITCHING STATION - HOLCOMB 345KV CKT 1
FDNS	02ALL	2	20SP	G14_038	FROM->TO	POTTER COUNTY INTERCHANGE (WAUK 90343-A) 345/230/13.2KV TRANSFORMER CKT 1	560	560	0.21344	103.6172	GEN523972 1-HARRINGTON GEN #2 24 KV
FDNS	02ALL	2	20SP	G14_038	FROM->TO	POTTER COUNTY INTERCHANGE (WAUK 90343-A) 345/230/13.2KV TRANSFORMER CKT 1	560	560	0.21344	103.6167	GEN523973 1-HARRINGTON GEN #3 24 KV
FDNS	02ALL	2	20SP	G14_038	FROM->TO	POTTER COUNTY INTERCHANGE (WAUK 90343-A) 345/230/13.2KV TRANSFORMER CKT 1	560	560	0.21344	103.6164	GEN523971 1-HARRINGTON GEN #1 24 KV
FDNS	02ALL	2	20SP	G14_038	FROM->TO	POTTER COUNTY INTERCHANGE (WAUK 90343-A) 345/230/13.2KV TRANSFORMER CKT 1	560	560	0.21344	103.4329	GEN525562 1-TOLK GEN #2 24 KV
FDNS	02ALL	2	20SP	G14_038	FROM->TO	POTTER COUNTY INTERCHANGE (WAUK 90343-A) 345/230/13.2KV TRANSFORMER CKT 1	560	560	0.23386	101.4446	FINNEY SWITCHING STATION - HOLCOMB 345KV CKT 1
FDNS	02ALL	2	20SP	G14_038	FROM->TO	POTTER COUNTY INTERCHANGE (WAUK 90343-A) 345/230/13.2KV TRANSFORMER CKT 1	560	560	0.21344	101.3202	GEN523972 1-HARRINGTON GEN #2 24 KV
FDNS	02ALL	2	20SP	G14_038	FROM->TO	POTTER COUNTY INTERCHANGE (WAUK 90343-A) 345/230/13.2KV TRANSFORMER CKT 1	560	560	0.21344	101.3197	GEN523973 1-HARRINGTON GEN #3 24 KV
FDNS	02ALL	2	20SP	G14_038	FROM->TO	POTTER COUNTY INTERCHANGE (WAUK 90343-A) 345/230/13.2KV TRANSFORMER CKT 1	560	560	0.21344	101.3194	GEN523971 1-HARRINGTON GEN #1 24 KV
FDNS	02ALL	2	20SP	G14_038	FROM->TO	POTTER COUNTY INTERCHANGE (WAUK 90343-A) 345/230/13.2KV TRANSFORMER CKT 1	560	560	0.21308	101.122	BORDER 7345.00 - TUCO_2 345.00 345KV CKT 1

SOLUTION	GROUP	SCENARIO	SEASON	SOURCE	DIRECTION	MONITORED ELEMENT	RATEA (MVA)	RATEB(MVA)	TDF	TC%LOADING (% MVA)	CONTINGENCY
FDNS	02ALL	2	20SP	G14_038	FROM->TO	POTTER COUNTY INTERCHANGE (WAUK 90343-A) 345/230/13.2KV TRANSFORMER CKT 1	560	560	0.23386	101.0431	FINNEY SWITCHING STATION - WALKTAP7 345.00 345KV CKT 1
FDNS	02ALL	2	20SP	G14_038	FROM->TO	POTTER COUNTY INTERCHANGE (WAUK 90343-A) 345/230/13.2KV TRANSFORMER CKT 1	560	560	0.21344	100	GEN524023 1-NICHOLS GEN #3 22 KV
FDNS	02ALL	2	20SP	G14_038	FROM->TO	POTTER COUNTY INTERCHANGE (WAUK 90343-A) 345/230/13.2KV TRANSFORMER CKT 1	560	560	0.22348	99.5	NORTHWEST - TATONGA7 345.00 345KV CKT 1
FDNS	02ALL	3	20SP	G14_038	FROM->TO	POTTER COUNTY INTERCHANGE (WAUK 90343-A) 345/230/13.2KV TRANSFORMER CKT 1	560	560	0.23872	104.851	Hitchland Interchange - WALKTAP7 345.00 345KV CKT 1
FDNS	02ALL	3	20SP	G14_038	FROM->TO	POTTER COUNTY INTERCHANGE (WAUK 90343-A) 345/230/13.2KV TRANSFORMER CKT 1	560	560	0.20801	103.6625	GEN525561 1-TOLK GEN #1 24 KV
FDNS	02ALL	3	20SP	G14_038	FROM->TO	POTTER COUNTY INTERCHANGE (WAUK 90343-A) 345/230/13.2KV TRANSFORMER CKT 1	560	560	0.21899	102.8479	HITCHLAND INTERCHANGE - MOORE COUNTY INTERCHANGE 230KV CKT 1
FDNS	02ALL	3	20SP	G14_038	FROM->TO	POTTER COUNTY INTERCHANGE (WAUK 90343-A) 345/230/13.2KV TRANSFORMER CKT 1	560	560	0.21899	102.8479	HITCHLAND INTERCHANGE - MOORE COUNTY INTERCHANGE 230KV CKT 1
FDNS	02ALL	3	20SP	G14_038	FROM->TO	POTTER COUNTY INTERCHANGE (WAUK 90343-A) 345/230/13.2KV TRANSFORMER CKT 1	560	560	0.20801	102.1649	GEN525562 1-TOLK GEN #2 24 KV
FDNS	02ALL	3	20SP	G14_038	FROM->TO	POTTER COUNTY INTERCHANGE (WAUK 90343-A) 345/230/13.2KV TRANSFORMER CKT 1	560	560	0.2282	101.8824	G11-14T 345.00 - WOODWARD DISTRICT EHV 345KV CKT 1
FDNS	02ALL	3	20SP	G14_038	FROM->TO	POTTER COUNTY INTERCHANGE (WAUK 90343-A) 345/230/13.2KV TRANSFORMER CKT 1	560	560	0.2282	101.8824	G11-14T 345.00 - WOODWARD DISTRICT EHV 345KV CKT 2
FDNS	02ALL	3	20SP	G14_038	FROM->TO	POTTER COUNTY INTERCHANGE (WAUK 90343-A) 345/230/13.2KV TRANSFORMER CKT 1	560	560	0.23872	101.8485	Hitchland Interchange - WALKTAP7 345.00 345KV CKT 1
FDNS	02ALL	3	20SP	G14_038	FROM->TO	POTTER COUNTY INTERCHANGE (WAUK 90343-A) 345/230/13.2KV TRANSFORMER CKT 1	560	560	0.20801	101.4722	GEN525561 1-TOLK GEN #1 24 KV
FDNS	02ALL	3	20SP	G14_038	FROM->TO	POTTER COUNTY INTERCHANGE (WAUK 90343-A) 345/230/13.2KV TRANSFORMER CKT 1	560	560	0.21899	100.5088	HITCHLAND INTERCHANGE - MOORE COUNTY INTERCHANGE 230KV CKT 1
FDNS	02ALL	3	20SP	G14_038	FROM->TO	POTTER COUNTY INTERCHANGE (WAUK 90343-A) 345/230/13.2KV TRANSFORMER CKT 1	560	560	0.21899	100.5088	HITCHLAND INTERCHANGE - MOORE COUNTY INTERCHANGE 230KV CKT 1
FDNS	02ALL	3	20SP	G14_038	FROM->TO	POTTER COUNTY INTERCHANGE (WAUK 90343-A) 345/230/13.2KV TRANSFORMER CKT 1	560	560	0.20801	100.0551	GEN525562 1-TOLK GEN #2 24 KV
FDNS	02ALL	3	20SP	G14_038	FROM->TO	POTTER COUNTY INTERCHANGE (WAUK 90343-A) 345/230/13.2KV TRANSFORMER CKT 1	560	560	0.20801	99.8	GEN523971 1-HARRINGTON GEN #1 24 KV
FDNS	02ALL	3	20SP	G14_038	FROM->TO	POTTER COUNTY INTERCHANGE (WAUK 90343-A) 345/230/13.2KV TRANSFORMER CKT 1	560	560	0.20801	99.8	GEN523972 1-HARRINGTON GEN #2 24 KV
FDNS	02ALL	3	20SP	G14_038	FROM->TO	POTTER COUNTY INTERCHANGE (WAUK 90343-A) 345/230/13.2KV TRANSFORMER CKT 1	560	560	0.20801	99.8	GEN523973 1-HARRINGTON GEN #3 24 KV
FDNSLock-Blown up	06ALL	0	15G	G14_046		Non-Converged Contingency	0	0	1.40063	-	SPP-SWPS-06
FDNSLock-Blown up	06ALL	0	15G	G14_046		Non-Converged Contingency	319	351	0.38421	-	CHAVES COUNTY INTERCHANGE - SAN JUAN MESA TAP 230KV CKT 1
FDNSLock-Blown up	06ALL	0	15G	G14_046		Non-Converged Contingency	0	0	0.32444	-	SPSCONT-02X
FDNSLock-Blown up	06ALL	0	15G	G14_046		Non-Converged Contingency	717	926	0.28013	-	CROSSROADS 345.00 - TOLK STATION 345KV CKT 1
FDNSLock-Blown up	06ALL	0	15G	G14_046		Non-Converged Contingency	560	560	0.28013	-	TOLK STATION (ABBXNL844501) 345/230/13.2KV TRANSFORMER CKT 1
FDNSLock-Blown up	06ALL	0	15G	G14_046		Non-Converged Contingency	478	502	0.2095	-	TOLK STATION EAST - TUCO INTERCHANGE 230KV CKT 1
FDNSLock-Blown up	06ALL	0	15G	G14_046		Non-Converged Contingency	0	0	0.20274	-	SPP-SWPS-T59
FDNSLock-Blown up	06ALL	0	15G	G14_046		Non-Converged Contingency	0	0	0.19275	-	SPSCONT-05AX
FDNSLock-Blown up	06ALL	0	15G	G14_046		Non-Converged Contingency	478	502	0.19053	-	NEWHART 230 - PLANT X STATION 230KV CKT 1
FDNSLock-Blown up	06ALL	0	15G	G14_046		Non-Converged Contingency	956	994	0.18681	-	G14-074T 345.00 - OKLAUNION 345KV CKT 1
FDNSLock-Blown up	06ALL	0	15G	G14_046		Non-Converged Contingency	956	994	0.18681	-	G14-074T 345.00 - TUCO INTERCHANGE 345KV CKT 1
FDNSLock-Blown up	06ALL	0	15G	G14_046		Non-Converged Contingency	956	994	0.18681	-	OKLAUNION 345KV SWITCHED SHUNT
FDNSLock-Blown up	06ALL	0	15G	G14_046		Non-Converged Contingency	560	560	0.17342	-	TUCO INTERCHANGE (GE M1022338) 345/230/13.2KV TRANSFORMER CKT 1
FDNSLock-Blown up	06ALL	0	15G	G14_046		Non-Converged Contingency	1195	1195	0.16927	-	GRACEMONT - MINCO 345KV CKT 1
FDNSLock-Blown up	06ALL	0	15G	G14_046		Non-Converged Contingency	319	351	0.16404	-	BUSHLAND INTERCHANGE - DEAF SMITH COUNTY INTERCHANGE 230KV CKT 1
FDNSLock-Blown up	06ALL	0	15G	G14_046		Non-Converged Contingency	319	351	0.16404	-	BUSHLAND INTERCHANGE 230KV SWITCHED SHUNT
FDNSLock-Blown up	06ALL	0	15G	G14_046		Non-Converged Contingency	956	1052	0.16222	-	G14_038T 345.00 - Hitchland Interchange 345KV CKT 1
FDNSLock-Blown up	06ALL	0	15G	G14_046		Non-Converged Contingency	956	1052	0.16222	-	G14_038T 345.00 - POTTER COUNTY INTERCHANGE 345KV CKT 1
FDNSLock-Blown up	06ALL	0	15G	G14_046		Non-Converged Contingency	560	560	0.16222	-	POTTER COUNTY INTERCHANGE (WAUK 90343-A) 345/230/13.2KV TRANSFORMER CKT 1
FDNSLock-Blown up	06ALL	0	15G	G14_046		Non-Converged Contingency	319	351	0.16167	-	LUBBOCK SOUTH INTERCHANGE - WOLFFORTH INTERCHANGE 230KV CKT 1
FDNSLock-Blown up	06ALL	0	15G	G14_046		Non-Converged Contingency	319	351	0.15986	-	SUNDOWN INTERCHANGE - WOLFFORTH INTERCHANGE 230KV CKT 1
FDNSLock-Blown up	06ALL	0	15G	G14_046		Non-Converged Contingency	1330	1940	0.15276	-	CHISHOLM7 345.00 - GRACEMONT 345KV CKT 1
FDNSLock-Blown up	06ALL	0	15G	G14_046		Non-Converged Contingency	560	560	0.15231	-	TUCO_2 345.00 (TUCO_2 XFMR) 345/230/13.2KV TRANSFORMER CKT 1
FDNSLock-Blown up	06ALL	0	15G	G14_046		Non-Converged Contingency	560	644	0.15113	-	TUCO INTERCHANGE (SIEM 8743066) 345/230/13.2KV TRANSFORMER CKT 2
FDNSLock-Blown up	06ALL	0	15G	G14_046		Non-Converged Contingency	1792	1792	0.14512	-	CHISHOLM7 345.00 - WOODWARD DISTRICT EHV 345KV CKT 1
FDNSLock-Blown up	06ALL	0	15G	G14_046		Non-Converged Contingency	1792	1792	0.14502	-	BORDER 7345.00 - CHISHOLM7 345.00 345KV CKT 1
FDNSLock-Blown up	06ALL	0	15G	G14_046		Non-Converged Contingency	1792	1792	0.14502	-	BORDER 7345.00 - CHISHOLM7 345.00 345KV CKT 2
FDNSLock-Blown up	06ALL	0	15G	G14_046		Non-Converged Contingency	1420	1775	0.14502	-	BORDER 7345.00 - TUCO_2 345.00 345KV CKT 1
FDNSLock-Blown up	06ALL	0	15G	G14_046		Non-Converged Contingency	1420	1775	0.14502	-	BORDER 7345.00 - TUCO_2 345.00 345KV CKT 2
FDNSLock-Blown up	06ALL	0	15G	G14_046		Non-Converged Contingency	319	351	0.14409	-	BUSHLAND INTERCHANGE - POTTER COUNTY INTERCHANGE 230KV CKT 1
FDNSLock-Blown up	06ALL	0	15G	G14_046		Non-Converged Contingency	478	478	0.14039	-	DEAF SMITH COUNTY INTERCHANGE - G14-068T 230.00 230KV CKT 1
FDNSLock-Blown up	06ALL	0	15G	G14_046		Non-Converged Contingency	478	478	0.14039	-	G14-068T 230.00 - PLANT X STATION 230KV CKT 1
FDNSLock-Blown up	06ALL	0	15G	G14_046		Non-Converged Contingency	1420	1775	0.13774	-	TUCO INTERCHANGE - TUCO_2 345.00 345KV CKT 1
FDNSLock-Blown up	06ALL	0	15G	G14_046		Non-Converged Contingency	0	0	0.13251	-	SPP-SWPS-02
FDNSLock-Blown up	06ALL	0	15G	G14_046		Non-Converged Contingency	319	351	0.13108	-	AMOCO SWITCHING STATION - SUNDOWN INTERCHANGE 230KV CKT 1
FDNSLock-Blown up	06ALL	0	15G	G14_046		Non-Converged Contingency	319	351	0.13108	-	AMOCO SWITCHING STATION - YOAKUM COUNTY INTERCHANGE 230KV CKT 1
FDNSLock-Blown up	06ALL	0	15G	G14_046		Non-Converged Contingency	956	1052	0.12535	-	FINNEY SWITCHING STATION - Hitchland Interchange 345KV CKT 1
FDNSLock-Blown up	06ALL	0	15G	G14_046		Non-Converged Contingency	956	1052	0.12535	-	FINNEY SWITCHING STATION - HOLCOMB 345KV CKT 1
FDNSLock-Blown up	06ALL	0	15G	G14_046		Non-Converged Contingency	0	0	0.12535	-	SPP-SWPS-05
FDNSLock-Blown up	06ALL	0	15G	G14_046		Non-Converged Contingency	0	0	0.12482	-	SPP-SWPS-03
FDNSLock-Blown up	06ALL	0	15G	G14_046		Non-Converged Contingency	478	502	0.11955	-	TUCO INTERCHANGE - TUCO_2 230.00 230KV CKT 1
FDNSLock-Blown up	06ALL	0	15G	G14_046		Non-Converged Contingency	478	502	0.11334	-	NEWHART 230 - POTTER COUNTY INTERCHANGE 230KV CKT 1
FDNSLock-Blown up	06ALL	0	15G	G14_046		Non-Converged Contingency	478	502	0.10963	-	JONES STATION - TUCO INTERCHANGE 230KV CKT 1
FDNSLock-Blown up	06ALL	0	15G	G14_046		Non-Converged Contingency	0	0	0.10563	-	SPP-SWPS-T14
FDNSLock-Blown up	06ALL	0	15G	G14_046		Non-Converged Contingency	1420	1775	0.09637	-	G11_051T 345.00 - TATONGA7 345.00 345KV CKT 1
FDNSLock-Blown up	06ALL	0	15G	G14_046		Non-Converged Contingency	1420	1775	0.09637	-	G11_051T 345.00 - WOODWARD DISTRICT EHV 345KV CKT 1
FDNSLock-Blown up	06ALL	0	15G	G14_046		Non-Converged Contingency	1195	1195	0.09637	-	NORTHWEST - TATONGA7 345.00 345KV CKT 1
FDNSLock-Blown up	06ALL	0	15G	G14_046		Non-Converged Contingency	0	0	0.09637	-	SPSCONT-04
FDNSLock-Blown up	06ALL	0	15G	G14_046		Non-Converged Contingency	0	0	0.09637	-	SPSCONT-05B
FDNSLock-Blown up	06ALL	0	15G	G14_046		Non-Converged Contingency	1420	1775	0.08155	-	G11-14T 345.00 - WOODWARD DISTRICT EHV 345KV CKT 1
FDNSLock-Blown up	06ALL	0	15G	G14_046		Non-Converged Contingency	1420	1775	0.08155	-	G11-14T 345.00 - WOODWARD DISTRICT EHV 345KV CKT 2
FDNSLock-Blown up	06ALL	0	15G	G14_046		Non-Converged Contingency	319	351	0.08016	-	AMARILLO SOUTH INTERCHANGE - SWISHER COUNTY INTERCHANGE 230KV CKT 1
FDNSLock-Blown up	06ALL	0	15G	G14_046		Non-Converged Contingency	218	239	0.06993	-	WOLFFORTH INTERCHANGE - YUMA INTERCHANGE 115KV CKT 1
FDNSLock-Blown up	06ALL	0	15G	G14_046		Non-Converged Contingency	478	502	0.06809	-	HITCHLAND INTERCHANGE - MOORE COUNTY INTERCHANGE 230KV CKT 1
FDNSLock-Blown up	06ALL	0	15G	G14_046		Non-Converged Contingency	478	502	0.06809	-	HITCHLAND INTERCHANGE - MOORE COUNTY INTERCHANGE 230KV CKT 1
FDNSLock-Blown up	06ALL	0	15G	G14_046		Non-Converged Contingency	439	439	0.06626	-	CHISHOLM6 230.00 - SWEETWATER 230KV CKT 1
FDNSLock-Blown up	06ALL	0	15G	G14_046		Non-Converged Contingency	319	351	0.06626	-	GRAPEVINE INTERCHANGE - STATELINE INTERCHANGE 230KV CKT 1

SOLUTION	GROUP	SCENARIO	SEASON	SOURCE	DIRECTION	MONITORED ELEMENT	RATEA (MVA)	RATEB(MVA)	TDF	TC%LOADING (% MVA)	CONTINGENCY
FDNSLock-Blown up	06ALL	0	15G	G14_046		Non-Converged Contingency	349	395	0.06626	-	STATELINE INTERCHANGE - STLN-DEMARC6 230KV CKT 1
FDNSLock-Blown up	06ALL	0	15G	G14_046		Non-Converged Contingency	396	441	0.06626	-	STLN-DEMARC6 - SWEETWATER 230KV CKT 1
FDNSLock-Blown up	06ALL	0	15G	G14_046		Non-Converged Contingency	319	351	0.05978	-	MOORE COUNTY INTERCHANGE - POTTER COUNTY INTERCHANGE 230KV CKT 1
FDNSLock-Blown up	06ALL	0	15G	G14_046		Non-Converged Contingency	319	351	0.05978	-	MOORE COUNTY INTERCHANGE - POTTER COUNTY INTERCHANGE 230KV CKT 1
FDNSLock-Blown up	06ALL	0	15G	G14_046		Non-Converged Contingency	1413	1517	0.05866	-	BUCKNER7 345.00 - SPEARVILLE 345KV CKT 1
FDNSLock-Blown up	06ALL	0	15G	G14_046		Non-Converged Contingency	319	351	0.05856	-	GRAPEVINE INTERCHANGE - NICHOLS STATION 230KV CKT 1
FDNSLock-Blown up	06ALL	0	15G	G14_046		Non-Converged Contingency	439	439	0.05843	-	CHISHOLM6 230.00 - ELK CITY 230KV 230KV CKT 1
FDNSLock-Blown up	06ALL	0	15G	G14_046		Non-Converged Contingency	287	316	0.05843	-	ELK CITY 230KV (ELKCTY-6) 230/138/13.8KV TRANSFORMER CKT 1
FDNSLock-Blown up	06ALL	0	15G	G14_046		Non-Converged Contingency	96	96	0.05068	-	CARGILL SUB - DEAF SMITH REC-#24 115KV CKT 1
FDNSLock-Blown up	06ALL	0	15G	G14_046		Non-Converged Contingency	96	96	0.05068	-	CURRY COUNTY INTERCHANGE - DEAF SMITH REC-#20 115KV CKT 1
FDNSLock-Blown up	06ALL	0	15G	G14_046		Non-Converged Contingency	96	96	0.05068	-	DEAF SMITH REC-#20 - PARMER COUNTY SUB 115KV CKT 1
FDNSLock-Blown up	06ALL	0	15G	G14_046		Non-Converged Contingency	96	96	0.05068	-	DEAF SMITH REC-#24 - PARMER COUNTY SUB 115KV CKT 1
FDNSLock-Blown up	06ALL	0	15G	G14_046		Non-Converged Contingency	319	351	0.04802	-	CARLISLE INTERCHANGE - TUCO INTERCHANGE 230KV CKT 1
FDNSLock-Blown up	06ALL	0	15G	G14_046		Non-Converged Contingency	319	351	0.0465	-	G13_027T 230.00 - TOLK STATION WEST 230KV CKT 1
FDNSLock-Blown up	06ALL	0	15G	G14_046		Non-Converged Contingency	0	0	0.04016	-	SPP-SWPS-V49
FDNSLock-Blown up	06ALL	0	15G	G14_046		Non-Converged Contingency	276	304	0.03483	-	BAILEY COUNTY INTERCHANGE - G15-018T 115.00 115KV CKT 1
FDNSLock-Blown up	06ALL	0	15G	G14_046		Non-Converged Contingency	0	0	0.03483	-	SPP-SWPS-V12
FDNSLock-Blown up	06ALL	0	15SP	G14_046		Non-Converged Contingency	0	0	0.33697	-	SPSCONT-02X
FDNSLock-Blown up	06ALL	0	15SP	G14_046		Non-Converged Contingency	956	994	0.19304	-	G14-074T 345.00 - OKLAUNION 345KV CKT 1
FDNSLock-Blown up	06ALL	0	15SP	G14_046		Non-Converged Contingency	956	994	0.19304	-	G14-074T 345.00 - TUCO INTERCHANGE 345KV CKT 1
FDNSLock-Blown up	06ALL	0	15SP	G14_046		Non-Converged Contingency	956	1052	0.16848	-	G14_038T 345.00 - Hitchland Interchange 345KV CKT 1
FDNSLock-Blown up	06ALL	0	15SP	G14_046		Non-Converged Contingency	1420	1775	0.14902	-	BORDER 7345.00 - TUCO_2 345.00 345KV CKT 1
FDNSLock-Blown up	06ALL	0	15SP	G14_046		Non-Converged Contingency	1420	1775	0.14902	-	BORDER 7345.00 - TUCO_2 345.00 345KV CKT 2
FDNSLock-Blown up	06ALL	0	15SP	G14_046		Non-Converged Contingency	478	478	0.14124	-	G14-068T 230.00 - PLANT X STATION 230KV CKT 1
FDNSLock-Blown up	06ALL	0	15WP	G14_046		Non-Converged Contingency	1033	1071	0.19813	-	G14-074T 345.00 - OKLAUNION 345KV CKT 1
FDNSLock-Blown up	06ALL	0	20SP	G14_046		Non-Converged Contingency	956	994	0.26225	-	G14-074T 345.00 - OKLAUNION 345KV CKT 1
FDNSLock-Blown up	06ALL	0	20WP	G14_046		Non-Converged Contingency	0	0	0.32532	-	SPSCONT-02X
FDNSLock-Blown up	06ALL	0	20WP	G14_046		Non-Converged Contingency	1033	1071	0.25924	-	G14-074T 345.00 - OKLAUNION 345KV CKT 1
FDNSLock-Blown up	06ALL	0	20WP	G14_046		Non-Converged Contingency	1033	1071	0.25924	-	G14-074T 345.00 - TUCO INTERCHANGE 345KV CKT 1
FDNSLock-Blown up	06ALL	0	20WP	G14_046		Non-Converged Contingency	1420	1775	0.19791	-	BORDER 7345.00 - TUCO_2 345.00 345KV CKT 1
FDNSLock-Blown up	06ALL	0	20WP	G14_046		Non-Converged Contingency	1792	1792	0.19791	-	BORDER 7345.00 - WOODWARD DISTRICT EHV 345KV CKT 1
FDNSLock-Blown up	06ALL	0	20WP	G14_046		Non-Converged Contingency	956	1052	0.16266	-	G14_038T 345.00 - Hitchland Interchange 345KV CKT 1
FDNSLock-Blown up	06ALL	2	15G	G14_046		Non-Converged Contingency	0	0	0.29992	-	SPSCONT-02X
FDNSLock-Blown up	06ALL	2	15G	G14_046		Non-Converged Contingency	956	994	0.19956	-	G14-074T 345.00 - OKLAUNION 345KV CKT 1
FDNSLock-Blown up	06ALL	2	15G	G14_046		Non-Converged Contingency	956	994	0.19956	-	G14-074T 345.00 - TUCO INTERCHANGE 345KV CKT 1
FDNSLock-Blown up	06ALL	2	15G	G14_046		Non-Converged Contingency	1420	1775	0.15787	-	BORDER 7345.00 - TUCO_2 345.00 345KV CKT 1
FDNSLock-Blown up	06ALL	2	15G	G14_046		Non-Converged Contingency	1420	1775	0.15787	-	BORDER 7345.00 - TUCO_2 345.00 345KV CKT 2
FDNSLock-Blown up	06ALL	2	15G	G14_046		Non-Converged Contingency	956	1052	0.14996	-	G14_038T 345.00 - Hitchland Interchange 345KV CKT 1
FDNSLock-Blown up	06ALL	2	15G	G14_046		Non-Converged Contingency	956	1052	0.14996	-	G14_038T 345.00 - POTTER COUNTY INTERCHANGE 345KV CKT 1
FDNSLock-Blown up	06ALL	2	15G	G14_046		Non-Converged Contingency	560	560	0.14996	-	POTTER COUNTY INTERCHANGE (WAUK 90343-A) 345/230/13.2KV TRANSFORMER CKT 1
FDNSLock-Blown up	06ALL	2	15SP	G14_046		Non-Converged Contingency	956	994	0.20529	-	G14-074T 345.00 - OKLAUNION 345KV CKT 1
FDNSLock-Blown up	06ALL	2	15WP	G14_046		Non-Converged Contingency	1033	1071	0.21041	-	G14-074T 345.00 - OKLAUNION 345KV CKT 1
FDNSLock-Blown up	06ALL	3	15G	G14_046		Non-Converged Contingency	0	0	0.42956	-	SPSCONT-02X
FDNSLock-Blown up	06ALL	3	15G	G14_046		Non-Converged Contingency	956	1052	0.21478	-	G14_038T 345.00 - Hitchland Interchange 345KV CKT 1
FDNSLock-Blown up	06ALL	3	15G	G14_046		Non-Converged Contingency	956	1052	0.21478	-	G14_038T 345.00 - POTTER COUNTY INTERCHANGE 345KV CKT 1
FDNSLock-Blown up	06ALL	3	15G	G14_046		Non-Converged Contingency	956	994	0.17778	-	G14-074T 345.00 - OKLAUNION 345KV CKT 1
FDNS	06ALL	0	15G	G14_046	TO->FROM	AMOCO SWITCHING STATION - YOAKUM COUNTY INTERCHANGE 230KV CKT 1	319	351	0.20032	105.2484	OASIS INTERCHANGE - SAN JUAN MESA TAP 230KV CKT 1
FDNS	06ALL	0	15G	G14_046	TO->FROM	AMOCO SWITCHING STATION - YOAKUM COUNTY INTERCHANGE 230KV CKT 1	319	351	0.13108	104.8902	BASE CASE
FDNS	06NR	0	15G	G14_046	TO->FROM	AMOCO SWITCHING STATION - YOAKUM COUNTY INTERCHANGE 230KV CKT 1	319	351	0.03132	103.6651	G13_027T 230.00 - TOLK STATION WEST 230KV CKT 1
FDNS	06NR	0	15G	G14_046	TO->FROM	AMOCO SWITCHING STATION - YOAKUM COUNTY INTERCHANGE 230KV CKT 1	319	351	0.0907	101.118	CROSSROADS 345.00 - TOLK STATION 345KV CKT 1
FDNS	06NR	0	15G	G14_046	TO->FROM	AMOCO SWITCHING STATION - YOAKUM COUNTY INTERCHANGE 230KV CKT 1	319	351	0.0907	100.8639	TOLK STATION (ABBXNL844501) 345/230/13.2KV TRANSFORMER CKT 1
FDNS	06ALL	0	15SP	G14_046	TO->FROM	AMOCO SWITCHING STATION - YOAKUM COUNTY INTERCHANGE 230KV CKT 1	319	351	0.2041	100	CROSSROADS 345.00 - TOLK STATION 345KV CKT 1
FDNS	06ALL	0	15SP	G14_046	TO->FROM	AMOCO SWITCHING STATION - YOAKUM COUNTY INTERCHANGE 230KV CKT 1	319	351	0.2041	100	TOLK STATION (ABBXNL844501) 345/230/13.2KV TRANSFORMER CKT 1
FDNS	06NR	0	15G	G14_046	FROM->TO	BUSHLAND INTERCHANGE - HILLSIDE 115KV CKT 1	159	160	0.05465	107.93	BUSHLAND INTERCHANGE - POTTER COUNTY INTERCHANGE 230KV CKT 1
FDNS	06NR	0	15G	G14_046	FROM->TO	BUSHLAND INTERCHANGE (WH 7001795) 230/115/13.2KV TRANSFORMER CKT 1	168	168	0.05465	107.6681	BUSHLAND INTERCHANGE - POTTER COUNTY INTERCHANGE 230KV CKT 1
FDNS	06NR	0	15G	G14_046	FROM->TO	BUSHLAND INTERCHANGE (WH 7001795) 230/115/13.2KV TRANSFORMER CKT 1	168	168	0.05465	105.1644	BUSHLAND INTERCHANGE - POTTER COUNTY INTERCHANGE 230KV CKT 1
FDNS	00NR	0	15WP	G14_046	FROM->TO	BUSHLAND INTERCHANGE (WH 7001795) 230/115/13.2KV TRANSFORMER CKT 1	168	168	0.05105	103.7121	BUSHLAND INTERCHANGE - POTTER COUNTY INTERCHANGE 230KV CKT 1
FDNS	00NR	0	15WP	G14_046	FROM->TO	BUSHLAND INTERCHANGE (WH 7001795) 230/115/13.2KV TRANSFORMER CKT 1	168	168	0.05105	101.6436	BUSHLAND INTERCHANGE - POTTER COUNTY INTERCHANGE 230KV CKT 1
FDNS	06NR	0	15G	G14_046	TO->FROM	CANYON E_TP3115.00 - CANYON WEST SUB 115KV CKT 1	96	96	0.0476	109.4993	BUSHLAND INTERCHANGE - DEAF SMITH COUNTY INTERCHANGE 230KV CKT 1
FDNS	06NR	0	15G	G14_046	FROM->TO	CANYON E_TP3115.00 - OSAGE SWITCHING STATION 115KV CKT 1	96	96	0.0476	99.5	BUSHLAND INTERCHANGE - DEAF SMITH COUNTY INTERCHANGE 230KV CKT 1
FDNS	06NR	0	15G	G14_046	TO->FROM	CANYON WEST SUB - DAWN SUB 115KV CKT 1	96	96	0.0476	120.1946	BUSHLAND INTERCHANGE - DEAF SMITH COUNTY INTERCHANGE 230KV CKT 1
FDNS	06NR	0	15G	G14_046	TO->FROM	CARGILL SUB - DEAF SMITH REC-#24 115KV CKT 1	96	96	0.05096	134.6418	DEAF SMITH COUNTY INTERCHANGE - G14-068T 230.00 230KV CKT 1
FDNS	06NR	0	15G	G14_046	TO->FROM	CARGILL SUB - DEAF SMITH REC-#24 115KV CKT 1	96	96	0.05096	128.943	G14-068T 230.00 - PLANT X STATION 230KV CKT 1
FDNS	06ALL	0	15G	G14_046	TO->FROM	CARGILL SUB - DEAF SMITH REC-#24 115KV CKT 1	96	96	0.05068	105.5446	BASE CASE
FDNS	06ALL	0	15SP	G14_046	TO->FROM	CARGILL SUB - DEAF SMITH REC-#24 115KV CKT 1	96	96	0.0509	101.5046	BASE CASE
FDNS	06NR	0	15G	G14_046	FROM->TO	CARGILL SUB - FRIONA SUB 115KV CKT 1	96	96	0.05096	128.3771	DEAF SMITH COUNTY INTERCHANGE - G14-068T 230.00 230KV CKT 1
FDNS	06NR	0	15G	G14_046	FROM->TO	CARGILL SUB - FRIONA SUB 115KV CKT 1	96	96	0.05096	123.2237	G14-068T 230.00 - PLANT X STATION 230KV CKT 1
FDNS	06NR	0	15G	G14_046	TO->FROM	CARLISLE INTERCHANGE - LP-DOUD_TP 3115.00 115KV CKT 1	159	160	0.06001	120.5692	LUBBOCK SOUTH INTERCHANGE - WOLFFORTH INTERCHANGE 230KV CKT 1
FDNS	00NR	0	25SP	G14_046	TO->FROM	CARLSBAD INTERCHANGE - PECOS INTERCHANGE 115KV CKT 1	141	141	0.07315	122.4836	HOBBS - KIOWA 7345.00 345KV CKT 1
FDNS	00NR	0	15SP	G14_046	FROM->TO	CHAVES COUNTY INTERCHANGE - SAMSON SUB 115KV CKT 1	120	154	0.17073	103.4785	CHAVES COUNTY INTERCHANGE - URTON SUB 115KV CKT 1
FDNS	00NR	0	15SP	G14_046	FROM->TO	CHAVES COUNTY INTERCHANGE - URTON SUB 115KV CKT 1	159	160	0.17036	100.6073	CHAVES COUNTY INTERCHANGE - SAMSON SUB 115KV CKT 1
FDNS	06NR	0	15G	G14_046	TO->FROM	COULTER INTERCHANGE - HILLSIDE 115KV CKT 1	139	160	0.05465	99.7	BUSHLAND INTERCHANGE - POTTER COUNTY INTERCHANGE 230KV CKT 1
FDNS	06NR	0	15G	G14_046	FROM->TO	CURRY COUNTY INTERCHANGE - DEAF SMITH REC-#20 115KV CKT 1	96	96	0.05096	158.0448	DEAF SMITH COUNTY INTERCHANGE - G14-068T 230.00 230KV CKT 1
FDNS	06NR	0	15G	G14_046	FROM->TO	CURRY COUNTY INTERCHANGE - DEAF SMITH REC-#20 115KV CKT 1	96	96	0.05096	152.3417	G14-068T 230.00 - PLANT X STATION 230KV CKT 1
FDNS	06ALL	0	15SP	G14_046	FROM->TO	CURRY COUNTY INTERCHANGE - DEAF SMITH REC-#20 115KV CKT 1	96	96	0.0509	134.4755	BASE CASE

SOLUTION	GROUP	SCENARIO	SEASON	SOURCE	DIRECTION	MONITORED ELEMENT	RATEA (MVA)	RATEB(MVA)	TDF	TC%LOADING (% MVA)	CONTINGENCY
FDNS	06ALL	0	15G	G14_046	FROM->TO	CURRY COUNTY INTERCHANGE - DEAF SMITH REC-#20 115KV CKT 1	96	96	0.05068	128.1788	BASE CASE
FDNS	06ALL	0	20SP	G14_046	FROM->TO	CURRY COUNTY INTERCHANGE - DEAF SMITH REC-#20 115KV CKT 1	96	96	0.04694	125.174	BASE CASE
FDNS	06NR	0	15G	G14_046	FROM->TO	CURRY COUNTY INTERCHANGE - DEAF SMITH REC-#20 115KV CKT 1	96	96	0.04292	121.432	NEWHART 230 - PLANT X STATION 230KV CKT 1
FDNS	06NR	0	15G	G14_046	FROM->TO	CURRY COUNTY INTERCHANGE - DEAF SMITH REC-#20 115KV CKT 1	96	96	0.04198	120.6182	TOLK STATION EAST - TUCO INTERCHANGE 230KV CKT 1
FDNS	06NR	0	15G	G14_046	FROM->TO	CURRY COUNTY INTERCHANGE - DEAF SMITH REC-#20 115KV CKT 1	96	96	0.05027	119.6093	G15-010T 230.00 - TOLK STATION EAST 230KV CKT 1
FDNS	00NR	0	15SP	G14_046	FROM->TO	CURRY COUNTY INTERCHANGE - DEAF SMITH REC-#20 115KV CKT 1	96	96	0.046	119.5246	DEAF SMITH COUNTY INTERCHANGE - G14-068T 230.00 230KV CKT 1
FDNS	06NR	0	15G	G14_046	FROM->TO	CURRY COUNTY INTERCHANGE - DEAF SMITH REC-#20 115KV CKT 1	96	96	0.04321	119.0311	BAILEY COUNTY INTERCHANGE - G15-018T 115.00 115KV CKT 1
FDNS	06ALL	0	25SP	G14_046	FROM->TO	CURRY COUNTY INTERCHANGE - DEAF SMITH REC-#20 115KV CKT 1	96	96	0.04711	117.7445	BASE CASE
FDNS	06NR	0	15G	G14_046	FROM->TO	CURRY COUNTY INTERCHANGE - DEAF SMITH REC-#20 115KV CKT 1	96	96	0.05007	117.405	ROOSEVELT COUNTY INTERCHANGE - TOLK STATION WEST 230KV CKT 2
FDNS	06NR	0	15G	G14_046	FROM->TO	CURRY COUNTY INTERCHANGE - DEAF SMITH REC-#20 115KV CKT 1	96	96	0.03922	117.1182	G14-074T 345.00 - TUCO INTERCHANGE 345KV CKT 1
FDNS	06NR	0	15G	G14_046	FROM->TO	CURRY COUNTY INTERCHANGE - DEAF SMITH REC-#20 115KV CKT 1	96	96	0.04321	117.1086	SPP-SWPS-V12
FDNS	06NR	0	15G	G14_046	FROM->TO	CURRY COUNTY INTERCHANGE - DEAF SMITH REC-#20 115KV CKT 1	96	96	0.03909	116.7506	SPSCONT-02X
FDNS	06NR	0	15G	G14_046	FROM->TO	CURRY COUNTY INTERCHANGE - DEAF SMITH REC-#20 115KV CKT 1	96	96	0.03919	114.4342	BORDER 7345.00 - TUCO_2 345.00 345KV CKT 1
FDNS	06NR	0	15G	G14_046	FROM->TO	CURRY COUNTY INTERCHANGE - DEAF SMITH REC-#20 115KV CKT 1	96	96	0.03919	114.4342	BORDER 7345.00 - TUCO_2 345.00 345KV CKT 2
FDNS	06NR	0	15G	G14_046	FROM->TO	CURRY COUNTY INTERCHANGE - DEAF SMITH REC-#20 115KV CKT 1	96	96	0.04086	111.599	NEWHART 230 - POTTER COUNTY INTERCHANGE 230KV CKT 1
FDNS	06NR	0	15G	G14_046	FROM->TO	CURRY COUNTY INTERCHANGE - DEAF SMITH REC-#20 115KV CKT 1	96	96	0.04029	111.4901	SUNDOWN INTERCHANGE - WOLFFORTH INTERCHANGE 230KV CKT 1
FDNS	06NR	0	15G	G14_046	FROM->TO	CURRY COUNTY INTERCHANGE - DEAF SMITH REC-#20 115KV CKT 1	96	96	0.03935	110.6717	AMOCO SWITCHING STATION - YOAKUM COUNTY INTERCHANGE 230KV CKT 1
FDNS	06NR	0	15G	G14_046	FROM->TO	CURRY COUNTY INTERCHANGE - DEAF SMITH REC-#20 115KV CKT 1	96	96	0.04251	110.4275	CROSSROADS 345.00 - TOLK STATION 345KV CKT 1
FDNS	06NR	0	15G	G14_046	FROM->TO	CURRY COUNTY INTERCHANGE - DEAF SMITH REC-#20 115KV CKT 1	96	96	0.04017	110.4054	LUBBOCK SOUTH INTERCHANGE - WOLFFORTH INTERCHANGE 230KV CKT 1
FDNS	06NR	0	15G	G14_046	FROM->TO	CURRY COUNTY INTERCHANGE - DEAF SMITH REC-#20 115KV CKT 1	96	96	0.04251	109.8497	TOLK STATION (ABBXNL844501) 345/230/13.2KV TRANSFORMER CKT 1
FDNS	06NR	0	15G	G14_046	FROM->TO	CURRY COUNTY INTERCHANGE - DEAF SMITH REC-#20 115KV CKT 1	96	96	0.04321	109.5583	BAILEY COUNTY INTERCHANGE - PLANT X STATION 115KV CKT 1
FDNS	06NR	0	15G	G14_046	FROM->TO	CURRY COUNTY INTERCHANGE - DEAF SMITH REC-#20 115KV CKT 1	96	96	0.04057	109.27	AMARILLO SOUTH INTERCHANGE - SWISHER COUNTY INTERCHANGE 230KV CKT 1
FDNS	06NR	0	15G	G14_046	FROM->TO	CURRY COUNTY INTERCHANGE - DEAF SMITH REC-#20 115KV CKT 1	96	96	0.05672	109.1986	CHAVES COUNTY INTERCHANGE - EDDY_NORTH 6230.00 230KV CKT 1
FDNS	06NR	0	15G	G14_046	FROM->TO	CURRY COUNTY INTERCHANGE - DEAF SMITH REC-#20 115KV CKT 1	96	96	0.04038	109.0375	SPP-SWPS-26
FDNS	06NR	0	15G	G14_046	FROM->TO	CURRY COUNTY INTERCHANGE - DEAF SMITH REC-#20 115KV CKT 1	96	96	0.03892	105.6076	BASE CASE
FDNS	06NR	0	15G	G14_046	FROM->TO	CURRY COUNTY INTERCHANGE - DEAF SMITH REC-#20 115KV CKT 1	96	96	0.03892	102.2048	GEN526331 1-JONES GEN #1 22 KV
FDNS	06NR	0	15G	G14_046	FROM->TO	CURRY COUNTY INTERCHANGE - DEAF SMITH REC-#20 115KV CKT 1	96	96	0.03892	102.0509	GEN562688 1-G15_014_3 0.6900
FDNS	06NR	0	15G	G14_046	FROM->TO	CURRY COUNTY INTERCHANGE - DEAF SMITH REC-#20 115KV CKT 1	96	96	0.03667	101.9803	CANYON E_TP3115.00 - CANYON WEST SUB 115KV CKT 1
FDNS	06NR	0	15G	G14_046	FROM->TO	CURRY COUNTY INTERCHANGE - DEAF SMITH REC-#20 115KV CKT 1	96	96	0.03892	101.9492	GEN562627 1-ASGI14_002_30.8200
FDNS	06NR	0	15G	G14_046	FROM->TO	CURRY COUNTY INTERCHANGE - DEAF SMITH REC-#20 115KV CKT 1	96	96	0.03892	101.9231	SPP-SWPS-T77
FDNS	06NR	0	15G	G14_046	FROM->TO	CURRY COUNTY INTERCHANGE - DEAF SMITH REC-#20 115KV CKT 1	96	96	0.03892	101.7622	GEN527162 1-MUSTANG GEN #2
FDNS	06NR	0	15G	G14_046	FROM->TO	CURRY COUNTY INTERCHANGE - DEAF SMITH REC-#20 115KV CKT 1	96	96	0.03892	101.7619	GEN527161 1-MUSTANG GEN #1
FDNS	06NR	0	15G	G14_046	FROM->TO	CURRY COUNTY INTERCHANGE - DEAF SMITH REC-#20 115KV CKT 1	96	96	0.03892	101.6284	GEN562739 1-G14_065_3 0.4050
FDNS	06NR	0	15G	G14_046	FROM->TO	CURRY COUNTY INTERCHANGE - DEAF SMITH REC-#20 115KV CKT 1	96	96	0.03892	101.5103	GEN562483 1-G13_027_3 0.6900
FDNS	06NR	0	15G	G14_046	FROM->TO	CURRY COUNTY INTERCHANGE - DEAF SMITH REC-#20 115KV CKT 1	96	96	0.03761	101.306	CURRY COUNTY INTERCHANGE - ROOSEVELT COUNTY INTERCHANGE 115KV CKT 2
FDNS	06NR	0	15G	G14_046	FROM->TO	CURRY COUNTY INTERCHANGE - DEAF SMITH REC-#20 115KV CKT 1	96	96	0.03885	101.0655	ROOSEVELT COUNTY INTERCHANGE (ABB LMM60042) 230/115/13.2KV TRANSFORMER CKT 1
FDNS	06NR	0	15G	G14_046	FROM->TO	CURRY COUNTY INTERCHANGE - DEAF SMITH REC-#20 115KV CKT 1	96	96	0.03667	101.0017	CANYON WEST SUB - DAWN SUB 115KV CKT 1
FDNS	06NR	0	15G	G14_046	FROM->TO	CURRY COUNTY INTERCHANGE - DEAF SMITH REC-#20 115KV CKT 1	96	96	0.03892	100.9916	GEN527163 1-MUSTANG GEN #3 22 KV
FDNS	06NR	0	15G	G14_046	FROM->TO	CURRY COUNTY INTERCHANGE - DEAF SMITH REC-#20 115KV CKT 1	96	96	0.03667	100.7951	DAWN SUB - Panda Energy Substation Hereford 115KV CKT 1
FDNS	06NR	0	15G	G14_046	FROM->TO	CURRY COUNTY INTERCHANGE - DEAF SMITH REC-#20 115KV CKT 1	96	96	0.03892	100.4586	GEN527901 1-HOBBS PLANT #1 (CT)
FDNS	06NR	0	15G	G14_046	FROM->TO	CURRY COUNTY INTERCHANGE - DEAF SMITH REC-#20 115KV CKT 1	96	96	0.03892	100.4586	GEN527902 1-HOBBS PLANT #2 (CT)
FDNS	06NR	0	15G	G14_046	FROM->TO	CURRY COUNTY INTERCHANGE - DEAF SMITH REC-#20 115KV CKT 1	96	96	0.03892	100.4275	GEN527882 1-CUNNINGHAM GEN #2 20 KV
FDNS	06NR	0	15G	G14_046	FROM->TO	CURRY COUNTY INTERCHANGE - DEAF SMITH REC-#20 115KV CKT 1	96	96	0.03667	100.3849	DEAF SMITH COUNTY INTERCHANGE - Panda Energy Substation Hereford 115KV CKT 1
FDNS	06NR	0	15G	G14_046	FROM->TO	CURRY COUNTY INTERCHANGE - DEAF SMITH REC-#20 115KV CKT 1	96	96	0.03892	99.9	GEN527166 1-MUSTANG_6 118.000
FDNS	06NR	0	15G	G14_046	FROM->TO	CURRY COUNTY INTERCHANGE - DEAF SMITH REC-#20 115KV CKT 1	96	96	0.03667	99.9	SPP-SWPS-W40
FDNS	06NR	0	15G	G14_046	FROM->TO	CURRY COUNTY INTERCHANGE - DEAF SMITH REC-#20 115KV CKT 1	96	96	0.03732	99.8	PLEASANT HILL (LIKE POTTER) 230/115/13.2KV TRANSFORMER CKT 1
FDNS	06NR	0	15G	G14_046	FROM->TO	CURRY COUNTY INTERCHANGE - DEAF SMITH REC-#20 115KV CKT 1	96	96	0.03892	99.6	GEN524485 1-CAPROCK WIND GEN
FDNS	06NR	0	15G	G14_046	TO->FROM	DAWN SUB - Panda Energy Substation Hereford 115KV CKT 1	96	96	0.0476	123.2022	BUSHLAND INTERCHANGE - DEAF SMITH COUNTY INTERCHANGE 230KV CKT 1
FDNS	06NR	0	15G	G14_046	FROM->TO	DEAF SMITH COUNTY INTERCHANGE - Panda Energy Substation Hereford 115KV CKT 1	96	96	0.0476	127.828	BUSHLAND INTERCHANGE - DEAF SMITH COUNTY INTERCHANGE 230KV CKT 1
FDNS	00NR	0	15WP	G14_046	FROM->TO	DEAF SMITH COUNTY INTERCHANGE - Panda Energy Substation Hereford 115KV CKT 1	106	106	0.04307	102.4385	BUSHLAND INTERCHANGE - DEAF SMITH COUNTY INTERCHANGE 230KV CKT 1
FDNS	06NR	0	15G	G14_046	FROM->TO	DEAF SMITH REC-#20 - PARMER COUNTY SUB 115KV CKT 1	96	96	0.05096	148.9958	DEAF SMITH COUNTY INTERCHANGE - G14-068T 230.00 230KV CKT 1
FDNS	06NR	0	15G	G14_046	FROM->TO	DEAF SMITH REC-#20 - PARMER COUNTY SUB 115KV CKT 1	96	96	0.05096	143.5446	G14-068T 230.00 - PLANT X STATION 230KV CKT 1
FDNS	06ALL	0	15SP	G14_046	FROM->TO	DEAF SMITH REC-#20 - PARMER COUNTY SUB 115KV CKT 1	96	96	0.0509	121.3248	BASE CASE
FDNS	06ALL	0	15G	G14_046	FROM->TO	DEAF SMITH REC-#20 - PARMER COUNTY SUB 115KV CKT 1	96	96	0.05068	119.1935	BASE CASE
FDNS	06NR	0	15G	G14_046	FROM->TO	DEAF SMITH REC-#20 - PARMER COUNTY SUB 115KV CKT 1	96	96	0.04292	112.7744	NEWHART 230 - PLANT X STATION 230KV CKT 1
FDNS	06NR	0	15G	G14_046	FROM->TO	DEAF SMITH REC-#20 - PARMER COUNTY SUB 115KV CKT 1	96	96	0.04198	111.9526	TOLK STATION EAST - TUCO INTERCHANGE 230KV CKT 1
FDNS	06NR	0	15G	G14_046	FROM->TO	DEAF SMITH REC-#20 - PARMER COUNTY SUB 115KV CKT 1	96	96	0.05027	111.1	G15-010T 230.00 - TOLK STATION EAST 230KV CKT 1
FDNS	06NR	0	15G	G14_046	FROM->TO	DEAF SMITH REC-#20 - PARMER COUNTY SUB 115KV CKT 1	96	96	0.04321	110.5194	BAILEY COUNTY INTERCHANGE - G15-018T 115.00 115KV CKT 1
FDNS	06ALL	0	20SP	G14_046	FROM->TO	DEAF SMITH REC-#20 - PARMER COUNTY SUB 115KV CKT 1	96	96	0.04694	109.5934	BASE CASE
FDNS	06NR	0	15G	G14_046	FROM->TO	DEAF SMITH REC-#20 - PARMER COUNTY SUB 115KV CKT 1	96	96	0.05007	108.9085	ROOSEVELT COUNTY INTERCHANGE - TOLK STATION WEST 230KV CKT 2
FDNS	06NR	0	15G	G14_046	FROM->TO	DEAF SMITH REC-#20 - PARMER COUNTY SUB 115KV CKT 1	96	96	0.04321	108.6277	SPP-SWPS-V12
FDNS	06NR	0	15G	G14_046	FROM->TO	DEAF SMITH REC-#20 - PARMER COUNTY SUB 115KV CKT 1	96	96	0.03922	108.4589	G14-074T 345.00 - TUCO INTERCHANGE 345KV CKT 1
FDNS	06NR	0	15G	G14_046	FROM->TO	DEAF SMITH REC-#20 - PARMER COUNTY SUB 115KV CKT 1	96	96	0.03909	108.0382	SPSCONT-02X
FDNS	00NR	0	15SP	G14_046	FROM->TO	DEAF SMITH REC-#20 - PARMER COUNTY SUB 115KV CKT 1	96	96	0.046	106.3825	DEAF SMITH COUNTY INTERCHANGE - G14-068T 230.00 230KV CKT 1
FDNS	06NR	0	15G	G14_046	FROM->TO	DEAF SMITH REC-#20 - PARMER COUNTY SUB 115KV CKT 1	96	96	0.03919	105.838	BORDER 7345.00 - TUCO_2 345.00 345KV CKT 1
FDNS	06NR	0	15G	G14_046	FROM->TO	DEAF SMITH REC-#20 - PARMER COUNTY SUB 115KV CKT 1	96	96	0.03919	105.838	BORDER 7345.00 - TUCO_2 345.00 345KV CKT 2
FDNS	06NR	0	15G	G14_046	FROM->TO	DEAF SMITH REC-#20 - PARMER COUNTY SUB 115KV CKT 1	96	96	0.04086	103.0578	NEWHART 230 - POTTER COUNTY INTERCHANGE 230KV CKT 1
FDNS	06NR	0	15G	G14_046	FROM->TO	DEAF SMITH REC-#20 - PARMER COUNTY SUB 115KV CKT 1	96	96	0.04029	102.949	SUNDOWN INTERCHANGE - WOLFFORTH INTERCHANGE 230KV CKT 1
FDNS	06NR	0	15G	G14_046	FROM->TO	DEAF SMITH REC-#20 - PARMER COUNTY SUB 115KV CKT 1	96	96	0.03935	102.143	AMOCO SWITCHING STATION - YOAKUM COUNTY INTERCHANGE 230KV CKT 1
FDNS	06NR	0	15G	G14_046	FROM->TO	DEAF SMITH REC-#20 - PARMER COUNTY SUB 115KV CKT 1	96	96	0.04251	101.9467	CROSSROADS 345.00 - TOLK STATION 345KV CKT 1
FDNS	06NR	0	15G	G14_046	FROM->TO	DEAF SMITH REC-#20 - PARMER COUNTY SUB 115KV CKT 1	96	96	0.04017	101.8692	LUBBOCK SOUTH INTERCHANGE - WOLFFORTH INTERCHANGE 230KV CKT 1
FDNS	06NR	0	15G	G14_046	FROM->TO	DEAF SMITH REC-#20 - PARMER COUNTY SUB 115KV CKT 1	96	96	0.04251	101.395	TOLK STATION (ABBXNL844501) 345/230/13.2KV TRANSFORMER CKT 1
FDNS	06NR	0	15G	G14_046	FROM->TO	DEAF SMITH REC-#20 - PARMER COUNTY SUB 115KV CKT 1	96	96	0.04321	101.1106	BAILEY COUNTY INTERCHANGE - PLANT X STATION 115KV CKT 1
FDNS	06NR	0	15G	G14_046	FROM->TO	DEAF SMITH REC-#20 - PARMER COUNTY SUB 115KV CKT 1	96	96	0.04057	100.7702	AMARILLO SOUTH INTERCHANGE - SWISHER COUNTY INTERCHANGE 230KV CKT 1
FDNS	06NR	0	15G	G14_046	FROM->TO	DEAF SMITH REC-#20 - PARMER COUNTY SUB 115KV CKT 1	96	96	0.05672	100.7402	CHAVES COUNTY INTERCHANGE - EDDY_NORTH 6230.00 230KV CKT 1

SOLUTION	GROUP	SCENARIO	SEASON	SOURCE	DIRECTION	MONITORED ELEMENT	RATEA (MVA)	RATEB(MVA)	TDF	TC%LOADING (% MVA)	CONTINGENCY
FDNS	06NR	0	15G	G14_046	FROM->TO	DEAF SMITH REC-#20 - PARMER COUNTY SUB 115KV CKT 1	96	96	0.04038	100.6094	SPP-SWPS-26
FDNS	06NR	0	15G	G14_046	TO->FROM	DEAF SMITH REC-#24 - PARMER COUNTY SUB 115KV CKT 1	96	96	0.05096	142.8032	DEAF SMITH COUNTY INTERCHANGE - G14-068T 230.00 230KV CKT 1
FDNS	06NR	0	15G	G14_046	TO->FROM	DEAF SMITH REC-#24 - PARMER COUNTY SUB 115KV CKT 1	96	96	0.05096	136.8345	G14-068T 230.00 - PLANT X STATION 230KV CKT 1
FDNS	06ALL	0	15G	G14_046	TO->FROM	DEAF SMITH REC-#24 - PARMER COUNTY SUB 115KV CKT 1	96	96	0.05068	113.7704	BASE CASE
FDNS	06ALL	0	15SP	G14_046	TO->FROM	DEAF SMITH REC-#24 - PARMER COUNTY SUB 115KV CKT 1	96	96	0.0509	113.2753	BASE CASE
FDNS	06NR	0	15G	G14_046	TO->FROM	DEAF SMITH REC-#24 - PARMER COUNTY SUB 115KV CKT 1	96	96	0.04292	106.3615	NEWHART 230 - PLANT X STATION 230KV CKT 1
FDNS	06NR	0	15G	G14_046	TO->FROM	DEAF SMITH REC-#24 - PARMER COUNTY SUB 115KV CKT 1	96	96	0.04198	105.5455	TOLK STATION EAST - TUCO INTERCHANGE 230KV CKT 1
FDNS	06NR	0	15G	G14_046	TO->FROM	DEAF SMITH REC-#24 - PARMER COUNTY SUB 115KV CKT 1	96	96	0.05027	104.3826	G15-010T 230.00 - TOLK STATION EAST 230KV CKT 1
FDNS	06NR	0	15G	G14_046	TO->FROM	DEAF SMITH REC-#24 - PARMER COUNTY SUB 115KV CKT 1	96	96	0.04321	103.8939	BAILEY COUNTY INTERCHANGE - G15-018T 115.00 115KV CKT 1
FDNS	06NR	0	15G	G14_046	TO->FROM	DEAF SMITH REC-#24 - PARMER COUNTY SUB 115KV CKT 1	96	96	0.05007	102.2276	ROOSEVELT COUNTY INTERCHANGE - TOLK STATION WEST 230KV CKT 2
FDNS	06NR	0	15G	G14_046	TO->FROM	DEAF SMITH REC-#24 - PARMER COUNTY SUB 115KV CKT 1	96	96	0.03922	102.1105	G14-074T 345.00 - TUCO INTERCHANGE 345KV CKT 1
FDNS	06NR	0	15G	G14_046	TO->FROM	DEAF SMITH REC-#24 - PARMER COUNTY SUB 115KV CKT 1	96	96	0.04321	102.016	SPP-SWPS-V12
FDNS	06NR	0	15G	G14_046	TO->FROM	DEAF SMITH REC-#24 - PARMER COUNTY SUB 115KV CKT 1	96	96	0.03909	101.5978	SPSCONT-02X
FDNS	06ALL	0	20SP	G14_046	TO->FROM	DEAF SMITH REC-#24 - PARMER COUNTY SUB 115KV CKT 1	96	96	0.04694	101.2457	BASE CASE
FDNS	06NR	0	15G	G14_046	TO->FROM	DEAF SMITH REC-#6 - FRIONA SUB 115KV CKT 1	96	96	0.05096	116.908	DEAF SMITH COUNTY INTERCHANGE - G14-068T 230.00 230KV CKT 1
FDNS	06NR	0	15G	G14_046	TO->FROM	DEAF SMITH REC-#6 - FRIONA SUB 115KV CKT 1	96	96	0.05096	112.256	G14-068T 230.00 - PLANT X STATION 230KV CKT 1
FDNS	06NR	0	15G	G14_046	FROM->TO	DEAF SMITH REC-#6 - HEREFORD INTERCHANGE 115KV CKT 1	96	96	0.05096	113.989	DEAF SMITH COUNTY INTERCHANGE - G14-068T 230.00 230KV CKT 1
FDNS	06NR	0	15G	G14_046	FROM->TO	DEAF SMITH REC-#6 - HEREFORD INTERCHANGE 115KV CKT 1	96	96	0.05096	109.5336	G14-068T 230.00 - PLANT X STATION 230KV CKT 1
FDNS	06ALL	0	15SP	G14_046	FROM->TO	ELK CITY 230KV (ELKCTY-6) 230/138/13.8KV TRANSFORMER CKT 1	272	316	0.06347	125.7575	BASE CASE
FDNS	06ALL	0	15SP	G14_046	FROM->TO	ELK CITY 230KV (ELKCTY-6) 230/138/13.8KV TRANSFORMER CKT 1	272	316	0.06347	124.0328	BASE CASE
FDNS	06ALL	0	15G	G14_046	FROM->TO	ELK CITY 230KV (ELKCTY-6) 230/138/13.8KV TRANSFORMER CKT 1	287	316	0.05843	112.017	BASE CASE
FDNS	06ALL	0	15G	G14_046	FROM->TO	ELK CITY 230KV (ELKCTY-6) 230/138/13.8KV TRANSFORMER CKT 1	287	316	0.05843	110.2834	BASE CASE
FDNS	06ALL	0	15WP	G14_046	FROM->TO	ELK CITY 230KV (ELKCTY-6) 230/138/13.8KV TRANSFORMER CKT 1	287	316	0.06529	107.7723	BASE CASE
FDNS	06ALL	0	15WP	G14_046	FROM->TO	ELK CITY 230KV (ELKCTY-6) 230/138/13.8KV TRANSFORMER CKT 1	287	316	0.06529	106.4302	BASE CASE
FDNS	06ALL	0	20WP	G14_046	TO->FROM	GRAPEVINE INTERCHANGE - NICHOLS STATION 230KV CKT 1	329	361	0.08248	121.1428	BASE CASE
FDNS	06ALL	0	15G	G14_046	TO->FROM	GRAPEVINE INTERCHANGE - NICHOLS STATION 230KV CKT 1	319	351	0.05856	105.2692	BASE CASE
FDNS	06ALL	0	20SP	G14_046	TO->FROM	GRAPEVINE INTERCHANGE - NICHOLS STATION 230KV CKT 1	319	351	0.08435	99.5	BASE CASE
FDNS	06NR	0	15G	G14_046	TO->FROM	LP-DOUD_TP 3115.00 - SP-WOLF_TP 3115.00 115KV CKT 1	159	175	0.06001	119.0494	LUBBOCK SOUTH INTERCHANGE - WOLFFORTH INTERCHANGE 230KV CKT 1
FDNS	06ALL	0	15SP	G14_046	TO->FROM	LUBBOCK SOUTH INTERCHANGE - WOLFFORTH INTERCHANGE 230KV CKT 1	319	351	0.2207	115.1095	TOLK STATION EAST - TUCO INTERCHANGE 230KV CKT 1
FDNS	06NR	0	15G	G14_046	TO->FROM	LUBBOCK SOUTH INTERCHANGE - WOLFFORTH INTERCHANGE 230KV CKT 1	319	351	0.12383	110.3247	TOLK STATION EAST - TUCO INTERCHANGE 230KV CKT 1
FDNS	06ALL	0	15G	G14_046	TO->FROM	LUBBOCK SOUTH INTERCHANGE - WOLFFORTH INTERCHANGE 230KV CKT 1	319	351	0.20705	100.9916	SP-WOLF_TP 3115.00 - YUMA INTERCHANGE 115KV CKT 1
FDNS	06ALL	0	15SP	G14_046	TO->FROM	LUBBOCK SOUTH INTERCHANGE - WOLFFORTH INTERCHANGE 230KV CKT 1	319	351	0.21066	99.9	WOLFFORTH INTERCHANGE - YUMA INTERCHANGE 115KV CKT 1
FDNS	06ALL	0	15SP	G14_046	TO->FROM	NEWHART 230 - PLANT X STATION 230KV CKT 1	478	502	0.23724	131.4399	DEAF SMITH COUNTY INTERCHANGE - G14-068T 230.00 230KV CKT 1
FDNS	06ALL	0	15SP	G14_046	TO->FROM	NEWHART 230 - PLANT X STATION 230KV CKT 1	478	502	0.25	125.803	TOLK STATION EAST - TUCO INTERCHANGE 230KV CKT 1
FDNS	06ALL	0	15SP	G14_046	TO->FROM	NEWHART 230 - PLANT X STATION 230KV CKT 1	478	502	0.23431	112.8584	BUSHLAND INTERCHANGE - DEAF SMITH COUNTY INTERCHANGE 230KV CKT 1
FDNS	06ALL	0	15SP	G14_046	TO->FROM	NEWHART 230 - PLANT X STATION 230KV CKT 1	478	502	0.21932	105.469	SUNDOWN INTERCHANGE - WOLFFORTH INTERCHANGE 230KV CKT 1
FDNS	06ALL	0	15SP	G14_046	TO->FROM	NEWHART 230 - PLANT X STATION 230KV CKT 1	478	502	0.20168	104.6456	PLANT X STATION (WH ALM20171) 230/115/13.2KV TRANSFORMER CKT 1
FDNS	06ALL	0	15SP	G14_046	TO->FROM	NEWHART 230 - PLANT X STATION 230KV CKT 1	478	502	0.21327	102.0972	BUSHLAND INTERCHANGE - POTTER COUNTY INTERCHANGE 230KV CKT 1
FDNS	06ALL	0	15SP	G14_046	TO->FROM	NEWHART 230 - PLANT X STATION 230KV CKT 1	478	502	0.21387	101.3263	LUBBOCK SOUTH INTERCHANGE - WOLFFORTH INTERCHANGE 230KV CKT 1
FDNS	06ALL	0	20SP	G14_046	TO->FROM	NEWHART 230 - PLANT X STATION 230KV CKT 1	478	502	0.20074	100	DEAF SMITH COUNTY INTERCHANGE - G14-068T 230.00 230KV CKT 1
FDNS	06ALL	0	20SP	G14_046	TO->FROM	NEWHART 230 - PLANT X STATION 230KV CKT 1	478	502	0.20074	100	G14-068T 230.00 - PLANT X STATION 230KV CKT 1
FDNS	06NR	0	15G	G14_046	TO->FROM	PLANT X STATION - TOLK STATION EAST 230KV CKT 2	478	502	0.13209	117.4765	TOLK STATION TAP - TOLK STATION WEST 230KV CKT @1
FDNS	06NR	0	15G	G14_046	TO->FROM	SP-WOLF_TP 3115.00 - YUMA INTERCHANGE 115KV CKT 1	159	175	0.06001	126.3201	LUBBOCK SOUTH INTERCHANGE - WOLFFORTH INTERCHANGE 230KV CKT 1
FDNS	06ALL	0	15SP	G14_046	FROM->TO	SUNDOWN INTERCHANGE - WOLFFORTH INTERCHANGE 230KV CKT 1	319	351	0.22234	127.2931	TOLK STATION EAST - TUCO INTERCHANGE 230KV CKT 1
FDNS	06NR	0	15G	G14_046	FROM->TO	SUNDOWN INTERCHANGE - WOLFFORTH INTERCHANGE 230KV CKT 1	319	351	0.11958	116.2358	TOLK STATION EAST - TUCO INTERCHANGE 230KV CKT 1
FDNS	06ALL	0	15G	G14_046	FROM->TO	SUNDOWN INTERCHANGE - WOLFFORTH INTERCHANGE 230KV CKT 1	319	351	0.20091	104.1935	TERRY COUNTY INTERCHANGE - WOLFFORTH INTERCHANGE 115KV CKT 1
FDNS	06ALL	0	15SP	G14_046	FROM->TO	SUNDOWN INTERCHANGE - WOLFFORTH INTERCHANGE 230KV CKT 1	319	351	0.20436	100.5801	TERRY COUNTY INTERCHANGE - WOLFFORTH INTERCHANGE 115KV CKT 1
FDNS	06NR	0	15G	G14_046	FROM->TO	TERRY COUNTY INTERCHANGE - WOLFFORTH INTERCHANGE 115KV CKT 1	120	154	0.05155	126.6551	SUNDOWN INTERCHANGE - WOLFFORTH INTERCHANGE 230KV CKT 1
FDNS	06ALL	0	15G	G14_046	FROM->TO	TERRY COUNTY INTERCHANGE - WOLFFORTH INTERCHANGE 115KV CKT 1	120	154	0.07174	108.5207	BASE CASE
FDNS	06NR	0	15G	G14_046	FROM->TO	TERRY COUNTY INTERCHANGE - WOLFFORTH INTERCHANGE 115KV CKT 1	120	154	0.0309	103.1804	AMOCO SWITCHING STATION - YOAKUM COUNTY INTERCHANGE 230KV CKT 1
FDNS	06NR	0	15G	G14_046	FROM->TO	TERRY COUNTY INTERCHANGE - WOLFFORTH INTERCHANGE 115KV CKT 1	120	154	0.03487	102.2814	TOLK STATION EAST - TUCO INTERCHANGE 230KV CKT 1
FDNS	06ALL	0	15SP	G14_046	FROM->TO	TOLK STATION EAST - TUCO INTERCHANGE 230KV CKT 1	478	502	0.25855	117.9185	NEWHART 230 - PLANT X STATION 230KV CKT 1
FDNS	06ALL	0	15SP	G14_046	FROM->TO	TOLK STATION EAST - TUCO INTERCHANGE 230KV CKT 1	478	502	0.23622	110.5721	DEAF SMITH COUNTY INTERCHANGE - G14-068T 230.00 230KV CKT 1
FDNS	06ALL	0	15SP	G14_046	FROM->TO	TOLK STATION EAST - TUCO INTERCHANGE 230KV CKT 1	478	502	0.25909	108.8842	SUNDOWN INTERCHANGE - WOLFFORTH INTERCHANGE 230KV CKT 1
FDNS	06ALL	0	15SP	G14_046	FROM->TO	TOLK STATION EAST - TUCO INTERCHANGE 230KV CKT 1	478	502	0.25087	102.2896	LUBBOCK SOUTH INTERCHANGE - WOLFFORTH INTERCHANGE 230KV CKT 1
FDNS	06ALL	0	15SP	G14_046	FROM->TO	TOLK STATION EAST - TUCO INTERCHANGE 230KV CKT 1	478	502	0.24011	102.1725	BUSHLAND INTERCHANGE - DEAF SMITH COUNTY INTERCHANGE 230KV CKT 1
FDNS	06NR	0	15G	G14_046	FROM->TO	TOLK STATION EAST - TUCO INTERCHANGE 230KV CKT 1	478	502	0.13449	101.7543	NEWHART 230 - PLANT X STATION 230KV CKT 1
FDNS	06NR	0	15G	G14_046	FROM->TO	TOLK STATION EAST - TUCO INTERCHANGE 230KV CKT 1	478	502	0.10519	99.9	SPSCONT-02X
FDNS	06NR	0	15G	G14_046	FROM->TO	TOLK STATION TAP - TOLK STATION WEST 230KV CKT @1	478	610	0.13772	121.5622	TOLK STATION EAST - TUCO INTERCHANGE 230KV CKT 1
FDNS	06NR	0	15G	G14_046	FROM->TO	TOLK STATION TAP - TOLK STATION WEST 230KV CKT @1	478	610	0.14512	113.3713	PLANT X STATION - TOLK STATION EAST 230KV CKT 2
FDNS	06ALL	0	15SP	G14_046	FROM->TO	TUCO INTERCHANGE - TUCO_2 230.00 230KV CKT 1	478	502	0.24026	171.3069	TUCO INTERCHANGE - TUCO_2 345.00 345KV CKT 1
FDNS	06NR	0	15G	G14_046	FROM->TO	TUCO INTERCHANGE - TUCO_2 230.00 230KV CKT 1	478	502	0.05145	141.1746	TUCO INTERCHANGE - TUCO_2 345.00 345KV CKT 1
FDNS	06ALL	0	15WP	G14_046	FROM->TO	TUCO INTERCHANGE - TUCO_2 230.00 230KV CKT 1	557	557	0.24687	134.3573	TUCO INTERCHANGE - TUCO_2 345.00 345KV CKT 1
FDNS	06ALL	0	15SP	G14_046	FROM->TO	TUCO INTERCHANGE - TUCO_2 230.00 230KV CKT 1	478	502	0.20342	117.2904	TUCO INTERCHANGE (GE M1022338) 345/230/13.2KV TRANSFORMER CKT 1
FDNS	06NR	0	15G	G14_046	FROM->TO	TUCO INTERCHANGE - TUCO_2 230.00 230KV CKT 1	478	502	0.04061	111.7725	TUCO INTERCHANGE (GE M1022338) 345/230/13.2KV TRANSFORMER CKT 1
FDNS	06ALL	0	15WP	G14_046	FROM->TO	TUCO INTERCHANGE - TUCO_2 230.00 230KV CKT 1	557	557	0.20916	104.677	TUCO INTERCHANGE (GE M1022338) 345/230/13.2KV TRANSFORMER CKT 1
FDNS	06NR	0	15G	G14_046	FROM->TO	TUCO INTERCHANGE - TUCO_2 230.00 230KV CKT 1	478	502	0.03836	103.588	TUCO INTERCHANGE (SIEM 8743066) 345/230/13.2KV TRANSFORMER CKT 2
FDNS	06ALL	0	20SP	G14_046	FROM->TO	TUCO INTERCHANGE - TUCO_2 230.00 230KV CKT 1	478	502	0.21784	101.2947	TUCO INTERCHANGE - TUCO_2 345.00 345KV CKT 1
FDNS	06ALL	0	15WP	G14_046	FROM->TO	TUCO INTERCHANGE (GE M1022338) 345/230/13.2KV TRANSFORMER CKT 1	560	560	0.26849	123.6189	TUCO INTERCHANGE (SIEM 8743066) 345/230/13.2KV TRANSFORMER CKT 2
FDNS	06ALL	0	15WP	G14_046	FROM->TO	TUCO INTERCHANGE (GE M1022338) 345/230/13.2KV TRANSFORMER CKT 1	560	560	0.26849	121.7966	TUCO INTERCHANGE (SIEM 8743066) 345/230/13.2KV TRANSFORMER CKT 2
FDNS	06NR	0	15G	G14_046	FROM->TO	TUCO INTERCHANGE (GE M1022338) 345/230/13.2KV TRANSFORMER CKT 1	560	560	0.03882	120.8599	TUCO INTERCHANGE (SIEM 8743066) 345/230/13.2KV TRANSFORMER CKT 2
FDNS	06ALL	0	15WP	G14_046	FROM->TO	TUCO INTERCHANGE (GE M1022338) 345/230/13.2KV TRANSFORMER CKT 1	560	560	0.2628	120.4848	TUCO_2 345.00 (TUCO_2 XFMR) 345/230/13.2KV TRANSFORMER CKT 1
FDNS	06NR	0	15G	G14_046	FROM->TO	TUCO INTERCHANGE (GE M1022338) 345/230/13.2KV TRANSFORMER CKT 1	560	560	0.03882	119.1697	TUCO INTERCHANGE (SIEM 8743066) 345/230/13.2KV TRANSFORMER CKT 2
FDNS	06ALL	0	15WP	G14_046	FROM->TO	TUCO INTERCHANGE (GE M1022338) 345/230/13.2KV TRANSFORMER CKT 1	560	560	0.2628	118.8811	TUCO_2 345.00 (TUCO_2 XFMR) 345/230/13.2KV TRANSFORMER CKT 1
FDNS	06NR	0	15G	G14_046	FROM->TO	TUCO INTERCHANGE (GE M1022338) 345/230/13.2KV TRANSFORMER CKT 1	560	560	0.03695	117.9266	TUCO_2 345.00 (TUCO_2 XFMR) 345/230/13.2KV TRANSFORMER CKT 1

SOLUTION	GROUP	SCENARIO	SEASON	SOURCE	DIRECTION	MONITORED ELEMENT	RATEA (MVA)	RATEB(MVA)	TDF	TC%LOADING (% MVA)	CONTINGENCY
FDNS	06NR	0	15G	G14_046	FROM->TO	TUCO INTERCHANGE (GE M1022338) 345/230/13.2KV TRANSFORMER CKT 1	560	560	0.03695	116.4942	TUCO_2 345.00 (TUCO_2 XFMR) 345/230/13.2KV TRANSFORMER CKT 1
FDNS	06ALL	0	15SP	G14_046	FROM->TO	TUCO INTERCHANGE (GE M1022338) 345/230/13.2KV TRANSFORMER CKT 1	560	560	0.26173	113.3311	TUCO INTERCHANGE (SIEM 8743066) 345/230/13.2KV TRANSFORMER CKT 2
FDNS	06ALL	0	15WP	G14_046	FROM->TO	TUCO INTERCHANGE (GE M1022338) 345/230/13.2KV TRANSFORMER CKT 1	560	560	0.23952	112.9697	TUCO INTERCHANGE - TUCO_2 230.00 230KV CKT 1
FDNS	06ALL	0	15WP	G14_046	FROM->TO	TUCO INTERCHANGE (GE M1022338) 345/230/13.2KV TRANSFORMER CKT 1	560	560	0.23952	111.3776	TUCO INTERCHANGE - TUCO_2 230.00 230KV CKT 1
FDNS	06ALL	0	15SP	G14_046	FROM->TO	TUCO INTERCHANGE (GE M1022338) 345/230/13.2KV TRANSFORMER CKT 1	560	560	0.26173	111.3719	TUCO INTERCHANGE (SIEM 8743066) 345/230/13.2KV TRANSFORMER CKT 2
FDNS	06ALL	0	15SP	G14_046	FROM->TO	TUCO INTERCHANGE (GE M1022338) 345/230/13.2KV TRANSFORMER CKT 1	560	560	0.25624	110.0342	TUCO_2 345.00 (TUCO_2 XFMR) 345/230/13.2KV TRANSFORMER CKT 1
FDNS	06NR	0	15G	G14_046	FROM->TO	TUCO INTERCHANGE (GE M1022338) 345/230/13.2KV TRANSFORMER CKT 1	560	560	0.03926	109.7142	TUCO INTERCHANGE - TUCO_2 230.00 230KV CKT 1
FDNS	06ALL	0	15SP	G14_046	FROM->TO	TUCO INTERCHANGE (GE M1022338) 345/230/13.2KV TRANSFORMER CKT 1	560	560	0.25624	108.332	TUCO_2 345.00 (TUCO_2 XFMR) 345/230/13.2KV TRANSFORMER CKT 1
FDNS	06NR	0	15G	G14_046	FROM->TO	TUCO INTERCHANGE (GE M1022338) 345/230/13.2KV TRANSFORMER CKT 1	560	560	0.03926	108.1973	TUCO INTERCHANGE - TUCO_2 230.00 230KV CKT 1
FDNS	06ALL	0	15SP	G14_046	FROM->TO	TUCO INTERCHANGE (GE M1022338) 345/230/13.2KV TRANSFORMER CKT 1	560	560	0.23328	107.9073	TUCO INTERCHANGE - TUCO_2 230.00 230KV CKT 1
FDNS	06ALL	0	15SP	G14_046	FROM->TO	TUCO INTERCHANGE (GE M1022338) 345/230/13.2KV TRANSFORMER CKT 1	560	560	0.23328	105.9346	TUCO INTERCHANGE - TUCO_2 230.00 230KV CKT 1
FDNS	06ALL	0	15SP	G14_046	FROM->TO	TUCO_2 345.00 (TUCO_2 XFMR) 345/230/13.2KV TRANSFORMER CKT 1	560	560	0.27471	145.8188	TUCO INTERCHANGE - TUCO_2 345.00 345KV CKT 1
FDNS	06ALL	0	15SP	G14_046	FROM->TO	TUCO_2 345.00 (TUCO_2 XFMR) 345/230/13.2KV TRANSFORMER CKT 1	560	560	0.27471	142.7342	TUCO INTERCHANGE - TUCO_2 345.00 345KV CKT 1
FDNS	06ALL	0	15WP	G14_046	FROM->TO	TUCO_2 345.00 (TUCO_2 XFMR) 345/230/13.2KV TRANSFORMER CKT 1	560	560	0.28161	138.8622	TUCO INTERCHANGE - TUCO_2 345.00 345KV CKT 1
FDNS	06ALL	0	15WP	G14_046	FROM->TO	TUCO_2 345.00 (TUCO_2 XFMR) 345/230/13.2KV TRANSFORMER CKT 1	560	560	0.28161	136.3817	TUCO INTERCHANGE - TUCO_2 345.00 345KV CKT 1
FDNS	06NR	0	15G	G14_046	FROM->TO	TUCO_2 345.00 (TUCO_2 XFMR) 345/230/13.2KV TRANSFORMER CKT 1	560	560	0.04399	133.953	TUCO INTERCHANGE - TUCO_2 345.00 345KV CKT 1
FDNS	06NR	0	15G	G14_046	FROM->TO	TUCO_2 345.00 (TUCO_2 XFMR) 345/230/13.2KV TRANSFORMER CKT 1	560	560	0.04399	132.4001	TUCO INTERCHANGE - TUCO_2 345.00 345KV CKT 1
FDNS	06ALL	0	15WP	G14_046	FROM->TO	TUCO_2 345.00 (TUCO_2 XFMR) 345/230/13.2KV TRANSFORMER CKT 1	560	560	0.24148	109.7547	TUCO INTERCHANGE (GE M1022338) 345/230/13.2KV TRANSFORMER CKT 1
FDNS	06ALL	0	15WP	G14_046	FROM->TO	TUCO_2 345.00 (TUCO_2 XFMR) 345/230/13.2KV TRANSFORMER CKT 1	560	560	0.24148	108.6761	TUCO INTERCHANGE (GE M1022338) 345/230/13.2KV TRANSFORMER CKT 1
FDNS	06NR	0	15G	G14_046	FROM->TO	TUCO_2 345.00 (TUCO_2 XFMR) 345/230/13.2KV TRANSFORMER CKT 1	560	560	0.03279	107.6222	TUCO INTERCHANGE (GE M1022338) 345/230/13.2KV TRANSFORMER CKT 1
FDNS	06NR	0	15G	G14_046	FROM->TO	TUCO_2 345.00 (TUCO_2 XFMR) 345/230/13.2KV TRANSFORMER CKT 1	560	560	0.03279	106.6939	TUCO INTERCHANGE (GE M1022338) 345/230/13.2KV TRANSFORMER CKT 1
FDNS	06ALL	0	15WP	G14_046	FROM->TO	TUCO_2 345.00 (TUCO_2 XFMR) 345/230/13.2KV TRANSFORMER CKT 1	560	560	0.22628	102.7663	TUCO INTERCHANGE (SIEM 8743066) 345/230/13.2KV TRANSFORMER CKT 2
FDNS	06ALL	0	15WP	G14_046	FROM->TO	TUCO_2 345.00 (TUCO_2 XFMR) 345/230/13.2KV TRANSFORMER CKT 1	560	560	0.22628	101.7947	TUCO INTERCHANGE (SIEM 8743066) 345/230/13.2KV TRANSFORMER CKT 2
FDNS	06NR	0	15G	G14_046	FROM->TO	TUCO_2 345.00 (TUCO_2 XFMR) 345/230/13.2KV TRANSFORMER CKT 1	560	560	0.03059	100.8238	TUCO INTERCHANGE (SIEM 8743066) 345/230/13.2KV TRANSFORMER CKT 2
FDNS	06NR	0	15G	G14_046	FROM->TO	TUCO_2 345.00 (TUCO_2 XFMR) 345/230/13.2KV TRANSFORMER CKT 1	560	560	0.03059	100	TUCO INTERCHANGE (SIEM 8743066) 345/230/13.2KV TRANSFORMER CKT 2
FDNS	06ALL	0	15SP	G14_046	FROM->TO	TUCO_2 345.00 (TUCO_2 XFMR) 345/230/13.2KV TRANSFORMER CKT 1	560	560	0.23551	99.6	TUCO INTERCHANGE (GE M1022338) 345/230/13.2KV TRANSFORMER CKT 1
FDNS	06NR	0	15G	G14_046	FROM->TO	WOLFFORTH INTERCHANGE - YUMA INTERCHANGE 115KV CKT 1	218	239	0.06001	100.8035	LUBBOCK SOUTH INTERCHANGE - WOLFFORTH INTERCHANGE 230KV CKT 1
FDNS	06NR	2	15G	G14_046	TO->FROM	CARGILL SUB - DEAF SMITH REC-#24 115KV CKT 1	96	96	0.04777	113.1149	DEAF SMITH COUNTY INTERCHANGE - G14-068T 230.00 230KV CKT 1
FDNS	06NR	2	15G	G14_046	TO->FROM	CARGILL SUB - DEAF SMITH REC-#24 115KV CKT 1	96	96	0.04777	107.5918	G14-068T 230.00 - PLANT X STATION 230KV CKT 1
FDNS	06NR	2	15G	G14_046	FROM->TO	CARGILL SUB - FRIONA SUB 115KV CKT 1	96	96	0.04777	106.9074	DEAF SMITH COUNTY INTERCHANGE - G14-068T 230.00 230KV CKT 1
FDNS	06NR	2	15G	G14_046	FROM->TO	CARGILL SUB - FRIONA SUB 115KV CKT 1	96	96	0.04777	101.8144	G14-068T 230.00 - PLANT X STATION 230KV CKT 1
FDNS	00NR	2	25SP	G14_046	TO->FROM	CARLSBAD INTERCHANGE - PECOS INTERCHANGE 115KV CKT 1	141	141	0.07325	122.2341	HOBBS - KIOWA 7345.00 345KV CKT 1
FDNS	00NR	2	15SP	G14_046	FROM->TO	CHAVES COUNTY INTERCHANGE - SAMSON SUB 115KV CKT 1	120	154	0.17304	106.0354	CHAVES COUNTY INTERCHANGE - URTON SUB 115KV CKT 1
FDNS	00NR	2	15SP	G14_046	FROM->TO	CHAVES COUNTY INTERCHANGE - URTON SUB 115KV CKT 1	159	160	0.17267	103.0802	CHAVES COUNTY INTERCHANGE - SAMSON SUB 115KV CKT 1
FDNS	06NR	2	15G	G14_046	FROM->TO	CURRY COUNTY INTERCHANGE - DEAF SMITH REC-#20 115KV CKT 1	96	96	0.04777	136.0589	DEAF SMITH COUNTY INTERCHANGE - G14-068T 230.00 230KV CKT 1
FDNS	06NR	2	15G	G14_046	FROM->TO	CURRY COUNTY INTERCHANGE - DEAF SMITH REC-#20 115KV CKT 1	96	96	0.04777	130.5691	G14-068T 230.00 - PLANT X STATION 230KV CKT 1
FDNS	06ALL	2	15SP	G14_046	FROM->TO	CURRY COUNTY INTERCHANGE - DEAF SMITH REC-#20 115KV CKT 1	96	96	0.04543	123.9455	BASE CASE
FDNS	06ALL	2	20SP	G14_046	FROM->TO	CURRY COUNTY INTERCHANGE - DEAF SMITH REC-#20 115KV CKT 1	96	96	0.04433	116.2962	BASE CASE
FDNS	06ALL	2	25SP	G14_046	FROM->TO	CURRY COUNTY INTERCHANGE - DEAF SMITH REC-#20 115KV CKT 1	96	96	0.0445	112.3574	BASE CASE
FDNS	06NR	2	15G	G14_046	FROM->TO	CURRY COUNTY INTERCHANGE - DEAF SMITH REC-#20 115KV CKT 1	96	96	0.0373	109.8298	G14-074T 345.00 - OKLAUNION 345KV CKT 1
FDNS	06ALL	2	15G	G14_046	FROM->TO	CURRY COUNTY INTERCHANGE - DEAF SMITH REC-#20 115KV CKT 1	96	96	0.04545	107.9018	BASE CASE
FDNS	06NR	2	15G	G14_046	FROM->TO	CURRY COUNTY INTERCHANGE - DEAF SMITH REC-#20 115KV CKT 1	96	96	0.04783	107.8214	G15-010T 230.00 - TOLK STATION EAST 230KV CKT 1
FDNS	06NR	2	15G	G14_046	FROM->TO	CURRY COUNTY INTERCHANGE - DEAF SMITH REC-#20 115KV CKT 1	96	96	0.04096	106.9448	BAILEY COUNTY INTERCHANGE - G15-018T 115.00 115KV CKT 1
FDNS	06NR	2	15G	G14_046	FROM->TO	CURRY COUNTY INTERCHANGE - DEAF SMITH REC-#20 115KV CKT 1	96	96	0.04765	105.734	ROOSEVELT COUNTY INTERCHANGE - TOLK STATION WEST 230KV CKT 2
FDNS	06NR	2	15G	G14_046	FROM->TO	CURRY COUNTY INTERCHANGE - DEAF SMITH REC-#20 115KV CKT 1	96	96	0.04096	105.4678	SPP-SWPS-V12
FDNS	06NR	2	15G	G14_046	FROM->TO	CURRY COUNTY INTERCHANGE - DEAF SMITH REC-#20 115KV CKT 1	96	96	0.04014	105.0826	NEWHART 230 - PLANT X STATION 230KV CKT 1
FDNS	06NR	2	15G	G14_046	FROM->TO	CURRY COUNTY INTERCHANGE - DEAF SMITH REC-#20 115KV CKT 1	96	96	0.0373	104.5559	G14-074T 345.00 - TUCO INTERCHANGE 345KV CKT 1
FDNS	06NR	2	15G	G14_046	FROM->TO	CURRY COUNTY INTERCHANGE - DEAF SMITH REC-#20 115KV CKT 1	96	96	0.03834	104.4918	TUCO INTERCHANGE - YOAKUM_345 345.00 345KV CKT 1
FDNS	06NR	2	15G	G14_046	FROM->TO	CURRY COUNTY INTERCHANGE - DEAF SMITH REC-#20 115KV CKT 1	96	96	0.03726	103.3807	BORDER 7345.00 - TUCO_2 345.00 345KV CKT 1
FDNS	06NR	2	15G	G14_046	FROM->TO	CURRY COUNTY INTERCHANGE - DEAF SMITH REC-#20 115KV CKT 1	96	96	0.03726	103.3806	BORDER 7345.00 - TUCO_2 345.00 345KV CKT 2
FDNS	00NR	2	15SP	G14_046	FROM->TO	CURRY COUNTY INTERCHANGE - DEAF SMITH REC-#20 115KV CKT 1	96	96	0.04212	102.589	DEAF SMITH COUNTY INTERCHANGE - G14-068T 230.00 230KV CKT 1
FDNS	06NR	2	15G	G14_046	FROM->TO	CURRY COUNTY INTERCHANGE - DEAF SMITH REC-#20 115KV CKT 1	96	96	0.0388	101.8102	TOLK STATION EAST - TUCO INTERCHANGE 230KV CKT 1
FDNS	06NR	2	15G	G14_046	FROM->TO	CURRY COUNTY INTERCHANGE - DEAF SMITH REC-#20 115KV CKT 1	96	96	0.05614	100.0627	CHAVES COUNTY INTERCHANGE - EDDY_NORTH 6230.00 230KV CKT 1
FDNS	06NR	2	15G	G14_046	FROM->TO	CURRY COUNTY INTERCHANGE - DEAF SMITH REC-#20 115KV CKT 1	96	96	0.03872	99.6	NEWHART 230 - POTTER COUNTY INTERCHANGE 230KV CKT 1
FDNS	06NR	2	15G	G14_046	TO->FROM	DAWN SUB - Panda Energy Substation Hereford 115KV CKT 1	96	96	0.04424	100.6686	BUSHLAND INTERCHANGE - DEAF SMITH COUNTY INTERCHANGE 230KV CKT 1
FDNS	06NR	2	15G	G14_046	FROM->TO	DEAF SMITH COUNTY INTERCHANGE - Panda Energy Substation Hereford 115KV CKT 1	96	96	0.04424	105.2217	BUSHLAND INTERCHANGE - DEAF SMITH COUNTY INTERCHANGE 230KV CKT 1
FDNS	06NR	2	15G	G14_046	FROM->TO	DEAF SMITH REC-#20 - PARMER COUNTY SUB 115KV CKT 1	96	96	0.04777	127.3186	DEAF SMITH COUNTY INTERCHANGE - G14-068T 230.00 230KV CKT 1
FDNS	06NR	2	15G	G14_046	FROM->TO	DEAF SMITH REC-#20 - PARMER COUNTY SUB 115KV CKT 1	96	96	0.04777	122.0338	G14-068T 230.00 - PLANT X STATION 230KV CKT 1
FDNS	06ALL	2	15SP	G14_046	FROM->TO	DEAF SMITH REC-#20 - PARMER COUNTY SUB 115KV CKT 1	96	96	0.04543	111.0308	BASE CASE
FDNS	06NR	2	15G	G14_046	FROM->TO	DEAF SMITH REC-#20 - PARMER COUNTY SUB 115KV CKT 1	96	96	0.0373	101.2887	G14-074T 345.00 - OKLAUNION 345KV CKT 1
FDNS	06ALL	2	20SP	G14_046	FROM->TO	DEAF SMITH REC-#20 - PARMER COUNTY SUB 115KV CKT 1	96	96	0.04433	100.9761	BASE CASE
FDNS	06NR	2	15G	G14_046	TO->FROM	DEAF SMITH REC-#24 - PARMER COUNTY SUB 115KV CKT 1	96	96	0.04777	121.0419	DEAF SMITH COUNTY INTERCHANGE - G14-068T 230.00 230KV CKT 1
FDNS	06NR	2	15G	G14_046	TO->FROM	DEAF SMITH REC-#24 - PARMER COUNTY SUB 115KV CKT 1	96	96	0.04777	115.3182	G14-068T 230.00 - PLANT X STATION 230KV CKT 1
FDNS	06ALL	2	15SP	G14_046	TO->FROM	DEAF SMITH REC-#24 - PARMER COUNTY SUB 115KV CKT 1	96	96	0.04543	102.83	BASE CASE
FDNS	06ALL	2	15SP	G14_046	FROM->TO	ELK CITY 230KV (ELKCTY-6) 230/138/13.8KV TRANSFORMER CKT 1	272	316	0.06356	125.7818	BASE CASE
FDNS	06ALL	2	15SP	G14_046	FROM->TO	ELK CITY 230KV (ELKCTY-6) 230/138/13.8KV TRANSFORMER CKT 1	272	316	0.06356	124.4125	BASE CASE
FDNS	06ALL	2	15G	G14_046	FROM->TO	ELK CITY 230KV (ELKCTY-6) 230/138/13.8KV TRANSFORMER CKT 1	287	316	0.05904	111.2694	BASE CASE
FDNS	06ALL	2	15G	G14_046	FROM->TO	ELK CITY 230KV (ELKCTY-6) 230/138/13.8KV TRANSFORMER CKT 1	287	316	0.05904	110.3238	BASE CASE
FDNS	06ALL	2	15WP	G14_046	FROM->TO	ELK CITY 230KV (ELKCTY-6) 230/138/13.8KV TRANSFORMER CKT 1	287	316	0.06533	107.6385	BASE CASE
FDNS	06ALL	2	15WP	G14_046	FROM->TO	ELK CITY 230KV (ELKCTY-6) 230/138/13.8KV TRANSFORMER CKT 1	287	316	0.06533	106.6339	BASE CASE
FDNS	06ALL	2	20SP	G14_046	FROM->TO	ELK CITY 230KV (ELKCTY-6) 230/138/13.8KV TRANSFORMER CKT 1	272	316	0.06371	103.949	BASE CASE
FDNS	06ALL	2	20SP	G14_046	FROM->TO	ELK CITY 230KV (ELKCTY-6) 230/138/13.8KV TRANSFORMER CKT 1	272	316	0.06371	103.7414	BASE CASE
FDNS	06ALL	2	20WP	G14_046	FROM->TO	ELK CITY 230KV (ELKCTY-6) 230/138/13.8KV TRANSFORMER CKT 1	287	316	0.06295	101.967	BASE CASE
FDNS	06ALL	2	20WP	G14_046	FROM->TO	ELK CITY 230KV (ELKCTY-6) 230/138/13.8KV TRANSFORMER CKT 1	287	316	0.06295	101.2457	BASE CASE
FDNS	06NR	2	15G	G14_046	TO->FROM	PLANT X STATION - TOLK STATION EAST 230KV CKT 2	478	502	0.12479	112.0288	TOLK STATION TAP - TOLK STATION WEST 230KV CKT @1

SOLUTION	GROUP	SCENARIO	SEASON	SOURCE	DIRECTION	MONITORED ELEMENT	RATEA (MVA)	RATEB(MVA)	TDF	TC%LOADING (% MVA)	CONTINGENCY
FDNS	06NR	2	15G	G14_046	FROM->TO	TOLK STATION TAP - TOLK STATION WEST 230KV CKT @1	478	610	0.13816	109.214	PLANT X STATION - TOLK STATION EAST 230KV CKT 2
FDNS	06NR	2	15G	G14_046	FROM->TO	TOLK STATION TAP - TOLK STATION WEST 230KV CKT @1	478	610	0.12194	103.3226	TOLK STATION EAST - TUCO INTERCHANGE 230KV CKT 1
FDNS	06ALL	2	15G	G14_046	FROM->TO	TUCO INTERCHANGE - TUCO_2 230.00 230KV CKT 1	478	502	0.27742	200.4231	TUCO INTERCHANGE - TUCO_2 345.00 345KV CKT 1
FDNS	06ALL	2	15SP	G14_046	FROM->TO	TUCO INTERCHANGE - TUCO_2 230.00 230KV CKT 1	478	502	0.28423	183.8625	TUCO INTERCHANGE - TUCO_2 345.00 345KV CKT 1
FDNS	06NR	2	15G	G14_046	FROM->TO	TUCO INTERCHANGE - TUCO_2 230.00 230KV CKT 1	478	502	0.06513	155.2111	TUCO INTERCHANGE - TUCO_2 345.00 345KV CKT 1
FDNS	06ALL	2	15WP	G14_046	FROM->TO	TUCO INTERCHANGE - TUCO_2 230.00 230KV CKT 1	557	557	0.29136	142.2485	TUCO INTERCHANGE - TUCO_2 345.00 345KV CKT 1
FDNS	06ALL	2	20SP	G14_046	FROM->TO	TUCO INTERCHANGE - TUCO_2 230.00 230KV CKT 1	478	502	0.29158	137.8459	TUCO INTERCHANGE - TUCO_2 345.00 345KV CKT 1
FDNS	06ALL	2	15G	G14_046	FROM->TO	TUCO_2 345.00 (TUCO_2 XFMR) 345/230/13.2KV TRANSFORMER CKT 1	560	560	0.27755	167.6169	TUCO INTERCHANGE - TUCO_2 345.00 345KV CKT 1
FDNS	06ALL	2	15G	G14_046	FROM->TO	TUCO_2 345.00 (TUCO_2 XFMR) 345/230/13.2KV TRANSFORMER CKT 1	560	560	0.27755	164.2629	TUCO INTERCHANGE - TUCO_2 345.00 345KV CKT 1
FDNS	06ALL	2	15SP	G14_046	FROM->TO	TUCO_2 345.00 (TUCO_2 XFMR) 345/230/13.2KV TRANSFORMER CKT 1	560	560	0.28455	149.8147	TUCO INTERCHANGE - TUCO_2 345.00 345KV CKT 1
FDNS	06ALL	2	15SP	G14_046	FROM->TO	TUCO_2 345.00 (TUCO_2 XFMR) 345/230/13.2KV TRANSFORMER CKT 1	560	560	0.28455	147.216	TUCO INTERCHANGE - TUCO_2 345.00 345KV CKT 1
FDNS	06ALL	2	15WP	G14_046	FROM->TO	TUCO_2 345.00 (TUCO_2 XFMR) 345/230/13.2KV TRANSFORMER CKT 1	560	560	0.29126	141.8557	TUCO INTERCHANGE - TUCO_2 345.00 345KV CKT 1
FDNS	06ALL	2	15WP	G14_046	FROM->TO	TUCO_2 345.00 (TUCO_2 XFMR) 345/230/13.2KV TRANSFORMER CKT 1	560	560	0.29126	139.9334	TUCO INTERCHANGE - TUCO_2 345.00 345KV CKT 1
FDNS	06NR	2	15G	G14_046	FROM->TO	TUCO_2 345.00 (TUCO_2 XFMR) 345/230/13.2KV TRANSFORMER CKT 1	560	560	0.04679	137.5112	TUCO INTERCHANGE - TUCO_2 345.00 345KV CKT 1
FDNS	06NR	2	15G	G14_046	FROM->TO	TUCO_2 345.00 (TUCO_2 XFMR) 345/230/13.2KV TRANSFORMER CKT 1	560	560	0.04679	135.6134	TUCO INTERCHANGE - TUCO_2 345.00 345KV CKT 1
FDNS	06ALL	2	20SP	G14_046	FROM->TO	TUCO_2 345.00 (TUCO_2 XFMR) 345/230/13.2KV TRANSFORMER CKT 1	560	560	0.28643	112.3827	TUCO INTERCHANGE - TUCO_2 345.00 345KV CKT 1
FDNS	06ALL	2	20SP	G14_046	FROM->TO	TUCO_2 345.00 (TUCO_2 XFMR) 345/230/13.2KV TRANSFORMER CKT 1	560	560	0.28643	112.1069	TUCO INTERCHANGE - TUCO_2 345.00 345KV CKT 1
FDNS	00NR	3	25SP	G14_046	TO->FROM	CARLSBAD INTERCHANGE - PECOS INTERCHANGE 115KV CKT 1	141	141	0.07121	123.5617	HOBBS - KIOWA 7345.00 345KV CKT 1
FDNS	00NR	3	15SP	G14_046	FROM->TO	CHAVES COUNTY INTERCHANGE - SAMSON SUB 115KV CKT 1	120	154	0.17098	105.5543	CHAVES COUNTY INTERCHANGE - URTON SUB 115KV CKT 1
FDNS	00NR	3	15SP	G14_046	FROM->TO	CHAVES COUNTY INTERCHANGE - URTON SUB 115KV CKT 1	159	160	0.17061	102.6217	CHAVES COUNTY INTERCHANGE - SAMSON SUB 115KV CKT 1
FDNS	06ALL	3	15SP	G14_046	FROM->TO	ELK CITY 230KV (ELKCTY-6) 230/138/13.8KV TRANSFORMER CKT 1	272	316	0.06146	123.9727	BASE CASE
FDNS	06ALL	3	15SP	G14_046	FROM->TO	ELK CITY 230KV (ELKCTY-6) 230/138/13.8KV TRANSFORMER CKT 1	272	316	0.06146	122.7526	BASE CASE
FDNS	06ALL	3	15G	G14_046	FROM->TO	ELK CITY 230KV (ELKCTY-6) 230/138/13.8KV TRANSFORMER CKT 1	287	316	0.05695	109.3338	BASE CASE
FDNS	06ALL	3	15G	G14_046	FROM->TO	ELK CITY 230KV (ELKCTY-6) 230/138/13.8KV TRANSFORMER CKT 1	287	316	0.05695	108.4212	BASE CASE
FDNS	06ALL	3	15WP	G14_046	FROM->TO	ELK CITY 230KV (ELKCTY-6) 230/138/13.8KV TRANSFORMER CKT 1	287	316	0.06322	106.1239	BASE CASE
FDNS	06ALL	3	15WP	G14_046	FROM->TO	ELK CITY 230KV (ELKCTY-6) 230/138/13.8KV TRANSFORMER CKT 1	287	316	0.06322	105.1628	BASE CASE
FDNS	06ALL	3	20SP	G14_046	FROM->TO	ELK CITY 230KV (ELKCTY-6) 230/138/13.8KV TRANSFORMER CKT 1	272	316	0.06154	102.7547	BASE CASE
FDNS	06ALL	3	20SP	G14_046	FROM->TO	ELK CITY 230KV (ELKCTY-6) 230/138/13.8KV TRANSFORMER CKT 1	272	316	0.06154	102.5743	BASE CASE
FDNS	06ALL	3	20WP	G14_046	FROM->TO	ELK CITY 230KV (ELKCTY-6) 230/138/13.8KV TRANSFORMER CKT 1	287	316	0.06084	100.8598	BASE CASE
FDNS	06ALL	3	20WP	G14_046	FROM->TO	ELK CITY 230KV (ELKCTY-6) 230/138/13.8KV TRANSFORMER CKT 1	287	316	0.06084	100.2492	BASE CASE
FDNS	06ALL	3	15G	G14_046	TO->FROM	GRAPEVINE INTERCHANGE - NICHOLS STATION 230KV CKT 1	319	351	0.0584	100.925	BASE CASE
FDNS	06ALL	3	15G	G14_046	FROM->TO	TUCO INTERCHANGE - TUCO_2 230.00 230KV CKT 1	478	502	0.21958	168.7325	TUCO INTERCHANGE - TUCO_2 345.00 345KV CKT 1
FDNS	06ALL	3	15SP	G14_046	FROM->TO	TUCO INTERCHANGE - TUCO_2 230.00 230KV CKT 1	478	502	0.22581	154.1201	TUCO INTERCHANGE - TUCO_2 345.00 345KV CKT 1
FDNS	06ALL	3	15WP	G14_046	FROM->TO	TUCO INTERCHANGE - TUCO_2 230.00 230KV CKT 1	557	557	0.23221	120.7037	TUCO INTERCHANGE - TUCO_2 345.00 345KV CKT 1
FDNS	06ALL	3	20SP	G14_046	FROM->TO	TUCO INTERCHANGE - TUCO_2 230.00 230KV CKT 1	478	502	0.23349	118.0325	TUCO INTERCHANGE - TUCO_2 345.00 345KV CKT 1
FDNS	06ALL	3	20WP	G14_046	FROM->TO	TUCO INTERCHANGE - TUCO_2 230.00 230KV CKT 1	557	557	0.23141	111.9352	TUCO INTERCHANGE - TUCO_2 345.00 345KV CKT 1
FDNS	06ALL	3	15G	G14_046	FROM->TO	TUCO_2 345.00 (TUCO_2 XFMR) 345/230/13.2KV TRANSFORMER CKT 1	560	560	0.23655	151.8506	TUCO INTERCHANGE - TUCO_2 345.00 345KV CKT 1
FDNS	06ALL	3	15G	G14_046	FROM->TO	TUCO_2 345.00 (TUCO_2 XFMR) 345/230/13.2KV TRANSFORMER CKT 1	560	560	0.23655	149.0893	TUCO INTERCHANGE - TUCO_2 345.00 345KV CKT 1
FDNS	06ALL	3	15SP	G14_046	FROM->TO	TUCO_2 345.00 (TUCO_2 XFMR) 345/230/13.2KV TRANSFORMER CKT 1	560	560	0.24274	133.4173	TUCO INTERCHANGE - TUCO_2 345.00 345KV CKT 1
FDNS	06ALL	3	15SP	G14_046	FROM->TO	TUCO_2 345.00 (TUCO_2 XFMR) 345/230/13.2KV TRANSFORMER CKT 1	560	560	0.24274	131.8248	TUCO INTERCHANGE - TUCO_2 345.00 345KV CKT 1
FDNS	06ALL	3	15WP	G14_046	FROM->TO	TUCO_2 345.00 (TUCO_2 XFMR) 345/230/13.2KV TRANSFORMER CKT 1	560	560	0.24897	127.9846	TUCO INTERCHANGE - TUCO_2 345.00 345KV CKT 1
FDNS	06ALL	3	15WP	G14_046	FROM->TO	TUCO_2 345.00 (TUCO_2 XFMR) 345/230/13.2KV TRANSFORMER CKT 1	560	560	0.24897	126.6738	TUCO INTERCHANGE - TUCO_2 345.00 345KV CKT 1
FDNS	06ALL	3	20WP	G14_046	FROM->TO	TUCO_2 345.00 (TUCO_2 XFMR) 345/230/13.2KV TRANSFORMER CKT 1	560	560	0.24235	121.9391	TUCO INTERCHANGE - TUCO_2 345.00 345KV CKT 1
FDNS	06ALL	3	20WP	G14_046	FROM->TO	TUCO_2 345.00 (TUCO_2 XFMR) 345/230/13.2KV TRANSFORMER CKT 1	560	560	0.24235	121.0095	TUCO INTERCHANGE - TUCO_2 345.00 345KV CKT 1
FDNS	06ALL	3	20SP	G14_046	FROM->TO	TUCO_2 345.00 (TUCO_2 XFMR) 345/230/13.2KV TRANSFORMER CKT 1	560	560	0.24508	100.2304	TUCO INTERCHANGE - TUCO_2 345.00 345KV CKT 1
FDNS	06ALL	3	20SP	G14_046	FROM->TO	TUCO_2 345.00 (TUCO_2 XFMR) 345/230/13.2KV TRANSFORMER CKT 1	560	560	0.24508	100.1212	TUCO INTERCHANGE - TUCO_2 345.00 345KV CKT 1
FDNS	00NR	4	25SP	G14_046	TO->FROM	CARLSBAD INTERCHANGE - PECOS INTERCHANGE 115KV CKT 1	141	141	0.07118	123.5042	HOBBS - KIOWA 7345.00 345KV CKT 1
FDNS	00NR	4	15SP	G14_046	FROM->TO	CHAVES COUNTY INTERCHANGE - SAMSON SUB 115KV CKT 1	120	154	0.17096	105.2528	CHAVES COUNTY INTERCHANGE - URTON SUB 115KV CKT 1
FDNS	00NR	4	15SP	G14_046	FROM->TO	CHAVES COUNTY INTERCHANGE - URTON SUB 115KV CKT 1	159	160	0.17059	102.3313	CHAVES COUNTY INTERCHANGE - SAMSON SUB 115KV CKT 1
FDNS	06ALL	4	15SP	G14_046	FROM->TO	CHISHOLM6 230.00 - ELK CITY 230KV 230KV CKT 1	353	353	0.06676	100.9254	BASE CASE
FDNS	06ALL	4	15SP	G14_046	FROM->TO	ELK CITY 230KV (ELKCTY-6) 230/138/13.8KV TRANSFORMER CKT 1	272	316	0.06676	129.8441	BASE CASE
FDNS	06ALL	4	15SP	G14_046	FROM->TO	ELK CITY 230KV (ELKCTY-6) 230/138/13.8KV TRANSFORMER CKT 1	272	316	0.06676	128.5805	BASE CASE
FDNS	06ALL	4	15G	G14_046	FROM->TO	ELK CITY 230KV (ELKCTY-6) 230/138/13.8KV TRANSFORMER CKT 1	287	316	0.06242	116.3182	BASE CASE
FDNS	06ALL	4	15G	G14_046	FROM->TO	ELK CITY 230KV (ELKCTY-6) 230/138/13.8KV TRANSFORMER CKT 1	287	316	0.06242	115.4161	BASE CASE
FDNS	06ALL	4	15WP	G14_046	FROM->TO	ELK CITY 230KV (ELKCTY-6) 230/138/13.8KV TRANSFORMER CKT 1	287	316	0.06868	112.0283	BASE CASE
FDNS	06ALL	4	15WP	G14_046	FROM->TO	ELK CITY 230KV (ELKCTY-6) 230/138/13.8KV TRANSFORMER CKT 1	287	316	0.06868	111.0401	BASE CASE
FDNS	06ALL	4	20SP	G14_046	FROM->TO	ELK CITY 230KV (ELKCTY-6) 230/138/13.8KV TRANSFORMER CKT 1	272	316	0.06673	107.1637	BASE CASE
FDNS	06ALL	4	20SP	G14_046	FROM->TO	ELK CITY 230KV (ELKCTY-6) 230/138/13.8KV TRANSFORMER CKT 1	272	316	0.06673	106.9127	BASE CASE
FDNS	06ALL	4	20WP	G14_046	FROM->TO	ELK CITY 230KV (ELKCTY-6) 230/138/13.8KV TRANSFORMER CKT 1	287	316	0.06602	106.7868	BASE CASE
FDNS	06ALL	4	20WP	G14_046	FROM->TO	ELK CITY 230KV (ELKCTY-6) 230/138/13.8KV TRANSFORMER CKT 1	287	316	0.06602	106.1189	BASE CASE
FDNS	06ALL	4	15G	G14_046	FROM->TO	TUCO INTERCHANGE - TUCO_2 230.00 230KV CKT 1	478	502	0.20078	148.7289	TUCO INTERCHANGE - TUCO_2 345.00 345KV CKT 1
FDNS	06ALL	4	15SP	G14_046	FROM->TO	TUCO INTERCHANGE - TUCO_2 230.00 230KV CKT 1	478	502	0.20647	139.4418	TUCO INTERCHANGE - TUCO_2 345.00 345KV CKT 1
FDNS	06ALL	4	20SP	G14_046	FROM->TO	TUCO INTERCHANGE - TUCO_2 230.00 230KV CKT 1	478	502	0.21421	108.3093	TUCO INTERCHANGE - TUCO_2 345.00 345KV CKT 1
FDNS	06ALL	4	15WP	G14_046	FROM->TO	TUCO INTERCHANGE - TUCO_2 230.00 230KV CKT 1	557	557	0.21259	107.3541	TUCO INTERCHANGE - TUCO_2 345.00 345KV CKT 1
FDNS	06ALL	4	20WP	G14_046	FROM->TO	TUCO INTERCHANGE - TUCO_2 230.00 230KV CKT 1	557	557	0.21259	99.6	TUCO INTERCHANGE - TUCO_2 345.00 345KV CKT 1
FDNS	06ALL	4	15G	G14_046	FROM->TO	TUCO_2 345.00 (TUCO_2 XFMR) 345/230/13.2KV TRANSFORMER CKT 1	560	560	0.20442	127.7356	TUCO INTERCHANGE - TUCO_2 345.00 345KV CKT 1
FDNS	06ALL	4	15G	G14_046	FROM->TO	TUCO_2 345.00 (TUCO_2 XFMR) 345/230/13.2KV TRANSFORMER CKT 1	560	560	0.20442	126.397	TUCO INTERCHANGE - TUCO_2 345.00 345KV CKT 1
FDNS	06ALL	4	15SP	G14_046	FROM->TO	TUCO_2 345.00 (TUCO_2 XFMR) 345/230/13.2KV TRANSFORMER CKT 1	560	560	0.20996	114.1941	TUCO INTERCHANGE - TUCO_2 345.00 345KV CKT 1
FDNS	06ALL	4	15SP	G14_046	FROM->TO	TUCO_2 345.00 (TUCO_2 XFMR) 345/230/13.2KV TRANSFORMER CKT 1	560	560	0.20996	113.3239	TUCO INTERCHANGE - TUCO_2 345.00 345KV CKT 1
FDNS	06ALL	4	15WP	G14_046	FROM->TO	TUCO_2 345.00 (TUCO_2 XFMR) 345/230/13.2KV TRANSFORMER CKT 1	560	560	0.21566	108.1334	TUCO INTERCHANGE - TUCO_2 345.00 345KV CKT 1
FDNS	06ALL	4	15WP	G14_046	FROM->TO	TUCO_2 345.00 (TUCO_2 XFMR) 345/230/13.2KV TRANSFORMER CKT 1	560	560	0.21566	107.4733	TUCO INTERCHANGE - TUCO_2 345.00 345KV CKT 1
FDNS	06ALL	4	20WP	G14_046	FROM->TO	TUCO_2 345.00 (TUCO_2 XFMR) 345/230/13.2KV TRANSFORMER CKT 1	560	560	0.21076	102.8738	TUCO INTERCHANGE - TUCO_2 345.00 345KV CKT 1
FDNS	06ALL	4	20WP	G14_046	FROM->TO	TUCO_2 345.00 (TUCO_2 XFMR) 345/230/13.2KV TRANSFORMER CKT 1	560	560	0.21076	102.4022	TUCO INTERCHANGE - TUCO_2 345.00 345KV CKT 1
FDNS	00NR	5	25SP	G14_046	TO->FROM	CARLSBAD INTERCHANGE - PECOS INTERCHANGE 115KV CKT 1	141	141	0.07116	123.5547	HOBBS - KIOWA 7345.00 345KV CKT 1
FDNS	00NR	5	15SP	G14_046	FROM->TO	CHAVES COUNTY INTERCHANGE - SAMSON SUB 115KV CKT 1	120	154	0.17095	105.2504	CHAVES COUNTY INTERCHANGE - URTON SUB 115KV CKT 1

SOLUTION	GROUP	SCENARIO	SEASON	SOURCE	DIRECTION	MONITORED ELEMENT	RATEA (MVA)	RATEB(MVA)	TDF	TC%LOADING (% MVA)	CONTINGENCY
FDNS	00NR	5	15SP	G14_046	FROM->TO	CHAVES COUNTY INTERCHANGE - URTON SUB 115KV CKT 1	159	160	0.17058	102.3286	CHAVES COUNTY INTERCHANGE - SAMSON SUB 115KV CKT 1
FDNS	06ALL	5	15SP	G14_046	FROM->TO	CHISHOLM6 230.00 - ELK CITY 230KV 230KV CKT 1	353	353	0.06688	100.9761	BASE CASE
FDNS	06ALL	5	15SP	G14_046	FROM->TO	ELK CITY 230KV (ELKCTY-6) 230/138/13.8KV TRANSFORMER CKT 1	272	316	0.06688	129.9064	BASE CASE
FDNS	06ALL	5	15SP	G14_046	FROM->TO	ELK CITY 230KV (ELKCTY-6) 230/138/13.8KV TRANSFORMER CKT 1	272	316	0.06688	128.6412	BASE CASE
FDNS	06ALL	5	15G	G14_046	FROM->TO	ELK CITY 230KV (ELKCTY-6) 230/138/13.8KV TRANSFORMER CKT 1	287	316	0.06254	116.3419	BASE CASE
FDNS	06ALL	5	15G	G14_046	FROM->TO	ELK CITY 230KV (ELKCTY-6) 230/138/13.8KV TRANSFORMER CKT 1	287	316	0.06254	115.4406	BASE CASE
FDNS	06ALL	5	15WP	G14_046	FROM->TO	ELK CITY 230KV (ELKCTY-6) 230/138/13.8KV TRANSFORMER CKT 1	287	316	0.0688	112.0665	BASE CASE
FDNS	06ALL	5	15WP	G14_046	FROM->TO	ELK CITY 230KV (ELKCTY-6) 230/138/13.8KV TRANSFORMER CKT 1	287	316	0.0688	111.0777	BASE CASE
FDNS	06ALL	5	20SP	G14_046	FROM->TO	ELK CITY 230KV (ELKCTY-6) 230/138/13.8KV TRANSFORMER CKT 1	272	316	0.06685	107.1735	BASE CASE
FDNS	06ALL	5	20SP	G14_046	FROM->TO	ELK CITY 230KV (ELKCTY-6) 230/138/13.8KV TRANSFORMER CKT 1	272	316	0.06685	106.9225	BASE CASE
FDNS	06ALL	5	20WP	G14_046	FROM->TO	ELK CITY 230KV (ELKCTY-6) 230/138/13.8KV TRANSFORMER CKT 1	287	316	0.06614	106.7889	BASE CASE
FDNS	06ALL	5	20WP	G14_046	FROM->TO	ELK CITY 230KV (ELKCTY-6) 230/138/13.8KV TRANSFORMER CKT 1	287	316	0.06614	106.1215	BASE CASE
FDNS	00NR	6	25SP	G14_046	TO->FROM	CARLSBAD INTERCHANGE - PECOS INTERCHANGE 115KV CKT 1	141	141	0.07113	122.5507	HOBBS - KIOWA 7345.00 345KV CKT 1
FDNS	00NR	6	15SP	G14_046	FROM->TO	CHAVES COUNTY INTERCHANGE - SAMSON SUB 115KV CKT 1	120	154	0.17094	105.2116	CHAVES COUNTY INTERCHANGE - URTON SUB 115KV CKT 1
FDNS	00NR	6	15SP	G14_046	FROM->TO	CHAVES COUNTY INTERCHANGE - URTON SUB 115KV CKT 1	159	160	0.17056	102.2907	CHAVES COUNTY INTERCHANGE - SAMSON SUB 115KV CKT 1
FDNS	09NR	0	15G	G14_059	FROM->TO	G14-059T 230.00 - OGALLALA 230KV CKT 1	320	320	0.83953	125.8320	KEYSTONE - SIDNEY 345KV CKT 1
FDNSLock	09ALL	0	15G	G14_059	FROM->TO	G14-059T 230.00 - OGALLALA 230KV CKT 1	320	320	0.81748	125.0226	KEYSTONE - SIDNEY 345KV CKT 1
FDNS	00NR	0	15SP	G14_059	FROM->TO	G14-059T 230.00 - OGALLALA 230KV CKT 1	320	320	0.83828	124.5109	KEYSTONE - SIDNEY 345KV CKT 1
FDNSLock	09ALL	0	15SP	G14_059	FROM->TO	G14-059T 230.00 - OGALLALA 230KV CKT 1	320	320	0.81763	122.8945	KEYSTONE - SIDNEY 345KV CKT 1
FDNS	09ALL	0	15WP	G14_059	FROM->TO	G14-059T 230.00 - OGALLALA 230KV CKT 1	320	320	0.81718	117.0122	KEYSTONE - SIDNEY 345KV CKT 1
FDNS	00NR	0	25SP	G14_059	FROM->TO	G14-059T 230.00 - OGALLALA 230KV CKT 1	320	320	0.8375	116.3340	KEYSTONE - SIDNEY 345KV CKT 1
FDNS	00NR	0	15WP	G14_059	FROM->TO	G14-059T 230.00 - OGALLALA 230KV CKT 1	320	320	0.83623	115.6280	KEYSTONE - SIDNEY 345KV CKT 1
FDNS	09ALL	0	25SP	G14_059	FROM->TO	G14-059T 230.00 - OGALLALA 230KV CKT 1	320	320	0.8198	115.3575	KEYSTONE - SIDNEY 345KV CKT 1
FDNS	00NR	0	20SP	G14_059	FROM->TO	G14-059T 230.00 - OGALLALA 230KV CKT 1	320	320	0.83816	115.3019	KEYSTONE - SIDNEY 345KV CKT 1
FDNS	09ALL	0	20SP	G14_059	FROM->TO	G14-059T 230.00 - OGALLALA 230KV CKT 1	320	320	0.81974	114.7674	KEYSTONE - SIDNEY 345KV CKT 1
FDNS	00NR	0	20WP	G14_059	FROM->TO	G14-059T 230.00 - OGALLALA 230KV CKT 1	320	320	0.83661	112.8683	KEYSTONE - SIDNEY 345KV CKT 1
FDNS	09ALL	0	20WP	G14_059	FROM->TO	G14-059T 230.00 - OGALLALA 230KV CKT 1	320	320	0.81946	110.9595	KEYSTONE - SIDNEY 345KV CKT 1
FDNS	09NR	0	15G	G14_059	FROM->TO	GGS	1635	1635	0.08822	105.4338	BASE CASE
FDNS	09ALL	0	15G	G14_059	FROM->TO	GGS	1635	1635	0.7494	104.9857	BASE CASE
FDNS	09ALL	0	15WP	G14_059	FROM->TO	GGS	1635	1635	0.75335	102.7627	BASE CASE
FDNS	00NR	0	15WP	G14_059	FROM->TO	GGS	1635	1635	0.37011	102.2452	BASE CASE
FDNS	09ALL	0	15G	G14_059	FROM->TO	REDWILLMINGO	468	468	0.24627	101.0842	BASE CASE
FDNS	00NR	0	15WP	G14_059	FROM->TO	VICTORY HILL (VICTORYHL T1) 230/115/13.8KV TRANSFORMER CKT 1	187	187	0.03485	105.3110	STEGALL - WAYSIDE 230KV CKT 1
FDNS	00NR	0	15WP	G14_059	FROM->TO	VICTORY HILL (VICTORYHL T1) 230/115/13.8KV TRANSFORMER CKT 1	187	187	0.03485	104.7769	STEGALL - WAYSIDE 230KV CKT 1
FDNS	09NR	2	15G	G14_059	FROM->TO	G14-059T 230.00 - OGALLALA 230KV CKT 1	320	320	0.8395	125.5977	KEYSTONE - SIDNEY 345KV CKT 1
FDNSLock	09ALL	2	15G	G14_059	FROM->TO	G14-059T 230.00 - OGALLALA 230KV CKT 1	320	320	0.81777	124.7843	KEYSTONE - SIDNEY 345KV CKT 1
FDNS	00NR	2	15SP	G14_059	FROM->TO	G14-059T 230.00 - OGALLALA 230KV CKT 1	320	320	0.83825	124.5047	KEYSTONE - SIDNEY 345KV CKT 1
FDNSLock	09ALL	2	15SP	G14_059	FROM->TO	G14-059T 230.00 - OGALLALA 230KV CKT 1	320	320	0.81859	122.7529	KEYSTONE - SIDNEY 345KV CKT 1
FDNS	09ALL	2	15WP	G14_059	FROM->TO	G14-059T 230.00 - OGALLALA 230KV CKT 1	320	320	0.81779	116.8049	KEYSTONE - SIDNEY 345KV CKT 1
FDNS	00NR	2	15WP	G14_059	FROM->TO	G14-059T 230.00 - OGALLALA 230KV CKT 1	320	320	0.8362	115.5316	KEYSTONE - SIDNEY 345KV CKT 1
FDNS	00NR	2	15WP	G14_059	FROM->TO	VICTORY HILL (VICTORYHL T1) 230/115/13.8KV TRANSFORMER CKT 1	187	187	0.03487	105.5943	STEGALL - WAYSIDE 230KV CKT 1
FDNS	00NR	2	15WP	G14_059	FROM->TO	VICTORY HILL (VICTORYHL T1) 230/115/13.8KV TRANSFORMER CKT 1	187	187	0.03487	105.1342	STEGALL - WAYSIDE 230KV CKT 1
FDNS	00NR	3	15SP	G14_059	FROM->TO	G14-059T 230.00 - OGALLALA 230KV CKT 1	320	320	0.8409	126.0617	KEYSTONE - SIDNEY 345KV CKT 1
FDNS	09NR	3	15G	G14_059	FROM->TO	G14-059T 230.00 - OGALLALA 230KV CKT 1	320	320	0.84186	125.5611	KEYSTONE - SIDNEY 345KV CKT 1
FDNSLock	09ALL	3	15G	G14_059	FROM->TO	G14-059T 230.00 - OGALLALA 230KV CKT 1	320	320	0.8231	124.4385	KEYSTONE - SIDNEY 345KV CKT 1
FDNSLock	09ALL	3	15SP	G14_059	FROM->TO	G14-059T 230.00 - OGALLALA 230KV CKT 1	320	320	0.82379	122.4590	KEYSTONE - SIDNEY 345KV CKT 1
FDNSLock	00NR	3	15WP	G14_059	FROM->TO	G14-059T 230.00 - OGALLALA 230KV CKT 1	320	320	0.83912	119.7142	KEYSTONE - SIDNEY 345KV CKT 1
FDNS	09ALL	3	15WP	G14_059	FROM->TO	G14-059T 230.00 - OGALLALA 230KV CKT 1	320	320	0.82311	116.8160	KEYSTONE - SIDNEY 345KV CKT 1
FDNS	00NR	3	15WP	G14_059	FROM->TO	VICTORY HILL (VICTORYHL T1) 230/115/13.8KV TRANSFORMER CKT 1	187	187	0.03175	101.0614	STEGALL - WAYSIDE 230KV CKT 1
FDNS	00NR	3	15WP	G14_059	FROM->TO	VICTORY HILL (VICTORYHL T1) 230/115/13.8KV TRANSFORMER CKT 1	187	187	0.03175	100.6369	STEGALL - WAYSIDE 230KV CKT 1
FDNS	00NR	4	15SP	G14_059	FROM->TO	G14-059T 230.00 - OGALLALA 230KV CKT 1	320	320	0.8409	125.8998	KEYSTONE - SIDNEY 345KV CKT 1
FDNS	09NR	4	15G	G14_059	FROM->TO	G14-059T 230.00 - OGALLALA 230KV CKT 1	320	320	0.84186	125.5394	KEYSTONE - SIDNEY 345KV CKT 1
FDNSLock	09ALL	4	15G	G14_059	FROM->TO	G14-059T 230.00 - OGALLALA 230KV CKT 1	320	320	0.82311	124.4290	KEYSTONE - SIDNEY 345KV CKT 1
FDNS	09ALL	4	15SP	G14_059	FROM->TO	G14-059T 230.00 - OGALLALA 230KV CKT 1	320	320	0.8238	121.6178	KEYSTONE - SIDNEY 345KV CKT 1
FDNSLock	00NR	4	15WP	G14_059	FROM->TO	G14-059T 230.00 - OGALLALA 230KV CKT 1	320	320	0.83911	119.6486	KEYSTONE - SIDNEY 345KV CKT 1
FDNS	09ALL	4	15WP	G14_059	FROM->TO	G14-059T 230.00 - OGALLALA 230KV CKT 1	320	320	0.82312	116.7808	KEYSTONE - SIDNEY 345KV CKT 1
FDNS	00NR	4	25SP	G14_059	FROM->TO	G14-059T 230.00 - OGALLALA 230KV CKT 1	320	320	0.8375	116.1383	KEYSTONE - SIDNEY 345KV CKT 1
FDNS	09ALL	4	25SP	G14_059	FROM->TO	G14-059T 230.00 - OGALLALA 230KV CKT 1	320	320	0.82063	115.2171	KEYSTONE - SIDNEY 345KV CKT 1
FDNS	00NR	4	20SP	G14_059	FROM->TO	G14-059T 230.00 - OGALLALA 230KV CKT 1	320	320	0.83816	115.1176	KEYSTONE - SIDNEY 345KV CKT 1
FDNS	09ALL	4	20SP	G14_059	FROM->TO	G14-059T 230.00 - OGALLALA 230KV CKT 1	320	320	0.82059	114.6469	KEYSTONE - SIDNEY 345KV CKT 1
FDNS	00NR	4	20WP	G14_059	FROM->TO	G14-059T 230.00 - OGALLALA 230KV CKT 1	320	320	0.83661	112.7372	KEYSTONE - SIDNEY 345KV CKT 1
FDNS	09ALL	4	20WP	G14_059	FROM->TO	G14-059T 230.00 - OGALLALA 230KV CKT 1	320	320	0.82062	110.9362	KEYSTONE - SIDNEY 345KV CKT 1
FDNS	00NR	4	15WP	G14_059	FROM->TO	VICTORY HILL (VICTORYHL T1) 230/115/13.8KV TRANSFORMER CKT 1	187	187	0.03175	101.1351	STEGALL - WAYSIDE 230KV CKT 1
FDNS	00NR	4	15WP	G14_059	FROM->TO	VICTORY HILL (VICTORYHL T1) 230/115/13.8KV TRANSFORMER CKT 1	187	187	0.03175	100.7147	STEGALL - WAYSIDE 230KV CKT 1
FDNSLock-Blown up	06ALL	0	15G	G14_065		Non-Converged Contingency	0	0	1.21416	-	SPP-SWPS-06
FDNSLock-Blown up	06ALL	0	15G	G14_065		Non-Converged Contingency	0	0	0.57323	-	SPP-SWPS-T41
FDNSLock-Blown up	06ALL	0	15G	G14_065		Non-Converged Contingency	0	0	0.31443	-	SPSCONT-02X
FDNSLock-Blown up	06ALL	0	15G	G14_065		Non-Converged Contingency	717	926	0.24283	-	CROSSROADS 345.00 - TOLK STATION 345KV CKT 1
FDNSLock-Blown up	06ALL	0	15G	G14_065		Non-Converged Contingency	560	560	0.24283	-	TOLK STATION (ABBXNL844501) 345/230/13.2KV TRANSFORMER CKT 1
FDNSLock-Blown up	06ALL	0	15G	G14_065		Non-Converged Contingency	319	351	0.23661	-	AMOCO SWITCHING STATION - SUNDOWN INTERCHANGE 230KV CKT 1
FDNSLock-Blown up	06ALL	0	15G	G14_065		Non-Converged Contingency	319	351	0.23661	-	AMOCO SWITCHING STATION - YOAKUM COUNTY INTERCHANGE 230KV CKT 1
FDNSLock-Blown up	06ALL	0	15G	G14_065		Non-Converged Contingency	319	351	0.20877	-	LUBBOCK SOUTH INTERCHANGE - WOLFFORTH INTERCHANGE 230KV CKT 1
FDNSLock-Blown up	06ALL	0	15G	G14_065		Non-Converged Contingency	319	351	0.19648	-	SUNDOWN INTERCHANGE - WOLFFORTH INTERCHANGE 230KV CKT 1
FDNSLock-Blown up	06ALL	0	15G	G14_065		Non-Converged Contingency	956	994	0.1909	-	G14-074T 345.00 - OKLAUNION 345KV CKT 1
FDNSLock-Blown up	06ALL	0	15G	G14_065		Non-Converged Contingency	956	994	0.1909	-	G14-074T 345.00 - TUCO INTERCHANGE 345KV CKT 1

SOLUTION	GROUP	SCENARIO	SEASON	SOURCE	DIRECTION	MONITORED ELEMENT	RATEA (MVA)	RATEB(MVA)	TDF	TC%LOADING (% MVA)	CONTINGENCY
FDNSLock-Blown up	06ALL	0	15G	G14_065		Non-Converged Contingency	956	994	0.1909	-	OKLAUNION 345KV SWITCHED SHUNT
FDNSLock-Blown up	06ALL	0	15G	G14_065		Non-Converged Contingency	0	0	0.19037	-	SPSCONT-05AX
FDNSLock-Blown up	06ALL	0	15G	G14_065		Non-Converged Contingency	560	560	0.17935	-	TUCO INTERCHANGE (GE M1022338) 345/230/13.2KV TRANSFORMER CKT 1
FDNSLock-Blown up	06ALL	0	15G	G14_065		Non-Converged Contingency	478	502	0.17692	-	NEWHART 230 - PLANT X STATION 230KV CKT 1
FDNSLock-Blown up	06ALL	0	15G	G14_065		Non-Converged Contingency	478	502	0.17611	-	TOLK STATION EAST - TUCO INTERCHANGE 230KV CKT 1
FDNSLock-Blown up	06ALL	0	15G	G14_065		Non-Converged Contingency	1195	1195	0.17133	-	GRACEMONT - MINCO 345KV CKT 1
FDNSLock-Blown up	06ALL	0	15G	G14_065		Non-Converged Contingency	956	1052	0.15721	-	G14_038T 345.00 - Hitchland Interchange 345KV CKT 1
FDNSLock-Blown up	06ALL	0	15G	G14_065		Non-Converged Contingency	956	1052	0.15721	-	G14_038T 345.00 - POTTER COUNTY INTERCHANGE 345KV CKT 1
FDNSLock-Blown up	06ALL	0	15G	G14_065		Non-Converged Contingency	560	560	0.15721	-	POTTER COUNTY INTERCHANGE (WAUK 90343-A) 345/230/13.2KV TRANSFORMER CKT 1
FDNSLock-Blown up	06ALL	0	15G	G14_065		Non-Converged Contingency	560	644	0.15629	-	TUCO INTERCHANGE (SIEM 8743066) 345/230/13.2KV TRANSFORMER CKT 2
FDNSLock-Blown up	06ALL	0	15G	G14_065		Non-Converged Contingency	560	560	0.15414	-	TUCO_2 345.00 (TUCO_2 XFMR) 345/230/13.2KV TRANSFORMER CKT 1
FDNSLock-Blown up	06ALL	0	15G	G14_065		Non-Converged Contingency	1330	1940	0.15337	-	CHISHOLM7 345.00 - GRACEMONT 345KV CKT 1
FDNSLock-Blown up	06ALL	0	15G	G14_065		Non-Converged Contingency	319	351	0.15246	-	BUSHLAND INTERCHANGE - DEAF SMITH COUNTY INTERCHANGE 230KV CKT 1
FDNSLock-Blown up	06ALL	0	15G	G14_065		Non-Converged Contingency	319	351	0.15246	-	BUSHLAND INTERCHANGE 230KV SWITCHED SHUNT
FDNSLock-Blown up	06ALL	0	15G	G14_065		Non-Converged Contingency	1792	1792	0.1496	-	CHISHOLM7 345.00 - WOODWARD DISTRICT EHV 345KV CKT 1
FDNSLock-Blown up	06ALL	0	15G	G14_065		Non-Converged Contingency	1792	1792	0.14944	-	BORDER 7345.00 - CHISHOLM7 345.00 345KV CKT 1
FDNSLock-Blown up	06ALL	0	15G	G14_065		Non-Converged Contingency	1792	1792	0.14944	-	BORDER 7345.00 - CHISHOLM7 345.00 345KV CKT 2
FDNSLock-Blown up	06ALL	0	15G	G14_065		Non-Converged Contingency	1420	1775	0.14944	-	BORDER 7345.00 - TUCO_2 345.00 345KV CKT 1
FDNSLock-Blown up	06ALL	0	15G	G14_065		Non-Converged Contingency	1420	1775	0.14944	-	BORDER 7345.00 - TUCO_2 345.00 345KV CKT 2
FDNSLock-Blown up	06ALL	0	15G	G14_065		Non-Converged Contingency	319	351	0.14913	-	G13_027T 230.00 - TOLK STATION WEST 230KV CKT 1
FDNSLock-Blown up	06ALL	0	15G	G14_065		Non-Converged Contingency	478	502	0.14508	-	JONES STATION - TUCO INTERCHANGE 230KV CKT 1
FDNSLock-Blown up	06ALL	0	15G	G14_065		Non-Converged Contingency	1420	1775	0.14474	-	TUCO INTERCHANGE - TUCO_2 345.00 345KV CKT 1
FDNSLock-Blown up	06ALL	0	15G	G14_065		Non-Converged Contingency	478	478	0.13973	-	DEAF SMITH COUNTY INTERCHANGE - G14-068T 230.00 230KV CKT 1
FDNSLock-Blown up	06ALL	0	15G	G14_065		Non-Converged Contingency	478	478	0.13973	-	G14-068T 230.00 - PLANT X STATION 230KV CKT 1
FDNSLock-Blown up	06ALL	0	15G	G14_065		Non-Converged Contingency	478	502	0.13826	-	TUCO INTERCHANGE - TUCO_2 230.00 230KV CKT 1
FDNSLock-Blown up	06ALL	0	15G	G14_065		Non-Converged Contingency	319	351	0.13428	-	BUSHLAND INTERCHANGE - POTTER COUNTY INTERCHANGE 230KV CKT 1
FDNSLock-Blown up	06ALL	0	15G	G14_065		Non-Converged Contingency	0	0	0.12998	-	SPP-SWPS-T59
FDNSLock-Blown up	06ALL	0	15G	G14_065		Non-Converged Contingency	319	351	0.12787	-	CHAVES COUNTY INTERCHANGE - SAN JUAN MESA TAP 230KV CKT 1
FDNSLock-Blown up	06ALL	0	15G	G14_065		Non-Converged Contingency	0	0	0.12522	-	SPP-SWPS-02
FDNSLock-Blown up	06ALL	0	15G	G14_065		Non-Converged Contingency	956	1052	0.12317	-	FINNEY SWITCHING STATION - Hitchland Interchange 345KV CKT 1
FDNSLock-Blown up	06ALL	0	15G	G14_065		Non-Converged Contingency	956	1052	0.12317	-	FINNEY SWITCHING STATION - HOLCOMB 345KV CKT 1
FDNSLock-Blown up	06ALL	0	15G	G14_065		Non-Converged Contingency	0	0	0.12317	-	SPP-SWPS-05
FDNSLock-Blown up	06ALL	0	15G	G14_065		Non-Converged Contingency	0	0	0.11814	-	SPP-SWPS-03
FDNSLock-Blown up	06ALL	0	15G	G14_065		Non-Converged Contingency	478	502	0.11209	-	NEWHART 230 - POTTER COUNTY INTERCHANGE 230KV CKT 1
FDNSLock-Blown up	06ALL	0	15G	G14_065		Non-Converged Contingency	0	0	0.1112	-	SPP-SWPS-V49
FDNSLock-Blown up	06ALL	0	15G	G14_065		Non-Converged Contingency	0	0	0.10242	-	SPP-SWPS-T14
FDNSLock-Blown up	06ALL	0	15G	G14_065		Non-Converged Contingency	218	239	0.10009	-	WOLFFORTH INTERCHANGE - YUMA INTERCHANGE 115KV CKT 1
FDNSLock-Blown up	06ALL	0	15G	G14_065		Non-Converged Contingency	1420	1775	0.09518	-	G11_051T 345.00 - TATONGA7 345.00 345KV CKT 1
FDNSLock-Blown up	06ALL	0	15G	G14_065		Non-Converged Contingency	1420	1775	0.09518	-	G11_051T 345.00 - WOODWARD DISTRICT EHV 345KV CKT 1
FDNSLock-Blown up	06ALL	0	15G	G14_065		Non-Converged Contingency	1195	1195	0.09518	-	NORTHWEST - TATONGA7 345.00 345KV CKT 1
FDNSLock-Blown up	06ALL	0	15G	G14_065		Non-Converged Contingency	0	0	0.09518	-	SPSCONT-04
FDNSLock-Blown up	06ALL	0	15G	G14_065		Non-Converged Contingency	0	0	0.09518	-	SPSCONT-05B
FDNSLock-Blown up	06ALL	0	15G	G14_065		Non-Converged Contingency	319	351	0.08296	-	AMARILLO SOUTH INTERCHANGE - SWISHER COUNTY INTERCHANGE 230KV CKT 1
FDNSLock-Blown up	06ALL	0	15G	G14_065		Non-Converged Contingency	1420	1775	0.07825	-	G11-14T 345.00 - WOODWARD DISTRICT EHV 345KV CKT 1
FDNSLock-Blown up	06ALL	0	15G	G14_065		Non-Converged Contingency	1420	1775	0.07825	-	G11-14T 345.00 - WOODWARD DISTRICT EHV 345KV CKT 2
FDNSLock-Blown up	06ALL	0	15G	G14_065		Non-Converged Contingency	478	502	0.06601	-	HITCHLAND INTERCHANGE - MOORE COUNTY INTERCHANGE 230KV CKT 1
FDNSLock-Blown up	06ALL	0	15G	G14_065		Non-Converged Contingency	478	502	0.06601	-	HITCHLAND INTERCHANGE - MOORE COUNTY INTERCHANGE 230KV CKT 1
FDNSLock-Blown up	06ALL	0	15G	G14_065		Non-Converged Contingency	319	351	0.06513	-	CARLISLE INTERCHANGE - TUCO INTERCHANGE 230KV CKT 1
FDNSLock-Blown up	06ALL	0	15G	G14_065		Non-Converged Contingency	439	439	0.06261	-	CHISHOLM6 230.00 - SWEETWATER 230KV CKT 1
FDNSLock-Blown up	06ALL	0	15G	G14_065		Non-Converged Contingency	319	351	0.06261	-	GRAPEVINE INTERCHANGE - STATELINE INTERCHANGE 230KV CKT 1
FDNSLock-Blown up	06ALL	0	15G	G14_065		Non-Converged Contingency	349	395	0.06261	-	STATELINE INTERCHANGE - STLN-DEMARC6 230KV CKT 1
FDNSLock-Blown up	06ALL	0	15G	G14_065		Non-Converged Contingency	396	441	0.06261	-	STLN-DEMARC6 - SWEETWATER 230KV CKT 1
FDNSLock-Blown up	06ALL	0	15G	G14_065		Non-Converged Contingency	439	439	0.05852	-	CHISHOLM6 230.00 - ELK CITY 230KV 230KV CKT 1
FDNSLock-Blown up	06ALL	0	15G	G14_065		Non-Converged Contingency	287	316	0.05852	-	ELK CITY 230KV (ELKCTY-6) 230/138/13.8KV TRANSFORMER CKT 1
FDNSLock-Blown up	06ALL	0	15G	G14_065		Non-Converged Contingency	319	351	0.05788	-	MOORE COUNTY INTERCHANGE - POTTER COUNTY INTERCHANGE 230KV CKT 1
FDNSLock-Blown up	06ALL	0	15G	G14_065		Non-Converged Contingency	319	351	0.05788	-	MOORE COUNTY INTERCHANGE - POTTER COUNTY INTERCHANGE 230KV CKT 1
FDNSLock-Blown up	06ALL	0	15G	G14_065		Non-Converged Contingency	1413	1517	0.05726	-	BUCKNER7 345.00 - SPEARVILLE 345KV CKT 1
FDNSLock-Blown up	06ALL	0	15G	G14_065		Non-Converged Contingency	319	351	0.05553	-	GRAPEVINE INTERCHANGE - NICHOLS STATION 230KV CKT 1
FDNSLock-Blown up	06ALL	0	15G	G14_065		Non-Converged Contingency	96	96	0.0325	-	CARGILL SUB - DEAF SMITH REC-#24 115KV CKT 1
FDNSLock-Blown up	06ALL	0	15G	G14_065		Non-Converged Contingency	96	96	0.0325	-	CURRY COUNTY INTERCHANGE - DEAF SMITH REC-#20 115KV CKT 1
FDNSLock-Blown up	06ALL	0	15G	G14_065		Non-Converged Contingency	96	96	0.0325	-	DEAF SMITH REC-#20 - PARMER COUNTY SUB 115KV CKT 1
FDNSLock-Blown up	06ALL	0	15G	G14_065		Non-Converged Contingency	96	96	0.0325	-	DEAF SMITH REC-#24 - PARMER COUNTY SUB 115KV CKT 1
FDNSLock-Blown up	06ALL	0	15SP	G14_065		Non-Converged Contingency	0	0	0.32709	-	SPSCONT-02X
FDNSLock-Blown up	06ALL	0	15SP	G14_065		Non-Converged Contingency	956	994	0.19715	-	G14-074T 345.00 - OKLAUNION 345KV CKT 1
FDNSLock-Blown up	06ALL	0	15SP	G14_065		Non-Converged Contingency	956	994	0.19715	-	G14-074T 345.00 - TUCO INTERCHANGE 345KV CKT 1
FDNSLock-Blown up	06ALL	0	15SP	G14_065		Non-Converged Contingency	956	1052	0.16355	-	G14_038T 345.00 - Hitchland Interchange 345KV CKT 1
FDNSLock-Blown up	06ALL	0	15SP	G14_065		Non-Converged Contingency	1420	1775	0.15347	-	BORDER 7345.00 - TUCO_2 345.00 345KV CKT 1
FDNSLock-Blown up	06ALL	0	15SP	G14_065		Non-Converged Contingency	1420	1775	0.15347	-	BORDER 7345.00 - TUCO_2 345.00 345KV CKT 2
FDNSLock-Blown up	06ALL	0	15SP	G14_065		Non-Converged Contingency	478	478	0.14055	-	G14-068T 230.00 - PLANT X STATION 230KV CKT 1
FDNSLock-Blown up	06ALL	0	15WP	G14_065		Non-Converged Contingency	1033	1071	0.20202	-	G14-074T 345.00 - OKLAUNION 345KV CKT 1
FDNSLock-Blown up	06ALL	0	20SP	G14_065		Non-Converged Contingency	956	994	0.27549	-	G14-074T 345.00 - OKLAUNION 345KV CKT 1
FDNSLock-Blown up	06ALL	0	20WP	G14_065		Non-Converged Contingency	0	0	0.3046	-	SPSCONT-02X
FDNSLock-Blown up	06ALL	0	20WP	G14_065		Non-Converged Contingency	1033	1071	0.27248	-	G14-074T 345.00 - OKLAUNION 345KV CKT 1
FDNSLock-Blown up	06ALL	0	20WP	G14_065		Non-Converged Contingency	1033	1071	0.27248	-	G14-074T 345.00 - TUCO INTERCHANGE 345KV CKT 1
FDNSLock-Blown up	06ALL	0	20WP	G14_065		Non-Converged Contingency	1420	1775	0.2105	-	BORDER 7345.00 - TUCO_2 345.00 345KV CKT 1

SOLUTION	GROUP	SCENARIO	SEASON	SOURCE	DIRECTION	MONITORED ELEMENT	RATEA (MVA)	RATEB(MVA)	TDF	TC%LOADING (% MVA)	CONTINGENCY
FDNSLock-Blown up	06ALL	0	20WP	G14_065		Non-Converged Contingency	1792	1792	0.2105	-	BORDER 7345.00 - WOODWARD DISTRICT EHV 345KV CKT 1
FDNSLock-Blown up	06ALL	0	20WP	G14_065		Non-Converged Contingency	956	1052	0.1523	-	G14_038T 345.00 - Hitchland Interchange 345KV CKT 1
FDNSLock-Blown up	06ALL	2	15G	G14_065		Non-Converged Contingency	0	0	0.27833	-	SPSCONT-02X
FDNSLock-Blown up	06ALL	2	15G	G14_065		Non-Converged Contingency	956	994	0.20855	-	G14-074T 345.00 - OKLAUNION 345KV CKT 1
FDNSLock-Blown up	06ALL	2	15G	G14_065		Non-Converged Contingency	956	994	0.20855	-	G14-074T 345.00 - TUCO INTERCHANGE 345KV CKT 1
FDNSLock-Blown up	06ALL	2	15G	G14_065		Non-Converged Contingency	1420	1775	0.16737	-	BORDER 7345.00 - TUCO_2 345.00 345KV CKT 1
FDNSLock-Blown up	06ALL	2	15G	G14_065		Non-Converged Contingency	1420	1775	0.16737	-	BORDER 7345.00 - TUCO_2 345.00 345KV CKT 2
FDNSLock-Blown up	06ALL	2	15G	G14_065		Non-Converged Contingency	956	1052	0.13916	-	G14_038T 345.00 - Hitchland Interchange 345KV CKT 1
FDNSLock-Blown up	06ALL	2	15G	G14_065		Non-Converged Contingency	956	1052	0.13916	-	G14_038T 345.00 - POTTER COUNTY INTERCHANGE 345KV CKT 1
FDNSLock-Blown up	06ALL	2	15G	G14_065		Non-Converged Contingency	560	560	0.13916	-	POTTER COUNTY INTERCHANGE (WAUK 90343-A) 345/230/13.2KV TRANSFORMER CKT 1
FDNSLock-Blown up	06ALL	2	15SP	G14_065		Non-Converged Contingency	956	994	0.21432	-	G14-074T 345.00 - OKLAUNION 345KV CKT 1
FDNSLock-Blown up	06ALL	2	15WP	G14_065		Non-Converged Contingency	1033	1071	0.21928	-	G14-074T 345.00 - OKLAUNION 345KV CKT 1
FDNSLock-Blown up	06ALL	3	15G	G14_065		Non-Converged Contingency	0	0	0.37875	-	SPSCONT-02X
FDNSLock-Blown up	06ALL	3	15G	G14_065		Non-Converged Contingency	956	994	0.19178	-	G14-074T 345.00 - OKLAUNION 345KV CKT 1
FDNSLock-Blown up	06ALL	3	15G	G14_065		Non-Converged Contingency	956	1052	0.18937	-	G14_038T 345.00 - Hitchland Interchange 345KV CKT 1
FDNSLock-Blown up	06ALL	3	15G	G14_065		Non-Converged Contingency	956	1052	0.18937	-	G14_038T 345.00 - POTTER COUNTY INTERCHANGE 345KV CKT 1
FDNS	06ALL	0	15G	G14_065	TO->FROM	AMOCO SWITCHING STATION - YOAKUM COUNTY INTERCHANGE 230KV CKT 1	319	351	0.25169	110.8847	COCHRAN INTERCHANGE - G15-014T 115.00 115KV CKT 1
FDNS	06ALL	0	15G	G14_065	TO->FROM	AMOCO SWITCHING STATION - YOAKUM COUNTY INTERCHANGE 230KV CKT 1	319	351	0.26792	107.2145	TERRY COUNTY INTERCHANGE - WOLFFORTH INTERCHANGE 115KV CKT 1
FDNS	06ALL	0	15G	G14_065	TO->FROM	AMOCO SWITCHING STATION - YOAKUM COUNTY INTERCHANGE 230KV CKT 1	319	351	0.25169	106.7456	COCHRAN INTERCHANGE - PACIFIC SUB 115KV CKT 1
FDNS	06ALL	0	15G	G14_065	TO->FROM	AMOCO SWITCHING STATION - YOAKUM COUNTY INTERCHANGE 230KV CKT 1	319	351	0.25169	106.286	SPP-SWPS-V56
FDNS	06ALL	0	15G	G14_065	TO->FROM	AMOCO SWITCHING STATION - YOAKUM COUNTY INTERCHANGE 230KV CKT 1	319	351	0.25169	105.5437	PACIFIC SUB - SUNDOWN INTERCHANGE 115KV CKT 1
FDNS	06ALL	0	15G	G14_065	TO->FROM	AMOCO SWITCHING STATION - YOAKUM COUNTY INTERCHANGE 230KV CKT 1	319	351	0.25965	105.2484	OASIS INTERCHANGE - SAN JUAN MESA TAP 230KV CKT 1
FDNS	06ALL	0	15G	G14_065	TO->FROM	AMOCO SWITCHING STATION - YOAKUM COUNTY INTERCHANGE 230KV CKT 1	319	351	0.23661	104.8902	BASE CASE
FDNS	06ALL	0	15G	G14_065	TO->FROM	AMOCO SWITCHING STATION - YOAKUM COUNTY INTERCHANGE 230KV CKT 1	319	351	0.30442	103.8708	G13_027T 230.00 - YOAKUM COUNTY INTERCHANGE 230KV CKT 1
FDNS	06ALL	0	15G	G14_065	TO->FROM	AMOCO SWITCHING STATION - YOAKUM COUNTY INTERCHANGE 230KV CKT 1	319	351	0.25353	101.6798	DENVER CITY INTERCHANGE N. - TERRY COUNTY INTERCHANGE 115KV CKT 1
FDNS	06ALL	0	15SP	G14_065	TO->FROM	AMOCO SWITCHING STATION - YOAKUM COUNTY INTERCHANGE 230KV CKT 1	319	351	0.31166	100.4989	G13_027T 230.00 - TOLK STATION WEST 230KV CKT 1
FDNS	06ALL	0	15G	G14_065	TO->FROM	AMOCO SWITCHING STATION - YOAKUM COUNTY INTERCHANGE 230KV CKT 1	319	351	0.24464	100.2933	SEAGRAVES INTERCHANGE - SULPHUR INTERCHANGE 115KV CKT 1
FDNS	06ALL	0	15SP	G14_065	TO->FROM	AMOCO SWITCHING STATION - YOAKUM COUNTY INTERCHANGE 230KV CKT 1	319	351	0.30072	100	CROSSROADS 345.00 - TOLK STATION 345KV CKT 1
FDNS	06ALL	0	15SP	G14_065	TO->FROM	AMOCO SWITCHING STATION - YOAKUM COUNTY INTERCHANGE 230KV CKT 1	319	351	0.30072	100	TOLK STATION (ABBXNL844501) 345/230/13.2KV TRANSFORMER CKT 1
FDNS	06ALL	0	15G	G14_065	TO->FROM	AMOCO SWITCHING STATION - YOAKUM COUNTY INTERCHANGE 230KV CKT 1	319	351	0.24385	99.9	SPP-SWPS-T35
FDNS	06ALL	0	15G	G14_065	TO->FROM	AMOCO SWITCHING STATION - YOAKUM COUNTY INTERCHANGE 230KV CKT 1	319	351	0.24385	99.8	PRENTICE SUB - YOAKUM COUNTY INTERCHANGE 115KV CKT 1
FDNS	06ALL	0	15G	G14_065	TO->FROM	AMOCO SWITCHING STATION - YOAKUM COUNTY INTERCHANGE 230KV CKT 1	319	351	0.20788	99.5	PLANT X STATION - SUNDOWN INTERCHANGE 230KV CKT 1
FDNS	06ALL	0	15G	G14_065	TO->FROM	CARGILL SUB - DEAF SMITH REC-#24 115KV CKT 1	96	96	0.0325	105.5446	BASE CASE
FDNS	06ALL	0	15SP	G14_065	TO->FROM	CARGILL SUB - DEAF SMITH REC-#24 115KV CKT 1	96	96	0.03271	101.5046	BASE CASE
FDNS	06ALL	0	15SP	G14_065	FROM->TO	CURRY COUNTY INTERCHANGE - DEAF SMITH REC-#20 115KV CKT 1	96	96	0.03271	134.4755	BASE CASE
FDNS	06ALL	0	15G	G14_065	FROM->TO	CURRY COUNTY INTERCHANGE - DEAF SMITH REC-#20 115KV CKT 1	96	96	0.0325	128.1788	BASE CASE
FDNS	06ALL	0	15SP	G14_065	FROM->TO	DEAF SMITH REC-#20 - PARMER COUNTY SUB 115KV CKT 1	96	96	0.03271	121.3248	BASE CASE
FDNS	06ALL	0	15G	G14_065	FROM->TO	DEAF SMITH REC-#20 - PARMER COUNTY SUB 115KV CKT 1	96	96	0.0325	119.1935	BASE CASE
FDNS	06ALL	0	15G	G14_065	TO->FROM	DEAF SMITH REC-#24 - PARMER COUNTY SUB 115KV CKT 1	96	96	0.0325	113.7704	BASE CASE
FDNS	06ALL	0	15SP	G14_065	TO->FROM	DEAF SMITH REC-#24 - PARMER COUNTY SUB 115KV CKT 1	96	96	0.03271	113.2753	BASE CASE
FDNS	06ALL	0	15SP	G14_065	FROM->TO	ELK CITY 230KV (ELKCTY-6) 230/138/13.8KV TRANSFORMER CKT 1	272	316	0.06351	125.7575	BASE CASE
FDNS	06ALL	0	15SP	G14_065	FROM->TO	ELK CITY 230KV (ELKCTY-6) 230/138/13.8KV TRANSFORMER CKT 1	272	316	0.06351	124.0328	BASE CASE
FDNS	06ALL	0	15G	G14_065	FROM->TO	ELK CITY 230KV (ELKCTY-6) 230/138/13.8KV TRANSFORMER CKT 1	287	316	0.05852	112.017	BASE CASE
FDNS	06ALL	0	15G	G14_065	FROM->TO	ELK CITY 230KV (ELKCTY-6) 230/138/13.8KV TRANSFORMER CKT 1	287	316	0.05852	110.2834	BASE CASE
FDNS	06ALL	0	15WP	G14_065	FROM->TO	ELK CITY 230KV (ELKCTY-6) 230/138/13.8KV TRANSFORMER CKT 1	287	316	0.06533	107.7723	BASE CASE
FDNS	06ALL	0	15WP	G14_065	FROM->TO	ELK CITY 230KV (ELKCTY-6) 230/138/13.8KV TRANSFORMER CKT 1	287	316	0.06533	106.4302	BASE CASE
FDNS	06ALL	0	20WP	G14_065	TO->FROM	GRAPEVINE INTERCHANGE - NICHOLS STATION 230KV CKT 1	329	361	0.07736	121.1428	BASE CASE
FDNS	06ALL	0	15G	G14_065	TO->FROM	GRAPEVINE INTERCHANGE - NICHOLS STATION 230KV CKT 1	319	351	0.05553	105.2692	BASE CASE
FDNS	06ALL	0	20SP	G14_065	TO->FROM	GRAPEVINE INTERCHANGE - NICHOLS STATION 230KV CKT 1	319	351	0.07923	99.5	BASE CASE
FDNS	06ALL	0	15SP	G14_065	TO->FROM	LUBBOCK SOUTH INTERCHANGE - WOLFFORTH INTERCHANGE 230KV CKT 1	319	351	0.25883	115.1095	TOLK STATION EAST - TUCO INTERCHANGE 230KV CKT 1
FDNS	06ALL	0	15G	G14_065	TO->FROM	LUBBOCK SOUTH INTERCHANGE - WOLFFORTH INTERCHANGE 230KV CKT 1	319	351	0.27372	100.9916	SP-WOLF_TP 3115.00 - YUMA INTERCHANGE 115KV CKT 1
FDNS	06ALL	0	15SP	G14_065	TO->FROM	LUBBOCK SOUTH INTERCHANGE - WOLFFORTH INTERCHANGE 230KV CKT 1	319	351	0.27734	99.9	WOLFFORTH INTERCHANGE - YUMA INTERCHANGE 115KV CKT 1
FDNS	06ALL	0	15SP	G14_065	TO->FROM	NEWHART 230 - PLANT X STATION 230KV CKT 1	478	502	0.22348	131.4399	DEAF SMITH COUNTY INTERCHANGE - G14-068T 230.00 230KV CKT 1
FDNS	06ALL	0	15SP	G14_065	TO->FROM	NEWHART 230 - PLANT X STATION 230KV CKT 1	478	502	0.22705	125.803	TOLK STATION EAST - TUCO INTERCHANGE 230KV CKT 1
FDNS	06ALL	0	15SP	G14_065	TO->FROM	NEWHART 230 - PLANT X STATION 230KV CKT 1	478	502	0.21769	112.8584	BUSHLAND INTERCHANGE - DEAF SMITH COUNTY INTERCHANGE 230KV CKT 1
FDNS	06ALL	0	15SP	G14_065	TO->FROM	NEWHART 230 - PLANT X STATION 230KV CKT 1	478	502	0.21233	105.469	SUNDOWN INTERCHANGE - WOLFFORTH INTERCHANGE 230KV CKT 1
FDNS	06ALL	0	15SP	G14_065	TO->FROM	NEWHART 230 - PLANT X STATION 230KV CKT 1	478	502	0.20709	101.3263	LUBBOCK SOUTH INTERCHANGE - WOLFFORTH INTERCHANGE 230KV CKT 1
FDNS	0	0	25SP	G14_065	TO->FROM	OCHOA SUB - PNDEROSATP 3115.00 115KV CKT 1	141	141	0.33953	137.975	HOBBS - KIOWA 7345.00 345KV CKT 1
FDNS	06ALL	0	25SP	G14_065	TO->FROM	OCHOA SUB - PNDEROSATP 3115.00 115KV CKT 1	141	141	0.3397	137.814	HOBBS - KIOWA 7345.00 345KV CKT 1
FDNS	06ALL	0	25SP	G14_065	TO->FROM	OCHOA SUB - PNDEROSATP 3115.00 115KV CKT 1	141	141	0.3018	123.155	KIOWA 7345.00 - RDRUNNER 7345.00 345KV CKT 1
FDNS	06ALL	0	25SP	G14_065	TO->FROM	OCHOA SUB - PNDEROSATP 3115.00 115KV CKT 1	141	141	0.3018	122.7674	RDRUNNER 7345.00 (UPDATE LATER) 345/115/13.2KV TRANSFORMER CKT 1
FDNS	0	0	25SP	G14_065	TO->FROM	OCHOA SUB - PNDEROSATP 3115.00 115KV CKT 1	141	141	0.30173	116.3835	KIOWA 7345.00 - RDRUNNER 7345.00 345KV CKT 1
FDNS	0	0	25SP	G14_065	TO->FROM	OCHOA SUB - PNDEROSATP 3115.00 115KV CKT 1	141	141	0.30173	115.9298	RDRUNNER 7345.00 (UPDATE LATER) 345/115/13.2KV TRANSFORMER CKT 1
FDNS	06ALL	0	20SP	G14_065	TO->FROM	OCHOA SUB - PNDEROSATP 3115.00 115KV CKT 1	141	141	0.33967	115.4089	HOBBS - KIOWA 7345.00 345KV CKT 1
FDNS	0	0	20SP	G14_065	TO->FROM	OCHOA SUB - PNDEROSATP 3115.00 115KV CKT 1	141	141	0.33953	114.6504	HOBBS - KIOWA 7345.00 345KV CKT 1
FDNS	06ALL	0	20SP	G14_065	TO->FROM	OCHOA SUB - PNDEROSATP 3115.00 115KV CKT 1	141	141	0.30178	109.2087	KIOWA 7345.00 - RDRUNNER 7345.00 345KV CKT 1
FDNS	06ALL	0	20SP	G14_065	TO->FROM	OCHOA SUB - PNDEROSATP 3115.00 115KV CKT 1	141	141	0.30178	108.9074	RDRUNNER 7345.00 (UPDATE LATER) 345/115/13.2KV TRANSFORMER CKT 1
FDNS	0	0	20SP	G14_065	TO->FROM	OCHOA SUB - PNDEROSATP 3115.00 115KV CKT 1	141	141	0.30173	102.1706	KIOWA 7345.00 - RDRUNNER 7345.00 345KV CKT 1
FDNS	0	0	20SP	G14_065	TO->FROM	OCHOA SUB - PNDEROSATP 3115.00 115KV CKT 1	141	141	0.30173	101.8412	RDRUNNER 7345.00 (UPDATE LATER) 345/115/13.2KV TRANSFORMER CKT 1
FDNS	06ALL	0	25SP	G14_065	TO->FROM	PNDEROSATP 3115.00 - WHITTEN SUB 115KV CKT 1	141	141	0.3397	159.2753	HOBBS - KIOWA 7345.00 345KV CKT 1
FDNS	0	0	25SP	G14_065	TO->FROM	PNDEROSATP 3115.00 - WHITTEN SUB 115KV CKT 1	141	141	0.33953	158.352	HOBBS - KIOWA 7345.00 345KV CKT 1
FDNS	06ALL	0	25SP	G14_065	TO->FROM	PNDEROSATP 3115.00 - WHITTEN SUB 115KV CKT 1	141	141	0.3018	144.6795	KIOWA 7345.00 - RDRUNNER 7345.00 345KV CKT 1
FDNS	06ALL	0	25SP	G14_065	TO->FROM	PNDEROSATP 3115.00 - WHITTEN SUB 115KV CKT 1	141	141	0.3018	144.2987	RDRUNNER 7345.00 (UPDATE LATER) 345/115/13.2KV TRANSFORMER CKT 1
FDNS	0	0	25SP	G14_065	TO->FROM	PNDEROSATP 3115.00 - WHITTEN SUB 115KV CKT 1	141	141	0.30173	136.9702	KIOWA 7345.00 - RDRUNNER 7345.00 345KV CKT 1
FDNS	0	0	25SP	G14_065	TO->FROM	PNDEROSATP 3115.00 - WHITTEN SUB 115KV CKT 1	141	141	0.30173	136.5255	RDRUNNER 7345.00 (UPDATE LATER) 345/115/13.2KV TRANSFORMER CKT 1

SOLUTION	GROUP	SCENARIO	SEASON	SOURCE	DIRECTION	MONITORED ELEMENT	RATEA (MVA)	RATEB(MVA)	TDF	TC%LOADING (% MVA)	CONTINGENCY
FDNS	06ALL	0	20SP	G14_065	TO->FROM	PNDEROSATP 3115.00 - WHITTEN SUB 115KV CKT 1	141	141	0.33967	131.6087	HOBBS - KIOWA 7345.00 345KV CKT 1
FDNS	0	0	20SP	G14_065	TO->FROM	PNDEROSATP 3115.00 - WHITTEN SUB 115KV CKT 1	141	141	0.33953	130.2445	HOBBS - KIOWA 7345.00 345KV CKT 1
FDNS	06ALL	0	20SP	G14_065	TO->FROM	PNDEROSATP 3115.00 - WHITTEN SUB 115KV CKT 1	141	141	0.30178	125.4448	KIOWA 7345.00 - RDRUNNER 7345.00 345KV CKT 1
FDNS	06ALL	0	20SP	G14_065	TO->FROM	PNDEROSATP 3115.00 - WHITTEN SUB 115KV CKT 1	141	141	0.30178	125.1467	RDRUNNER 7345.00 (UPDATE LATER) 345/115/13.2KV TRANSFORMER CKT 1
FDNS	0	0	20SP	G14_065	TO->FROM	PNDEROSATP 3115.00 - WHITTEN SUB 115KV CKT 1	141	141	0.30173	117.8671	KIOWA 7345.00 - RDRUNNER 7345.00 345KV CKT 1
FDNS	0	0	20SP	G14_065	TO->FROM	PNDEROSATP 3115.00 - WHITTEN SUB 115KV CKT 1	141	141	0.30173	117.542	RDRUNNER 7345.00 (UPDATE LATER) 345/115/13.2KV TRANSFORMER CKT 1
FDNS	06ALL	0	25SP	G14_065	TO->FROM	PNDEROSATP 3115.00 - WHITTEN SUB 115KV CKT 1	141	141	0.39006	117.0593	HOBBS (UPDATE DATA) 345/230/13.2KV TRANSFORMER CKT 1
FDNS	06ALL	0	25SP	G14_065	TO->FROM	PNDEROSATP 3115.00 - WHITTEN SUB 115KV CKT 1	141	141	0.39474	114.9649	LAGARTO 3115.00 - National Enrichment Plant Tap 115KV CKT 1
FDNS	06ALL	0	25SP	G14_065	TO->FROM	PNDEROSATP 3115.00 - WHITTEN SUB 115KV CKT 1	141	141	0.39474	107.7523	LAGARTO 3115.00 - SAGE_BRUSH 3115.00 115KV CKT 1
FDNS	06ALL	0	20WP	G14_065	TO->FROM	PNDEROSATP 3115.00 - WHITTEN SUB 115KV CKT 1	156	156	0.33971	107.7257	HOBBS - KIOWA 7345.00 345KV CKT 1
FDNS	0	0	20WP	G14_065	TO->FROM	PNDEROSATP 3115.00 - WHITTEN SUB 115KV CKT 1	156	156	0.33959	107.4329	HOBBS - KIOWA 7345.00 345KV CKT 1
FDNS	06ALL	0	20WP	G14_065	TO->FROM	PNDEROSATP 3115.00 - WHITTEN SUB 115KV CKT 1	156	156	0.30177	106.3979	KIOWA 7345.00 - RDRUNNER 7345.00 345KV CKT 1
FDNS	06ALL	0	20WP	G14_065	TO->FROM	PNDEROSATP 3115.00 - WHITTEN SUB 115KV CKT 1	156	156	0.30177	106.1612	RDRUNNER 7345.00 (UPDATE LATER) 345/115/13.2KV TRANSFORMER CKT 1
FDNS	06ALL	0	25SP	G14_065	TO->FROM	PNDEROSATP 3115.00 - WHITTEN SUB 115KV CKT 1	141	141	0.37032	105.6621	LIVSTNRIDGE3115.00 - WIPP SUB 115KV CKT 1
FDNS	06ALL	0	25SP	G14_065	TO->FROM	PNDEROSATP 3115.00 - WHITTEN SUB 115KV CKT 1	141	141	0.37623	105.5404	INTREPDW_TP3115.00 - POTASH JUNCTION INTERCHANGE 115KV CKT 1
FDNS	06ALL	0	25SP	G14_065	TO->FROM	PNDEROSATP 3115.00 - WHITTEN SUB 115KV CKT 1	141	141	0.56511	105.132	SPP-SWPS-T85
FDNS	06ALL	0	25SP	G14_065	TO->FROM	PNDEROSATP 3115.00 - WHITTEN SUB 115KV CKT 1	141	141	0.38186	104.5248	DOLLARHIDE SUB - TOBOSOFLATS3115.00 115KV CKT 1
FDNS	06ALL	0	20SP	G14_065	TO->FROM	PNDEROSATP 3115.00 - WHITTEN SUB 115KV CKT 1	141	141	0.39	104.3962	HOBBS (UPDATE DATA) 345/230/13.2KV TRANSFORMER CKT 1
FDNS	06ALL	0	25SP	G14_065	TO->FROM	PNDEROSATP 3115.00 - WHITTEN SUB 115KV CKT 1	141	141	0.37032	104.353	SAND DUNES SUB - WIPP SUB 115KV CKT 1
FDNS	06ALL	0	25SP	G14_065	TO->FROM	PNDEROSATP 3115.00 - WHITTEN SUB 115KV CKT 1	141	141	0.37623	104.2064	IMC_#1_TP 3115.00 - INTREPDW_TP3115.00 115KV CKT 1
FDNS	06ALL	0	25SP	G14_065	TO->FROM	PNDEROSATP 3115.00 - WHITTEN SUB 115KV CKT 1	141	141	0.38098	104.1332	KIOWA 7345.00 - NLOV_PLT 7345.00 345KV CKT 1
FDNS	06ALL	0	25SP	G14_065	TO->FROM	PNDEROSATP 3115.00 - WHITTEN SUB 115KV CKT 1	141	141	0.38204	103.4242	CUNNINGHAM STATION - POTASH JUNCTION INTERCHANGE 230KV CKT 1
FDNS	06ALL	0	25SP	G14_065	TO->FROM	PNDEROSATP 3115.00 - WHITTEN SUB 115KV CKT 1	141	141	0.37623	103.1939	IMC_#1_TP 3115.00 - LIVSTNRIDGE3115.00 115KV CKT 1
FDNS	06ALL	0	25SP	G14_065	TO->FROM	PNDEROSATP 3115.00 - WHITTEN SUB 115KV CKT 1	141	141	0.37527	103.1919	CHINA_DRAW 3115.00 - WOOD_DRAW 3115.00 115KV CKT 1
FDNS	06ALL	0	25SP	G14_065	TO->FROM	PNDEROSATP 3115.00 - WHITTEN SUB 115KV CKT 1	141	141	0.37945	103.1516	POTASH JUNCTION INTERCHANGE (UPDATE LATER) 230/115/13.2KV TRANSFORMER CKT 1
FDNS	06ALL	0	25SP	G14_065	TO->FROM	PNDEROSATP 3115.00 - WHITTEN SUB 115KV CKT 1	141	141	0.38019	103.0339	CHINA_DRAW 7345.00 - NLOV_PLT 7345.00 345KV CKT 1
FDNS	06ALL	0	25SP	G14_065	TO->FROM	PNDEROSATP 3115.00 - WHITTEN SUB 115KV CKT 1	141	141	0.38019	102.8784	CHINA_DRAW 7345.00 (UPDATE LATER) 345/115/13.2KV TRANSFORMER CKT 1
FDNS	06ALL	0	25SP	G14_065	TO->FROM	PNDEROSATP 3115.00 - WHITTEN SUB 115KV CKT 1	141	141	0.36841	101.9627	HOBBS - YOAKUM_345 345.00 345KV CKT 1
FDNS	06ALL	0	25SP	G14_065	TO->FROM	PNDEROSATP 3115.00 - WHITTEN SUB 115KV CKT 1	141	141	0.3822	101.0218	CUNNINGHAM STATION - QUAHADA 3115.00 115KV CKT 1
FDNS	06ALL	0	25SP	G14_065	TO->FROM	PNDEROSATP 3115.00 - WHITTEN SUB 115KV CKT 1	141	141	0.38242	100.8929	PCA INTERCHANGE - QUAHADA 3115.00 115KV CKT 1
FDNS	06ALL	0	25SP	G14_065	TO->FROM	PNDEROSATP 3115.00 - WHITTEN SUB 115KV CKT 1	141	141	0.38188	100.6319	MADDOX STATION - PEARL SUB 115KV CKT 1
FDNS	06ALL	0	25SP	G14_065	TO->FROM	PNDEROSATP 3115.00 - WHITTEN SUB 115KV CKT 1	141	141	0.39474	100.6032	LIVSTNRIDGE3115.00 - SAGE_BRUSH 3115.00 115KV CKT 1
FDNS	06ALL	0	25SP	G14_065	TO->FROM	PNDEROSATP 3115.00 - WHITTEN SUB 115KV CKT 1	141	141	0.38193	100.5024	SPP-SWPS-T14
FDNS	06ALL	0	25SP	G14_065	TO->FROM	PNDEROSATP 3115.00 - WHITTEN SUB 115KV CKT 1	141	141	0.38186	100.4674	GEN562637 1-ASGI14_010_213.000
FDNS	0	0	20WP	G14_065	TO->FROM	PNDEROSATP 3115.00 - WHITTEN SUB 115KV CKT 1	156	156	0.30179	100	KIOWA 7345.00 - RDRUNNER 7345.00 345KV CKT 1
FDNS	0	0	20WP	G14_065	TO->FROM	PNDEROSATP 3115.00 - WHITTEN SUB 115KV CKT 1	156	156	0.30179	99.7	RDRUNNER 7345.00 (UPDATE LATER) 345/115/13.2KV TRANSFORMER CKT 1
FDNS	06ALL	0	20SP	G14_065	TO->FROM	PNDEROSATP 3115.00 - WHITTEN SUB 115KV CKT 1	141	141	0.3947	99.5	LAGARTO 3115.00 - National Enrichment Plant Tap 115KV CKT 1
FDNS	06ALL	0	15SP	G14_065	FROM->TO	SUNDOWN INTERCHANGE - WOLFFORTH INTERCHANGE 230KV CKT 1	319	351	0.24945	127.2931	TOLK STATION EAST - TUCO INTERCHANGE 230KV CKT 1
FDNS	06ALL	0	15SP	G14_065	FROM->TO	SUNDOWN INTERCHANGE - WOLFFORTH INTERCHANGE 230KV CKT 1	319	351	0.22555	107.2174	NEWHART 230 - PLANT X STATION 230KV CKT 1
FDNS	06ALL	0	15G	G14_065	FROM->TO	SUNDOWN INTERCHANGE - WOLFFORTH INTERCHANGE 230KV CKT 1	319	351	0.26079	104.1935	TERRY COUNTY INTERCHANGE - WOLFFORTH INTERCHANGE 115KV CKT 1
FDNS	06ALL	0	15SP	G14_065	FROM->TO	SUNDOWN INTERCHANGE - WOLFFORTH INTERCHANGE 230KV CKT 1	319	351	0.26425	100.5801	TERRY COUNTY INTERCHANGE - WOLFFORTH INTERCHANGE 115KV CKT 1
FDNS	06ALL	0	15SP	G14_065	FROM->TO	SUNDOWN INTERCHANGE - WOLFFORTH INTERCHANGE 230KV CKT 1	319	351	0.21377	100.4541	DEAF SMITH COUNTY INTERCHANGE - G14-068T 230.00 230KV CKT 1
FDNS	06ALL	0	15G	G14_065	FROM->TO	TERRY COUNTY INTERCHANGE - WOLFFORTH INTERCHANGE 115KV CKT 1	120	154	0.11238	108.5207	BASE CASE
FDNS	06ALL	0	15SP	G14_065	FROM->TO	TOLK STATION EAST - TUCO INTERCHANGE 230KV CKT 1	478	502	0.22184	117.9185	NEWHART 230 - PLANT X STATION 230KV CKT 1
FDNS	06ALL	0	15SP	G14_065	FROM->TO	TOLK STATION EAST - TUCO INTERCHANGE 230KV CKT 1	478	502	0.20273	110.5721	DEAF SMITH COUNTY INTERCHANGE - G14-068T 230.00 230KV CKT 1
FDNS	06ALL	0	15SP	G14_065	FROM->TO	TOLK STATION EAST - TUCO INTERCHANGE 230KV CKT 1	478	502	0.23651	108.8842	SUNDOWN INTERCHANGE - WOLFFORTH INTERCHANGE 230KV CKT 1
FDNS	06ALL	0	15SP	G14_065	FROM->TO	TOLK STATION EAST - TUCO INTERCHANGE 230KV CKT 1	478	502	0.22887	102.2896	LUBBOCK SOUTH INTERCHANGE - WOLFFORTH INTERCHANGE 230KV CKT 1
FDNS	06ALL	0	15SP	G14_065	FROM->TO	TOLK STATION EAST - TUCO INTERCHANGE 230KV CKT 1	478	502	0.20472	102.1725	BUSHLAND INTERCHANGE - DEAF SMITH COUNTY INTERCHANGE 230KV CKT 1
FDNS	06ALL	0	15SP	G14_065	FROM->TO	TUCO INTERCHANGE - TUCO_2 230.00 230KV CKT 1	478	502	0.26485	171.3069	TUCO INTERCHANGE - TUCO_2 345.00 345KV CKT 1
FDNS	06ALL	0	15WP	G14_065	FROM->TO	TUCO INTERCHANGE - TUCO_2 230.00 230KV CKT 1	557	557	0.27012	134.3573	TUCO INTERCHANGE - TUCO_2 345.00 345KV CKT 1
FDNS	06ALL	0	15SP	G14_065	FROM->TO	TUCO INTERCHANGE - TUCO_2 230.00 230KV CKT 1	478	502	0.22484	117.2904	TUCO INTERCHANGE (GE M1022338) 345/230/13.2KV TRANSFORMER CKT 1
FDNS	06ALL	0	15SP	G14_065	FROM->TO	TUCO INTERCHANGE - TUCO_2 230.00 230KV CKT 1	478	502	0.20912	109.6173	TUCO INTERCHANGE (SIEM 8743066) 345/230/13.2KV TRANSFORMER CKT 2
FDNS	06ALL	0	15WP	G14_065	FROM->TO	TUCO INTERCHANGE - TUCO_2 230.00 230KV CKT 1	557	557	0.22941	104.677	TUCO INTERCHANGE (GE M1022338) 345/230/13.2KV TRANSFORMER CKT 1
FDNS	06ALL	0	20SP	G14_065	FROM->TO	TUCO INTERCHANGE - TUCO_2 230.00 230KV CKT 1	478	502	0.26061	101.2947	TUCO INTERCHANGE - TUCO_2 345.00 345KV CKT 1
FDNS	06ALL	0	15WP	G14_065	FROM->TO	TUCO INTERCHANGE (GE M1022338) 345/230/13.2KV TRANSFORMER CKT 1	560	560	0.27676	123.6189	TUCO INTERCHANGE (SIEM 8743066) 345/230/13.2KV TRANSFORMER CKT 2
FDNS	06ALL	0	15WP	G14_065	FROM->TO	TUCO INTERCHANGE (GE M1022338) 345/230/13.2KV TRANSFORMER CKT 1	560	560	0.27676	121.7966	TUCO INTERCHANGE (SIEM 8743066) 345/230/13.2KV TRANSFORMER CKT 2
FDNS	06ALL	0	15WP	G14_065	FROM->TO	TUCO INTERCHANGE (GE M1022338) 345/230/13.2KV TRANSFORMER CKT 1	560	560	0.26932	120.4848	TUCO_2 345.00 (TUCO_2 XFMR) 345/230/13.2KV TRANSFORMER CKT 1
FDNS	06ALL	0	15WP	G14_065	FROM->TO	TUCO INTERCHANGE (GE M1022338) 345/230/13.2KV TRANSFORMER CKT 1	560	560	0.26932	118.8811	TUCO_2 345.00 (TUCO_2 XFMR) 345/230/13.2KV TRANSFORMER CKT 1
FDNS	06ALL	0	15SP	G14_065	FROM->TO	TUCO INTERCHANGE (GE M1022338) 345/230/13.2KV TRANSFORMER CKT 1	560	560	0.27046	113.3311	TUCO INTERCHANGE (SIEM 8743066) 345/230/13.2KV TRANSFORMER CKT 2
FDNS	06ALL	0	15WP	G14_065	FROM->TO	TUCO INTERCHANGE (GE M1022338) 345/230/13.2KV TRANSFORMER CKT 1	560	560	0.25306	112.9697	TUCO INTERCHANGE - TUCO_2 230.00 230KV CKT 1
FDNS	06ALL	0	15WP	G14_065	FROM->TO	TUCO INTERCHANGE (GE M1022338) 345/230/13.2KV TRANSFORMER CKT 1	560	560	0.25306	111.3776	TUCO INTERCHANGE - TUCO_2 230.00 230KV CKT 1
FDNS	06ALL	0	15SP	G14_065	FROM->TO	TUCO INTERCHANGE (GE M1022338) 345/230/13.2KV TRANSFORMER CKT 1	560	560	0.27046	111.3719	TUCO INTERCHANGE (SIEM 8743066) 345/230/13.2KV TRANSFORMER CKT 2
FDNS	06ALL	0	15SP	G14_065	FROM->TO	TUCO INTERCHANGE (GE M1022338) 345/230/13.2KV TRANSFORMER CKT 1	560	560	0.26312	110.0342	TUCO_2 345.00 (TUCO_2 XFMR) 345/230/13.2KV TRANSFORMER CKT 1
FDNS	06ALL	0	15SP	G14_065	FROM->TO	TUCO INTERCHANGE (GE M1022338) 345/230/13.2KV TRANSFORMER CKT 1	560	560	0.26312	108.332	TUCO_2 345.00 (TUCO_2 XFMR) 345/230/13.2KV TRANSFORMER CKT 1
FDNS	06ALL	0	15SP	G14_065	FROM->TO	TUCO INTERCHANGE (GE M1022338) 345/230/13.2KV TRANSFORMER CKT 1	560	560	0.24759	107.9073	TUCO INTERCHANGE - TUCO_2 230.00 230KV CKT 1
FDNS	06ALL	0	15SP	G14_065	FROM->TO	TUCO INTERCHANGE (GE M1022338) 345/230/13.2KV TRANSFORMER CKT 1	560	560	0.24759	105.9346	TUCO INTERCHANGE - TUCO_2 230.00 230KV CKT 1
FDNS	06ALL	0	15SP	G14_065	FROM->TO	TUCO_2 345.00 (TUCO_2 XFMR) 345/230/13.2KV TRANSFORMER CKT 1	560	560	0.28246	145.8188	TUCO INTERCHANGE - TUCO_2 345.00 345KV CKT 1
FDNS	06ALL	0	15SP	G14_065	FROM->TO	TUCO_2 345.00 (TUCO_2 XFMR) 345/230/13.2KV TRANSFORMER CKT 1	560	560	0.28246	142.7342	TUCO INTERCHANGE - TUCO_2 345.00 345KV CKT 1
FDNS	06ALL	0	15WP	G14_065	FROM->TO	TUCO_2 345.00 (TUCO_2 XFMR) 345/230/13.2KV TRANSFORMER CKT 1	560	560	0.28894	138.8622	TUCO INTERCHANGE - TUCO_2 345.00 345KV CKT 1
FDNS	06ALL	0	15WP	G14_065	FROM->TO	TUCO_2 345.00 (TUCO_2 XFMR) 345/230/13.2KV TRANSFORMER CKT 1	560	560	0.28894	136.3817	TUCO INTERCHANGE - TUCO_2 345.00 345KV CKT 1
FDNS	06ALL	0	15WP	G14_065	FROM->TO	TUCO_2 345.00 (TUCO_2 XFMR) 345/230/13.2KV TRANSFORMER CKT 1	560	560	0.24573	109.7547	TUCO INTERCHANGE (GE M1022338) 345/230/13.2KV TRANSFORMER CKT 1
FDNS	06ALL	0	15WP	G14_065	FROM->TO	TUCO_2 345.00 (TUCO_2 XFMR) 345/230/13.2KV TRANSFORMER CKT 1	560	560	0.24573	108.6761	TUCO INTERCHANGE (GE M1022338) 345/230/13.2KV TRANSFORMER CKT 1
FDNS	06ALL	0	15WP	G14_065	FROM->TO	TUCO_2 345.00 (TUCO_2 XFMR) 345/230/13.2KV TRANSFORMER CKT 1	560	560	0.23007	102.7663	TUCO INTERCHANGE (SIEM 8743066) 345/230/13.2KV TRANSFORMER CKT 2
FDNS	06ALL	0	15WP	G14_065	FROM->TO	TUCO_2 345.00 (TUCO_2 XFMR) 345/230/13.2KV TRANSFORMER CKT 1	560	560	0.23007	101.7947	TUCO INTERCHANGE (SIEM 8743066) 345/230/13.2KV TRANSFORMER CKT 2
FDNS	06ALL	0	15SP	G14_065	FROM->TO	TUCO_2 345.00 (TUCO_2 XFMR) 345/230/13.2KV TRANSFORMER CKT 1	560	560	0.24	99.6	TUCO INTERCHANGE (GE M1022338) 345/230/13.2KV TRANSFORMER CKT 1

SOLUTION	GROUP	SCENARIO	SEASON	SOURCE	DIRECTION	MONITORED ELEMENT	RATEA (MVA)	RATEB(MVA)	TDF	TC%LOADING (% MVA)	CONTINGENCY
FDNS	06ALL	2	15G	G14_065	TO->FROM	AMOCO SWITCHING STATION - YOAKUM COUNTY INTERCHANGE 230KV CKT 1	319	351	0.25937	99.7	TUCO INTERCHANGE - YOAKUM_345 345.00 345KV CKT 1
FDNS	06ALL	2	15SP	G14_065	FROM->TO	ELK CITY 230KV (ELKCTY-6) 230/138/13.8KV TRANSFORMER CKT 1	272	316	0.06364	125.7818	BASE CASE
FDNS	06ALL	2	15SP	G14_065	FROM->TO	ELK CITY 230KV (ELKCTY-6) 230/138/13.8KV TRANSFORMER CKT 1	272	316	0.06364	124.4125	BASE CASE
FDNS	06ALL	2	15G	G14_065	FROM->TO	ELK CITY 230KV (ELKCTY-6) 230/138/13.8KV TRANSFORMER CKT 1	287	316	0.05922	111.2694	BASE CASE
FDNS	06ALL	2	15G	G14_065	FROM->TO	ELK CITY 230KV (ELKCTY-6) 230/138/13.8KV TRANSFORMER CKT 1	287	316	0.05922	110.3238	BASE CASE
FDNS	06ALL	2	15WP	G14_065	FROM->TO	ELK CITY 230KV (ELKCTY-6) 230/138/13.8KV TRANSFORMER CKT 1	287	316	0.06541	107.6385	BASE CASE
FDNS	06ALL	2	15WP	G14_065	FROM->TO	ELK CITY 230KV (ELKCTY-6) 230/138/13.8KV TRANSFORMER CKT 1	287	316	0.06541	106.6339	BASE CASE
FDNS	06ALL	2	20SP	G14_065	FROM->TO	ELK CITY 230KV (ELKCTY-6) 230/138/13.8KV TRANSFORMER CKT 1	272	316	0.06381	103.949	BASE CASE
FDNS	06ALL	2	20SP	G14_065	FROM->TO	ELK CITY 230KV (ELKCTY-6) 230/138/13.8KV TRANSFORMER CKT 1	272	316	0.06381	103.7414	BASE CASE
FDNS	06ALL	2	20WP	G14_065	FROM->TO	ELK CITY 230KV (ELKCTY-6) 230/138/13.8KV TRANSFORMER CKT 1	287	316	0.06306	101.967	BASE CASE
FDNS	06ALL	2	20WP	G14_065	FROM->TO	ELK CITY 230KV (ELKCTY-6) 230/138/13.8KV TRANSFORMER CKT 1	287	316	0.06306	101.2457	BASE CASE
FDNS	06ALL	2	25SP	G14_065	TO->FROM	OCHOA SUB - PNDEROSATP 3115.00 115KV CKT 1	141	141	0.33945	137.6189	HOBBS - KIOWA 7345.00 345KV CKT 1
FDNS	06ALL	2	25SP	G14_065	TO->FROM	OCHOA SUB - PNDEROSATP 3115.00 115KV CKT 1	141	141	0.3018	123.1497	KIOWA 7345.00 - RDRUNNER 7345.00 345KV CKT 1
FDNS	06ALL	2	25SP	G14_065	TO->FROM	OCHOA SUB - PNDEROSATP 3115.00 115KV CKT 1	141	141	0.3018	122.7478	RDRUNNER 7345.00 (UPDATE LATER) 345/115/13.2KV TRANSFORMER CKT 1
FDNS	06ALL	2	20SP	G14_065	TO->FROM	OCHOA SUB - PNDEROSATP 3115.00 115KV CKT 1	141	141	0.33941	115.0351	HOBBS - KIOWA 7345.00 345KV CKT 1
FDNS	06ALL	2	20SP	G14_065	TO->FROM	OCHOA SUB - PNDEROSATP 3115.00 115KV CKT 1	141	141	0.30178	109.1798	KIOWA 7345.00 - RDRUNNER 7345.00 345KV CKT 1
FDNS	06ALL	2	20SP	G14_065	TO->FROM	OCHOA SUB - PNDEROSATP 3115.00 115KV CKT 1	141	141	0.30178	108.8793	RDRUNNER 7345.00 (UPDATE LATER) 345/115/13.2KV TRANSFORMER CKT 1
FDNS	06ALL	2	25SP	G14_065	TO->FROM	PNDEROSATP 3115.00 - WHITTEN SUB 115KV CKT 1	141	141	0.33945	159.0791	HOBBS - KIOWA 7345.00 345KV CKT 1
FDNS	06ALL	2	25SP	G14_065	TO->FROM	PNDEROSATP 3115.00 - WHITTEN SUB 115KV CKT 1	141	141	0.3018	144.6743	KIOWA 7345.00 - RDRUNNER 7345.00 345KV CKT 1
FDNS	06ALL	2	25SP	G14_065	TO->FROM	PNDEROSATP 3115.00 - WHITTEN SUB 115KV CKT 1	141	141	0.3018	144.2793	RDRUNNER 7345.00 (UPDATE LATER) 345/115/13.2KV TRANSFORMER CKT 1
FDNS	06ALL	2	20SP	G14_065	TO->FROM	PNDEROSATP 3115.00 - WHITTEN SUB 115KV CKT 1	141	141	0.33941	131.2348	HOBBS - KIOWA 7345.00 345KV CKT 1
FDNS	06ALL	2	20SP	G14_065	TO->FROM	PNDEROSATP 3115.00 - WHITTEN SUB 115KV CKT 1	141	141	0.30178	125.4162	KIOWA 7345.00 - RDRUNNER 7345.00 345KV CKT 1
FDNS	06ALL	2	20SP	G14_065	TO->FROM	PNDEROSATP 3115.00 - WHITTEN SUB 115KV CKT 1	141	141	0.30178	125.119	RDRUNNER 7345.00 (UPDATE LATER) 345/115/13.2KV TRANSFORMER CKT 1
FDNS	06ALL	2	25SP	G14_065	TO->FROM	PNDEROSATP 3115.00 - WHITTEN SUB 115KV CKT 1	141	141	0.39031	117.2694	HOBBS (UPDATE DATA) 345/230/13.2KV TRANSFORMER CKT 1
FDNS	06ALL	2	25SP	G14_065	TO->FROM	PNDEROSATP 3115.00 - WHITTEN SUB 115KV CKT 1	141	141	0.39478	114.9833	LAGARTO 3115.00 - National Enrichment Plant Tap 115KV CKT 1
FDNS	06ALL	2	25SP	G14_065	TO->FROM	PNDEROSATP 3115.00 - WHITTEN SUB 115KV CKT 1	141	141	0.39478	107.7702	LAGARTO 3115.00 - SAGE_BRUSH 3115.00 115KV CKT 1
FDNS	06ALL	2	20WP	G14_065	TO->FROM	PNDEROSATP 3115.00 - WHITTEN SUB 115KV CKT 1	156	156	0.33945	107.3535	HOBBS - KIOWA 7345.00 345KV CKT 1
FDNS	06ALL	2	20WP	G14_065	TO->FROM	PNDEROSATP 3115.00 - WHITTEN SUB 115KV CKT 1	156	156	0.30177	106.3507	KIOWA 7345.00 - RDRUNNER 7345.00 345KV CKT 1
FDNS	06ALL	2	20WP	G14_065	TO->FROM	PNDEROSATP 3115.00 - WHITTEN SUB 115KV CKT 1	156	156	0.30177	106.118	RDRUNNER 7345.00 (UPDATE LATER) 345/115/13.2KV TRANSFORMER CKT 1
FDNS	06ALL	2	25SP	G14_065	TO->FROM	PNDEROSATP 3115.00 - WHITTEN SUB 115KV CKT 1	141	141	0.37038	105.6998	LIVSTNRIDGE3115.00 - WIPP SUB 115KV CKT 1
FDNS	06ALL	2	25SP	G14_065	TO->FROM	PNDEROSATP 3115.00 - WHITTEN SUB 115KV CKT 1	141	141	0.37628	105.5595	INTREPDW_TP3115.00 - POTASH JUNCTION INTERCHANGE 115KV CKT 1
FDNS	06ALL	2	25SP	G14_065	TO->FROM	PNDEROSATP 3115.00 - WHITTEN SUB 115KV CKT 1	141	141	0.56514	105.1488	SPP-SWPS-T85
FDNS	06ALL	2	20SP	G14_065	TO->FROM	PNDEROSATP 3115.00 - WHITTEN SUB 115KV CKT 1	141	141	0.39025	104.6682	HOBBS (UPDATE DATA) 345/230/13.2KV TRANSFORMER CKT 1
FDNS	06ALL	2	25SP	G14_065	TO->FROM	PNDEROSATP 3115.00 - WHITTEN SUB 115KV CKT 1	141	141	0.3819	104.5401	DOLLARHIDE SUB - TOBOSOFLATS3115.00 115KV CKT 1
FDNS	06ALL	2	25SP	G14_065	TO->FROM	PNDEROSATP 3115.00 - WHITTEN SUB 115KV CKT 1	141	141	0.37038	104.3908	SAND DUNES SUB - WIPP SUB 115KV CKT 1
FDNS	06ALL	2	25SP	G14_065	TO->FROM	PNDEROSATP 3115.00 - WHITTEN SUB 115KV CKT 1	141	141	0.37628	104.2258	IMC_#1_TP 3115.00 - INTREPDW_TP3115.00 115KV CKT 1
FDNS	06ALL	2	25SP	G14_065	TO->FROM	PNDEROSATP 3115.00 - WHITTEN SUB 115KV CKT 1	141	141	0.38101	104.1421	KIOWA 7345.00 - NLOV_PLT 7345.00 345KV CKT 1
FDNS	06ALL	2	25SP	G14_065	TO->FROM	PNDEROSATP 3115.00 - WHITTEN SUB 115KV CKT 1	141	141	0.38205	103.4122	CUNNINGHAM STATION - POTASH JUNCTION INTERCHANGE 230KV CKT 1
FDNS	06ALL	2	25SP	G14_065	TO->FROM	PNDEROSATP 3115.00 - WHITTEN SUB 115KV CKT 1	141	141	0.37531	103.2144	CHINA_DRAW 3115.00 - WOOD_DRAW 3115.00 115KV CKT 1
FDNS	06ALL	2	25SP	G14_065	TO->FROM	PNDEROSATP 3115.00 - WHITTEN SUB 115KV CKT 1	141	141	0.37628	103.2136	IMC_#1_TP 3115.00 - LIVSTNRIDGE3115.00 115KV CKT 1
FDNS	06ALL	2	25SP	G14_065	TO->FROM	PNDEROSATP 3115.00 - WHITTEN SUB 115KV CKT 1	141	141	0.37952	103.1906	POTASH JUNCTION INTERCHANGE (UPDATE LATER) 230/115/13.2KV TRANSFORMER CKT 1
FDNS	06ALL	2	25SP	G14_065	TO->FROM	PNDEROSATP 3115.00 - WHITTEN SUB 115KV CKT 1	141	141	0.38023	103.0518	CHINA_DRAW 7345.00 - NLOV_PLT 7345.00 345KV CKT 1
FDNS	06ALL	2	25SP	G14_065	TO->FROM	PNDEROSATP 3115.00 - WHITTEN SUB 115KV CKT 1	141	141	0.38023	102.8866	CHINA_DRAW 7345.00 (UPDATE LATER) 345/115/13.2KV TRANSFORMER CKT 1
FDNS	06ALL	2	25SP	G14_065	TO->FROM	PNDEROSATP 3115.00 - WHITTEN SUB 115KV CKT 1	141	141	0.36829	101.8551	HOBBS - YOAKUM_345 345.00 345KV CKT 1
FDNS	06ALL	2	25SP	G14_065	TO->FROM	PNDEROSATP 3115.00 - WHITTEN SUB 115KV CKT 1	141	141	0.38224	101.0405	CUNNINGHAM STATION - QUAHADA 3115.00 115KV CKT 1
FDNS	06ALL	2	25SP	G14_065	TO->FROM	PNDEROSATP 3115.00 - WHITTEN SUB 115KV CKT 1	141	141	0.38245	100.8958	PCA INTERCHANGE - QUAHADA 3115.00 115KV CKT 1
FDNS	06ALL	2	25SP	G14_065	TO->FROM	PNDEROSATP 3115.00 - WHITTEN SUB 115KV CKT 1	141	141	0.38192	100.6523	MADDOX STATION - PEARL SUB 115KV CKT 1
FDNS	06ALL	2	25SP	G14_065	TO->FROM	PNDEROSATP 3115.00 - WHITTEN SUB 115KV CKT 1	141	141	0.39478	100.621	LIVSTNRIDGE3115.00 - SAGE_BRUSH 3115.00 115KV CKT 1
FDNS	06ALL	2	25SP	G14_065	TO->FROM	PNDEROSATP 3115.00 - WHITTEN SUB 115KV CKT 1	141	141	0.38197	100.5183	SPP-SWPS-T14
FDNS	06ALL	2	25SP	G14_065	TO->FROM	PNDEROSATP 3115.00 - WHITTEN SUB 115KV CKT 1	141	141	0.3819	100.4892	GEN562637 1-ASGI14_010_213.000
FDNS	06ALL	2	25SP	G14_065	TO->FROM	PNDEROSATP 3115.00 - WHITTEN SUB 115KV CKT 1	141	141	0.38119	100.4136	YOAKUM_345 345.00 (UPDATE DATA) 345/230/13.2KV TRANSFORMER CKT 1
FDNS	06ALL	2	20SP	G14_065	TO->FROM	PNDEROSATP 3115.00 - WHITTEN SUB 115KV CKT 1	141	141	0.39474	99.5	LAGARTO 3115.00 - National Enrichment Plant Tap 115KV CKT 1
FDNS	06ALL	2	15G	G14_065	FROM->TO	TUCO INTERCHANGE - TUCO_2 230.00 230KV CKT 1	478	502	0.32063	200.4231	TUCO INTERCHANGE - TUCO_2 345.00 345KV CKT 1
FDNS	06ALL	2	15SP	G14_065	FROM->TO	TUCO INTERCHANGE - TUCO_2 230.00 230KV CKT 1	478	502	0.32755	183.8625	TUCO INTERCHANGE - TUCO_2 345.00 345KV CKT 1
FDNS	06ALL	2	15WP	G14_065	FROM->TO	TUCO INTERCHANGE - TUCO_2 230.00 230KV CKT 1	557	557	0.33366	142.2485	TUCO INTERCHANGE - TUCO_2 345.00 345KV CKT 1
FDNS	06ALL	2	20SP	G14_065	FROM->TO	TUCO INTERCHANGE - TUCO_2 230.00 230KV CKT 1	478	502	0.3373	137.8459	TUCO INTERCHANGE - TUCO_2 345.00 345KV CKT 1
FDNS	06ALL	2	15G	G14_065	FROM->TO	TUCO_2 345.00 (TUCO_2 XFMR) 345/230/13.2KV TRANSFORMER CKT 1	560	560	0.28898	167.6169	TUCO INTERCHANGE - TUCO_2 345.00 345KV CKT 1
FDNS	06ALL	2	15G	G14_065	FROM->TO	TUCO_2 345.00 (TUCO_2 XFMR) 345/230/13.2KV TRANSFORMER CKT 1	560	560	0.28898	164.2629	TUCO INTERCHANGE - TUCO_2 345.00 345KV CKT 1
FDNS	06ALL	2	15SP	G14_065	FROM->TO	TUCO_2 345.00 (TUCO_2 XFMR) 345/230/13.2KV TRANSFORMER CKT 1	560	560	0.29611	149.8147	TUCO INTERCHANGE - TUCO_2 345.00 345KV CKT 1
FDNS	06ALL	2	15SP	G14_065	FROM->TO	TUCO_2 345.00 (TUCO_2 XFMR) 345/230/13.2KV TRANSFORMER CKT 1	560	560	0.29611	147.216	TUCO INTERCHANGE - TUCO_2 345.00 345KV CKT 1
FDNS	06ALL	2	15WP	G14_065	FROM->TO	TUCO_2 345.00 (TUCO_2 XFMR) 345/230/13.2KV TRANSFORMER CKT 1	560	560	0.30251	141.8557	TUCO INTERCHANGE - TUCO_2 345.00 345KV CKT 1
FDNS	06ALL	2	15WP	G14_065	FROM->TO	TUCO_2 345.00 (TUCO_2 XFMR) 345/230/13.2KV TRANSFORMER CKT 1	560	560	0.30251	139.9334	TUCO INTERCHANGE - TUCO_2 345.00 345KV CKT 1
FDNS	06ALL	2	20SP	G14_065	FROM->TO	TUCO_2 345.00 (TUCO_2 XFMR) 345/230/13.2KV TRANSFORMER CKT 1	560	560	0.29852	112.3827	TUCO INTERCHANGE - TUCO_2 345.00 345KV CKT 1
FDNS	06ALL	2	20SP	G14_065	FROM->TO	TUCO_2 345.00 (TUCO_2 XFMR) 345/230/13.2KV TRANSFORMER CKT 1	560	560	0.29852	112.1069	TUCO INTERCHANGE - TUCO_2 345.00 345KV CKT 1
FDNS	06ALL	3	15SP	G14_065	FROM->TO	ELK CITY 230KV (ELKCTY-6) 230/138/13.8KV TRANSFORMER CKT 1	272	316	0.06205	123.9727	BASE CASE
FDNS	06ALL	3	15SP	G14_065	FROM->TO	ELK CITY 230KV (ELKCTY-6) 230/138/13.8KV TRANSFORMER CKT 1	272	316	0.06205	122.7526	BASE CASE
FDNS	06ALL	3	15G	G14_065	FROM->TO	ELK CITY 230KV (ELKCTY-6) 230/138/13.8KV TRANSFORMER CKT 1	287	316	0.05765	109.3338	BASE CASE
FDNS	06ALL	3	15G	G14_065	FROM->TO	ELK CITY 230KV (ELKCTY-6) 230/138/13.8KV TRANSFORMER CKT 1	287	316	0.05765	108.4212	BASE CASE
FDNS	06ALL	3	15WP	G14_065	FROM->TO	ELK CITY 230KV (ELKCTY-6) 230/138/13.8KV TRANSFORMER CKT 1	287	316	0.0638	106.1239	BASE CASE
FDNS	06ALL	3	15WP	G14_065	FROM->TO	ELK CITY 230KV (ELKCTY-6) 230/138/13.8KV TRANSFORMER CKT 1	287	316	0.0638	105.1628	BASE CASE
FDNS	06ALL	3	20SP	G14_065	FROM->TO	ELK CITY 230KV (ELKCTY-6) 230/138/13.8KV TRANSFORMER CKT 1	272	316	0.06219	102.7547	BASE CASE
FDNS	06ALL	3	20SP	G14_065	FROM->TO	ELK CITY 230KV (ELKCTY-6) 230/138/13.8KV TRANSFORMER CKT 1	272	316	0.06219	102.5743	BASE CASE
FDNS	06ALL	3	20WP	G14_065	FROM->TO	ELK CITY 230KV (ELKCTY-6) 230/138/13.8KV TRANSFORMER CKT 1	287	316	0.06149	100.8598	BASE CASE
FDNS	06ALL	3	20WP	G14_065	FROM->TO	ELK CITY 230KV (ELKCTY-6) 230/138/13.8KV TRANSFORMER CKT 1	287	316	0.06149	100.2492	BASE CASE
FDNS	06ALL	3	15G	G14_065	TO->FROM	GRAPEVINE INTERCHANGE - NICHOLS STATION 230KV CKT 1	319	351	0.05019	100.925	BASE CASE

SOLUTION	GROUP	SCENARIO	SEASON	SOURCE	DIRECTION	MONITORED ELEMENT	RATEA (MVA)	RATEB(MVA)	TDF	TC%LOADING (% MVA)	CONTINGENCY
FDNS	06ALL	3	25SP	G14_065	TO->FROM	OCHOA SUB - PNDEROSATP 3115.00 115KV CKT 1	141	141	0.34066	138.7078	HOBBS - KIOWA 7345.00 345KV CKT 1
FDNS	06ALL	3	25SP	G14_065	TO->FROM	OCHOA SUB - PNDEROSATP 3115.00 115KV CKT 1	141	141	0.302	123.3034	KIOWA 7345.00 - RDRUNNER 7345.00 345KV CKT 1
FDNS	06ALL	3	25SP	G14_065	TO->FROM	OCHOA SUB - PNDEROSATP 3115.00 115KV CKT 1	141	141	0.302	122.9204	RDRUNNER 7345.00 (UPDATE LATER) 345/115/13.2KV TRANSFORMER CKT 1
FDNS	06ALL	3	20SP	G14_065	TO->FROM	OCHOA SUB - PNDEROSATP 3115.00 115KV CKT 1	141	141	0.34061	116.5322	HOBBS - KIOWA 7345.00 345KV CKT 1
FDNS	06ALL	3	20SP	G14_065	TO->FROM	OCHOA SUB - PNDEROSATP 3115.00 115KV CKT 1	141	141	0.30197	109.3801	KIOWA 7345.00 - RDRUNNER 7345.00 345KV CKT 1
FDNS	06ALL	3	20SP	G14_065	TO->FROM	OCHOA SUB - PNDEROSATP 3115.00 115KV CKT 1	141	141	0.30197	109.0785	RDRUNNER 7345.00 (UPDATE LATER) 345/115/13.2KV TRANSFORMER CKT 1
FDNS	06ALL	3	25SP	G14_065	TO->FROM	PNDEROSATP 3115.00 - WHITTEN SUB 115KV CKT 1	141	141	0.34066	160.1698	HOBBS - KIOWA 7345.00 345KV CKT 1
FDNS	06ALL	3	25SP	G14_065	TO->FROM	PNDEROSATP 3115.00 - WHITTEN SUB 115KV CKT 1	141	141	0.302	144.8297	KIOWA 7345.00 - RDRUNNER 7345.00 345KV CKT 1
FDNS	06ALL	3	25SP	G14_065	TO->FROM	PNDEROSATP 3115.00 - WHITTEN SUB 115KV CKT 1	141	141	0.302	144.4532	RDRUNNER 7345.00 (UPDATE LATER) 345/115/13.2KV TRANSFORMER CKT 1
FDNS	06ALL	3	20SP	G14_065	TO->FROM	PNDEROSATP 3115.00 - WHITTEN SUB 115KV CKT 1	141	141	0.34061	132.7332	HOBBS - KIOWA 7345.00 345KV CKT 1
FDNS	06ALL	3	20SP	G14_065	TO->FROM	PNDEROSATP 3115.00 - WHITTEN SUB 115KV CKT 1	141	141	0.30197	125.6177	KIOWA 7345.00 - RDRUNNER 7345.00 345KV CKT 1
FDNS	06ALL	3	20SP	G14_065	TO->FROM	PNDEROSATP 3115.00 - WHITTEN SUB 115KV CKT 1	141	141	0.30197	125.3194	RDRUNNER 7345.00 (UPDATE LATER) 345/115/13.2KV TRANSFORMER CKT 1
FDNS	06ALL	3	25SP	G14_065	TO->FROM	PNDEROSATP 3115.00 - WHITTEN SUB 115KV CKT 1	141	141	0.38988	116.7231	HOBBS (UPDATE DATA) 345/230/13.2KV TRANSFORMER CKT 1
FDNS	06ALL	3	25SP	G14_065	TO->FROM	PNDEROSATP 3115.00 - WHITTEN SUB 115KV CKT 1	141	141	0.39494	115.0982	LAGARTO 3115.00 - National Enrichment Plant Tap 115KV CKT 1
FDNS	06ALL	3	20WP	G14_065	TO->FROM	PNDEROSATP 3115.00 - WHITTEN SUB 115KV CKT 1	156	156	0.34063	108.6677	HOBBS - KIOWA 7345.00 345KV CKT 1
FDNS	06ALL	3	25SP	G14_065	TO->FROM	PNDEROSATP 3115.00 - WHITTEN SUB 115KV CKT 1	141	141	0.39494	107.8903	LAGARTO 3115.00 - SAGE_BRUSH 3115.00 115KV CKT 1
FDNS	06ALL	3	20WP	G14_065	TO->FROM	PNDEROSATP 3115.00 - WHITTEN SUB 115KV CKT 1	156	156	0.30196	106.5203	KIOWA 7345.00 - RDRUNNER 7345.00 345KV CKT 1
FDNS	06ALL	3	20WP	G14_065	TO->FROM	PNDEROSATP 3115.00 - WHITTEN SUB 115KV CKT 1	156	156	0.30196	106.2869	RDRUNNER 7345.00 (UPDATE LATER) 345/115/13.2KV TRANSFORMER CKT 1
FDNS	06ALL	3	25SP	G14_065	TO->FROM	PNDEROSATP 3115.00 - WHITTEN SUB 115KV CKT 1	141	141	0.37042	105.7182	LIVSTNRIDGE3115.00 - WIPP SUB 115KV CKT 1
FDNS	06ALL	3	25SP	G14_065	TO->FROM	PNDEROSATP 3115.00 - WHITTEN SUB 115KV CKT 1	141	141	0.37636	105.6326	INTREPDW_TP3115.00 - POTASH JUNCTION INTERCHANGE 115KV CKT 1
FDNS	06ALL	3	25SP	G14_065	TO->FROM	PNDEROSATP 3115.00 - WHITTEN SUB 115KV CKT 1	141	141	0.56526	105.234	SPP-SWPS-T85
FDNS	06ALL	3	25SP	G14_065	TO->FROM	PNDEROSATP 3115.00 - WHITTEN SUB 115KV CKT 1	141	141	0.38201	104.6387	DOLLARHIDE SUB - TOBOSOFLATS3115.00 115KV CKT 1
FDNS	06ALL	3	25SP	G14_065	TO->FROM	PNDEROSATP 3115.00 - WHITTEN SUB 115KV CKT 1	141	141	0.37042	104.4114	SAND DUNES SUB - WIPP SUB 115KV CKT 1
FDNS	06ALL	3	25SP	G14_065	TO->FROM	PNDEROSATP 3115.00 - WHITTEN SUB 115KV CKT 1	141	141	0.37636	104.2991	IMC_#1_TP 3115.00 - INTREPDW_TP3115.00 115KV CKT 1
FDNS	06ALL	3	20SP	G14_065	TO->FROM	PNDEROSATP 3115.00 - WHITTEN SUB 115KV CKT 1	141	141	0.38983	104.2919	HOBBS (UPDATE DATA) 345/230/13.2KV TRANSFORMER CKT 1
FDNS	06ALL	3	25SP	G14_065	TO->FROM	PNDEROSATP 3115.00 - WHITTEN SUB 115KV CKT 1	141	141	0.38117	104.2682	KIOWA 7345.00 - NLOV_PLT 7345.00 345KV CKT 1
FDNS	06ALL	3	25SP	G14_065	TO->FROM	PNDEROSATP 3115.00 - WHITTEN SUB 115KV CKT 1	141	141	0.38233	103.6568	CUNNINGHAM STATION - POTASH JUNCTION INTERCHANGE 230KV CKT 1
FDNS	06ALL	3	25SP	G14_065	TO->FROM	PNDEROSATP 3115.00 - WHITTEN SUB 115KV CKT 1	141	141	0.37542	103.2934	CHINA_DRAW 3115.00 - WOOD_DRAW 3115.00 115KV CKT 1
FDNS	06ALL	3	25SP	G14_065	TO->FROM	PNDEROSATP 3115.00 - WHITTEN SUB 115KV CKT 1	141	141	0.37636	103.2863	IMC_#1_TP 3115.00 - LIVSTNRIDGE3115.00 115KV CKT 1
FDNS	06ALL	3	25SP	G14_065	TO->FROM	PNDEROSATP 3115.00 - WHITTEN SUB 115KV CKT 1	141	141	0.38035	103.1537	CHINA_DRAW 7345.00 - NLOV_PLT 7345.00 345KV CKT 1
FDNS	06ALL	3	25SP	G14_065	TO->FROM	PNDEROSATP 3115.00 - WHITTEN SUB 115KV CKT 1	141	141	0.37953	103.1162	POTASH JUNCTION INTERCHANGE (UPDATE LATER) 230/115/13.2KV TRANSFORMER CKT 1
FDNS	06ALL	3	25SP	G14_065	TO->FROM	PNDEROSATP 3115.00 - WHITTEN SUB 115KV CKT 1	141	141	0.38035	102.9978	CHINA_DRAW 7345.00 (UPDATE LATER) 345/115/13.2KV TRANSFORMER CKT 1
FDNS	06ALL	3	25SP	G14_065	TO->FROM	PNDEROSATP 3115.00 - WHITTEN SUB 115KV CKT 1	141	141	0.36896	102.3824	HOBBS - YOAKUM_345 345.00 345KV CKT 1
FDNS	06ALL	3	25SP	G14_065	TO->FROM	PNDEROSATP 3115.00 - WHITTEN SUB 115KV CKT 1	141	141	0.38238	101.1409	CUNNINGHAM STATION - QUAHADA 3115.00 115KV CKT 1
FDNS	06ALL	3	25SP	G14_065	TO->FROM	PNDEROSATP 3115.00 - WHITTEN SUB 115KV CKT 1	141	141	0.38264	101.0768	PCA INTERCHANGE - QUAHADA 3115.00 115KV CKT 1
FDNS	06ALL	3	25SP	G14_065	TO->FROM	PNDEROSATP 3115.00 - WHITTEN SUB 115KV CKT 1	141	141	0.39494	100.7614	LIVSTNRIDGE3115.00 - SAGE_BRUSH 3115.00 115KV CKT 1
FDNS	06ALL	3	25SP	G14_065	TO->FROM	PNDEROSATP 3115.00 - WHITTEN SUB 115KV CKT 1	141	141	0.38205	100.7404	MADDOX STATION - PEARL SUB 115KV CKT 1
FDNS	06ALL	3	25SP	G14_065	TO->FROM	PNDEROSATP 3115.00 - WHITTEN SUB 115KV CKT 1	141	141	0.38208	100.6142	SPP-SWPS-T14
FDNS	06ALL	3	25SP	G14_065	TO->FROM	PNDEROSATP 3115.00 - WHITTEN SUB 115KV CKT 1	141	141	0.38201	100.5721	GEN562637 1-ASGI14_010_213.000
FDNS	06ALL	3	20SP	G14_065	TO->FROM	PNDEROSATP 3115.00 - WHITTEN SUB 115KV CKT 1	141	141	0.3949	99.7	LAGARTO 3115.00 - National Enrichment Plant Tap 115KV CKT 1
FDNS	06ALL	3	15G	G14_065	FROM->TO	TUCO INTERCHANGE - TUCO_2 230.00 230KV CKT 1	478	502	0.27482	168.7325	TUCO INTERCHANGE - TUCO_2 345.00 345KV CKT 1
FDNS	06ALL	3	15SP	G14_065	FROM->TO	TUCO INTERCHANGE - TUCO_2 230.00 230KV CKT 1	478	502	0.28114	154.1201	TUCO INTERCHANGE - TUCO_2 345.00 345KV CKT 1
FDNS	06ALL	3	15WP	G14_065	FROM->TO	TUCO INTERCHANGE - TUCO_2 230.00 230KV CKT 1	557	557	0.28617	120.7037	TUCO INTERCHANGE - TUCO_2 345.00 345KV CKT 1
FDNS	06ALL	3	20SP	G14_065	FROM->TO	TUCO INTERCHANGE - TUCO_2 230.00 230KV CKT 1	478	502	0.29188	118.0325	TUCO INTERCHANGE - TUCO_2 345.00 345KV CKT 1
FDNS	06ALL	3	20WP	G14_065	FROM->TO	TUCO INTERCHANGE - TUCO_2 230.00 230KV CKT 1	557	557	0.2898	111.9352	TUCO INTERCHANGE - TUCO_2 345.00 345KV CKT 1
FDNS	06ALL	3	15G	G14_065	FROM->TO	TUCO_2 345.00 (TUCO_2 XFMR) 345/230/13.2KV TRANSFORMER CKT 1	560	560	0.25681	151.8506	TUCO INTERCHANGE - TUCO_2 345.00 345KV CKT 1
FDNS	06ALL	3	15G	G14_065	FROM->TO	TUCO_2 345.00 (TUCO_2 XFMR) 345/230/13.2KV TRANSFORMER CKT 1	560	560	0.25681	149.0893	TUCO INTERCHANGE - TUCO_2 345.00 345KV CKT 1
FDNS	06ALL	3	15SP	G14_065	FROM->TO	TUCO_2 345.00 (TUCO_2 XFMR) 345/230/13.2KV TRANSFORMER CKT 1	560	560	0.26319	133.4173	TUCO INTERCHANGE - TUCO_2 345.00 345KV CKT 1
FDNS	06ALL	3	15SP	G14_065	FROM->TO	TUCO_2 345.00 (TUCO_2 XFMR) 345/230/13.2KV TRANSFORMER CKT 1	560	560	0.26319	131.8248	TUCO INTERCHANGE - TUCO_2 345.00 345KV CKT 1
FDNS	06ALL	3	15WP	G14_065	FROM->TO	TUCO_2 345.00 (TUCO_2 XFMR) 345/230/13.2KV TRANSFORMER CKT 1	560	560	0.26886	127.9846	TUCO INTERCHANGE - TUCO_2 345.00 345KV CKT 1
FDNS	06ALL	3	15WP	G14_065	FROM->TO	TUCO_2 345.00 (TUCO_2 XFMR) 345/230/13.2KV TRANSFORMER CKT 1	560	560	0.26886	126.6738	TUCO INTERCHANGE - TUCO_2 345.00 345KV CKT 1
FDNS	06ALL	3	20WP	G14_065	FROM->TO	TUCO_2 345.00 (TUCO_2 XFMR) 345/230/13.2KV TRANSFORMER CKT 1	560	560	0.26371	121.9391	TUCO INTERCHANGE - TUCO_2 345.00 345KV CKT 1
FDNS	06ALL	3	20WP	G14_065	FROM->TO	TUCO_2 345.00 (TUCO_2 XFMR) 345/230/13.2KV TRANSFORMER CKT 1	560	560	0.26371	121.0095	TUCO INTERCHANGE - TUCO_2 345.00 345KV CKT 1
FDNS	06ALL	3	20SP	G14_065	FROM->TO	TUCO_2 345.00 (TUCO_2 XFMR) 345/230/13.2KV TRANSFORMER CKT 1	560	560	0.26644	100.2304	TUCO INTERCHANGE - TUCO_2 345.00 345KV CKT 1
FDNS	06ALL	3	20SP	G14_065	FROM->TO	TUCO_2 345.00 (TUCO_2 XFMR) 345/230/13.2KV TRANSFORMER CKT 1	560	560	0.26644	100.1212	TUCO INTERCHANGE - TUCO_2 345.00 345KV CKT 1
FDNS	06ALL	4	15SP	G14_065	FROM->TO	CHISHOLM6 230.00 - ELK CITY 230KV 230KV CKT 1	353	353	0.0663	100.9254	BASE CASE
FDNS	06ALL	4	15SP	G14_065	FROM->TO	ELK CITY 230KV (ELKCTY-6) 230/138/13.8KV TRANSFORMER CKT 1	272	316	0.0663	129.8441	BASE CASE
FDNS	06ALL	4	15SP	G14_065	FROM->TO	ELK CITY 230KV (ELKCTY-6) 230/138/13.8KV TRANSFORMER CKT 1	272	316	0.0663	128.5805	BASE CASE
FDNS	06ALL	4	15G	G14_065	FROM->TO	ELK CITY 230KV (ELKCTY-6) 230/138/13.8KV TRANSFORMER CKT 1	287	316	0.06203	116.3182	BASE CASE
FDNS	06ALL	4	15G	G14_065	FROM->TO	ELK CITY 230KV (ELKCTY-6) 230/138/13.8KV TRANSFORMER CKT 1	287	316	0.06203	115.4161	BASE CASE
FDNS	06ALL	4	15WP	G14_065	FROM->TO	ELK CITY 230KV (ELKCTY-6) 230/138/13.8KV TRANSFORMER CKT 1	287	316	0.06823	112.0283	BASE CASE
FDNS	06ALL	4	15WP	G14_065	FROM->TO	ELK CITY 230KV (ELKCTY-6) 230/138/13.8KV TRANSFORMER CKT 1	287	316	0.06823	111.0401	BASE CASE
FDNS	06ALL	4	20SP	G14_065	FROM->TO	ELK CITY 230KV (ELKCTY-6) 230/138/13.8KV TRANSFORMER CKT 1	272	316	0.06627	107.1637	BASE CASE
FDNS	06ALL	4	20SP	G14_065	FROM->TO	ELK CITY 230KV (ELKCTY-6) 230/138/13.8KV TRANSFORMER CKT 1	272	316	0.06627	106.9127	BASE CASE
FDNS	06ALL	4	20WP	G14_065	FROM->TO	ELK CITY 230KV (ELKCTY-6) 230/138/13.8KV TRANSFORMER CKT 1	287	316	0.06556	106.7868	BASE CASE
FDNS	06ALL	4	20WP	G14_065	FROM->TO	ELK CITY 230KV (ELKCTY-6) 230/138/13.8KV TRANSFORMER CKT 1	287	316	0.06556	106.1189	BASE CASE
FDNS	06ALL	4	25SP	G14_065	TO->FROM	OCHOA SUB - PNDEROSATP 3115.00 115KV CKT 1	141	141	0.34087	138.9605	HOBBS - KIOWA 7345.00 345KV CKT 1
FDNS	06ALL	4	25SP	G14_065	TO->FROM	OCHOA SUB - PNDEROSATP 3115.00 115KV CKT 1	141	141	0.30202	123.3302	KIOWA 7345.00 - RDRUNNER 7345.00 345KV CKT 1
FDNS	06ALL	4	25SP	G14_065	TO->FROM	OCHOA SUB - PNDEROSATP 3115.00 115KV CKT 1	141	141	0.30202	122.9451	RDRUNNER 7345.00 (UPDATE LATER) 345/115/13.2KV TRANSFORMER CKT 1
FDNS	06ALL	4	20SP	G14_065	TO->FROM	OCHOA SUB - PNDEROSATP 3115.00 115KV CKT 1	141	141	0.34082	116.958	HOBBS - KIOWA 7345.00 345KV CKT 1
FDNS	06ALL	4	20SP	G14_065	TO->FROM	OCHOA SUB - PNDEROSATP 3115.00 115KV CKT 1	141	141	0.30199	109.4135	KIOWA 7345.00 - RDRUNNER 7345.00 345KV CKT 1
FDNS	06ALL	4	20SP	G14_065	TO->FROM	OCHOA SUB - PNDEROSATP 3115.00 115KV CKT 1	141	141	0.30199	109.1067	RDRUNNER 7345.00 (UPDATE LATER) 345/115/13.2KV TRANSFORMER CKT 1
FDNS	06ALL	4	25SP	G14_065	TO->FROM	PNDEROSATP 3115.00 - WHITTEN SUB 115KV CKT 1	141	141	0.34087	160.4218	HOBBS - KIOWA 7345.00 345KV CKT 1
FDNS	06ALL	4	25SP	G14_065	TO->FROM	PNDEROSATP 3115.00 - WHITTEN SUB 115KV CKT 1	141	141	0.30202	144.8569	KIOWA 7345.00 - RDRUNNER 7345.00 345KV CKT 1
FDNS	06ALL	4	25SP	G14_065	TO->FROM	PNDEROSATP 3115.00 - WHITTEN SUB 115KV CKT 1	141	141	0.30202	144.4781	RDRUNNER 7345.00 (UPDATE LATER) 345/115/13.2KV TRANSFORMER CKT 1

SOLUTION	GROUP	SCENARIO	SEASON	SOURCE	DIRECTION	MONITORED ELEMENT	RATEA (MVA)	RATEB(MVA)	TDF	TC%LOADING (% MVA)	CONTINGENCY
FDNS	06ALL	4	20SP	G14_065	TO->FROM	PNDEROSATP 3115.00 - WHITTEN SUB 115KV CKT 1	141	141	0.34082	133.1595	HOBBS - KIOWA 7345.00 345KV CKT 1
FDNS	06ALL	4	20SP	G14_065	TO->FROM	PNDEROSATP 3115.00 - WHITTEN SUB 115KV CKT 1	141	141	0.30199	125.6515	KIOWA 7345.00 - RDRUNNER 7345.00 345KV CKT 1
FDNS	06ALL	4	20SP	G14_065	TO->FROM	PNDEROSATP 3115.00 - WHITTEN SUB 115KV CKT 1	141	141	0.30199	125.3479	RDRUNNER 7345.00 (UPDATE LATER) 345/115/13.2KV TRANSFORMER CKT 1
FDNS	06ALL	4	25SP	G14_065	TO->FROM	PNDEROSATP 3115.00 - WHITTEN SUB 115KV CKT 1	141	141	0.38974	116.508	HOBBS (UPDATE DATA) 345/230/13.2KV TRANSFORMER CKT 1
FDNS	06ALL	4	25SP	G14_065	TO->FROM	PNDEROSATP 3115.00 - WHITTEN SUB 115KV CKT 1	141	141	0.39495	115.0945	LAGARTO 3115.00 - National Enrichment Plant Tap 115KV CKT 1
FDNS	06ALL	4	20WP	G14_065	TO->FROM	PNDEROSATP 3115.00 - WHITTEN SUB 115KV CKT 1	156	156	0.34084	109.1965	HOBBS - KIOWA 7345.00 345KV CKT 1
FDNS	06ALL	4	25SP	G14_065	TO->FROM	PNDEROSATP 3115.00 - WHITTEN SUB 115KV CKT 1	141	141	0.39495	107.8957	LAGARTO 3115.00 - SAGE_BRUSH 3115.00 115KV CKT 1
FDNS	06ALL	4	20WP	G14_065	TO->FROM	PNDEROSATP 3115.00 - WHITTEN SUB 115KV CKT 1	156	156	0.30198	106.5495	KIOWA 7345.00 - RDRUNNER 7345.00 345KV CKT 1
FDNS	06ALL	4	20WP	G14_065	TO->FROM	PNDEROSATP 3115.00 - WHITTEN SUB 115KV CKT 1	156	156	0.30198	106.3129	RDRUNNER 7345.00 (UPDATE LATER) 345/115/13.2KV TRANSFORMER CKT 1
FDNS	06ALL	4	25SP	G14_065	TO->FROM	PNDEROSATP 3115.00 - WHITTEN SUB 115KV CKT 1	141	141	0.3704	105.6911	LIVSTNRIDGE3115.00 - WIPP SUB 115KV CKT 1
FDNS	06ALL	4	25SP	G14_065	TO->FROM	PNDEROSATP 3115.00 - WHITTEN SUB 115KV CKT 1	141	141	0.37635	105.6244	INTREPDW_TP3115.00 - POTASH JUNCTION INTERCHANGE 115KV CKT 1
FDNS	06ALL	4	25SP	G14_065	TO->FROM	PNDEROSATP 3115.00 - WHITTEN SUB 115KV CKT 1	141	141	0.56527	105.2306	SPP-SWPS-T85
FDNS	06ALL	4	25SP	G14_065	TO->FROM	PNDEROSATP 3115.00 - WHITTEN SUB 115KV CKT 1	141	141	0.382	104.6369	DOLLARHIDE SUB - TOBOSOFLATS3115.00 115KV CKT 1
FDNS	06ALL	4	25SP	G14_065	TO->FROM	PNDEROSATP 3115.00 - WHITTEN SUB 115KV CKT 1	141	141	0.3704	104.3901	SAND DUNES SUB - WIPP SUB 115KV CKT 1
FDNS	06ALL	4	25SP	G14_065	TO->FROM	PNDEROSATP 3115.00 - WHITTEN SUB 115KV CKT 1	141	141	0.37635	104.2907	IMC_#1_TP 3115.00 - INTREPDW_TP3115.00 115KV CKT 1
FDNS	06ALL	4	25SP	G14_065	TO->FROM	PNDEROSATP 3115.00 - WHITTEN SUB 115KV CKT 1	141	141	0.38118	104.2725	KIOWA 7345.00 - NLOV_PLT 7345.00 345KV CKT 1
FDNS	06ALL	4	20SP	G14_065	TO->FROM	PNDEROSATP 3115.00 - WHITTEN SUB 115KV CKT 1	141	141	0.3897	103.9597	HOBBS (UPDATE DATA) 345/230/13.2KV TRANSFORMER CKT 1
FDNS	06ALL	4	25SP	G14_065	TO->FROM	PNDEROSATP 3115.00 - WHITTEN SUB 115KV CKT 1	141	141	0.38236	103.6908	CUNNINGHAM STATION - POTASH JUNCTION INTERCHANGE 230KV CKT 1
FDNS	06ALL	4	25SP	G14_065	TO->FROM	PNDEROSATP 3115.00 - WHITTEN SUB 115KV CKT 1	141	141	0.37541	103.2904	CHINA_DRAW 3115.00 - WOOD_DRAW 3115.00 115KV CKT 1
FDNS	06ALL	4	25SP	G14_065	TO->FROM	PNDEROSATP 3115.00 - WHITTEN SUB 115KV CKT 1	141	141	0.37635	103.2779	IMC_#1_TP 3115.00 - LIVSTNRIDGE3115.00 115KV CKT 1
FDNS	06ALL	4	25SP	G14_065	TO->FROM	PNDEROSATP 3115.00 - WHITTEN SUB 115KV CKT 1	141	141	0.38035	103.156	CHINA_DRAW 7345.00 - NLOV_PLT 7345.00 345KV CKT 1
FDNS	06ALL	4	25SP	G14_065	TO->FROM	PNDEROSATP 3115.00 - WHITTEN SUB 115KV CKT 1	141	141	0.3795	103.0832	POTASH JUNCTION INTERCHANGE (UPDATE LATER) 230/115/13.2KV TRANSFORMER CKT 1
FDNS	06ALL	4	25SP	G14_065	TO->FROM	PNDEROSATP 3115.00 - WHITTEN SUB 115KV CKT 1	141	141	0.38035	103	CHINA_DRAW 7345.00 (UPDATE LATER) 345/115/13.2KV TRANSFORMER CKT 1
FDNS	06ALL	4	25SP	G14_065	TO->FROM	PNDEROSATP 3115.00 - WHITTEN SUB 115KV CKT 1	141	141	0.36907	102.5134	HOBBS - YOAKUM_345 345.00 345KV CKT 1
FDNS	06ALL	4	25SP	G14_065	TO->FROM	PNDEROSATP 3115.00 - WHITTEN SUB 115KV CKT 1	141	141	0.38238	101.1413	CUNNINGHAM STATION - QUAHADA 3115.00 115KV CKT 1
FDNS	06ALL	4	25SP	G14_065	TO->FROM	PNDEROSATP 3115.00 - WHITTEN SUB 115KV CKT 1	141	141	0.38265	101.0921	PCA INTERCHANGE - QUAHADA 3115.00 115KV CKT 1
FDNS	06ALL	4	25SP	G14_065	TO->FROM	PNDEROSATP 3115.00 - WHITTEN SUB 115KV CKT 1	141	141	0.39495	100.7703	LIVSTNRIDGE3115.00 - SAGE_BRUSH 3115.00 115KV CKT 1
FDNS	06ALL	4	25SP	G14_065	TO->FROM	PNDEROSATP 3115.00 - WHITTEN SUB 115KV CKT 1	141	141	0.38205	100.7335	MADDOX STATION - PEARL SUB 115KV CKT 1
FDNS	06ALL	4	25SP	G14_065	TO->FROM	PNDEROSATP 3115.00 - WHITTEN SUB 115KV CKT 1	141	141	0.38208	100.6116	SPP-SWPS-T14
FDNS	06ALL	4	25SP	G14_065	TO->FROM	PNDEROSATP 3115.00 - WHITTEN SUB 115KV CKT 1	141	141	0.382	100.5706	GEN562637 1-ASGI14_010_213.000
FDNS	06ALL	4	20SP	G14_065	TO->FROM	PNDEROSATP 3115.00 - WHITTEN SUB 115KV CKT 1	141	141	0.39491	99.7	LAGARTO 3115.00 - National Enrichment Plant Tap 115KV CKT 1
FDNS	06ALL	4	15G	G14_065	FROM->TO	TUCO INTERCHANGE - TUCO_2 230.00 230KV CKT 1	478	502	0.25935	148.7289	TUCO INTERCHANGE - TUCO_2 345.00 345KV CKT 1
FDNS	06ALL	4	15SP	G14_065	FROM->TO	TUCO INTERCHANGE - TUCO_2 230.00 230KV CKT 1	478	502	0.26508	139.4418	TUCO INTERCHANGE - TUCO_2 345.00 345KV CKT 1
FDNS	06ALL	4	20SP	G14_065	FROM->TO	TUCO INTERCHANGE - TUCO_2 230.00 230KV CKT 1	478	502	0.27608	108.3093	TUCO INTERCHANGE - TUCO_2 345.00 345KV CKT 1
FDNS	06ALL	4	15WP	G14_065	FROM->TO	TUCO INTERCHANGE - TUCO_2 230.00 230KV CKT 1	557	557	0.26974	107.3541	TUCO INTERCHANGE - TUCO_2 345.00 345KV CKT 1
FDNS	06ALL	4	20WP	G14_065	FROM->TO	TUCO INTERCHANGE - TUCO_2 230.00 230KV CKT 1	557	557	0.27446	99.6	TUCO INTERCHANGE - TUCO_2 345.00 345KV CKT 1
FDNS	06ALL	4	15G	G14_065	FROM->TO	TUCO_2 345.00 (TUCO_2 XFMR) 345/230/13.2KV TRANSFORMER CKT 1	560	560	0.23033	127.7356	TUCO INTERCHANGE - TUCO_2 345.00 345KV CKT 1
FDNS	06ALL	4	15G	G14_065	FROM->TO	TUCO_2 345.00 (TUCO_2 XFMR) 345/230/13.2KV TRANSFORMER CKT 1	560	560	0.23033	126.397	TUCO INTERCHANGE - TUCO_2 345.00 345KV CKT 1
FDNS	06ALL	4	15SP	G14_065	FROM->TO	TUCO_2 345.00 (TUCO_2 XFMR) 345/230/13.2KV TRANSFORMER CKT 1	560	560	0.23594	114.1941	TUCO INTERCHANGE - TUCO_2 345.00 345KV CKT 1
FDNS	06ALL	4	15SP	G14_065	FROM->TO	TUCO_2 345.00 (TUCO_2 XFMR) 345/230/13.2KV TRANSFORMER CKT 1	560	560	0.23594	113.3239	TUCO INTERCHANGE - TUCO_2 345.00 345KV CKT 1
FDNS	06ALL	4	15WP	G14_065	FROM->TO	TUCO_2 345.00 (TUCO_2 XFMR) 345/230/13.2KV TRANSFORMER CKT 1	560	560	0.24095	108.1334	TUCO INTERCHANGE - TUCO_2 345.00 345KV CKT 1
FDNS	06ALL	4	15WP	G14_065	FROM->TO	TUCO_2 345.00 (TUCO_2 XFMR) 345/230/13.2KV TRANSFORMER CKT 1	560	560	0.24095	107.4733	TUCO INTERCHANGE - TUCO_2 345.00 345KV CKT 1
FDNS	06ALL	4	20WP	G14_065	FROM->TO	TUCO_2 345.00 (TUCO_2 XFMR) 345/230/13.2KV TRANSFORMER CKT 1	560	560	0.23793	102.8738	TUCO INTERCHANGE - TUCO_2 345.00 345KV CKT 1
FDNS	06ALL	4	20WP	G14_065	FROM->TO	TUCO_2 345.00 (TUCO_2 XFMR) 345/230/13.2KV TRANSFORMER CKT 1	560	560	0.23793	102.4022	TUCO INTERCHANGE - TUCO_2 345.00 345KV CKT 1
FDNS	06ALL	5	15SP	G14_065	FROM->TO	CHISHOLM6 230.00 - ELK CITY 230KV 230KV CKT 1	353	353	0.06648	100.9761	BASE CASE
FDNS	06ALL	5	15SP	G14_065	FROM->TO	ELK CITY 230KV (ELKCTY-6) 230/138/13.8KV TRANSFORMER CKT 1	272	316	0.06648	129.9064	BASE CASE
FDNS	06ALL	5	15SP	G14_065	FROM->TO	ELK CITY 230KV (ELKCTY-6) 230/138/13.8KV TRANSFORMER CKT 1	272	316	0.06648	128.6412	BASE CASE
FDNS	06ALL	5	15G	G14_065	FROM->TO	ELK CITY 230KV (ELKCTY-6) 230/138/13.8KV TRANSFORMER CKT 1	287	316	0.06221	116.3419	BASE CASE
FDNS	06ALL	5	15G	G14_065	FROM->TO	ELK CITY 230KV (ELKCTY-6) 230/138/13.8KV TRANSFORMER CKT 1	287	316	0.06221	115.4406	BASE CASE
FDNS	06ALL	5	15WP	G14_065	FROM->TO	ELK CITY 230KV (ELKCTY-6) 230/138/13.8KV TRANSFORMER CKT 1	287	316	0.06841	112.0665	BASE CASE
FDNS	06ALL	5	15WP	G14_065	FROM->TO	ELK CITY 230KV (ELKCTY-6) 230/138/13.8KV TRANSFORMER CKT 1	287	316	0.06841	111.0777	BASE CASE
FDNS	06ALL	5	20SP	G14_065	FROM->TO	ELK CITY 230KV (ELKCTY-6) 230/138/13.8KV TRANSFORMER CKT 1	272	316	0.06646	107.1735	BASE CASE
FDNS	06ALL	5	20SP	G14_065	FROM->TO	ELK CITY 230KV (ELKCTY-6) 230/138/13.8KV TRANSFORMER CKT 1	272	316	0.06646	106.9225	BASE CASE
FDNS	06ALL	5	20WP	G14_065	FROM->TO	ELK CITY 230KV (ELKCTY-6) 230/138/13.8KV TRANSFORMER CKT 1	287	316	0.06575	106.7889	BASE CASE
FDNS	06ALL	5	20WP	G14_065	FROM->TO	ELK CITY 230KV (ELKCTY-6) 230/138/13.8KV TRANSFORMER CKT 1	287	316	0.06575	106.1215	BASE CASE
FDNS	06ALL	5	25SP	G14_065	TO->FROM	OCHOA SUB - PNDEROSATP 3115.00 115KV CKT 1	141	141	0.34091	138.9443	HOBBS - KIOWA 7345.00 345KV CKT 1
FDNS	06ALL	5	25SP	G14_065	TO->FROM	OCHOA SUB - PNDEROSATP 3115.00 115KV CKT 1	141	141	0.302	123.3344	KIOWA 7345.00 - RDRUNNER 7345.00 345KV CKT 1
FDNS	06ALL	5	25SP	G14_065	TO->FROM	OCHOA SUB - PNDEROSATP 3115.00 115KV CKT 1	141	141	0.302	122.9492	RDRUNNER 7345.00 (UPDATE LATER) 345/115/13.2KV TRANSFORMER CKT 1
FDNS	06ALL	5	20SP	G14_065	TO->FROM	OCHOA SUB - PNDEROSATP 3115.00 115KV CKT 1	141	141	0.34086	116.9458	HOBBS - KIOWA 7345.00 345KV CKT 1
FDNS	06ALL	5	20SP	G14_065	TO->FROM	OCHOA SUB - PNDEROSATP 3115.00 115KV CKT 1	141	141	0.30198	109.4172	KIOWA 7345.00 - RDRUNNER 7345.00 345KV CKT 1
FDNS	06ALL	5	20SP	G14_065	TO->FROM	OCHOA SUB - PNDEROSATP 3115.00 115KV CKT 1	141	141	0.30198	109.1103	RDRUNNER 7345.00 (UPDATE LATER) 345/115/13.2KV TRANSFORMER CKT 1
FDNS	06ALL	5	25SP	G14_065	TO->FROM	PNDEROSATP 3115.00 - WHITTEN SUB 115KV CKT 1	141	141	0.34091	160.4056	HOBBS - KIOWA 7345.00 345KV CKT 1
FDNS	06ALL	5	25SP	G14_065	TO->FROM	PNDEROSATP 3115.00 - WHITTEN SUB 115KV CKT 1	141	141	0.302	144.8611	KIOWA 7345.00 - RDRUNNER 7345.00 345KV CKT 1
FDNS	06ALL	5	25SP	G14_065	TO->FROM	PNDEROSATP 3115.00 - WHITTEN SUB 115KV CKT 1	141	141	0.302	144.4821	RDRUNNER 7345.00 (UPDATE LATER) 345/115/13.2KV TRANSFORMER CKT 1
FDNS	06ALL	5	20SP	G14_065	TO->FROM	PNDEROSATP 3115.00 - WHITTEN SUB 115KV CKT 1	141	141	0.34086	133.1474	HOBBS - KIOWA 7345.00 345KV CKT 1
FDNS	06ALL	5	20SP	G14_065	TO->FROM	PNDEROSATP 3115.00 - WHITTEN SUB 115KV CKT 1	141	141	0.30198	125.6552	KIOWA 7345.00 - RDRUNNER 7345.00 345KV CKT 1
FDNS	06ALL	5	20SP	G14_065	TO->FROM	PNDEROSATP 3115.00 - WHITTEN SUB 115KV CKT 1	141	141	0.30198	125.3515	RDRUNNER 7345.00 (UPDATE LATER) 345/115/13.2KV TRANSFORMER CKT 1
FDNS	06ALL	5	25SP	G14_065	TO->FROM	PNDEROSATP 3115.00 - WHITTEN SUB 115KV CKT 1	141	141	0.38966	116.5627	HOBBS (UPDATE DATA) 345/230/13.2KV TRANSFORMER CKT 1
FDNS	06ALL	5	25SP	G14_065	TO->FROM	PNDEROSATP 3115.00 - WHITTEN SUB 115KV CKT 1	141	141	0.39492	115.1063	LAGARTO 3115.00 - National Enrichment Plant Tap 115KV CKT 1
FDNS	06ALL	5	20WP	G14_065	TO->FROM	PNDEROSATP 3115.00 - WHITTEN SUB 115KV CKT 1	156	156	0.34088	109.1811	HOBBS - KIOWA 7345.00 345KV CKT 1
FDNS	06ALL	5	25SP	G14_065	TO->FROM	PNDEROSATP 3115.00 - WHITTEN SUB 115KV CKT 1	141	141	0.39492	107.9062	LAGARTO 3115.00 - SAGE_BRUSH 3115.00 115KV CKT 1
FDNS	06ALL	5	20WP	G14_065	TO->FROM	PNDEROSATP 3115.00 - WHITTEN SUB 115KV CKT 1	156	156	0.30197	106.5527	KIOWA 7345.00 - RDRUNNER 7345.00 345KV CKT 1
FDNS	06ALL	5	20WP	G14_065	TO->FROM	PNDEROSATP 3115.00 - WHITTEN SUB 115KV CKT 1	156	156	0.30197	106.316	RDRUNNER 7345.00 (UPDATE LATER) 345/115/13.2KV TRANSFORMER CKT 1
FDNS	06ALL	5	25SP	G14_065	TO->FROM	PNDEROSATP 3115.00 - WHITTEN SUB 115KV CKT 1	141	141	0.37037	105.7033	LIVSTNRIDGE3115.00 - WIPP SUB 115KV CKT 1
FDNS	06ALL	5	25SP	G14_065	TO->FROM	PNDEROSATP 3115.00 - WHITTEN SUB 115KV CKT 1	141	141	0.37633	105.6348	INTREPDW_TP3115.00 - POTASH JUNCTION INTERCHANGE 115KV CKT 1

SOLUTION	GROUP	SCENARIO	SEASON	SOURCE	DIRECTION	MONITORED ELEMENT	RATEA (MVA)	RATEB(MVA)	TDF	TC%LOADING (% MVA)	CONTINGENCY
FDNS	06ALL	5	25SP	G14_065	TO->FROM	PNDEROSATP 3115.00 - WHITTEN SUB 115KV CKT 1	141	141	0.56524	105.2392	SPP-SWPS-T85
FDNS	06ALL	5	25SP	G14_065	TO->FROM	PNDEROSATP 3115.00 - WHITTEN SUB 115KV CKT 1	141	141	0.38198	104.6464	DOLLARHIDE SUB - TOBOSOFLATS3115.00 115KV CKT 1
FDNS	06ALL	5	25SP	G14_065	TO->FROM	PNDEROSATP 3115.00 - WHITTEN SUB 115KV CKT 1	141	141	0.37037	104.4023	SAND DUNES SUB - WIPP SUB 115KV CKT 1
FDNS	06ALL	5	25SP	G14_065	TO->FROM	PNDEROSATP 3115.00 - WHITTEN SUB 115KV CKT 1	141	141	0.37633	104.3012	IMC_#1_TP 3115.00 - INTREPDW_TP3115.00 115KV CKT 1
FDNS	06ALL	5	25SP	G14_065	TO->FROM	PNDEROSATP 3115.00 - WHITTEN SUB 115KV CKT 1	141	141	0.38116	104.281	KIOWA 7345.00 - NLOV_PLT 7345.00 345KV CKT 1
FDNS	06ALL	5	20SP	G14_065	TO->FROM	PNDEROSATP 3115.00 - WHITTEN SUB 115KV CKT 1	141	141	0.38961	103.9994	HOBBS (UPDATE DATA) 345/230/13.2KV TRANSFORMER CKT 1
FDNS	06ALL	5	25SP	G14_065	TO->FROM	PNDEROSATP 3115.00 - WHITTEN SUB 115KV CKT 1	141	141	0.38234	103.6972	CUNNINGHAM STATION - POTASH JUNCTION INTERCHANGE 230KV CKT 1
FDNS	06ALL	5	25SP	G14_065	TO->FROM	PNDEROSATP 3115.00 - WHITTEN SUB 115KV CKT 1	141	141	0.37539	103.3002	CHINA_DRAW 3115.00 - WOOD_DRAW 3115.00 115KV CKT 1
FDNS	06ALL	5	25SP	G14_065	TO->FROM	PNDEROSATP 3115.00 - WHITTEN SUB 115KV CKT 1	141	141	0.37633	103.2883	IMC_#1_TP 3115.00 - LIVSTNRIDGE3115.00 115KV CKT 1
FDNS	06ALL	5	25SP	G14_065	TO->FROM	PNDEROSATP 3115.00 - WHITTEN SUB 115KV CKT 1	141	141	0.38033	103.1651	CHINA_DRAW 7345.00 - NLOV_PLT 7345.00 345KV CKT 1
FDNS	06ALL	5	25SP	G14_065	TO->FROM	PNDEROSATP 3115.00 - WHITTEN SUB 115KV CKT 1	141	141	0.37947	103.097	POTASH JUNCTION INTERCHANGE (UPDATE LATER) 230/115/13.2KV TRANSFORMER CKT 1
FDNS	06ALL	5	25SP	G14_065	TO->FROM	PNDEROSATP 3115.00 - WHITTEN SUB 115KV CKT 1	141	141	0.38033	103.0091	CHINA_DRAW 7345.00 (UPDATE LATER) 345/115/13.2KV TRANSFORMER CKT 1
FDNS	06ALL	5	25SP	G14_065	TO->FROM	PNDEROSATP 3115.00 - WHITTEN SUB 115KV CKT 1	141	141	0.36908	102.5069	HOBBS - YOAKUM_345 345.00 345KV CKT 1
FDNS	06ALL	5	25SP	G14_065	TO->FROM	PNDEROSATP 3115.00 - WHITTEN SUB 115KV CKT 1	141	141	0.38236	101.1513	CUNNINGHAM STATION - QUAHADA 3115.00 115KV CKT 1
FDNS	06ALL	5	25SP	G14_065	TO->FROM	PNDEROSATP 3115.00 - WHITTEN SUB 115KV CKT 1	141	141	0.38263	101.102	PCA INTERCHANGE - QUAHADA 3115.00 115KV CKT 1
FDNS	06ALL	5	25SP	G14_065	TO->FROM	PNDEROSATP 3115.00 - WHITTEN SUB 115KV CKT 1	141	141	0.39492	100.7807	LIVSTNRIDGE3115.00 - SAGE_BRUSH 3115.00 115KV CKT 1
FDNS	06ALL	5	25SP	G14_065	TO->FROM	PNDEROSATP 3115.00 - WHITTEN SUB 115KV CKT 1	141	141	0.38202	100.7443	MADDOX STATION - PEARL SUB 115KV CKT 1
FDNS	06ALL	5	25SP	G14_065	TO->FROM	PNDEROSATP 3115.00 - WHITTEN SUB 115KV CKT 1	141	141	0.38205	100.6202	SPP-SWPS-T14
FDNS	06ALL	5	25SP	G14_065	TO->FROM	PNDEROSATP 3115.00 - WHITTEN SUB 115KV CKT 1	141	141	0.38198	100.5806	GEN562637 1-ASGI14_010_213.000
FDNS	06ALL	5	20SP	G14_065	TO->FROM	PNDEROSATP 3115.00 - WHITTEN SUB 115KV CKT 1	141	141	0.39488	99.7	LAGARTO 3115.00 - National Enrichment Plant Tap 115KV CKT 1
FDNS	00NR	0	15WP	G14_068	FROM->TO	BUSHLAND INTERCHANGE (WH 7001795) 230/115/13.2KV TRANSFORMER CKT 1	168	168	0.17683	103.7121	BUSHLAND INTERCHANGE - POTTER COUNTY INTERCHANGE 230KV CKT 1
FDNS	00NR	0	15WP	G14_068	FROM->TO	BUSHLAND INTERCHANGE (WH 7001795) 230/115/13.2KV TRANSFORMER CKT 1	168	168	0.17683	101.6436	BUSHLAND INTERCHANGE - POTTER COUNTY INTERCHANGE 230KV CKT 1
FDNS	00NR	0	25SP	G14_068	TO->FROM	CARLISLE INTERCHANGE - TUCO INTERCHANGE 230KV CKT 1	319	351	0.05617	104.6408	JONES STATION - TUCO INTERCHANGE 230KV CKT 1
FDNS	00NR	0	15WP	G14_068	FROM->TO	DEAF SMITH COUNTY INTERCHANGE - Panda Energy Substation Hereford 115KV CKT 1	106	106	0.1271	102.4385	BUSHLAND INTERCHANGE - DEAF SMITH COUNTY INTERCHANGE 230KV CKT 1
FDNSLock-Blown up	06ALL	0	15G	G14_074		Non-Converged Contingency	1420	1775	0.41692	-	TUCO INTERCHANGE - TUCO_2 345.00 345KV CKT 1
FDNSLock-Blown up	06ALL	0	15G	G14_074		Non-Converged Contingency	956	994	0.3621	-	G14-074T 345.00 - OKLAUNION 345KV CKT 1
FDNSLock-Blown up	06ALL	0	15G	G14_074		Non-Converged Contingency	956	994	0.3621	-	OKLAUNION 345KV SWITCHED SHUNT
FDNSLock-Blown up	06ALL	0	15G	G14_074		Non-Converged Contingency	1195	1195	0.21413	-	GRACEMONT - MINCO 345KV CKT 1
FDNSLock-Blown up	06NR	0	15G	G14_074		Non-Converged Contingency	956	994	0.19747	-	G14-074T 345.00 - OKLAUNION 345KV CKT 1
FDNSLock-Blown up	06ALL	0	15G	G14_074		Non-Converged Contingency	1792	1792	0.17954	-	CHISHOLM7 345.00 - WOODWARD DISTRICT EHV 345KV CKT 1
FDNSLock-Blown up	06ALL	0	15G	G14_074		Non-Converged Contingency	0	0	0.16532	-	SPSCONT-02X
FDNSLock-Blown up	06ALL	0	15G	G14_074		Non-Converged Contingency	1792	1792	0.15895	-	BORDER 7345.00 - CHISHOLM7 345.00 345KV CKT 1
FDNSLock-Blown up	06ALL	0	15G	G14_074		Non-Converged Contingency	1792	1792	0.15895	-	BORDER 7345.00 - CHISHOLM7 345.00 345KV CKT 2
FDNSLock-Blown up	06ALL	0	15G	G14_074		Non-Converged Contingency	1420	1775	0.15895	-	BORDER 7345.00 - TUCO_2 345.00 345KV CKT 1
FDNSLock-Blown up	06ALL	0	15G	G14_074		Non-Converged Contingency	1420	1775	0.15895	-	BORDER 7345.00 - TUCO_2 345.00 345KV CKT 2
FDNSLock-Blown up	06ALL	0	15G	G14_074		Non-Converged Contingency	0	0	0.12621	-	SPSCONT-05AX
FDNSLock-Blown up	06ALL	0	15G	G14_074		Non-Converged Contingency	1330	1940	0.10658	-	CHISHOLM7 345.00 - GRACEMONT 345KV CKT 1
FDNSLock-Blown up	06ALL	0	15G	G14_074		Non-Converged Contingency	956	1052	0.08659	-	FINNEY SWITCHING STATION - Hitchland Interchange 345KV CKT 1
FDNSLock-Blown up	06ALL	0	15G	G14_074		Non-Converged Contingency	956	1052	0.08659	-	FINNEY SWITCHING STATION - HOLCOMB 345KV CKT 1
FDNSLock-Blown up	06ALL	0	15G	G14_074		Non-Converged Contingency	0	0	0.08659	-	SPP-SWPS-05
FDNSLock-Blown up	06ALL	0	15G	G14_074		Non-Converged Contingency	956	1052	0.08266	-	G14_038T 345.00 - Hitchland Interchange 345KV CKT 1
FDNSLock-Blown up	06ALL	0	15G	G14_074		Non-Converged Contingency	956	1052	0.08266	-	G14_038T 345.00 - POTTER COUNTY INTERCHANGE 345KV CKT 1
FDNSLock-Blown up	06ALL	0	15G	G14_074		Non-Converged Contingency	560	560	0.08266	-	POTTER COUNTY INTERCHANGE (WAUK 90343-A) 345/230/13.2KV TRANSFORMER CKT 1
FDNSLock-Blown up	06ALL	0	15G	G14_074		Non-Converged Contingency	319	351	0.0718	-	AMARILLO SOUTH INTERCHANGE - SWISHER COUNTY INTERCHANGE 230KV CKT 1
FDNSLock-Blown up	06ALL	0	15G	G14_074		Non-Converged Contingency	478	502	0.06313	-	NEWHART 230 - POTTER COUNTY INTERCHANGE 230KV CKT 1
FDNSLock-Blown up	06ALL	0	15G	G14_074		Non-Converged Contingency	1420	1775	0.06311	-	G11_051T 345.00 - TATONGA7 345.00 345KV CKT 1
FDNSLock-Blown up	06ALL	0	15G	G14_074		Non-Converged Contingency	1420	1775	0.06311	-	G11_051T 345.00 - WOODWARD DISTRICT EHV 345KV CKT 1
FDNSLock-Blown up	06ALL	0	15G	G14_074		Non-Converged Contingency	1195	1195	0.06311	-	NORTHWEST - TATONGA7 345.00 345KV CKT 1
FDNSLock-Blown up	06ALL	0	15G	G14_074		Non-Converged Contingency	0	0	0.06311	-	SPSCONT-04
FDNSLock-Blown up	06ALL	0	15G	G14_074		Non-Converged Contingency	0	0	0.06311	-	SPSCONT-05B
FDNSLock-Blown up	06ALL	0	15G	G14_074		Non-Converged Contingency	319	351	0.05319	-	BUSHLAND INTERCHANGE - DEAF SMITH COUNTY INTERCHANGE 230KV CKT 1
FDNSLock-Blown up	06ALL	0	15G	G14_074		Non-Converged Contingency	319	351	0.05319	-	BUSHLAND INTERCHANGE 230KV SWITCHED SHUNT
FDNSLock-Blown up	06ALL	0	15G	G14_074		Non-Converged Contingency	319	351	0.04899	-	BUSHLAND INTERCHANGE - POTTER COUNTY INTERCHANGE 230KV CKT 1
FDNSLock-Blown up	06ALL	0	15G	G14_074		Non-Converged Contingency	439	439	0.04497	-	CHISHOLM6 230.00 - ELK CITY 230KV 230KV CKT 1
FDNSLock-Blown up	06ALL	0	15G	G14_074		Non-Converged Contingency	287	316	0.04497	-	ELK CITY 230KV (ELKCTY-6) 230/138/13.8KV TRANSFORMER CKT 1
FDNSLock-Blown up	06ALL	0	15G	G14_074		Non-Converged Contingency	478	478	0.04442	-	DEAF SMITH COUNTY INTERCHANGE - G14-068T 230.00 230KV CKT 1
FDNSLock-Blown up	06ALL	0	15G	G14_074		Non-Converged Contingency	478	478	0.04442	-	G14-068T 230.00 - PLANT X STATION 230KV CKT 1
FDNSLock-Blown up	06ALL	0	15G	G14_074		Non-Converged Contingency	478	502	0.03488	-	HITCHLAND INTERCHANGE - MOORE COUNTY INTERCHANGE 230KV CKT 1
FDNSLock-Blown up	06ALL	0	15G	G14_074		Non-Converged Contingency	478	502	0.03488	-	HITCHLAND INTERCHANGE - MOORE COUNTY INTERCHANGE 230KV CKT 1
FDNSLock-Blown up	06ALL	0	15G	G14_074		Non-Converged Contingency	1413	1517	0.03457	-	BUCKNER7 345.00 - SPEARVILLE 345KV CKT 1
FDNSLock-Blown up	06ALL	0	15G	G14_074		Non-Converged Contingency	1420	1775	0.03057	-	G11-14T 345.00 - WOODWARD DISTRICT EHV 345KV CKT 1
FDNSLock-Blown up	06ALL	0	15G	G14_074		Non-Converged Contingency	1420	1775	0.03057	-	G11-14T 345.00 - WOODWARD DISTRICT EHV 345KV CKT 2
FDNSLock-Blown up	06ALL	0	15G	G14_074		Non-Converged Contingency	319	351	0.03011	-	MOORE COUNTY INTERCHANGE - POTTER COUNTY INTERCHANGE 230KV CKT 1
FDNSLock-Blown up	06ALL	0	15G	G14_074		Non-Converged Contingency	319	351	0.03011	-	MOORE COUNTY INTERCHANGE - POTTER COUNTY INTERCHANGE 230KV CKT 1
FDNSLock-Blown up	06ALL	0	15SP	G14_074		Non-Converged Contingency	956	994	0.36856	-	G14-074T 345.00 - OKLAUNION 345KV CKT 1
FDNSLock-Blown up	06ALL	0	15SP	G14_074		Non-Converged Contingency	0	0	0.17988	-	SPSCONT-02X
FDNSLock-Blown up	06ALL	0	15SP	G14_074		Non-Converged Contingency	1420	1775	0.16352	-	BORDER 7345.00 - TUCO_2 345.00 345KV CKT 1
FDNSLock-Blown up	06ALL	0	15SP	G14_074		Non-Converged Contingency	1420	1775	0.16352	-	BORDER 7345.00 - TUCO_2 345.00 345KV CKT 2
FDNSLock-Blown up	06ALL	0	15SP	G14_074		Non-Converged Contingency	956	1052	0.08994	-	G14_038T 345.00 - Hitchland Interchange 345KV CKT 1
FDNSLock-Blown up	06ALL	0	15SP	G14_074		Non-Converged Contingency	478	478	0.0449	-	G14-068T 230.00 - PLANT X STATION 230KV CKT 1
FDNSLock-Blown up	06ALL	0	15WP	G14_074		Non-Converged Contingency	1033	1071	0.37366	-	G14-074T 345.00 - OKLAUNION 345KV CKT 1
FDNSLock-Blown up	06ALL	0	20SP	G14_074		Non-Converged Contingency	956	994	0.41845	-	G14-074T 345.00 - OKLAUNION 345KV CKT 1
FDNSLock-Blown up	06ALL	0	20WP	G14_074		Non-Converged Contingency	1033	1071	0.41544	-	G14-074T 345.00 - OKLAUNION 345KV CKT 1
FDNSLock-Blown up	06ALL	0	20WP	G14_074		Non-Converged Contingency	0	0	0.2083	-	SPSCONT-02X
FDNSLock-Blown up	06ALL	0	20WP	G14_074		Non-Converged Contingency	1420	1775	0.19991	-	BORDER 7345.00 - TUCO_2 345.00 345KV CKT 1

SOLUTION	GROUP	SCENARIO	SEASON	SOURCE	DIRECTION	MONITORED ELEMENT	RATEA (MVA)	RATEB(MVA)	TDF	TC%LOADING (% MVA)	CONTINGENCY
FDNSLock-Blown up	06ALL	0	20WP	G14_074		Non-Converged Contingency	1792	1792	0.19991	-	BORDER 7345.00 - WOODWARD DISTRICT EHV 345KV CKT 1
FDNSLock-Blown up	06ALL	0	20WP	G14_074		Non-Converged Contingency	956	1052	0.10415	-	G14_038T 345.00 - Hitchland Interchange 345KV CKT 1
FDNSLock-Blown up	06ALL	2	15G	G14_074		Non-Converged Contingency	956	994	0.35997	-	G14-074T 345.00 - OKLAUNION 345KV CKT 1
FDNSLock-Blown up	06ALL	2	15G	G14_074		Non-Converged Contingency	0	0	0.17591	-	SPSCONT-02X
FDNSLock-Blown up	06ALL	2	15G	G14_074		Non-Converged Contingency	1420	1775	0.15641	-	BORDER 7345.00 - TUCO_2 345.00 345KV CKT 1
FDNSLock-Blown up	06ALL	2	15G	G14_074		Non-Converged Contingency	1420	1775	0.15641	-	BORDER 7345.00 - TUCO_2 345.00 345KV CKT 2
FDNSLock-Blown up	06ALL	2	15G	G14_074		Non-Converged Contingency	956	1052	0.08796	-	G14_038T 345.00 - Hitchland Interchange 345KV CKT 1
FDNSLock-Blown up	06ALL	2	15G	G14_074		Non-Converged Contingency	956	1052	0.08796	-	G14_038T 345.00 - POTTER COUNTY INTERCHANGE 345KV CKT 1
FDNSLock-Blown up	06ALL	2	15G	G14_074		Non-Converged Contingency	560	560	0.08796	-	POTTER COUNTY INTERCHANGE (WAUK 90343-A) 345/230/13.2KV TRANSFORMER CKT 1
FDNSLock-Blown up	06ALL	2	15SP	G14_074		Non-Converged Contingency	956	994	0.36589	-	G14-074T 345.00 - OKLAUNION 345KV CKT 1
FDNSLock-Blown up	06ALL	2	15WP	G14_074		Non-Converged Contingency	1033	1071	0.371	-	G14-074T 345.00 - OKLAUNION 345KV CKT 1
FDNSLock-Blown up	06ALL	3	15G	G14_074		Non-Converged Contingency	956	994	0.35303	-	G14-074T 345.00 - OKLAUNION 345KV CKT 1
FDNSLock-Blown up	06ALL	3	15G	G14_074		Non-Converged Contingency	0	0	0.22042	-	SPSCONT-02X
FDNSLock-Blown up	06ALL	3	15G	G14_074		Non-Converged Contingency	956	1052	0.11021	-	G14_038T 345.00 - Hitchland Interchange 345KV CKT 1
FDNSLock-Blown up	06ALL	3	15G	G14_074		Non-Converged Contingency	956	1052	0.11021	-	G14_038T 345.00 - POTTER COUNTY INTERCHANGE 345KV CKT 1
FDNS	00NR	0	25SP	G14_074	TO->FROM	CARLISLE INTERCHANGE - TUCO INTERCHANGE 230KV CKT 1	319	351	0.14317	104.6408	JONES STATION - TUCO INTERCHANGE 230KV CKT 1
FDNS	06ALL	0	15SP	G14_074	FROM->TO	ELK CITY 230KV (ELKCTY-6) 230/138/13.8KV TRANSFORMER CKT 1	272	316	0.04927	125.7575	BASE CASE
FDNS	06ALL	0	15SP	G14_074	FROM->TO	ELK CITY 230KV (ELKCTY-6) 230/138/13.8KV TRANSFORMER CKT 1	272	316	0.04927	124.0328	BASE CASE
FDNS	06ALL	0	15G	G14_074	FROM->TO	ELK CITY 230KV (ELKCTY-6) 230/138/13.8KV TRANSFORMER CKT 1	287	316	0.04497	112.017	BASE CASE
FDNS	06ALL	0	15G	G14_074	FROM->TO	ELK CITY 230KV (ELKCTY-6) 230/138/13.8KV TRANSFORMER CKT 1	287	316	0.04497	110.2834	BASE CASE
FDNS	06ALL	0	15WP	G14_074	FROM->TO	ELK CITY 230KV (ELKCTY-6) 230/138/13.8KV TRANSFORMER CKT 1	287	316	0.05112	107.7723	BASE CASE
FDNS	06ALL	0	15WP	G14_074	FROM->TO	ELK CITY 230KV (ELKCTY-6) 230/138/13.8KV TRANSFORMER CKT 1	287	316	0.05112	106.4302	BASE CASE
FDNS	06ALL	0	15G	G14_074	FROM->TO	G14-057T 345.00 - SUNNYSIDE 345KV CKT 1	717	789	0.219	103.8051	CIMARRON - MINCO 345KV CKT 1
FDNS	06ALL	0	15WP	G14_074	FROM->TO	G14-057T 345.00 - SUNNYSIDE 345KV CKT 1	717	789	0.22542	101.0126	CIMARRON - MINCO 345KV CKT 1
FDNS	06ALL	0	20WP	G14_074	TO->FROM	GRAPEVINE INTERCHANGE - NICHOLS STATION 230KV CKT 1	329	361	0.04529	121.1428	BASE CASE
FDNS	06ALL	0	20SP	G14_074	TO->FROM	GRAPEVINE INTERCHANGE - NICHOLS STATION 230KV CKT 1	319	351	0.04716	99.5	BASE CASE
FDNS	06NR	0	15G	G14_074	TO->FROM	PLANT X STATION - TOLK STATION EAST 230KV CKT 2	478	502	0.03033	120.665	SPP-SWPS-06
FDNS	06ALL	0	15SP	G14_074	FROM->TO	TUCO INTERCHANGE - TUCO_2 230.00 230KV CKT 1	478	502	0.36782	171.3069	TUCO INTERCHANGE - TUCO_2 345.00 345KV CKT 1
FDNS	06NR	0	15G	G14_074	FROM->TO	TUCO INTERCHANGE - TUCO_2 230.00 230KV CKT 1	478	502	0.1784	141.1746	TUCO INTERCHANGE - TUCO_2 345.00 345KV CKT 1
FDNS	06ALL	0	15WP	G14_074	FROM->TO	TUCO INTERCHANGE - TUCO_2 230.00 230KV CKT 1	557	557	0.37437	134.3573	TUCO INTERCHANGE - TUCO_2 345.00 345KV CKT 1
FDNS	06ALL	0	20SP	G14_074	FROM->TO	TUCO INTERCHANGE - TUCO_2 230.00 230KV CKT 1	478	502	0.28899	101.2947	TUCO INTERCHANGE - TUCO_2 345.00 345KV CKT 1
FDNS	06ALL	0	15SP	G14_074	FROM->TO	TUCO_2 345.00 (TUCO_2 XFMR) 345/230/13.2KV TRANSFORMER CKT 1	560	560	0.25749	145.8188	TUCO INTERCHANGE - TUCO_2 345.00 345KV CKT 1
FDNS	06ALL	0	15SP	G14_074	FROM->TO	TUCO_2 345.00 (TUCO_2 XFMR) 345/230/13.2KV TRANSFORMER CKT 1	560	560	0.25749	142.7342	TUCO INTERCHANGE - TUCO_2 345.00 345KV CKT 1
FDNS	06ALL	0	15WP	G14_074	FROM->TO	TUCO_2 345.00 (TUCO_2 XFMR) 345/230/13.2KV TRANSFORMER CKT 1	560	560	0.26436	138.8622	TUCO INTERCHANGE - TUCO_2 345.00 345KV CKT 1
FDNS	06ALL	0	15WP	G14_074	FROM->TO	TUCO_2 345.00 (TUCO_2 XFMR) 345/230/13.2KV TRANSFORMER CKT 1	560	560	0.26436	136.3817	TUCO INTERCHANGE - TUCO_2 345.00 345KV CKT 1
FDNS	00NR	2	25SP	G14_074	TO->FROM	CARLISLE INTERCHANGE - TUCO INTERCHANGE 230KV CKT 1	319	351	0.14228	105.1859	JONES STATION - TUCO INTERCHANGE 230KV CKT 1
FDNS	06ALL	2	15SP	G14_074	FROM->TO	ELK CITY 230KV (ELKCTY-6) 230/138/13.8KV TRANSFORMER CKT 1	272	316	0.04928	125.7818	BASE CASE
FDNS	06ALL	2	15SP	G14_074	FROM->TO	ELK CITY 230KV (ELKCTY-6) 230/138/13.8KV TRANSFORMER CKT 1	272	316	0.04928	124.4125	BASE CASE
FDNS	06ALL	2	15G	G14_074	FROM->TO	ELK CITY 230KV (ELKCTY-6) 230/138/13.8KV TRANSFORMER CKT 1	287	316	0.04533	111.2694	BASE CASE
FDNS	06ALL	2	15G	G14_074	FROM->TO	ELK CITY 230KV (ELKCTY-6) 230/138/13.8KV TRANSFORMER CKT 1	287	316	0.04533	110.3238	BASE CASE
FDNS	06ALL	2	15WP	G14_074	FROM->TO	ELK CITY 230KV (ELKCTY-6) 230/138/13.8KV TRANSFORMER CKT 1	287	316	0.05107	107.6385	BASE CASE
FDNS	06ALL	2	15WP	G14_074	FROM->TO	ELK CITY 230KV (ELKCTY-6) 230/138/13.8KV TRANSFORMER CKT 1	287	316	0.05107	106.6339	BASE CASE
FDNS	06ALL	2	20SP	G14_074	FROM->TO	ELK CITY 230KV (ELKCTY-6) 230/138/13.8KV TRANSFORMER CKT 1	272	316	0.04961	103.949	BASE CASE
FDNS	06ALL	2	20SP	G14_074	FROM->TO	ELK CITY 230KV (ELKCTY-6) 230/138/13.8KV TRANSFORMER CKT 1	272	316	0.04961	103.7414	BASE CASE
FDNS	06ALL	2	20WP	G14_074	FROM->TO	ELK CITY 230KV (ELKCTY-6) 230/138/13.8KV TRANSFORMER CKT 1	287	316	0.04886	101.967	BASE CASE
FDNS	06ALL	2	20WP	G14_074	FROM->TO	ELK CITY 230KV (ELKCTY-6) 230/138/13.8KV TRANSFORMER CKT 1	287	316	0.04886	101.2457	BASE CASE
FDNS	06ALL	2	15G	G14_074	FROM->TO	G14-057T 345.00 - SUNNYSIDE 345KV CKT 1	717	789	0.21859	104.4613	CIMARRON - MINCO 345KV CKT 1
FDNS	06ALL	2	15WP	G14_074	FROM->TO	G14-057T 345.00 - SUNNYSIDE 345KV CKT 1	717	789	0.22413	101.5191	CIMARRON - MINCO 345KV CKT 1
FDNS	06ALL	2	15G	G14_074	FROM->TO	G14-057T 345.00 - SUNNYSIDE 345KV CKT 1	717	789	0.21859	100.4832	GRACEMONT - MINCO 345KV CKT 1
FDNS	06ALL	2	15G	G14_074	FROM->TO	TUCO INTERCHANGE - TUCO_2 230.00 230KV CKT 1	478	502	0.34393	200.4231	TUCO INTERCHANGE - TUCO_2 345.00 345KV CKT 1
FDNS	06ALL	2	15SP	G14_074	FROM->TO	TUCO INTERCHANGE - TUCO_2 230.00 230KV CKT 1	478	502	0.35125	183.8625	TUCO INTERCHANGE - TUCO_2 345.00 345KV CKT 1
FDNS	06NR	2	15G	G14_074	FROM->TO	TUCO INTERCHANGE - TUCO_2 230.00 230KV CKT 1	478	502	0.13164	155.2111	TUCO INTERCHANGE - TUCO_2 345.00 345KV CKT 1
FDNS	06ALL	2	15WP	G14_074	FROM->TO	TUCO INTERCHANGE - TUCO_2 230.00 230KV CKT 1	557	557	0.35825	142.2485	TUCO INTERCHANGE - TUCO_2 345.00 345KV CKT 1
FDNS	06ALL	2	20SP	G14_074	FROM->TO	TUCO INTERCHANGE - TUCO_2 230.00 230KV CKT 1	478	502	0.35052	137.8459	TUCO INTERCHANGE - TUCO_2 345.00 345KV CKT 1
FDNS	06ALL	2	15G	G14_074	FROM->TO	TUCO_2 345.00 (TUCO_2 XFMR) 345/230/13.2KV TRANSFORMER CKT 1	560	560	0.24744	167.6169	TUCO INTERCHANGE - TUCO_2 345.00 345KV CKT 1
FDNS	06ALL	2	15G	G14_074	FROM->TO	TUCO_2 345.00 (TUCO_2 XFMR) 345/230/13.2KV TRANSFORMER CKT 1	560	560	0.24744	164.2629	TUCO INTERCHANGE - TUCO_2 345.00 345KV CKT 1
FDNS	06ALL	2	15SP	G14_074	FROM->TO	TUCO_2 345.00 (TUCO_2 XFMR) 345/230/13.2KV TRANSFORMER CKT 1	560	560	0.25515	149.8147	TUCO INTERCHANGE - TUCO_2 345.00 345KV CKT 1
FDNS	06ALL	2	15SP	G14_074	FROM->TO	TUCO_2 345.00 (TUCO_2 XFMR) 345/230/13.2KV TRANSFORMER CKT 1	560	560	0.25515	147.216	TUCO INTERCHANGE - TUCO_2 345.00 345KV CKT 1
FDNS	06ALL	2	15WP	G14_074	FROM->TO	TUCO_2 345.00 (TUCO_2 XFMR) 345/230/13.2KV TRANSFORMER CKT 1	560	560	0.26182	141.8557	TUCO INTERCHANGE - TUCO_2 345.00 345KV CKT 1
FDNS	06ALL	2	15WP	G14_074	FROM->TO	TUCO_2 345.00 (TUCO_2 XFMR) 345/230/13.2KV TRANSFORMER CKT 1	560	560	0.26182	139.9334	TUCO INTERCHANGE - TUCO_2 345.00 345KV CKT 1
FDNS	06ALL	2	20SP	G14_074	FROM->TO	TUCO_2 345.00 (TUCO_2 XFMR) 345/230/13.2KV TRANSFORMER CKT 1	560	560	0.25479	112.3827	TUCO INTERCHANGE - TUCO_2 345.00 345KV CKT 1
FDNS	06ALL	2	20SP	G14_074	FROM->TO	TUCO_2 345.00 (TUCO_2 XFMR) 345/230/13.2KV TRANSFORMER CKT 1	560	560	0.25479	112.1069	TUCO INTERCHANGE - TUCO_2 345.00 345KV CKT 1
FDNS	00NR	3	25SP	G14_074	TO->FROM	CARLISLE INTERCHANGE - TUCO INTERCHANGE 230KV CKT 1	319	351	0.14068	102.9279	JONES STATION - TUCO INTERCHANGE 230KV CKT 1
FDNS	06ALL	3	15SP	G14_074	FROM->TO	ELK CITY 230KV (ELKCTY-6) 230/138/13.8KV TRANSFORMER CKT 1	272	316	0.04867	123.9727	BASE CASE
FDNS	06ALL	3	15SP	G14_074	FROM->TO	ELK CITY 230KV (ELKCTY-6) 230/138/13.8KV TRANSFORMER CKT 1	272	316	0.04867	122.7526	BASE CASE
FDNS	06ALL	3	15G	G14_074	FROM->TO	ELK CITY 230KV (ELKCTY-6) 230/138/13.8KV TRANSFORMER CKT 1	287	316	0.04476	109.3338	BASE CASE
FDNS	06ALL	3	15G	G14_074	FROM->TO	ELK CITY 230KV (ELKCTY-6) 230/138/13.8KV TRANSFORMER CKT 1	287	316	0.04476	108.4212	BASE CASE
FDNS	06ALL	3	15WP	G14_074	FROM->TO	ELK CITY 230KV (ELKCTY-6) 230/138/13.8KV TRANSFORMER CKT 1	287	316	0.05045	106.1239	BASE CASE
FDNS	06ALL	3	15WP	G14_074	FROM->TO	ELK CITY 230KV (ELKCTY-6) 230/138/13.8KV TRANSFORMER CKT 1	287	316	0.05045	105.1628	BASE CASE
FDNS	06ALL	3	20SP	G14_074	FROM->TO	ELK CITY 230KV (ELKCTY-6) 230/138/13.8KV TRANSFORMER CKT 1	272	316	0.04891	102.7547	BASE CASE
FDNS	06ALL	3	20SP	G14_074	FROM->TO	ELK CITY 230KV (ELKCTY-6) 230/138/13.8KV TRANSFORMER CKT 1	272	316	0.04891	102.5743	BASE CASE
FDNS	06ALL	3	20WP	G14_074	FROM->TO	ELK CITY 230KV (ELKCTY-6) 230/138/13.8KV TRANSFORMER CKT 1	287	316	0.04821	100.8598	BASE CASE
FDNS	06ALL	3	20WP	G14_074	FROM->TO	ELK CITY 230KV (ELKCTY-6) 230/138/13.8KV TRANSFORMER CKT 1	287	316	0.04821	100.2492	BASE CASE
FDNS	06ALL	3	15G	G14_074	FROM->TO	G14-057T 345.00 - SUNNYSIDE 345KV CKT 1	717	789	0.21502	102.0848	CIMARRON - MINCO 345KV CKT 1
FDNS	06ALL	3	15G	G14_074	FROM->TO	TUCO INTERCHANGE - TUCO_2 230.00 230KV CKT 1	478	502	0.32232	168.7325	TUCO INTERCHANGE - TUCO_2 345.00 345KV CKT 1

SOLUTION	GROUP	SCENARIO	SEASON	SOURCE	DIRECTION	MONITORED ELEMENT	RATEA (MVA)	RATEB(MVA)	TDF	TC%LOADING (% MVA)	CONTINGENCY
FDNS	06ALL	3	15SP	G14_074	FROM->TO	TUCO INTERCHANGE - TUCO_2 230.00 230KV CKT 1	478	502	0.32908	154.1201	TUCO INTERCHANGE - TUCO_2 345.00 345KV CKT 1
FDNS	06NR	3	15G	G14_074	FROM->TO	TUCO INTERCHANGE - TUCO_2 230.00 230KV CKT 1	478	502	0.13178	132.6749	TUCO INTERCHANGE - TUCO_2 345.00 345KV CKT 1
FDNS	06ALL	3	15WP	G14_074	FROM->TO	TUCO INTERCHANGE - TUCO_2 230.00 230KV CKT 1	557	557	0.3353	120.7037	TUCO INTERCHANGE - TUCO_2 345.00 345KV CKT 1
FDNS	06ALL	3	20SP	G14_074	FROM->TO	TUCO INTERCHANGE - TUCO_2 230.00 230KV CKT 1	478	502	0.32775	118.0325	TUCO INTERCHANGE - TUCO_2 345.00 345KV CKT 1
FDNS	06ALL	3	20WP	G14_074	FROM->TO	TUCO INTERCHANGE - TUCO_2 230.00 230KV CKT 1	557	557	0.32567	111.9352	TUCO INTERCHANGE - TUCO_2 345.00 345KV CKT 1
FDNS	06ALL	3	15G	G14_074	FROM->TO	TUCO_2 345.00 (TUCO_2 XFMR) 345/230/13.2KV TRANSFORMER CKT 1	560	560	0.23243	151.8506	TUCO INTERCHANGE - TUCO_2 345.00 345KV CKT 1
FDNS	06ALL	3	15G	G14_074	FROM->TO	TUCO_2 345.00 (TUCO_2 XFMR) 345/230/13.2KV TRANSFORMER CKT 1	560	560	0.23243	149.0893	TUCO INTERCHANGE - TUCO_2 345.00 345KV CKT 1
FDNS	06ALL	3	15SP	G14_074	FROM->TO	TUCO_2 345.00 (TUCO_2 XFMR) 345/230/13.2KV TRANSFORMER CKT 1	560	560	0.23951	133.4173	TUCO INTERCHANGE - TUCO_2 345.00 345KV CKT 1
FDNS	06ALL	3	15SP	G14_074	FROM->TO	TUCO_2 345.00 (TUCO_2 XFMR) 345/230/13.2KV TRANSFORMER CKT 1	560	560	0.23951	131.8248	TUCO INTERCHANGE - TUCO_2 345.00 345KV CKT 1
FDNS	06ALL	3	15WP	G14_074	FROM->TO	TUCO_2 345.00 (TUCO_2 XFMR) 345/230/13.2KV TRANSFORMER CKT 1	560	560	0.24568	127.9846	TUCO INTERCHANGE - TUCO_2 345.00 345KV CKT 1
FDNS	06ALL	3	15WP	G14_074	FROM->TO	TUCO_2 345.00 (TUCO_2 XFMR) 345/230/13.2KV TRANSFORMER CKT 1	560	560	0.24568	126.6738	TUCO INTERCHANGE - TUCO_2 345.00 345KV CKT 1
FDNS	06ALL	3	20WP	G14_074	FROM->TO	TUCO_2 345.00 (TUCO_2 XFMR) 345/230/13.2KV TRANSFORMER CKT 1	560	560	0.23602	121.9391	TUCO INTERCHANGE - TUCO_2 345.00 345KV CKT 1
FDNS	06ALL	3	20WP	G14_074	FROM->TO	TUCO_2 345.00 (TUCO_2 XFMR) 345/230/13.2KV TRANSFORMER CKT 1	560	560	0.23602	121.0095	TUCO INTERCHANGE - TUCO_2 345.00 345KV CKT 1
FDNS	06ALL	3	20SP	G14_074	FROM->TO	TUCO_2 345.00 (TUCO_2 XFMR) 345/230/13.2KV TRANSFORMER CKT 1	560	560	0.23876	100.2304	TUCO INTERCHANGE - TUCO_2 345.00 345KV CKT 1
FDNS	06ALL	3	20SP	G14_074	FROM->TO	TUCO_2 345.00 (TUCO_2 XFMR) 345/230/13.2KV TRANSFORMER CKT 1	560	560	0.23876	100.1212	TUCO INTERCHANGE - TUCO_2 345.00 345KV CKT 1
FDNS	00NR	4	25SP	G14_074	TO->FROM	CARLISLE INTERCHANGE - TUCO INTERCHANGE 230KV CKT 1	319	351	0.13717	103.1286	JONES STATION - TUCO INTERCHANGE 230KV CKT 1
FDNS	06ALL	4	15SP	G14_074	FROM->TO	CHISHOLM6 230.00 - ELK CITY 230KV 230KV CKT 1	353	353	0.04994	100.9254	BASE CASE
FDNS	06ALL	4	15SP	G14_074	FROM->TO	ELK CITY 230KV (ELKCTY-6) 230/138/13.8KV TRANSFORMER CKT 1	272	316	0.04994	129.8441	BASE CASE
FDNS	06ALL	4	15SP	G14_074	FROM->TO	ELK CITY 230KV (ELKCTY-6) 230/138/13.8KV TRANSFORMER CKT 1	272	316	0.04994	128.5805	BASE CASE
FDNS	06ALL	4	15G	G14_074	FROM->TO	ELK CITY 230KV (ELKCTY-6) 230/138/13.8KV TRANSFORMER CKT 1	287	316	0.04601	116.3182	BASE CASE
FDNS	06ALL	4	15G	G14_074	FROM->TO	ELK CITY 230KV (ELKCTY-6) 230/138/13.8KV TRANSFORMER CKT 1	287	316	0.04601	115.4161	BASE CASE
FDNS	06ALL	4	15WP	G14_074	FROM->TO	ELK CITY 230KV (ELKCTY-6) 230/138/13.8KV TRANSFORMER CKT 1	287	316	0.05188	112.0283	BASE CASE
FDNS	06ALL	4	15WP	G14_074	FROM->TO	ELK CITY 230KV (ELKCTY-6) 230/138/13.8KV TRANSFORMER CKT 1	287	316	0.05188	111.0401	BASE CASE
FDNS	06ALL	4	20SP	G14_074	FROM->TO	ELK CITY 230KV (ELKCTY-6) 230/138/13.8KV TRANSFORMER CKT 1	272	316	0.05017	107.1637	BASE CASE
FDNS	06ALL	4	20SP	G14_074	FROM->TO	ELK CITY 230KV (ELKCTY-6) 230/138/13.8KV TRANSFORMER CKT 1	272	316	0.05017	106.9127	BASE CASE
FDNS	06ALL	4	20WP	G14_074	FROM->TO	ELK CITY 230KV (ELKCTY-6) 230/138/13.8KV TRANSFORMER CKT 1	287	316	0.04946	106.7868	BASE CASE
FDNS	06ALL	4	20WP	G14_074	FROM->TO	ELK CITY 230KV (ELKCTY-6) 230/138/13.8KV TRANSFORMER CKT 1	287	316	0.04946	106.1189	BASE CASE
FDNS	06ALL	4	15G	G14_074	FROM->TO	G14-057T 345.00 - SUNNYSIDE 345KV CKT 1	717	789	0.216	103.7139	CIMARRON - MINCO 345KV CKT 1
FDNS	06ALL	4	15WP	G14_074	FROM->TO	G14-057T 345.00 - SUNNYSIDE 345KV CKT 1	717	789	0.22125	100.717	CIMARRON - MINCO 345KV CKT 1
FDNS	06ALL	4	15G	G14_074	FROM->TO	G14-057T 345.00 - SUNNYSIDE 345KV CKT 1	717	789	0.216	99.6	GRACEMONT - MINCO 345KV CKT 1
FDNS	06ALL	4	15G	G14_074	FROM->TO	TUCO INTERCHANGE - TUCO_2 230.00 230KV CKT 1	478	502	0.3164	148.7289	TUCO INTERCHANGE - TUCO_2 345.00 345KV CKT 1
FDNS	06ALL	4	15SP	G14_074	FROM->TO	TUCO INTERCHANGE - TUCO_2 230.00 230KV CKT 1	478	502	0.3224	139.4418	TUCO INTERCHANGE - TUCO_2 345.00 345KV CKT 1
FDNS	06NR	4	15G	G14_074	FROM->TO	TUCO INTERCHANGE - TUCO_2 230.00 230KV CKT 1	478	502	0.14366	117.8451	TUCO INTERCHANGE - TUCO_2 345.00 345KV CKT 1
FDNS	06ALL	4	20SP	G14_074	FROM->TO	TUCO INTERCHANGE - TUCO_2 230.00 230KV CKT 1	478	502	0.32086	108.3093	TUCO INTERCHANGE - TUCO_2 345.00 345KV CKT 1
FDNS	06ALL	4	15WP	G14_074	FROM->TO	TUCO INTERCHANGE - TUCO_2 230.00 230KV CKT 1	557	557	0.32834	107.3541	TUCO INTERCHANGE - TUCO_2 345.00 345KV CKT 1
FDNS	06ALL	4	20WP	G14_074	FROM->TO	TUCO INTERCHANGE - TUCO_2 230.00 230KV CKT 1	557	557	0.31924	99.6	TUCO INTERCHANGE - TUCO_2 345.00 345KV CKT 1
FDNS	06ALL	4	15G	G14_074	FROM->TO	TUCO_2 345.00 (TUCO_2 XFMR) 345/230/13.2KV TRANSFORMER CKT 1	560	560	0.22216	127.7356	TUCO INTERCHANGE - TUCO_2 345.00 345KV CKT 1
FDNS	06ALL	4	15G	G14_074	FROM->TO	TUCO_2 345.00 (TUCO_2 XFMR) 345/230/13.2KV TRANSFORMER CKT 1	560	560	0.22216	126.397	TUCO INTERCHANGE - TUCO_2 345.00 345KV CKT 1
FDNS	06ALL	4	15SP	G14_074	FROM->TO	TUCO_2 345.00 (TUCO_2 XFMR) 345/230/13.2KV TRANSFORMER CKT 1	560	560	0.22813	114.1941	TUCO INTERCHANGE - TUCO_2 345.00 345KV CKT 1
FDNS	06ALL	4	15SP	G14_074	FROM->TO	TUCO_2 345.00 (TUCO_2 XFMR) 345/230/13.2KV TRANSFORMER CKT 1	560	560	0.22813	113.3239	TUCO INTERCHANGE - TUCO_2 345.00 345KV CKT 1
FDNS	06ALL	4	15WP	G14_074	FROM->TO	TUCO_2 345.00 (TUCO_2 XFMR) 345/230/13.2KV TRANSFORMER CKT 1	560	560	0.23375	108.1334	TUCO INTERCHANGE - TUCO_2 345.00 345KV CKT 1
FDNS	06ALL	4	15WP	G14_074	FROM->TO	TUCO_2 345.00 (TUCO_2 XFMR) 345/230/13.2KV TRANSFORMER CKT 1	560	560	0.23375	107.4733	TUCO INTERCHANGE - TUCO_2 345.00 345KV CKT 1
FDNS	06NR	4	15G	G14_074	FROM->TO	TUCO_2 345.00 (TUCO_2 XFMR) 345/230/13.2KV TRANSFORMER CKT 1	560	560	0.03693	105.1511	TUCO INTERCHANGE - TUCO_2 345.00 345KV CKT 1
FDNS	06NR	4	15G	G14_074	FROM->TO	TUCO_2 345.00 (TUCO_2 XFMR) 345/230/13.2KV TRANSFORMER CKT 1	560	560	0.03693	104.6026	TUCO INTERCHANGE - TUCO_2 345.00 345KV CKT 1
FDNS	06ALL	4	20WP	G14_074	FROM->TO	TUCO_2 345.00 (TUCO_2 XFMR) 345/230/13.2KV TRANSFORMER CKT 1	560	560	0.22513	102.8738	TUCO INTERCHANGE - TUCO_2 345.00 345KV CKT 1
FDNS	06ALL	4	20WP	G14_074	FROM->TO	TUCO_2 345.00 (TUCO_2 XFMR) 345/230/13.2KV TRANSFORMER CKT 1	560	560	0.22513	102.4022	TUCO INTERCHANGE - TUCO_2 345.00 345KV CKT 1
FDNS	00NR	5	25SP	G14_074	TO->FROM	CARLISLE INTERCHANGE - TUCO INTERCHANGE 230KV CKT 1	319	351	0.13874	103.4722	JONES STATION - TUCO INTERCHANGE 230KV CKT 1
FDNS	06ALL	5	15SP	G14_074	FROM->TO	CHISHOLM6 230.00 - ELK CITY 230KV 230KV CKT 1	353	353	0.04989	100.9761	BASE CASE
FDNS	06ALL	5	15SP	G14_074	FROM->TO	ELK CITY 230KV (ELKCTY-6) 230/138/13.8KV TRANSFORMER CKT 1	272	316	0.04989	129.9064	BASE CASE
FDNS	06ALL	5	15SP	G14_074	FROM->TO	ELK CITY 230KV (ELKCTY-6) 230/138/13.8KV TRANSFORMER CKT 1	272	316	0.04989	128.6412	BASE CASE
FDNS	06ALL	5	15G	G14_074	FROM->TO	ELK CITY 230KV (ELKCTY-6) 230/138/13.8KV TRANSFORMER CKT 1	287	316	0.04596	116.3419	BASE CASE
FDNS	06ALL	5	15G	G14_074	FROM->TO	ELK CITY 230KV (ELKCTY-6) 230/138/13.8KV TRANSFORMER CKT 1	287	316	0.04596	115.4406	BASE CASE
FDNS	06ALL	5	15WP	G14_074	FROM->TO	ELK CITY 230KV (ELKCTY-6) 230/138/13.8KV TRANSFORMER CKT 1	287	316	0.05183	112.0665	BASE CASE
FDNS	06ALL	5	15WP	G14_074	FROM->TO	ELK CITY 230KV (ELKCTY-6) 230/138/13.8KV TRANSFORMER CKT 1	287	316	0.05183	111.0777	BASE CASE
FDNS	06ALL	5	20SP	G14_074	FROM->TO	ELK CITY 230KV (ELKCTY-6) 230/138/13.8KV TRANSFORMER CKT 1	272	316	0.05012	107.1735	BASE CASE
FDNS	06ALL	5	20SP	G14_074	FROM->TO	ELK CITY 230KV (ELKCTY-6) 230/138/13.8KV TRANSFORMER CKT 1	272	316	0.05012	106.9225	BASE CASE
FDNS	06ALL	5	20WP	G14_074	FROM->TO	ELK CITY 230KV (ELKCTY-6) 230/138/13.8KV TRANSFORMER CKT 1	287	316	0.04942	106.7889	BASE CASE
FDNS	06ALL	5	20WP	G14_074	FROM->TO	ELK CITY 230KV (ELKCTY-6) 230/138/13.8KV TRANSFORMER CKT 1	287	316	0.04942	106.1215	BASE CASE
FDNS	06ALL	5	15G	G14_074	FROM->TO	G14-057T 345.00 - SUNNYSIDE 345KV CKT 1	717	789	0.21619	103.6748	CIMARRON - MINCO 345KV CKT 1
FDNS	06ALL	5	15WP	G14_074	FROM->TO	G14-057T 345.00 - SUNNYSIDE 345KV CKT 1	717	789	0.22141	100.7004	CIMARRON - MINCO 345KV CKT 1
FDNS	06ALL	5	15G	G14_074	FROM->TO	G14-057T 345.00 - SUNNYSIDE 345KV CKT 1	717	789	0.21619	99.6	GRACEMONT - MINCO 345KV CKT 1
FDNS	00NR	6	25SP	G14_074	TO->FROM	CARLISLE INTERCHANGE - TUCO INTERCHANGE 230KV CKT 1	319	351	0.13863	103.4261	JONES STATION - TUCO INTERCHANGE 230KV CKT 1
FDNS	08ALL	0	20SP	G15_003	FROM->TO	VIOLA 7 345.00 (VIOLA 1X) 345/138/13.8KV TRANSFORMER CKT 1	448	492.8	0.26865	102.3131	VIOLA 7 345.00 - WICHITA 345KV CKT 1
FDNS	08ALL	0	20SP	G15_003	FROM->TO	VIOLA 7 345.00 (VIOLA 1X) 345/138/13.8KV TRANSFORMER CKT 1	448	492.8	0.26865	101.3791	VIOLA 7 345.00 - WICHITA 345KV CKT 1
FDNS	08ALL	2	15SP	G15_003	FROM->TO	VIOLA 7 345.00 (VIOLA 1X) 345/138/13.8KV TRANSFORMER CKT 1	448	492.8	0.26807	101.8523	VIOLA 7 345.00 - WICHITA 345KV CKT 1
FDNS	08ALL	2	15SP	G15_003	FROM->TO	VIOLA 7 345.00 (VIOLA 1X) 345/138/13.8KV TRANSFORMER CKT 1	448	492.8	0.26807	101.0406	VIOLA 7 345.00 - WICHITA 345KV CKT 1
FDNS	08ALL	2	15G	G15_003	FROM->TO	VIOLA 7 345.00 (VIOLA 1X) 345/138/13.8KV TRANSFORMER CKT 1	448	492.8	0.26519	99.8000	VIOLA 7 345.00 - WICHITA 345KV CKT 1
FDNS	08ALL	3	15G	G15_003	FROM->TO	CLEARWATER - GILL ENERGY CENTER WEST 138KV CKT 1	143	143	0.03976	108.2121	BASE CASE
FDNSLock-Blown up	02ALL	0	15G	G15_006		Non-Converged Contingency	0	0	0.40165	-	SPSCONT-05AX
FDNSLock-Blown up	02ALL	0	15G	G15_006		Non-Converged Contingency	1420	1775	0.28886	-	G11-14T 345.00 - WOODWARD DISTRICT EHV 345KV CKT 1
FDNSLock-Blown up	02ALL	0	15G	G15_006		Non-Converged Contingency	1420	1775	0.28886	-	G11-14T 345.00 - WOODWARD DISTRICT EHV 345KV CKT 2
FDNSLock-Blown up	02ALL	0	15G	G15_006		Non-Converged Contingency	956	1052	0.2119	-	FINNEY SWITCHING STATION - Hitchland Interchange 345KV CKT 1
FDNSLock-Blown up	02ALL	0	15G	G15_006		Non-Converged Contingency	956	1052	0.2119	-	FINNEY SWITCHING STATION - HOLCOMB 345KV CKT 1
FDNSLock-Blown up	02ALL	0	15G	G15_006		Non-Converged Contingency	0	0	0.2119	-	SPP-SWPS-05
FDNSLock-Blown up	02ALL	0	15G	G15_006		Non-Converged Contingency	1420	1775	0.20082	-	G11_051T 345.00 - TATONGA7 345.00 345KV CKT 1

SOLUTION	GROUP	SCENARIO	SEASON	SOURCE	DIRECTION	MONITORED ELEMENT	RATEA (MVA)	RATEB(MVA)	TDF	TC%LOADING (% MVA)	CONTINGENCY
FDNSLock-Blown up	02ALL	0	15G	G15_006		Non-Converged Contingency	1420	1775	0.20082	-	G11_051T 345.00 - WOODWARD DISTRICT EHV 345KV CKT 1
FDNSLock-Blown up	02ALL	0	15G	G15_006		Non-Converged Contingency	1195	1195	0.20082	-	NORTHWEST - TATONGA7 345.00 345KV CKT 1
FDNSLock-Blown up	02ALL	0	15G	G15_006		Non-Converged Contingency	0	0	0.20082	-	SPSCONT-04
FDNSLock-Blown up	02ALL	0	15G	G15_006		Non-Converged Contingency	0	0	0.20082	-	SPSCONT-05B
FDNSLock-Blown up	02ALL	0	15G	G15_006		Non-Converged Contingency	1561	1793	0.12383	-	THISTLE7 345.00 - WOODWARD DISTRICT EHV 345KV CKT 1
FDNSLock-Blown up	02ALL	0	15G	G15_006		Non-Converged Contingency	1561	1793	0.12383	-	THISTLE7 345.00 - WOODWARD DISTRICT EHV 345KV CKT 2
FDNSLock-Blown up	02ALL	0	15G	G15_006		Non-Converged Contingency	956	1052	0.11478	-	G14_038T 345.00 - Hitchland Interchange 345KV CKT 1
FDNSLock-Blown up	02ALL	0	15G	G15_006		Non-Converged Contingency	956	1052	0.11478	-	G14_038T 345.00 - POTTER COUNTY INTERCHANGE 345KV CKT 1
FDNSLock-Blown up	02ALL	0	15G	G15_006		Non-Converged Contingency	560	560	0.11478	-	POTTER COUNTY INTERCHANGE (WAUK 90343-A) 345/230/13.2KV TRANSFORMER CKT 1
FDNSLock-Blown up	02ALL	0	15G	G15_006		Non-Converged Contingency	0	0	0.11111	-	SPP-SWPS-02A
FDNSLock-Blown up	02ALL	0	15G	G15_006		Non-Converged Contingency	1413	1517	0.11071	-	BUCKNER7 345.00 - SPEARVILLE 345KV CKT 1
FDNSLock-Blown up	02ALL	0	15G	G15_006		Non-Converged Contingency	0	0	0.07407	-	SPP-SWPS-02
FDNSLock-Blown up	02ALL	0	15G	G15_006		Non-Converged Contingency	0	0	0.06972	-	SPP-SWPS-03
FDNSLock-Blown up	02ALL	0	15G	G15_006		Non-Converged Contingency	956	994	0.06572	-	G14-074T 345.00 - OKLAUNION 345KV CKT 1
FDNSLock-Blown up	02ALL	0	15G	G15_006		Non-Converged Contingency	956	994	0.06572	-	G14-074T 345.00 - TUCO INTERCHANGE 345KV CKT 1
FDNSLock-Blown up	02ALL	0	15G	G15_006		Non-Converged Contingency	439	439	0.03704	-	ELK CITY 230KV - SWEETWATER 230KV CKT 1
FDNSLock-Blown up	02ALL	0	15G	G15_006		Non-Converged Contingency	287	316	0.03704	-	ELK CITY 230KV (ELKCTY-6) 230/138/13.8KV TRANSFORMER CKT 1
FDNSLock-Blown up	02ALL	0	15G	G15_006		Non-Converged Contingency	319	351	0.03704	-	GRAPEVINE INTERCHANGE - STATELINE INTERCHANGE 230KV CKT 1
FDNSLock-Blown up	02ALL	0	15G	G15_006		Non-Converged Contingency	349	395	0.03704	-	STATELINE INTERCHANGE - STLN-DEMARC6 230KV CKT 1
FDNSLock-Blown up	02ALL	0	15G	G15_006		Non-Converged Contingency	396	441	0.03704	-	STLN-DEMARC6 - SWEETWATER 230KV CKT 1
FDNSLock-Blown up	02ALL	0	15SP	G15_006		Non-Converged Contingency	1420	1775	0.29252	-	G11-14T 345.00 - WOODWARD DISTRICT EHV 345KV CKT 1
FDNSLock-Blown up	02ALL	0	15SP	G15_006		Non-Converged Contingency	1420	1775	0.29252	-	G11-14T 345.00 - WOODWARD DISTRICT EHV 345KV CKT 2
FDNSLock-Blown up	02ALL	0	15SP	G15_006		Non-Converged Contingency	956	1052	0.21772	-	FINNEY SWITCHING STATION - Hitchland Interchange 345KV CKT 1
FDNSLock-Blown up	02ALL	0	15SP	G15_006		Non-Converged Contingency	956	1052	0.21772	-	FINNEY SWITCHING STATION - HOLCOMB 345KV CKT 1
FDNSLock-Blown up	02ALL	0	15SP	G15_006		Non-Converged Contingency	0	0	0.21772	-	SPP-SWPS-05
FDNSLock-Blown up	02ALL	0	15WP	G15_006		Non-Converged Contingency	1420	1775	0.29365	-	G11-14T 345.00 - WOODWARD DISTRICT EHV 345KV CKT 1
FDNSLock-Blown up	02ALL	0	15WP	G15_006		Non-Converged Contingency	1420	1775	0.29365	-	G11-14T 345.00 - WOODWARD DISTRICT EHV 345KV CKT 2
FDNSLock-Blown up	02ALL	0	15WP	G15_006		Non-Converged Contingency	987	1083	0.21799	-	FINNEY SWITCHING STATION - Hitchland Interchange 345KV CKT 1
FDNSLock-Blown up	02ALL	0	15WP	G15_006		Non-Converged Contingency	956	1052	0.21799	-	FINNEY SWITCHING STATION - HOLCOMB 345KV CKT 1
FDNSLock-Blown up	02ALL	0	15WP	G15_006		Non-Converged Contingency	0	0	0.21799	-	SPP-SWPS-05
FDNSLock-Blown up	02ALL	0	20SP	G15_006		Non-Converged Contingency	956	1052	0.21448	-	FINNEY SWITCHING STATION - HOLCOMB 345KV CKT 1
FDNSLock-Blown up	02ALL	0	20WP	G15_006		Non-Converged Contingency	1420	1775	0.28749	-	G11-14T 345.00 - WOODWARD DISTRICT EHV 345KV CKT 1
FDNSLock-Blown up	02ALL	0	20WP	G15_006		Non-Converged Contingency	1420	1775	0.28749	-	G11-14T 345.00 - WOODWARD DISTRICT EHV 345KV CKT 2
FDNSLock-Blown up	02ALL	0	20WP	G15_006		Non-Converged Contingency	987	1083	0.21216	-	FINNEY SWITCHING STATION - Hitchland Interchange 345KV CKT 1
FDNSLock-Blown up	02ALL	0	20WP	G15_006		Non-Converged Contingency	956	1052	0.21216	-	FINNEY SWITCHING STATION - HOLCOMB 345KV CKT 1
FDNSLock-Blown up	02ALL	0	20WP	G15_006		Non-Converged Contingency	0	0	0.21216	-	SPP-SWPS-05
FDNSLock-Blown up	02ALL	2	15G	G15_006		Non-Converged Contingency	0	0	0.39852	-	SPSCONT-05AX
FDNSLock-Blown up	02ALL	2	15G	G15_006		Non-Converged Contingency	1420	1775	0.28442	-	G11-14T 345.00 - WOODWARD DISTRICT EHV 345KV CKT 1
FDNSLock-Blown up	02ALL	2	15G	G15_006		Non-Converged Contingency	1420	1775	0.28442	-	G11-14T 345.00 - WOODWARD DISTRICT EHV 345KV CKT 2
FDNSLock-Blown up	02ALL	2	15G	G15_006		Non-Converged Contingency	956.09	1051.7	0.2236	-	Hitchland Interchange - WALKTAP7 345.00 345KV CKT 1
FDNSLock-Blown up	02ALL	2	15G	G15_006		Non-Converged Contingency	1420	1775	0.19926	-	G11_051T 345.00 - TATONGA7 345.00 345KV CKT 1
FDNSLock-Blown up	02ALL	2	15G	G15_006		Non-Converged Contingency	1420	1775	0.19926	-	G11_051T 345.00 - WOODWARD DISTRICT EHV 345KV CKT 1
FDNSLock-Blown up	02ALL	2	15G	G15_006		Non-Converged Contingency	1195	1195	0.19926	-	NORTHWEST - TATONGA7 345.00 345KV CKT 1
FDNSLock-Blown up	02ALL	2	15G	G15_006		Non-Converged Contingency	0	0	0.19926	-	SPSCONT-04
FDNSLock-Blown up	02ALL	2	15G	G15_006		Non-Converged Contingency	0	0	0.19926	-	SPSCONT-05B
FDNSLock-Blown up	02ALL	2	15G	G15_006		Non-Converged Contingency	956	1052	0.18857	-	FINNEY SWITCHING STATION - HOLCOMB 345KV CKT 1
FDNSLock-Blown up	02ALL	2	15G	G15_006		Non-Converged Contingency	956.09	1051.7	0.18857	-	FINNEY SWITCHING STATION - WALKTAP7 345.00 345KV CKT 1
FDNSLock-Blown up	02ALL	2	15G	G15_006		Non-Converged Contingency	560	560	0.11324	-	POTTER COUNTY INTERCHANGE (WAUK 90343-A) 345/230/13.2KV TRANSFORMER CKT 1
FDNSLock-Blown up	02ALL	2	15G	G15_006		Non-Converged Contingency	956	994	0.06471	-	G14-074T 345.00 - OKLAUNION 345KV CKT 1
FDNSLock-Blown up	02ALL	2	15G	G15_006		Non-Converged Contingency	956	994	0.06471	-	G14-074T 345.00 - TUCO INTERCHANGE 345KV CKT 1
FDNSLock-Blown up	02ALL	2	15SP	G15_006		Non-Converged Contingency	956.09	1051.7	0.23253	-	Hitchland Interchange - WALKTAP7 345.00 345KV CKT 1
FDNSLock-Blown up	02ALL	2	15SP	G15_006		Non-Converged Contingency	956	1052	0.19635	-	FINNEY SWITCHING STATION - HOLCOMB 345KV CKT 1
FDNSLock-Blown up	02ALL	2	15WP	G15_006		Non-Converged Contingency	987.2	1082.8	0.23248	-	Hitchland Interchange - WALKTAP7 345.00 345KV CKT 1
FDNSLock-Blown up	02ALL	2	15WP	G15_006		Non-Converged Contingency	956	1052	0.19635	-	FINNEY SWITCHING STATION - HOLCOMB 345KV CKT 1
FDNSLock-Blown up	02ALL	2	15WP	G15_006		Non-Converged Contingency	987.2	1082.8	0.19635	-	FINNEY SWITCHING STATION - WALKTAP7 345.00 345KV CKT 1
FDNSLock-Blown up	02ALL	2	20WP	G15_006		Non-Converged Contingency	987.2	1082.8	0.22755	-	Hitchland Interchange - WALKTAP7 345.00 345KV CKT 1
FDNSLock-Blown up	02ALL	3	15G	G15_006		Non-Converged Contingency	1420	1775	0.29492	-	G11-14T 345.00 - WOODWARD DISTRICT EHV 345KV CKT 1
FDNSLock-Blown up	02ALL	3	15G	G15_006		Non-Converged Contingency	1420	1775	0.29492	-	G11-14T 345.00 - WOODWARD DISTRICT EHV 345KV CKT 2
FDNSLock-Blown up	02ALL	3	15G	G15_006		Non-Converged Contingency	956.09	1051.7	0.21303	-	Hitchland Interchange - WALKTAP7 345.00 345KV CKT 1
FDNSLock-Blown up	02ALL	3	15G	G15_006		Non-Converged Contingency	956	1052	0.17961	-	FINNEY SWITCHING STATION - HOLCOMB 345KV CKT 1
FDNSLock-Blown up	02ALL	3	15G	G15_006		Non-Converged Contingency	956.09	1051.7	0.17961	-	FINNEY SWITCHING STATION - WALKTAP7 345.00 345KV CKT 1
FDNSLock-Blown up	02ALL	3	15SP	G15_006		Non-Converged Contingency	956.09	1051.7	0.22191	-	Hitchland Interchange - WALKTAP7 345.00 345KV CKT 1
FDNSLock-Blown up	02ALL	3	15WP	G15_006		Non-Converged Contingency	987.2	1082.8	0.22173	-	Hitchland Interchange - WALKTAP7 345.00 345KV CKT 1
FDNSLock-Blown up	02ALL	3	20WP	G15_006		Non-Converged Contingency	987.2	1082.8	0.2179	-	Hitchland Interchange - WALKTAP7 345.00 345KV CKT 1
FDNSLock-Blown up	02ALL	4	15G	G15_006		Non-Converged Contingency	956.09	1051.7	0.19706	-	Hitchland Interchange - WALKTAP7 345.00 345KV CKT 1
FDNSLock-Blown up	02ALL	4	15WP	G15_006		Non-Converged Contingency	987.2	1082.8	0.2058	-	Hitchland Interchange - WALKTAP7 345.00 345KV CKT 1
FDNS	02ALL	0	15G	G15_006	FROM->TO	FPL SWITCH - MOORELAND 138KV CKT 1	287	287	0.06457	122.9988	BASE CASE
FDNS	02ALL	0	20WP	G15_006	FROM->TO	FPL SWITCH - MOORELAND 138KV CKT 1	287	287	0.07139	110.8654	BASE CASE
FDNS	02ALL	0	15WP	G15_006	FROM->TO	FPL SWITCH - MOORELAND 138KV CKT 1	287	287	0.069	108.2562	BASE CASE
FDNS	02ALL	0	15G	G15_006	TO->FROM	FPL SWITCH - WOODWARD 138KV CKT 1	287	287	0.06457	116.9552	BASE CASE
FDNS	02ALL	0	20WP	G15_006	TO->FROM	FPL SWITCH - WOODWARD 138KV CKT 1	287	287	0.07139	105.3177	BASE CASE
FDNS	02ALL	0	15WP	G15_006	TO->FROM	FPL SWITCH - WOODWARD 138KV CKT 1	287	287	0.069	102.5629	BASE CASE
FDNS	02ALL	0	15G	G15_006	TO->FROM	WOODWARD - WOODWARD EHV 138KV CKT 1	287	287	0.05213	100	BASE CASE
FDNS	02ALL	2	15G	G15_006	FROM->TO	FPL SWITCH - MOORELAND 138KV CKT 1	287	287	0.06406	121.3133	BASE CASE
FDNS	02ALL	2	20WP	G15_006	FROM->TO	FPL SWITCH - MOORELAND 138KV CKT 1	287	287	0.07022	109.2833	BASE CASE

SOLUTION	GROUP	SCENARIO	SEASON	SOURCE	DIRECTION	MONITORED ELEMENT	RATEA (MVA)	RATEB(MVA)	TDF	TC%LOADING (% MVA)	CONTINGENCY
FDNS	02ALL	2	15WP	G15_006	FROM->TO	FPL SWITCH - MOORELAND 138KV CKT 1	287	287	0.06805	106.4634	BASE CASE
FDNS	02ALL	2	15G	G15_006	TO->FROM	FPL SWITCH - WOODWARD 138KV CKT 1	287	287	0.06406	115.2688	BASE CASE
FDNS	02ALL	2	20WP	G15_006	TO->FROM	FPL SWITCH - WOODWARD 138KV CKT 1	287	287	0.07022	103.6736	BASE CASE
FDNS	02ALL	2	15WP	G15_006	TO->FROM	FPL SWITCH - WOODWARD 138KV CKT 1	287	287	0.06805	100.7	BASE CASE
FDNSLock-Blown up	09ALL	0	15G	G15_008		Non-Converged Contingency	720	720	0.03769	-	GRAND ISLAND - HOLT.CO3 345.00 345KV CKT 1
FDNSLock-Blown up	09ALL	0	15SP	G15_008		Non-Converged Contingency	720	720	0.03767	-	GRAND ISLAND - HOLT.CO3 345.00 345KV CKT 1
FDNSLock-Blown up	09ALL	0	15WP	G15_008		Non-Converged Contingency	720	720	0.03687	-	GRAND ISLAND - HOLT.CO3 345.00 345KV CKT 1
FDNS	09ALL	0	15G	G15_008	FROM->TO	ALBION - GENOA 115KV CKT 1	137	137	0.25175	109.7479	COUNTY LINE - NELIGH.EAST7115.00 115KV CKT 1
FDNS	09ALL	0	15G	G15_008	FROM->TO	ALBION - GENOA 115KV CKT 1	137	137	0.25175	109.7003	LN-1163-2
FDNS	09ALL	0	15G	G15_008	FROM->TO	ALBION - GENOA 115KV CKT 1	137	137	0.25175	109.5768	BATTLE CREEK - COUNTY LINE 115KV CKT 1
FDNS	09ALL	0	15G	G15_008	FROM->TO	ALBION - GENOA 115KV CKT 1	137	137	0.25175	107.9803	BATTLE CREEK - NORTH NORFOLK 115KV CKT 1
FDNS	09ALL	0	15G	G15_008	TO->FROM	ALBION - PETERSBURG 115KV CKT 1	137	137	0.37876	154.8701	LN-1163-2
FDNS	09ALL	0	15G	G15_008	TO->FROM	ALBION - PETERSBURG 115KV CKT 1	137	137	0.37876	154.8480	COUNTY LINE - NELIGH.EAST7115.00 115KV CKT 1
FDNS	09ALL	0	15G	G15_008	TO->FROM	ALBION - PETERSBURG 115KV CKT 1	137	137	0.37876	154.5864	BATTLE CREEK - COUNTY LINE 115KV CKT 1
FDNS	09ALL	0	15WP	G15_008	TO->FROM	ALBION - PETERSBURG 115KV CKT 1	137	137	0.37869	153.2615	LN-1163-2
FDNS	09ALL	0	15WP	G15_008	TO->FROM	ALBION - PETERSBURG 115KV CKT 1	137	137	0.37869	153.1926	COUNTY LINE - NELIGH.EAST7115.00 115KV CKT 1
FDNS	09ALL	0	15WP	G15_008	TO->FROM	ALBION - PETERSBURG 115KV CKT 1	137	137	0.37869	153.0361	BATTLE CREEK - COUNTY LINE 115KV CKT 1
FDNS	09ALL	0	15G	G15_008	TO->FROM	ALBION - PETERSBURG 115KV CKT 1	137	137	0.37876	152.2926	BATTLE CREEK - NORTH NORFOLK 115KV CKT 1
FDNS	09ALL	0	15SP	G15_008	TO->FROM	ALBION - PETERSBURG 115KV CKT 1	137	137	0.37877	149.2833	LN-1163-2
FDNS	09ALL	0	15SP	G15_008	TO->FROM	ALBION - PETERSBURG 115KV CKT 1	137	137	0.37877	149.1657	COUNTY LINE - NELIGH.EAST7115.00 115KV CKT 1
FDNS	09ALL	0	15WP	G15_008	TO->FROM	ALBION - PETERSBURG 115KV CKT 1	137	137	0.37869	148.4734	BATTLE CREEK - NORTH NORFOLK 115KV CKT 1
FDNS	09ALL	0	15SP	G15_008	TO->FROM	ALBION - PETERSBURG 115KV CKT 1	137	137	0.37877	147.4188	BATTLE CREEK - COUNTY LINE 115KV CKT 1
FDNS	09ALL	0	15SP	G15_008	TO->FROM	ALBION - PETERSBURG 115KV CKT 1	137	137	0.37877	138.6036	BATTLE CREEK - NORTH NORFOLK 115KV CKT 1
FDNS	09NR	0	15G	G15_008	TO->FROM	ALBION - PETERSBURG 115KV CKT 1	137	137	0.38313	130.7394	LN-1163-2
FDNS	09NR	0	15G	G15_008	TO->FROM	ALBION - PETERSBURG 115KV CKT 1	137	137	0.38313	130.6700	COUNTY LINE - NELIGH.EAST7115.00 115KV CKT 1
FDNS	09NR	0	15G	G15_008	TO->FROM	ALBION - PETERSBURG 115KV CKT 1	137	137	0.38313	130.5191	BATTLE CREEK - COUNTY LINE 115KV CKT 1
FDNS	09NR	0	15G	G15_008	TO->FROM	ALBION - PETERSBURG 115KV CKT 1	137	137	0.38313	128.5785	BATTLE CREEK - NORTH NORFOLK 115KV CKT 1
FDNS	09ALL	0	15WP	G15_008	TO->FROM	ALBION - PETERSBURG 115KV CKT 1	137	137	0.27079	126.1127	BLOOMFIELD - GAVINS POINT 115KV CKT 1
FDNS	09ALL	0	15G	G15_008	TO->FROM	ALBION - PETERSBURG 115KV CKT 1	137	137	0.27083	125.5575	BLOOMFIELD - GAVINS POINT 115KV CKT 1
FDNS	09ALL	0	15SP	G15_008	TO->FROM	ALBION - PETERSBURG 115KV CKT 1	137	137	0.27087	124.2243	BLOOMFIELD - GAVINS POINT 115KV CKT 1
FDNS	09ALL	0	15SP	G15_008	TO->FROM	ALBION - PETERSBURG 115KV CKT 1	137	137	0.27441	116.7655	LN-1164
FDNS	09ALL	0	15SP	G15_008	TO->FROM	ALBION - PETERSBURG 115KV CKT 1	137	137	0.27441	116.6701	CLEARWATER - NELIGH 115KV CKT 1
FDNS	09ALL	0	15SP	G15_008	TO->FROM	ALBION - PETERSBURG 115KV CKT 1	137	137	0.22272	116.5193	KELLY - MEADOWGROVE4230.00 230KV CKT 1
FDNS	09ALL	0	15SP	G15_008	TO->FROM	ALBION - PETERSBURG 115KV CKT 1	137	137	0.27087	116.3462	CREIGHTON - NELIGH.EAST7115.00 115KV CKT 1
FDNS	09ALL	0	15SP	G15_008	TO->FROM	ALBION - PETERSBURG 115KV CKT 1	137	137	0.21621	114.5525	BROKEN BOW - LOUP CITY 115KV CKT 1
FDNS	09ALL	0	15SP	G15_008	TO->FROM	ALBION - PETERSBURG 115KV CKT 1	137	137	0.27441	114.2061	CLEARWATER - ONEILL 115KV CKT 1
FDNS	09ALL	0	15SP	G15_008	TO->FROM	ALBION - PETERSBURG 115KV CKT 1	137	137	0.22321	112.9939	GRPRAR1-LNX3345.00 - HOLT.CO3 345.00 345KV CKT 1
FDNS	09ALL	0	15SP	G15_008	TO->FROM	ALBION - PETERSBURG 115KV CKT 1	137	137	0.22321	112.9892	GRPRAR1-LNX3345.00 - YANKTON 345KV CKT Z
FDNS	09ALL	0	15WP	G15_008	TO->FROM	ALBION - PETERSBURG 115KV CKT 1	137	137	0.27079	112.4778	CREIGHTON - NELIGH.EAST7115.00 115KV CKT 1
FDNS	09ALL	0	15WP	G15_008	TO->FROM	ALBION - PETERSBURG 115KV CKT 1	137	137	0.27431	111.4071	LN-1164
FDNS	09ALL	0	15WP	G15_008	TO->FROM	ALBION - PETERSBURG 115KV CKT 1	137	137	0.27431	111.3925	CLEARWATER - NELIGH 115KV CKT 1
FDNS	09ALL	0	15SP	G15_008	TO->FROM	ALBION - PETERSBURG 115KV CKT 1	137	137	0.22203	111.2176	GEN640010 1-GERALD GENTLEMAN STATION UNIT 1
FDNS	09ALL	0	15SP	G15_008	TO->FROM	ALBION - PETERSBURG 115KV CKT 1	137	137	0.22203	111.1392	GEN640011 2-GERALD GENTLEMAN STATION UNIT 2
FDNS	09ALL	0	15WP	G15_008	TO->FROM	ALBION - PETERSBURG 115KV CKT 1	137	137	0.27431	110.8700	CLEARWATER - ONEILL 115KV CKT 1
FDNS	09ALL	0	15SP	G15_008	TO->FROM	ALBION - PETERSBURG 115KV CKT 1	137	137	0.22203	110.7609	GEN640428 1-BRKNBW.GEN1W0.6900
FDNS	09ALL	0	15SP	G15_008	TO->FROM	ALBION - PETERSBURG 115KV CKT 1	137	137	0.2308	110.7553	GAVINS POINT - YANKON JCT 115KV CKT 1
FDNS	09ALL	0	15SP	G15_008	TO->FROM	ALBION - PETERSBURG 115KV CKT 1	137	137	0.22391	110.7505	NEB02WAPAB2
FDNS	09ALL	0	15SP	G15_008	TO->FROM	ALBION - PETERSBURG 115KV CKT 1	137	137	0.22203	110.5701	GEN640449 W-BRKNBW.GEN2W0.6900
FDNS	09ALL	0	15SP	G15_008	TO->FROM	ALBION - PETERSBURG 115KV CKT 1	137	137	0.22487	110.1134	COLUMEAST - SHELL CREEK 345KV CKT 1
FDNS	09ALL	0	15SP	G15_008	TO->FROM	ALBION - PETERSBURG 115KV CKT 1	137	137	0.22391	110.0869	GAVINS POINT - HARTINGTON 115KV CKT 1
FDNS	09ALL	0	15G	G15_008	TO->FROM	ALBION - PETERSBURG 115KV CKT 1	137	137	0.27083	110.0651	CREIGHTON - NELIGH.EAST7115.00 115KV CKT 1
FDNS	09ALL	0	15SP	G15_008	TO->FROM	ALBION - PETERSBURG 115KV CKT 1	137	137	0.22387	109.9675	GAVINS POINT - SPIRIT MOUND 115KV CKT 1
FDNS	09ALL	0	15WP	G15_008	TO->FROM	ALBION - PETERSBURG 115KV CKT 1	137	137	0.21614	109.6634	BROKEN BOW - LOUP CITY 115KV CKT 1
FDNS	09ALL	0	15WP	G15_008	TO->FROM	ALBION - PETERSBURG 115KV CKT 1	137	137	0.22261	109.4695	KELLY - MEADOWGROVE4230.00 230KV CKT 1
FDNS	09ALL	0	15G	G15_008	TO->FROM	ALBION - PETERSBURG 115KV CKT 1	137	137	0.27436	108.6045	LN-1164
FDNS	09ALL	0	15G	G15_008	TO->FROM	ALBION - PETERSBURG 115KV CKT 1	137	137	0.27436	108.5913	CLEARWATER - NELIGH 115KV CKT 1
FDNS	09ALL	0	15WP	G15_008	TO->FROM	ALBION - PETERSBURG 115KV CKT 1	137	137	0.27079	108.2435	BLOOMFIELD - CREIGHTON 115KV CKT 1
FDNS	09ALL	0	15G	G15_008	TO->FROM	ALBION - PETERSBURG 115KV CKT 1	137	137	0.27436	108.1803	CLEARWATER - ONEILL 115KV CKT 1
FDNS	09ALL	0	15SP	G15_008	TO->FROM	ALBION - PETERSBURG 115KV CKT 1	137	137	0.22203	107.7181	BASE CASE
FDNS	09ALL	0	15SP	G15_008	TO->FROM	ALBION - PETERSBURG 115KV CKT 1	137	137	0.22203	107.5418	NUCOR-1
FDNS	09ALL	0	15G	G15_008	TO->FROM	ALBION - PETERSBURG 115KV CKT 1	137	137	0.27083	107.0769	BLOOMFIELD - CREIGHTON 115KV CKT 1
FDNS	09ALL	0	15WP	G15_008	TO->FROM	ALBION - PETERSBURG 115KV CKT 1	137	137	0.2307	106.6417	GAVINS POINT - YANKON JCT 115KV CKT 1
FDNS	09ALL	0	15G	G15_008	TO->FROM	ALBION - PETERSBURG 115KV CKT 1	137	137	0.22268	106.2506	KELLY - MEADOWGROVE4230.00 230KV CKT 1
FDNS	09ALL	0	15G	G15_008	TO->FROM	ALBION - PETERSBURG 115KV CKT 1	137	137	0.2162	105.8650	BROKEN BOW - LOUP CITY 115KV CKT 1
FDNS	09NR	0	15G	G15_008	TO->FROM	ALBION - PETERSBURG 115KV CKT 1	137	137	0.27609	105.6912	BLOOMFIELD - GAVINS POINT 115KV CKT 1
FDNS	09ALL	0	15SP	G15_008	TO->FROM	ALBION - PETERSBURG 115KV CKT 1	137	137	0.22272	105.5977	FT RANDAL - G14_023T 230.00 230KV CKT 1
FDNS	09ALL	0	15SP	G15_008	TO->FROM	ALBION - PETERSBURG 115KV CKT 1	137	137	0.22165	105.5537	MCCOOL - MOORE 345KV CKT 1
FDNS	09ALL	0	15SP	G15_008	TO->FROM	ALBION - PETERSBURG 115KV CKT 1	137	137	0.22173	105.2836	GRAND ISLAND - MCCOOL 345KV CKT 1
FDNS	09ALL	0	15SP	G15_008	TO->FROM	ALBION - PETERSBURG 115KV CKT 1	137	137	0.22203	105.0942	GEN659111 2-LELAND OLDS UNIT2
FDNS	09ALL	0	15SP	G15_008	TO->FROM	ALBION - PETERSBURG 115KV CKT 1	137	137	0.21087	105.0563	NELIGH - NELIGH.EAST7115.00 115KV CKT 1
FDNS	09ALL	0	15WP	G15_008	TO->FROM	ALBION - PETERSBURG 115KV CKT 1	137	137	0.24567	104.9952	LN-WAPA6
FDNS	09ALL	0	15WP	G15_008	TO->FROM	ALBION - PETERSBURG 115KV CKT 1	137	137	0.24567	104.9952	NEB001NPPB2
FDNS	09ALL	0	15WP	G15_008	TO->FROM	ALBION - PETERSBURG 115KV CKT 1	137	137	0.24567	104.9119	ONEILL - SPENCER 115KV CKT 1
FDNS	09ALL	0	15SP	G15_008	TO->FROM	ALBION - PETERSBURG 115KV CKT 1	137	137	0.22203	104.8750	GEN640421 1-CROFTON HILLS WIND
FDNS	09ALL	0	15SP	G15_008	TO->FROM	ALBION - PETERSBURG 115KV CKT 1	137	137	0.22203	104.8484	GEN659103 1-ANTELOPE VALLEY UNIT1

SOLUTION	GROUP	SCENARIO	SEASON	SOURCE	DIRECTION	MONITORED ELEMENT	RATEA (MVA)	RATEB(MVA)	TDF	TC%LOADING (% MVA)	CONTINGENCY
FDNS	09ALL	0	15SP	G15_008	TO->FROM	ALBION - PETERSBURG 115KV CKT 1	137	137	0.22203	104.8484	GEN659107 2-ANTELOPE VALLEY UNIT2
FDNS	09ALL	0	15SP	G15_008	TO->FROM	ALBION - PETERSBURG 115KV CKT 1	137	137	0.22321	104.8149	FTTHOM2-LNX3345.00 - GRPRAR2-LNX3345.00 345KV CKT 1
FDNS	09ALL	0	15SP	G15_008	TO->FROM	ALBION - PETERSBURG 115KV CKT 1	137	137	0.22321	104.6756	GRPRAR2-LNX3345.00 - YANKTON 345KV CKT Z
FDNS	09ALL	0	15WP	G15_008	TO->FROM	ALBION - PETERSBURG 115KV CKT 1	137	137	0.22193	104.6577	GEN640428 1-BRKNBW.GEN1W0.6900
FDNS	09ALL	0	15SP	G15_008	TO->FROM	ALBION - PETERSBURG 115KV CKT 1	137	137	0.22321	104.6517	FT THOMPSON - FTTHOM2-LNX3345.00 345KV CKT Z
FDNS	09ALL	0	15WP	G15_008	TO->FROM	ALBION - PETERSBURG 115KV CKT 1	137	137	0.22193	104.4580	GEN640449 W-BRKNBW.GEN2W0.6900
FDNS	09ALL	0	15WP	G15_008	TO->FROM	ALBION - PETERSBURG 115KV CKT 1	137	137	0.22193	104.4418	GEN640010 1-GERALD GENTLEMAN STATION UNIT 1
FDNS	09ALL	0	15WP	G15_008	TO->FROM	ALBION - PETERSBURG 115KV CKT 1	137	137	0.22783	104.3884	UTICA - YANKON JCT 115KV CKT 1
FDNS	09ALL	0	15WP	G15_008	TO->FROM	ALBION - PETERSBURG 115KV CKT 1	137	137	0.22381	104.3875	NEB02WAPAB2
FDNS	09ALL	0	15SP	G15_008	TO->FROM	ALBION - PETERSBURG 115KV CKT 1	137	137	0.22203	104.3828	SPALDING 115KV SWITCHED SHUNT
FDNS	09ALL	0	15WP	G15_008	TO->FROM	ALBION - PETERSBURG 115KV CKT 1	137	137	0.22378	104.3739	GAVINS POINT - SPIRIT MOUND 115KV CKT 1
FDNS	09ALL	0	15G	G15_008	TO->FROM	ALBION - PETERSBURG 115KV CKT 1	137	137	0.24572	104.3721	LN-WAPA6
FDNS	09ALL	0	15G	G15_008	TO->FROM	ALBION - PETERSBURG 115KV CKT 1	137	137	0.24572	104.3721	NEB001NPPB2
FDNS	09ALL	0	15WP	G15_008	TO->FROM	ALBION - PETERSBURG 115KV CKT 1	137	137	0.22309	104.3474	GRPRAR1-LNX3345.00 - YANKTON 345KV CKT Z
FDNS	09ALL	0	15WP	G15_008	TO->FROM	ALBION - PETERSBURG 115KV CKT 1	137	137	0.22309	104.3466	GRPRAR1-LNX3345.00 - HOLT.CO3 345.00 345KV CKT 1
FDNS	09ALL	0	15G	G15_008	TO->FROM	ALBION - PETERSBURG 115KV CKT 1	137	137	0.24572	104.3393	ONEILL - SPENCER 115KV CKT 1
FDNSLock	09ALL	0	15SP	G15_008	TO->FROM	ALBION - PETERSBURG 115KV CKT 1	137	137	0.22203	104.3303	SPALDING 115KV SWITCHED SHUNT
FDNS	09ALL	0	15G	G15_008	TO->FROM	ALBION - PETERSBURG 115KV CKT 1	137	137	0.24572	103.9692	FT RANDAL - SPENCER 115KV CKT 1
FDNS	09ALL	0	15WP	G15_008	TO->FROM	ALBION - PETERSBURG 115KV CKT 1	137	137	0.24567	103.9359	FT RANDAL - SPENCER 115KV CKT 1
FDNS	09ALL	0	15SP	G15_008	TO->FROM	ALBION - PETERSBURG 115KV CKT 1	137	137	0.20607	103.8927	NELIGH - NELIGH.EAST7115.00 115KV CKT 2
FDNS	09ALL	0	15WP	G15_008	TO->FROM	ALBION - PETERSBURG 115KV CKT 1	137	137	0.22381	103.8149	GAVINS POINT - HARTINGTON 115KV CKT 1
FDNS	09ALL	0	15WP	G15_008	TO->FROM	ALBION - PETERSBURG 115KV CKT 1	137	137	0.2335	103.7886	HOSKINS - NORTH NORFOLK 115KV CKT 1
FDNS	09ALL	0	15SP	G15_008	TO->FROM	ALBION - PETERSBURG 115KV CKT 1	137	137	0.24575	103.6458	LN-WAPA6
FDNS	09ALL	0	15SP	G15_008	TO->FROM	ALBION - PETERSBURG 115KV CKT 1	137	137	0.24575	103.6458	NEB001NPPB2
FDNS	09ALL	0	15SP	G15_008	TO->FROM	ALBION - PETERSBURG 115KV CKT 1	137	137	0.24575	103.5657	ONEILL - SPENCER 115KV CKT 1
FDNS	09ALL	0	15SP	G15_008	TO->FROM	ALBION - PETERSBURG 115KV CKT 1	137	137	0.22203	103.5033	ALBION 115KV SWITCHED SHUNT
FDNSLock	09ALL	0	15SP	G15_008	TO->FROM	ALBION - PETERSBURG 115KV CKT 1	137	137	0.22203	103.4861	ALBION 115KV SWITCHED SHUNT
FDNS	09ALL	0	15G	G15_008	TO->FROM	ALBION - PETERSBURG 115KV CKT 1	137	137	0.23076	102.9979	GAVINS POINT - YANKON JCT 115KV CKT 1
FDNS	09ALL	0	15SP	G15_008	TO->FROM	ALBION - PETERSBURG 115KV CKT 1	137	137	0.24575	102.7416	FT RANDAL - SPENCER 115KV CKT 1
FDNS	09ALL	0	15SP	G15_008	TO->FROM	ALBION - PETERSBURG 115KV CKT 1	137	137	0.22203	102.2456	GEN640418 1-ELKHORN RIDGE WIND
FDNS	09ALL	0	15G	G15_008	TO->FROM	ALBION - PETERSBURG 115KV CKT 1	137	137	0.22318	101.9198	GRPRAR1-LNX3345.00 - HOLT.CO3 345.00 345KV CKT 1
FDNS	09ALL	0	15G	G15_008	TO->FROM	ALBION - PETERSBURG 115KV CKT 1	137	137	0.22318	101.9138	GRPRAR1-LNX3345.00 - YANKTON 345KV CKT Z
FDNS	09ALL	0	15G	G15_008	TO->FROM	ALBION - PETERSBURG 115KV CKT 1	137	137	0.22788	101.7945	UTICA - YANKON JCT 115KV CKT 1
FDNS	09ALL	0	15G	G15_008	TO->FROM	ALBION - PETERSBURG 115KV CKT 1	137	137	0.22199	101.7573	GEN640428 1-BRKNBW.GEN1W0.6900
FDNS	09ALL	0	15G	G15_008	TO->FROM	ALBION - PETERSBURG 115KV CKT 1	137	137	0.23356	101.6284	HOSKINS - NORTH NORFOLK 115KV CKT 1
FDNS	09ALL	0	15WP	G15_008	TO->FROM	ALBION - PETERSBURG 115KV CKT 1	137	137	0.22193	101.5598	BASE CASE
FDNS	09ALL	0	15G	G15_008	TO->FROM	ALBION - PETERSBURG 115KV CKT 1	137	137	0.22199	101.5565	GEN640449 W-BRKNBW.GEN2W0.6900
FDNS	09ALL	0	15G	G15_008	TO->FROM	ALBION - PETERSBURG 115KV CKT 1	137	137	0.22383	101.4827	GAVINS POINT - SPIRIT MOUND 115KV CKT 1
FDNS	09ALL	0	15G	G15_008	TO->FROM	ALBION - PETERSBURG 115KV CKT 1	137	137	0.22563	101.1048	DAK02WAPAB2
FDNS	09ALL	0	15G	G15_008	TO->FROM	ALBION - PETERSBURG 115KV CKT 1	137	137	0.22387	101.0334	NEB02WAPAB2
FDNS	09ALL	0	15G	G15_008	TO->FROM	ALBION - PETERSBURG 115KV CKT 1	137	137	0.22483	100.9519	COLUMEAST - SHELL CREEK 345KV CKT 1
FDNS	09ALL	0	15G	G15_008	TO->FROM	ALBION - PETERSBURG 115KV CKT 1	137	137	0.22199	100.8739	GEN640010 1-GERALD GENTLEMAN STATION UNIT 1
FDNS	09ALL	0	15G	G15_008	TO->FROM	BATTLE CREEK - COUNTY LINE 115KV CKT 1	240	240	0.51665	121.2525	BLOOMFIELD - GAVINS POINT 115KV CKT 1
FDNS	09ALL	0	15G	G15_008	TO->FROM	BATTLE CREEK - COUNTY LINE 115KV CKT 1	240	240	0.52896	117.6390	PETERSBRG.N7115.00 - PETERSBURG 115KV CKT Z1
FDNS	09ALL	0	15G	G15_008	TO->FROM	BATTLE CREEK - COUNTY LINE 115KV CKT 1	240	240	0.52896	117.4399	ALBION - PETERSBURG 115KV CKT 1
FDNS	09ALL	0	15WP	G15_008	TO->FROM	BATTLE CREEK - COUNTY LINE 115KV CKT 1	240	240	0.51667	116.0269	BLOOMFIELD - GAVINS POINT 115KV CKT 1
FDNS	09ALL	0	15WP	G15_008	TO->FROM	BATTLE CREEK - COUNTY LINE 115KV CKT 1	240	240	0.52892	115.0970	PETERSBRG.N7115.00 - PETERSBURG 115KV CKT Z1
FDNS	09ALL	0	15WP	G15_008	TO->FROM	BATTLE CREEK - COUNTY LINE 115KV CKT 1	240	240	0.52892	114.6936	ALBION - PETERSBURG 115KV CKT 1
FDNS	09NR	0	15G	G15_008	TO->FROM	BATTLE CREEK - COUNTY LINE 115KV CKT 1	240	240	0.51056	104.1686	BLOOMFIELD - GAVINS POINT 115KV CKT 1
FDNS	09ALL	0	15G	G15_008	TO->FROM	BATTLE CREEK - COUNTY LINE 115KV CKT 1	240	240	0.47829	102.8157	WAPA-OG-2
FDNS	09ALL	0	15G	G15_008	TO->FROM	BATTLE CREEK - COUNTY LINE 115KV CKT 1	240	240	0.46337	101.2206	ALBION - GENOA 115KV CKT 1
FDNS	09ALL	0	15G	G15_008	TO->FROM	BATTLE CREEK - COUNTY LINE 115KV CKT 1	240	240	0.51665	101.1371	CREIGHTON - NELIGH.EAST7115.00 115KV CKT 1
FDNS	09NR	0	15G	G15_008	TO->FROM	BATTLE CREEK - COUNTY LINE 115KV CKT 1	240	240	0.52762	100.9822	PETERSBRG.N7115.00 - PETERSBURG 115KV CKT Z1
FDNS	09NR	0	15G	G15_008	TO->FROM	BATTLE CREEK - COUNTY LINE 115KV CKT 1	240	240	0.52762	100.7887	ALBION - PETERSBURG 115KV CKT 1
FDNS	09ALL	0	15G	G15_008	TO->FROM	BATTLE CREEK - COUNTY LINE 115KV CKT 1	240	240	0.46337	99.9000	COLUMBUS - GENOA 115KV CKT 1
FDNS	09ALL	0	15G	G15_008	TO->FROM	BATTLE CREEK - COUNTY LINE 115KV CKT 1	240	240	0.46387	99.7000	WAPA-OG-1
FDNS	09ALL	0	15G	G15_008	FROM->TO	BATTLE CREEK - NORTH NORFOLK 115KV CKT 1	193	193	0.51665	147.0794	BLOOMFIELD - GAVINS POINT 115KV CKT 1
FDNS	09ALL	0	15G	G15_008	FROM->TO	BATTLE CREEK - NORTH NORFOLK 115KV CKT 1	193	193	0.52896	142.5931	PETERSBRG.N7115.00 - PETERSBURG 115KV CKT Z1
FDNS	09ALL	0	15G	G15_008	FROM->TO	BATTLE CREEK - NORTH NORFOLK 115KV CKT 1	193	193	0.52896	142.3460	ALBION - PETERSBURG 115KV CKT 1
FDNS	09ALL	0	15WP	G15_008	FROM->TO	BATTLE CREEK - NORTH NORFOLK 115KV CKT 1	193	193	0.51667	135.4167	BLOOMFIELD - GAVINS POINT 115KV CKT 1
FDNS	09ALL	0	15WP	G15_008	FROM->TO	BATTLE CREEK - NORTH NORFOLK 115KV CKT 1	193	193	0.52892	134.3161	PETERSBRG.N7115.00 - PETERSBURG 115KV CKT Z1
FDNS	09ALL	0	15WP	G15_008	FROM->TO	BATTLE CREEK - NORTH NORFOLK 115KV CKT 1	193	193	0.52892	133.8170	ALBION - PETERSBURG 115KV CKT 1
FDNS	09NR	0	15G	G15_008	FROM->TO	BATTLE CREEK - NORTH NORFOLK 115KV CKT 1	193	193	0.51056	125.8622	BLOOMFIELD - GAVINS POINT 115KV CKT 1
FDNS	09ALL	0	15G	G15_008	FROM->TO	BATTLE CREEK - NORTH NORFOLK 115KV CKT 1	193	193	0.47829	124.1839	WAPA-OG-2
FDNS	09ALL	0	15G	G15_008	FROM->TO	BATTLE CREEK - NORTH NORFOLK 115KV CKT 1	193	193	0.46337	122.1857	ALBION - GENOA 115KV CKT 1
FDNS	09ALL	0	15G	G15_008	FROM->TO	BATTLE CREEK - NORTH NORFOLK 115KV CKT 1	193	193	0.51665	122.0817	CREIGHTON - NELIGH.EAST7115.00 115KV CKT 1
FDNS	09NR	0	15G	G15_008	FROM->TO	BATTLE CREEK - NORTH NORFOLK 115KV CKT 1	193	193	0.52762	121.9069	PETERSBRG.N7115.00 - PETERSBURG 115KV CKT Z1
FDNS	09NR	0	15G	G15_008	FROM->TO	BATTLE CREEK - NORTH NORFOLK 115KV CKT 1	193	193	0.52762	121.6667	ALBION - PETERSBURG 115KV CKT 1
FDNS	09ALL	0	15G	G15_008	FROM->TO	BATTLE CREEK - NORTH NORFOLK 115KV CKT 1	193	193	0.46337	120.5700	COLUMBUS - GENOA 115KV CKT 1
FDNS	09ALL	0	15G	G15_008	FROM->TO	BATTLE CREEK - NORTH NORFOLK 115KV CKT 1	193	193	0.46387	120.3509	WAPA-OG-1
FDNS	09ALL	0	15G	G15_008	FROM->TO	BATTLE CREEK - NORTH NORFOLK 115KV CKT 1	193	193	0.51665	117.5003	BLOOMFIELD - CREIGHTON 115KV CKT 1
FDNS	09ALL	0	15G	G15_008	FROM->TO	BATTLE CREEK - NORTH NORFOLK 115KV CKT 1	193	193	0.49035	115.2128	LN-1164
FDNS	09ALL	0	15G	G15_008	FROM->TO	BATTLE CREEK - NORTH NORFOLK 115KV CKT 1	193	193	0.49035	115.1983	CLEARWATER - NELIGH 115KV CKT 1
FDNS	09ALL	0	15G	G15_008	FROM->TO	BATTLE CREEK - NORTH NORFOLK 115KV CKT 1	193	193	0.49035	114.7418	CLEARWATER - ONEILL 115KV CKT 1
FDNS	09ALL	0	15WP	G15_008	FROM->TO	BATTLE CREEK - NORTH NORFOLK 115KV CKT 1	193	193	0.51667	113.3626	CREIGHTON - NELIGH.EAST7115.00 115KV CKT 1

SOLUTION	GROUP	SCENARIO	SEASON	SOURCE	DIRECTION	MONITORED ELEMENT	RATEA (MVA)	RATEB(MVA)	TDF	TC%LOADING (% MVA)	CONTINGENCY
FDNS	09ALL	0	15WP	G15_008	FROM->TO	BATTLE CREEK - NORTH NORFOLK 115KV CKT 1	193	193	0.46334	111.8687	ALBION - GENOA 115KV CKT 1
FDNS	09ALL	0	15G	G15_008	FROM->TO	BATTLE CREEK - NORTH NORFOLK 115KV CKT 1	193	193	0.45101	110.8638	LN-WAPA6
FDNS	09ALL	0	15G	G15_008	FROM->TO	BATTLE CREEK - NORTH NORFOLK 115KV CKT 1	193	193	0.45101	110.8638	NEB001NPPB2
FDNS	09ALL	0	15G	G15_008	FROM->TO	BATTLE CREEK - NORTH NORFOLK 115KV CKT 1	193	193	0.45101	110.8406	ONEILL - SPENCER 115KV CKT 1
FDNS	09ALL	0	15G	G15_008	FROM->TO	BATTLE CREEK - NORTH NORFOLK 115KV CKT 1	193	193	0.52896	110.4489	NELIGH - PETERSBRG.N7115.00 115KV CKT 1
FDNS	09ALL	0	15G	G15_008	FROM->TO	BATTLE CREEK - NORTH NORFOLK 115KV CKT 1	193	193	0.45101	110.4095	FT RANDAL - SPENCER 115KV CKT 1
FDNS	09ALL	0	15G	G15_008	FROM->TO	BATTLE CREEK - NORTH NORFOLK 115KV CKT 1	193	193	0.42223	109.7826	GAVINS POINT - HARTINGTON 115KV CKT 1
FDNS	09ALL	0	15G	G15_008	FROM->TO	BATTLE CREEK - NORTH NORFOLK 115KV CKT 1	193	193	0.41585	109.4695	KELLY - MEADOWGROVE4230.00 230KV CKT 1
FDNS	09ALL	0	15G	G15_008	FROM->TO	BATTLE CREEK - NORTH NORFOLK 115KV CKT 1	193	193	0.42223	109.2164	NEB02WAPAB2
FDNS	09ALL	0	15G	G15_008	FROM->TO	BATTLE CREEK - NORTH NORFOLK 115KV CKT 1	193	193	0.42827	109.1691	GAVINS POINT - YANKON JCT 115KV CKT 1
FDNS	09ALL	0	15G	G15_008	FROM->TO	BATTLE CREEK - NORTH NORFOLK 115KV CKT 1	193	193	0.42137	108.4612	DAK02WAPAB2
FDNS	09ALL	0	15WP	G15_008	FROM->TO	BATTLE CREEK - NORTH NORFOLK 115KV CKT 1	193	193	0.46334	108.3349	COLUMBUS - GENOA 115KV CKT 1
FDNS	09ALL	0	15WP	G15_008	FROM->TO	BATTLE CREEK - NORTH NORFOLK 115KV CKT 1	193	193	0.46383	108.2491	WAPA-OG-1
FDNS	09ALL	0	15G	G15_008	FROM->TO	BATTLE CREEK - NORTH NORFOLK 115KV CKT 1	193	193	0.42426	107.9042	UTICA - YANKON JCT 115KV CKT 1
FDNS	09ALL	0	15G	G15_008	FROM->TO	BATTLE CREEK - NORTH NORFOLK 115KV CKT 1	193	193	0.42223	107.8994	BELDEN - HARTINGTON 115KV CKT 1
FDNS	09ALL	0	15WP	G15_008	FROM->TO	BATTLE CREEK - NORTH NORFOLK 115KV CKT 1	193	193	0.47826	107.8480	WAPA-OG-2
FDNS	09ALL	0	15G	G15_008	FROM->TO	BATTLE CREEK - NORTH NORFOLK 115KV CKT 1	193	193	0.4181	107.5977	GAVINS POINT - SPIRIT MOUND 115KV CKT 1
FDNS	09ALL	0	15G	G15_008	FROM->TO	BATTLE CREEK - NORTH NORFOLK 115KV CKT 1	193	193	0.41524	107.1029	GEN560350 1-G10-51 0.6900
FDNS	09ALL	0	15WP	G15_008	FROM->TO	BATTLE CREEK - NORTH NORFOLK 115KV CKT 1	193	193	0.49035	107.0917	LN-1164
FDNS	09ALL	0	15WP	G15_008	FROM->TO	BATTLE CREEK - NORTH NORFOLK 115KV CKT 1	193	193	0.49035	107.0729	CLEARWATER - NELIGH 115KV CKT 1
FDNS	09ALL	0	15G	G15_008	FROM->TO	BATTLE CREEK - NORTH NORFOLK 115KV CKT 1	193	193	0.41567	107.0244	GRAND ISLAND - MCCOOL 345KV CKT 1
FDNS	09ALL	0	15G	G15_008	FROM->TO	BATTLE CREEK - NORTH NORFOLK 115KV CKT 1	193	193	0.41524	106.9029	GEN635213 3-NEAL UNIT 3
FDNS	09ALL	0	15G	G15_008	FROM->TO	BATTLE CREEK - NORTH NORFOLK 115KV CKT 1	193	193	0.41524	106.8714	GEN562673 1-G15_007_3 0.6900
FDNS	09NR	0	15G	G15_008	FROM->TO	BATTLE CREEK - NORTH NORFOLK 115KV CKT 1	193	193	0.51056	106.8440	CREIGHTON - NELIGH.EAST7115.00 115KV CKT 1
FDNS	09ALL	0	15SP	G15_008	FROM->TO	BATTLE CREEK - NORTH NORFOLK 115KV CKT 1	193	193	0.52891	106.7737	PETERSBRG.N7115.00 - PETERSBURG 115KV CKT Z1
FDNS	09ALL	0	15G	G15_008	FROM->TO	BATTLE CREEK - NORTH NORFOLK 115KV CKT 1	193	193	0.41569	106.7707	MCCOOL - MOORE 345KV CKT 1
FDNS	09ALL	0	15G	G15_008	FROM->TO	BATTLE CREEK - NORTH NORFOLK 115KV CKT 1	193	193	0.41617	106.6576	FT RANDAL - SIOUX CITY 230KV CKT 1
FDNS	09ALL	0	15G	G15_008	FROM->TO	BATTLE CREEK - NORTH NORFOLK 115KV CKT 1	193	193	0.4181	106.6566	MANNING - SPIRIT MOUND 115KV CKT 1
FDNS	09ALL	0	15WP	G15_008	FROM->TO	BATTLE CREEK - NORTH NORFOLK 115KV CKT 1	193	193	0.51667	106.5995	BLOOMFIELD - CREIGHTON 115KV CKT 1
FDNS	09ALL	0	15WP	G15_008	FROM->TO	BATTLE CREEK - NORTH NORFOLK 115KV CKT 1	193	193	0.49035	106.5073	CLEARWATER - ONEILL 115KV CKT 1
FDNS	09ALL	0	15G	G15_008	FROM->TO	BATTLE CREEK - NORTH NORFOLK 115KV CKT 1	193	193	0.41994	106.4862	LOUP CITY - ST LIBORY 115KV CKT 1
FDNS	09ALL	0	15G	G15_008	FROM->TO	BATTLE CREEK - NORTH NORFOLK 115KV CKT 1	193	193	0.41524	106.4673	GEN635214 4-NEAL UNIT 4
FDNS	09NR	0	15G	G15_008	FROM->TO	BATTLE CREEK - NORTH NORFOLK 115KV CKT 1	193	193	0.47236	106.3504	WAPA-OG-2
FDNS	09ALL	0	15G	G15_008	FROM->TO	BATTLE CREEK - NORTH NORFOLK 115KV CKT 1	193	193	0.4327	106.3125	ALBION - SPALDING 115KV CKT 1
FDNS	09ALL	0	15G	G15_008	FROM->TO	BATTLE CREEK - NORTH NORFOLK 115KV CKT 1	193	193	0.41536	106.3001	KELLY - SHELL CREEK 230KV CKT 1
FDNS	09ALL	0	15G	G15_008	FROM->TO	BATTLE CREEK - NORTH NORFOLK 115KV CKT 1	193	193	0.41536	106.3001	SHELL CREEK (SHELLCREEKT1) 345/230/13.8KV TRANSFORMER CKT 1
FDNS	09ALL	0	15G	G15_008	FROM->TO	BATTLE CREEK - NORTH NORFOLK 115KV CKT 1	193	193	0.41327	106.2515	DIXONCO 230.00 - HOSKINS 230KV CKT 1
FDNSLock	09ALL	0	15G	G15_008	FROM->TO	BATTLE CREEK - NORTH NORFOLK 115KV CKT 1	193	193	0.41632	106.1970	MINGO - RED WILLOW 345KV CKT 1
FDNS	09ALL	0	15G	G15_008	FROM->TO	BATTLE CREEK - NORTH NORFOLK 115KV CKT 1	193	193	0.4181	106.1103	BERSFORD - MANNING 115KV CKT 1
FDNS	09ALL	0	15G	G15_008	FROM->TO	BATTLE CREEK - NORTH NORFOLK 115KV CKT 1	193	193	0.43441	106.0962	NELIGH - NELIGH.EAST7115.00 115KV CKT 2
FDNS	09ALL	0	15G	G15_008	FROM->TO	BATTLE CREEK - NORTH NORFOLK 115KV CKT 1	193	193	0.41766	106.0703	AINSWORTH - VALENTINE 115KV CKT 1
FDNS	09ALL	0	15G	G15_008	FROM->TO	BATTLE CREEK - NORTH NORFOLK 115KV CKT 1	193	193	0.41524	106.0090	GEN562003 1-G11_027_3 0.6900
FDNS	09ALL	0	15SP	G15_008	FROM->TO	BATTLE CREEK - NORTH NORFOLK 115KV CKT 1	193	193	0.52891	105.2732	ALBION - PETERSBURG 115KV CKT 1
FDNS	09NR	0	15G	G15_008	FROM->TO	BATTLE CREEK - NORTH NORFOLK 115KV CKT 1	193	193	0.45798	105.1060	ALBION - GENOA 115KV CKT 1
FDNS	09ALL	0	15G	G15_008	FROM->TO	BATTLE CREEK - NORTH NORFOLK 115KV CKT 1	193	193	0.41524	104.2732	BASE CASE
FDNS	09ALL	0	15G	G15_008	FROM->TO	BATTLE CREEK - NORTH NORFOLK 115KV CKT 1	193	193	0.41524	103.9644	NUCOR-1
FDNS	09NR	0	15G	G15_008	FROM->TO	BATTLE CREEK - NORTH NORFOLK 115KV CKT 1	193	193	0.45798	103.5462	COLUMBUS - GENOA 115KV CKT 1
FDNS	09ALL	0	15G	G15_008	FROM->TO	BATTLE CREEK - NORTH NORFOLK 115KV CKT 1	193	193	0.41524	103.4965	NUCOR-2
FDNS	09NR	0	15G	G15_008	FROM->TO	BATTLE CREEK - NORTH NORFOLK 115KV CKT 1	193	193	0.45849	103.2626	WAPA-OG-1
FDNS	09ALL	0	15WP	G15_008	FROM->TO	BATTLE CREEK - NORTH NORFOLK 115KV CKT 1	193	193	0.52892	103.0213	NELIGH - PETERSBRG.N7115.00 115KV CKT 1
FDNS	09ALL	0	15G	G15_008	FROM->TO	BATTLE CREEK - NORTH NORFOLK 115KV CKT 1	193	193	0.41186	102.7005	COLUMEAST - NW68TH & HOLDREGE 345KV CKT 1
FDNSLock	09ALL	0	15G	G15_008	FROM->TO	BATTLE CREEK - NORTH NORFOLK 115KV CKT 1	193	193	0.41524	102.5816	GEN659103 1-ANTELOPE VALLEY UNIT1
FDNSLock	09ALL	0	15G	G15_008	FROM->TO	BATTLE CREEK - NORTH NORFOLK 115KV CKT 1	193	193	0.41524	102.5816	GEN659107 2-ANTELOPE VALLEY UNIT2
FDNS	09ALL	0	15G	G15_008	FROM->TO	BATTLE CREEK - NORTH NORFOLK 115KV CKT 1	193	193	0.42557	102.5317	LN-1267
FDNS	09ALL	0	15G	G15_008	FROM->TO	BATTLE CREEK - NORTH NORFOLK 115KV CKT 1	193	193	0.41279	102.5277	HOSKINS - STANTON NORTH 115KV CKT 1
FDNS	09ALL	0	15G	G15_008	FROM->TO	BATTLE CREEK - NORTH NORFOLK 115KV CKT 1	193	193	0.41496	102.5273	LAKEFIELD 3 - RAUN 345KV CKT 1
FDNS	09ALL	0	15G	G15_008	FROM->TO	BATTLE CREEK - NORTH NORFOLK 115KV CKT 1	193	193	0.42557	102.5121	EMMET - ONEILL 115KV CKT 1
FDNS	09ALL	0	15G	G15_008	FROM->TO	BATTLE CREEK - NORTH NORFOLK 115KV CKT 1	193	193	0.41576	102.5022	FT THOMPSON - FTTHOM2-LNX3345.00 345KV CKT Z
FDNS	09ALL	0	15G	G15_008	FROM->TO	BATTLE CREEK - NORTH NORFOLK 115KV CKT 1	193	193	0.41576	102.4681	GRPRAR2-LNX3345.00 - YANKTON 345KV CKT Z
FDNS	09ALL	0	15G	G15_008	FROM->TO	BATTLE CREEK - NORTH NORFOLK 115KV CKT 1	193	193	0.41576	102.4645	FTTHOM2-LNX3345.00 - GRPRAR2-LNX3345.00 345KV CKT 1
FDNS	09ALL	0	15G	G15_008	FROM->TO	BATTLE CREEK - NORTH NORFOLK 115KV CKT 1	193	193	0.42557	102.4378	ATKINSON - EMMET 115KV CKT 1
FDNS	09ALL	0	15G	G15_008	FROM->TO	BATTLE CREEK - NORTH NORFOLK 115KV CKT 1	193	193	0.41592	102.3115	RAUN - SIOUX CITY 345KV CKT 1
FDNS	09NR	0	15G	G15_008	FROM->TO	BATTLE CREEK - NORTH NORFOLK 115KV CKT 1	193	193	0.51056	102.2891	BLOOMFIELD - CREIGHTON 115KV CKT 1
FDNS	09ALL	0	15WP	G15_008	FROM->TO	BATTLE CREEK - NORTH NORFOLK 115KV CKT 1	193	193	0.42221	102.2584	GAVINS POINT - HARTINGTON 115KV CKT 1
FDNS	09ALL	0	15G	G15_008	FROM->TO	BATTLE CREEK - NORTH NORFOLK 115KV CKT 1	193	193	0.42557	102.2531	ATKINSON - STUART 115KV CKT 1
FDNS	09ALL	0	15G	G15_008	FROM->TO	BATTLE CREEK - NORTH NORFOLK 115KV CKT 1	193	193	0.42557	102.1707	AINSWORTH - STUART 115KV CKT 1
FDNS	09ALL	0	15G	G15_008	FROM->TO	BATTLE CREEK - NORTH NORFOLK 115KV CKT 1	193	193	0.41174	102.0705	COLUMEAST - SHELL CREEK 345KV CKT 1
FDNS	09ALL	0	15G	G15_008	FROM->TO	BATTLE CREEK - NORTH NORFOLK 115KV CKT 1	193	193	0.41765	101.9689	BROKEN BOW - LOUP CITY 115KV CKT 1
FDNS	09ALL	0	15WP	G15_008	FROM->TO	BATTLE CREEK - NORTH NORFOLK 115KV CKT 1	193	193	0.42827	101.9149	GAVINS POINT - YANKON JCT 115KV CKT 1
FDNS	09ALL	0	15G	G15_008	FROM->TO	BATTLE CREEK - NORTH NORFOLK 115KV CKT 1	193	193	0.4068	101.8541	NORFOLK - NORTH NORFOLK 115KV CKT 1
FDNS	09ALL	0	15G	G15_008	FROM->TO	BATTLE CREEK - NORTH NORFOLK 115KV CKT 1	193	193	0.41524	101.8401	GEN659118 1-LARAMIE RIVER UNIT1
FDNS	09ALL	0	15G	G15_008	FROM->TO	BATTLE CREEK - NORTH NORFOLK 115KV CKT 1	193	193	0.41524	101.6732	GEN640026 1-AINSWORTH WIND
FDNS	09ALL	0	15G	G15_008	FROM->TO	BATTLE CREEK - NORTH NORFOLK 115KV CKT 1	193	193	0.41585	101.5661	FT RANDAL - G14_023T 230.00 230KV CKT 1
FDNS	09ALL	0	15WP	G15_008	FROM->TO	BATTLE CREEK - NORTH NORFOLK 115KV CKT 1	193	193	0.41583	101.5124	KELLY - MEADOWGROVE4230.00 230KV CKT 1
FDNS	09ALL	0	15WP	G15_008	FROM->TO	BATTLE CREEK - NORTH NORFOLK 115KV CKT 1	193	193	0.42221	101.3861	NEB02WAPAB2

SOLUTION	GROUP	SCENARIO	SEASON	SOURCE	DIRECTION	MONITORED ELEMENT	RATEA (MVA)	RATEB(MVA)	TDF	TC%LOADING (% MVA)	CONTINGENCY
FDNS	09ALL	0	15G	G15_008	FROM->TO	BATTLE CREEK - NORTH NORFOLK 115KV CKT 1	193	193	0.41239	101.3757	SIOUX CITY - TWIN CHURCH 230KV CKT 1
FDNS	09ALL	0	15G	G15_008	FROM->TO	BATTLE CREEK - NORTH NORFOLK 115KV CKT 1	193	193	0.41524	100.7210	GEN640421 1-CROFTON HILLS WIND
FDNS	09ALL	0	15WP	G15_008	FROM->TO	BATTLE CREEK - NORTH NORFOLK 115KV CKT 1	193	193	0.45102	100.0000	LN-WAPA6
FDNS	09ALL	0	15WP	G15_008	FROM->TO	BATTLE CREEK - NORTH NORFOLK 115KV CKT 1	193	193	0.45102	100.0000	NEB001NPPB2
FDNS	09ALL	0	15WP	G15_008	FROM->TO	BATTLE CREEK - NORTH NORFOLK 115KV CKT 1	193	193	0.45102	99.9000	ONEILL - SPENCER 115KV CKT 1
FDNS	09ALL	0	15WP	G15_008	FROM->TO	BATTLE CREEK - NORTH NORFOLK 115KV CKT 1	193	193	0.42137	99.9000	DAK02WAPAB2
FDNS	09ALL	0	15G	G15_008	FROM->TO	BLOOMFIELD - GAVINS POINT 115KV CKT 1	120	120	0.33804	188.3584	COUNTY LINE - NELIGH.EAST7115.00 115KV CKT 1
FDNS	09ALL	0	15G	G15_008	FROM->TO	BLOOMFIELD - GAVINS POINT 115KV CKT 1	120	120	0.33804	188.2872	LN-1163-2
FDNS	09ALL	0	15G	G15_008	FROM->TO	BLOOMFIELD - GAVINS POINT 115KV CKT 1	120	120	0.33804	188.0904	BATTLE CREEK - COUNTY LINE 115KV CKT 1
FDNS	09ALL	0	15G	G15_008	FROM->TO	BLOOMFIELD - GAVINS POINT 115KV CKT 1	120	120	0.33804	185.7592	BATTLE CREEK - NORTH NORFOLK 115KV CKT 1
FDNS	09ALL	0	15WP	G15_008	FROM->TO	BLOOMFIELD - GAVINS POINT 115KV CKT 1	120	120	0.3381	173.9791	COUNTY LINE - NELIGH.EAST7115.00 115KV CKT 1
FDNS	09ALL	0	15WP	G15_008	FROM->TO	BLOOMFIELD - GAVINS POINT 115KV CKT 1	120	120	0.3381	173.8140	LN-1163-2
FDNS	09ALL	0	15WP	G15_008	FROM->TO	BLOOMFIELD - GAVINS POINT 115KV CKT 1	120	120	0.3381	173.7954	BATTLE CREEK - COUNTY LINE 115KV CKT 1
FDNS	09ALL	0	15WP	G15_008	FROM->TO	BLOOMFIELD - GAVINS POINT 115KV CKT 1	120	120	0.3381	168.7264	BATTLE CREEK - NORTH NORFOLK 115KV CKT 1
FDNS	09NR	0	15G	G15_008	FROM->TO	BLOOMFIELD - GAVINS POINT 115KV CKT 1	120	120	0.33334	156.0641	COUNTY LINE - NELIGH.EAST7115.00 115KV CKT 1
FDNS	09NR	0	15G	G15_008	FROM->TO	BLOOMFIELD - GAVINS POINT 115KV CKT 1	120	120	0.33334	155.9970	LN-1163-2
FDNS	09NR	0	15G	G15_008	FROM->TO	BLOOMFIELD - GAVINS POINT 115KV CKT 1	120	120	0.33334	155.8547	BATTLE CREEK - COUNTY LINE 115KV CKT 1
FDNS	09ALL	0	15G	G15_008	FROM->TO	BLOOMFIELD - GAVINS POINT 115KV CKT 1	120	120	0.24457	154.5846	PETERSBRG.N7115.00 - PETERSBURG 115KV CKT Z1
FDNS	09ALL	0	15G	G15_008	FROM->TO	BLOOMFIELD - GAVINS POINT 115KV CKT 1	120	120	0.24457	154.4058	ALBION - PETERSBURG 115KV CKT 1
FDNS	09NR	0	15G	G15_008	FROM->TO	BLOOMFIELD - GAVINS POINT 115KV CKT 1	120	120	0.33334	153.7979	BATTLE CREEK - NORTH NORFOLK 115KV CKT 1
FDNS	09ALL	0	15WP	G15_008	FROM->TO	BLOOMFIELD - GAVINS POINT 115KV CKT 1	120	120	0.24463	143.8001	PETERSBRG.N7115.00 - PETERSBURG 115KV CKT Z1
FDNS	09ALL	0	15WP	G15_008	FROM->TO	BLOOMFIELD - GAVINS POINT 115KV CKT 1	120	120	0.24463	143.4418	ALBION - PETERSBURG 115KV CKT 1
FDNS	09ALL	0	15G	G15_008	FROM->TO	BLOOMFIELD - GAVINS POINT 115KV CKT 1	120	120	0.21467	139.7403	ALBION - GENOA 115KV CKT 1
FDNS	09ALL	0	15G	G15_008	FROM->TO	BLOOMFIELD - GAVINS POINT 115KV CKT 1	120	120	0.21675	139.3865	WAPA-OG-2
FDNS	09ALL	0	15G	G15_008	FROM->TO	BLOOMFIELD - GAVINS POINT 115KV CKT 1	120	120	0.2145	138.7428	WAPA-OG-1
FDNS	09ALL	0	15G	G15_008	FROM->TO	BLOOMFIELD - GAVINS POINT 115KV CKT 1	120	120	0.21467	138.6095	COLUMBUS - GENOA 115KV CKT 1
FDNS	09ALL	0	15G	G15_008	FROM->TO	BLOOMFIELD - GAVINS POINT 115KV CKT 1	120	120	0.23529	136.8875	CLEARWATER - NELIGH 115KV CKT 1
FDNS	09ALL	0	15G	G15_008	FROM->TO	BLOOMFIELD - GAVINS POINT 115KV CKT 1	120	120	0.23529	136.8515	LN-1164
FDNS	09ALL	0	15G	G15_008	FROM->TO	BLOOMFIELD - GAVINS POINT 115KV CKT 1	120	120	0.23529	136.4922	CLEARWATER - ONEILL 115KV CKT 1
FDNS	09ALL	0	15G	G15_008	FROM->TO	BLOOMFIELD - GAVINS POINT 115KV CKT 1	120	120	0.21544	133.5292	ONEILL - SPENCER 115KV CKT 1
FDNS	09ALL	0	15G	G15_008	FROM->TO	BLOOMFIELD - GAVINS POINT 115KV CKT 1	120	120	0.21544	133.4670	LN-WAPA6
FDNS	09ALL	0	15G	G15_008	FROM->TO	BLOOMFIELD - GAVINS POINT 115KV CKT 1	120	120	0.21544	133.4670	NEB001NPPB2
FDNS	09ALL	0	15G	G15_008	FROM->TO	BLOOMFIELD - GAVINS POINT 115KV CKT 1	120	120	0.21544	133.1334	FT RANDAL - SPENCER 115KV CKT 1
FDNS	09ALL	0	15G	G15_008	FROM->TO	BLOOMFIELD - GAVINS POINT 115KV CKT 1	120	120	0.24457	131.8975	NELIGH - PETERSBRG.N7115.00 115KV CKT 1
FDNS	09ALL	0	15G	G15_008	FROM->TO	BLOOMFIELD - GAVINS POINT 115KV CKT 1	120	120	0.20637	131.2938	HOSKINS - NORTH NORFOLK 115KV CKT 1
FDNS	09ALL	0	15WP	G15_008	FROM->TO	BLOOMFIELD - GAVINS POINT 115KV CKT 1	120	120	0.21472	128.5990	ALBION - GENOA 115KV CKT 1
FDNS	09ALL	0	15G	G15_008	FROM->TO	BLOOMFIELD - GAVINS POINT 115KV CKT 1	120	120	0.19439	127.8131	BASE CASE
FDNS	09ALL	0	15WP	G15_008	FROM->TO	BLOOMFIELD - GAVINS POINT 115KV CKT 1	120	120	0.23535	127.4883	CLEARWATER - NELIGH 115KV CKT 1
FDNS	09ALL	0	15WP	G15_008	FROM->TO	BLOOMFIELD - GAVINS POINT 115KV CKT 1	120	120	0.23535	127.4383	LN-1164
FDNS	09ALL	0	15WP	G15_008	FROM->TO	BLOOMFIELD - GAVINS POINT 115KV CKT 1	120	120	0.23535	127.0312	CLEARWATER - ONEILL 115KV CKT 1
FDNS	09NR	0	15G	G15_008	FROM->TO	BLOOMFIELD - GAVINS POINT 115KV CKT 1	120	120	0.24278	126.6531	PETERSBRG.N7115.00 - PETERSBURG 115KV CKT Z1
FDNS	09NR	0	15G	G15_008	FROM->TO	BLOOMFIELD - GAVINS POINT 115KV CKT 1	120	120	0.24278	126.4848	ALBION - PETERSBURG 115KV CKT 1
FDNS	09ALL	0	15WP	G15_008	FROM->TO	BLOOMFIELD - GAVINS POINT 115KV CKT 1	120	120	0.21456	126.4292	WAPA-OG-1
FDNS	09ALL	0	15WP	G15_008	FROM->TO	BLOOMFIELD - GAVINS POINT 115KV CKT 1	120	120	0.21472	126.3803	COLUMBUS - GENOA 115KV CKT 1
FDNS	09ALL	0	15WP	G15_008	FROM->TO	BLOOMFIELD - GAVINS POINT 115KV CKT 1	120	120	0.21681	126.2910	WAPA-OG-2
FDNS	09ALL	0	15SP	G15_008	FROM->TO	BLOOMFIELD - GAVINS POINT 115KV CKT 1	120	120	0.33801	124.7388	COUNTY LINE - NELIGH.EAST7115.00 115KV CKT 1
FDNS	09ALL	0	15SP	G15_008	FROM->TO	BLOOMFIELD - GAVINS POINT 115KV CKT 1	120	120	0.33801	124.3725	LN-1163-2
FDNS	09ALL	0	15WP	G15_008	FROM->TO	BLOOMFIELD - GAVINS POINT 115KV CKT 1	120	120	0.24463	123.1594	NELIGH - PETERSBRG.N7115.00 115KV CKT 1
FDNS	09ALL	0	15SP	G15_008	FROM->TO	BLOOMFIELD - GAVINS POINT 115KV CKT 1	120	120	0.33801	122.7938	BATTLE CREEK - COUNTY LINE 115KV CKT 1
FDNS	09ALL	0	15WP	G15_008	FROM->TO	BLOOMFIELD - GAVINS POINT 115KV CKT 1	120	120	0.21551	122.0913	ONEILL - SPENCER 115KV CKT 1
FDNS	09ALL	0	15WP	G15_008	FROM->TO	BLOOMFIELD - GAVINS POINT 115KV CKT 1	120	120	0.21551	121.9218	LN-WAPA6
FDNS	09ALL	0	15WP	G15_008	FROM->TO	BLOOMFIELD - GAVINS POINT 115KV CKT 1	120	120	0.21551	121.9218	NEB001NPPB2
FDNS	09ALL	0	15WP	G15_008	FROM->TO	BLOOMFIELD - GAVINS POINT 115KV CKT 1	120	120	0.20643	121.3661	HOSKINS - NORTH NORFOLK 115KV CKT 1
FDNS	09ALL	0	15WP	G15_008	FROM->TO	BLOOMFIELD - GAVINS POINT 115KV CKT 1	120	120	0.19445	118.7402	BASE CASE
FDNS	09NR	0	15G	G15_008	FROM->TO	BLOOMFIELD - GAVINS POINT 115KV CKT 1	120	120	0.2111	115.2026	ALBION - GENOA 115KV CKT 1
FDNS	09NR	0	15G	G15_008	FROM->TO	BLOOMFIELD - GAVINS POINT 115KV CKT 1	120	120	0.21312	114.7526	WAPA-OG-2
FDNS	09NR	0	15G	G15_008	FROM->TO	BLOOMFIELD - GAVINS POINT 115KV CKT 1	120	120	0.21093	114.3760	WAPA-OG-1
FDNS	09NR	0	15G	G15_008	FROM->TO	BLOOMFIELD - GAVINS POINT 115KV CKT 1	120	120	0.2111	114.2308	COLUMBUS - GENOA 115KV CKT 1
FDNS	09ALL	0	15SP	G15_008	FROM->TO	BLOOMFIELD - GAVINS POINT 115KV CKT 1	120	120	0.33801	113.2793	BATTLE CREEK - NORTH NORFOLK 115KV CKT 1
FDNS	09NR	0	15G	G15_008	FROM->TO	BLOOMFIELD - GAVINS POINT 115KV CKT 1	120	120	0.23251	112.9644	CLEARWATER - NELIGH 115KV CKT 1
FDNS	09NR	0	15G	G15_008	FROM->TO	BLOOMFIELD - GAVINS POINT 115KV CKT 1	120	120	0.23251	112.9217	LN-1164
FDNS	09NR	0	15G	G15_008	FROM->TO	BLOOMFIELD - GAVINS POINT 115KV CKT 1	120	120	0.23251	112.6119	CLEARWATER - ONEILL 115KV CKT 1
FDNS	09NR	0	15G	G15_008	FROM->TO	BLOOMFIELD - GAVINS POINT 115KV CKT 1	120	120	0.19104	111.1409	FT RANDAL - UTICA JCT 230KV CKT 1
FDNS	09NR	0	15G	G15_008	FROM->TO	BLOOMFIELD - GAVINS POINT 115KV CKT 1	120	120	0.2114	110.1921	ONEILL - SPENCER 115KV CKT 1
FDNS	09NR	0	15G	G15_008	FROM->TO	BLOOMFIELD - GAVINS POINT 115KV CKT 1	120	120	0.19211	110.1353	DIXONCO 230.00 - TWIN CHURCH 230KV CKT 1
FDNS	09NR	0	15G	G15_008	FROM->TO	BLOOMFIELD - GAVINS POINT 115KV CKT 1	120	120	0.2114	110.1349	LN-WAPA6
FDNS	09NR	0	15G	G15_008	FROM->TO	BLOOMFIELD - GAVINS POINT 115KV CKT 1	120	120	0.2114	110.1349	NEB001NPPB2
FDNS	09NR	0	15G	G15_008	FROM->TO	BLOOMFIELD - GAVINS POINT 115KV CKT 1	120	120	0.24278	109.9831	NELIGH - PETERSBRG.N7115.00 115KV CKT 1
FDNS	09NR	0	15G	G15_008	FROM->TO	BLOOMFIELD - GAVINS POINT 115KV CKT 1	120	120	0.2114	109.8285	FT RANDAL - SPENCER 115KV CKT 1
FDNS	09NR	0	15G	G15_008	FROM->TO	BLOOMFIELD - GAVINS POINT 115KV CKT 1	120	120	0.18786	109.5955	FT RANDAL - WHITE SWAN 115KV CKT 1
FDNS	09NR	0	15G	G15_008	FROM->TO	BLOOMFIELD - GAVINS POINT 115KV CKT 1	120	120	0.18786	109.2877	TYNDALL - WHITE SWAN 115KV CKT 1
FDNS	09NR	0	15G	G15_008	FROM->TO	BLOOMFIELD - GAVINS POINT 115KV CKT 1	120	120	0.19123	109.2832	GEN652575 1-GAVINS POINT
FDNS	09NR	0	15G	G15_008	FROM->TO	BLOOMFIELD - GAVINS POINT 115KV CKT 1	120	120	0.19123	109.2832	GEN652576 2-GAVINS POINT
FDNS	09NR	0	15G	G15_008	FROM->TO	BLOOMFIELD - GAVINS POINT 115KV CKT 1	120	120	0.18999	109.2460	FT THOMPSON - FTTHOM2-LNX3345.00 345KV CKT Z
FDNS	09NR	0	15G	G15_008	FROM->TO	BLOOMFIELD - GAVINS POINT 115KV CKT 1	120	120	0.18999	109.2424	GRPRAR2-LNX3345.00 - YANKTON 345KV CKT Z

SOLUTION	GROUP	SCENARIO	SEASON	SOURCE	DIRECTION	MONITORED ELEMENT	RATEA (MVA)	RATEB(MVA)	TDF	TC%LOADING (% MVA)	CONTINGENCY
FDNS	09NR	0	15G	G15_008	FROM->TO	BLOOMFIELD - GAVINS POINT 115KV CKT 1	120	120	0.18999	109.2373	FTTHOM2-LNX3345.00 - GRPRAR2-LNX3345.00 345KV CKT 1
FDNS	09NR	0	15G	G15_008	FROM->TO	BLOOMFIELD - GAVINS POINT 115KV CKT 1	120	120	0.20298	108.9304	HOSKINS - NORTH NORFOLK 115KV CKT 1
FDNSLock	09NR	0	15G	G15_008	FROM->TO	BLOOMFIELD - GAVINS POINT 115KV CKT 1	120	120	0.19123	108.8137	GEN659103 1-ANTELOPE VALLEY UNIT1
FDNSLock	09NR	0	15G	G15_008	FROM->TO	BLOOMFIELD - GAVINS POINT 115KV CKT 1	120	120	0.19123	108.8137	GEN659107 2-ANTELOPE VALLEY UNIT2
FDNS	09NR	0	15G	G15_008	FROM->TO	BLOOMFIELD - GAVINS POINT 115KV CKT 1	120	120	0.1906	108.6252	FT RANDAL - G14_023T 230.00 230KV CKT 1
FDNSLock	09NR	0	15G	G15_008	FROM->TO	BLOOMFIELD - GAVINS POINT 115KV CKT 1	120	120	0.19123	108.5752	GEN659111 2-LELAND OLDS UNIT2
FDNS	09NR	0	15G	G15_008	FROM->TO	BLOOMFIELD - GAVINS POINT 115KV CKT 1	120	120	0.19062	108.5660	RAUN - SIOUX CITY 345KV CKT 1
FDNS	09ALL	0	15SP	G15_008	FROM->TO	BLOOMFIELD - GAVINS POINT 115KV CKT 1	120	120	0.24459	107.6509	PETERSBRG.N7115.00 - PETERSBURG 115KV CKT Z1
FDNS	09ALL	0	15SP	G15_008	FROM->TO	BLOOMFIELD - GAVINS POINT 115KV CKT 1	120	120	0.24459	106.5787	ALBION - PETERSBURG 115KV CKT 1
FDNS	09NR	0	15G	G15_008	FROM->TO	BLOOMFIELD - GAVINS POINT 115KV CKT 1	120	120	0.19123	106.0381	BASE CASE
FDNS	09NR	0	15G	G15_008	FROM->TO	BLOOMFIELD - GAVINS POINT 115KV CKT 1	120	120	0.19036	103.5512	UTICA JCT - VFODNES 230KV CKT 1
FDNS	09NR	0	15G	G15_008	FROM->TO	BLOOMFIELD - GAVINS POINT 115KV CKT 1	120	120	0.18027	103.2201	DAK02WAPAB2
FDNS	09NR	0	15G	G15_008	FROM->TO	BLOOMFIELD - GAVINS POINT 115KV CKT 1	120	120	0.18024	103.0973	UTICA JCT (UJ KV3A) 230/115/13.2KV TRANSFORMER CKT 1
FDNS	09NR	0	15G	G15_008	FROM->TO	BLOOMFIELD - GAVINS POINT 115KV CKT 1	120	120	0.19123	102.9432	GEN645062 W-TPWPBG1W 0.6900
FDNS	09NR	0	15G	G15_008	FROM->TO	BLOOMFIELD - GAVINS POINT 115KV CKT 1	120	120	0.18572	101.4523	BERSFORD - MANNING 115KV CKT 1
FDNS	09NR	0	15G	G15_008	FROM->TO	BLOOMFIELD - GAVINS POINT 115KV CKT 1	120	120	0.1906	100.6822	KELLY - MEADOWGROVE4230.00 230KV CKT 1
FDNS	09NR	0	15G	G15_008	FROM->TO	BLOOMFIELD - GAVINS POINT 115KV CKT 1	120	120	0.19123	100.0000	GEN640431 1-LAREDO.GEN1W0.6900
FDNS	09NR	0	15G	G15_008	FROM->TO	BLOOMFIELD - GAVINS POINT 115KV CKT 1	120	120	0.18999	100.0000	GRAND ISLAND - HOLT.CO3 345.00 345KV CKT 1
FDNS	09NR	0	15G	G15_008	FROM->TO	BLOOMFIELD - GAVINS POINT 115KV CKT 1	120	120	0.18233	99.9000	BELDEN - HARTINGTON 115KV CKT 1
FDNS	09NR	0	15G	G15_008	FROM->TO	BLOOMFIELD - GAVINS POINT 115KV CKT 1	120	120	0.18572	99.8000	MANNING - SPIRIT MOUND 115KV CKT 1
FDNS	09ALL	0	15G	G15_008	TO->FROM	COLUMBUS - GENOA 115KV CKT 1	137	137	0.25175	104.2341	COUNTY LINE - NELIGH.EAST7115.00 115KV CKT 1
FDNS	09ALL	0	15G	G15_008	TO->FROM	COLUMBUS - GENOA 115KV CKT 1	137	137	0.25175	104.1876	LN-1163-2
FDNS	09ALL	0	15G	G15_008	TO->FROM	COLUMBUS - GENOA 115KV CKT 1	137	137	0.25175	104.0606	BATTLE CREEK - COUNTY LINE 115KV CKT 1
FDNS	09ALL	0	15G	G15_008	TO->FROM	COLUMBUS - GENOA 115KV CKT 1	137	137	0.25175	102.4404	BATTLE CREEK - NORTH NORFOLK 115KV CKT 1
FDNS	09ALL	0	15G	G15_008	TO->FROM	COUNTY LINE - NELIGH.EAST7115.00 115KV CKT 1	240	240	0.51665	121.5520	BLOOMFIELD - GAVINS POINT 115KV CKT 1
FDNS	09ALL	0	15G	G15_008	TO->FROM	COUNTY LINE - NELIGH.EAST7115.00 115KV CKT 1	240	240	0.52896	117.9419	PETERSBRG.N7115.00 - PETERSBURG 115KV CKT Z1
FDNS	09ALL	0	15G	G15_008	TO->FROM	COUNTY LINE - NELIGH.EAST7115.00 115KV CKT 1	240	240	0.52896	117.7429	ALBION - PETERSBURG 115KV CKT 1
FDNS	09ALL	0	15WP	G15_008	TO->FROM	COUNTY LINE - NELIGH.EAST7115.00 115KV CKT 1	240	240	0.51667	116.2834	BLOOMFIELD - GAVINS POINT 115KV CKT 1
FDNS	09ALL	0	15WP	G15_008	TO->FROM	COUNTY LINE - NELIGH.EAST7115.00 115KV CKT 1	240	240	0.52892	115.3582	PETERSBRG.N7115.00 - PETERSBURG 115KV CKT Z1
FDNS	09ALL	0	15WP	G15_008	TO->FROM	COUNTY LINE - NELIGH.EAST7115.00 115KV CKT 1	240	240	0.52892	114.9546	ALBION - PETERSBURG 115KV CKT 1
FDNS	09NR	0	15G	G15_008	TO->FROM	COUNTY LINE - NELIGH.EAST7115.00 115KV CKT 1	240	240	0.51056	104.4721	BLOOMFIELD - GAVINS POINT 115KV CKT 1
FDNS	09ALL	0	15G	G15_008	TO->FROM	COUNTY LINE - NELIGH.EAST7115.00 115KV CKT 1	240	240	0.47829	103.1203	WAPA-OG-2
FDNS	09ALL	0	15G	G15_008	TO->FROM	COUNTY LINE - NELIGH.EAST7115.00 115KV CKT 1	240	240	0.46337	101.5236	ALBION - GENOA 115KV CKT 1
FDNS	09ALL	0	15G	G15_008	TO->FROM	COUNTY LINE - NELIGH.EAST7115.00 115KV CKT 1	240	240	0.51665	101.4398	CREIGHTON - NELIGH.EAST7115.00 115KV CKT 1
FDNS	09ALL	0	15SP	G15_008	TO->FROM	COUNTY LINE - NELIGH.EAST7115.00 115KV CKT 1	240	240	0.52891	101.2925	PETERSBRG.N7115.00 - PETERSBURG 115KV CKT Z1
FDNS	09NR	0	15G	G15_008	TO->FROM	COUNTY LINE - NELIGH.EAST7115.00 115KV CKT 1	240	240	0.52762	101.2895	PETERSBRG.N7115.00 - PETERSBURG 115KV CKT Z1
FDNS	09NR	0	15G	G15_008	TO->FROM	COUNTY LINE - NELIGH.EAST7115.00 115KV CKT 1	240	240	0.52762	101.0961	ALBION - PETERSBURG 115KV CKT 1
FDNS	09ALL	0	15G	G15_008	TO->FROM	COUNTY LINE - NELIGH.EAST7115.00 115KV CKT 1	240	240	0.46337	100.2221	COLUMBUS - GENOA 115KV CKT 1
FDNS	09ALL	0	15SP	G15_008	TO->FROM	COUNTY LINE - NELIGH.EAST7115.00 115KV CKT 1	240	240	0.52891	100.0656	ALBION - PETERSBURG 115KV CKT 1
FDNS	09ALL	0	15G	G15_008	TO->FROM	COUNTY LINE - NELIGH.EAST7115.00 115KV CKT 1	240	240	0.46387	100.0000	WAPA-OG-1
FDNS	09NR	0	15G	G15_008	FROM->TO	G14-059T 230.00 - OGALLALA 230KV CKT 1	320	320	0.03434	125.8320	KEYSTONE - SIDNEY 345KV CKT 1
FDNS	00NR	0	15SP	G15_008	FROM->TO	G14-059T 230.00 - OGALLALA 230KV CKT 1	320	320	0.03308	124.5109	KEYSTONE - SIDNEY 345KV CKT 1
FDNS	00NR	0	15WP	G15_008	FROM->TO	G14-059T 230.00 - OGALLALA 230KV CKT 1	320	320	0.03106	115.6280	KEYSTONE - SIDNEY 345KV CKT 1
FDNS	09ALL	0	15G	G15_008	TO->FROM	NORFOLK - NORTH NORFOLK 115KV CKT 1	120	120	0.38233	136.8426	HOSKINS - NORTH NORFOLK 115KV CKT 1
FDNS	09NR	0	15G	G15_008	TO->FROM	NORFOLK - NORTH NORFOLK 115KV CKT 1	120	120	0.37852	116.1856	HOSKINS - NORTH NORFOLK 115KV CKT 1
FDNS	09ALL	0	15WP	G15_008	TO->FROM	NORFOLK - NORTH NORFOLK 115KV CKT 1	120	120	0.38232	113.8782	HOSKINS - NORTH NORFOLK 115KV CKT 1
FDNS	09ALL	0	15G	G15_008	FROM->TO	PETERSBRG.N7115.00 - PETERSBURG 115KV CKT Z1	137	137	0.37876	155.4987	LN-1163-2
FDNS	09ALL	0	15G	G15_008	FROM->TO	PETERSBRG.N7115.00 - PETERSBURG 115KV CKT Z1	137	137	0.37876	155.4766	COUNTY LINE - NELIGH.EAST7115.00 115KV CKT 1
FDNS	09ALL	0	15G	G15_008	FROM->TO	PETERSBRG.N7115.00 - PETERSBURG 115KV CKT Z1	137	137	0.37876	155.2148	BATTLE CREEK - COUNTY LINE 115KV CKT 1
FDNS	09ALL	0	15WP	G15_008	FROM->TO	PETERSBRG.N7115.00 - PETERSBURG 115KV CKT Z1	137	137	0.37869	154.5762	LN-1163-2
FDNS	09ALL	0	15WP	G15_008	FROM->TO	PETERSBRG.N7115.00 - PETERSBURG 115KV CKT Z1	137	137	0.37869	154.5082	COUNTY LINE - NELIGH.EAST7115.00 115KV CKT 1
FDNS	09ALL	0	15WP	G15_008	FROM->TO	PETERSBRG.N7115.00 - PETERSBURG 115KV CKT Z1	137	137	0.37869	154.3516	BATTLE CREEK - COUNTY LINE 115KV CKT 1
FDNS	09ALL	0	15SP	G15_008	FROM->TO	PETERSBRG.N7115.00 - PETERSBURG 115KV CKT Z1	137	137	0.37877	153.0423	LN-1163-2
FDNS	09ALL	0	15SP	G15_008	FROM->TO	PETERSBRG.N7115.00 - PETERSBURG 115KV CKT Z1	137	137	0.37877	152.9264	COUNTY LINE - NELIGH.EAST7115.00 115KV CKT 1
FDNS	09ALL	0	15G	G15_008	FROM->TO	PETERSBRG.N7115.00 - PETERSBURG 115KV CKT Z1	137	137	0.37876	152.9175	BATTLE CREEK - NORTH NORFOLK 115KV CKT 1
FDNS	09ALL	0	15SP	G15_008	FROM->TO	PETERSBRG.N7115.00 - PETERSBURG 115KV CKT Z1	137	137	0.37877	151.1718	BATTLE CREEK - COUNTY LINE 115KV CKT 1
FDNS	09ALL	0	15WP	G15_008	FROM->TO	PETERSBRG.N7115.00 - PETERSBURG 115KV CKT Z1	137	137	0.37869	149.7861	BATTLE CREEK - NORTH NORFOLK 115KV CKT 1
FDNS	09ALL	0	15SP	G15_008	FROM->TO	PETERSBRG.N7115.00 - PETERSBURG 115KV CKT Z1	137	137	0.37877	142.3276	BATTLE CREEK - NORTH NORFOLK 115KV CKT 1
FDNS	09NR	0	15G	G15_008	FROM->TO	PETERSBRG.N7115.00 - PETERSBURG 115KV CKT Z1	137	137	0.38313	131.3560	LN-1163-2
FDNS	09NR	0	15G	G15_008	FROM->TO	PETERSBRG.N7115.00 - PETERSBURG 115KV CKT Z1	137	137	0.38313	131.2865	COUNTY LINE - NELIGH.EAST7115.00 115KV CKT 1
FDNS	09NR	0	15G	G15_008	FROM->TO	PETERSBRG.N7115.00 - PETERSBURG 115KV CKT Z1	137	137	0.38313	131.1352	BATTLE CREEK - COUNTY LINE 115KV CKT 1
FDNS	09NR	0	15G	G15_008	FROM->TO	PETERSBRG.N7115.00 - PETERSBURG 115KV CKT Z1	137	137	0.38313	129.1919	BATTLE CREEK - NORTH NORFOLK 115KV CKT 1
FDNS	09ALL	0	15SP	G15_008	FROM->TO	PETERSBRG.N7115.00 - PETERSBURG 115KV CKT Z1	137	137	0.27087	127.8880	BLOOMFIELD - GAVINS POINT 115KV CKT 1
FDNS	09ALL	0	15WP	G15_008	FROM->TO	PETERSBRG.N7115.00 - PETERSBURG 115KV CKT Z1	137	137	0.27079	127.4120	BLOOMFIELD - GAVINS POINT 115KV CKT 1
FDNS	09ALL	0	15G	G15_008	FROM->TO	PETERSBRG.N7115.00 - PETERSBURG 115KV CKT Z1	137	137	0.27083	126.1727	BLOOMFIELD - GAVINS POINT 115KV CKT 1
FDNS	09ALL	0	15SP	G15_008	FROM->TO	PETERSBRG.N7115.00 - PETERSBURG 115KV CKT Z1	137	137	0.27441	120.4065	LN-1164
FDNS	09ALL	0	15SP	G15_008	FROM->TO	PETERSBRG.N7115.00 - PETERSBURG 115KV CKT Z1	137	137	0.27441	120.3070	CLEARWATER - NELIGH 115KV CKT 1
FDNS	09ALL	0	15SP	G15_008	FROM->TO	PETERSBRG.N7115.00 - PETERSBURG 115KV CKT Z1	137	137	0.22272	120.1593	KELLY - MEADOWGROVE4230.00 230KV CKT 1
FDNS	09ALL	0	15SP	G15_008	FROM->TO	PETERSBRG.N7115.00 - PETERSBURG 115KV CKT Z1	137	137	0.27087	119.9838	CREIGHTON - NELIGH.EAST7115.00 115KV CKT 1
FDNS	09ALL	0	15SP	G15_008	FROM->TO	PETERSBRG.N7115.00 - PETERSBURG 115KV CKT Z1	137	137	0.21621	118.1999	BROKEN BOW - LOUP CITY 115KV CKT 1
FDNS	09ALL	0	15SP	G15_008	FROM->TO	PETERSBRG.N7115.00 - PETERSBURG 115KV CKT Z1	137	137	0.27441	117.8326	CLEARWATER - ONEILL 115KV CKT 1
FDNS	09ALL	0	15SP	G15_008	FROM->TO	PETERSBRG.N7115.00 - PETERSBURG 115KV CKT Z1	137	137	0.22321	116.6050	GRPRAR1-LNX3345.00 - HOLT.CO3 345.00 345KV CKT 1
FDNS	09ALL	0	15SP	G15_008	FROM->TO	PETERSBRG.N7115.00 - PETERSBURG 115KV CKT Z1	137	137	0.22321	116.6005	GRPRAR1-LNX3345.00 - YANKTON 345KV CKT Z
FDNS	09ALL	0	15SP	G15_008	FROM->TO	PETERSBRG.N7115.00 - PETERSBURG 115KV CKT Z1	137	137	0.22203	114.8083	GEN640010 1-GERALD GENTLEMAN STATION UNIT 1
FDNS	09ALL	0	15SP	G15_008	FROM->TO	PETERSBRG.N7115.00 - PETERSBURG 115KV CKT Z1	137	137	0.22203	114.7289	GEN640011 2-GERALD GENTLEMAN STATION UNIT 2

SOLUTION	GROUP	SCENARIO	SEASON	SOURCE	DIRECTION	MONITORED ELEMENT	RATEA (MVA)	RATEB(MVA)	TDF	TC%LOADING (% MVA)	CONTINGENCY
FDNS	09ALL	0	15SP	G15_008	FROM->TO	PETERSBRG.N7115.00 - PETERSBURG 115KV CKT Z1	137	137	0.22203	114.3698	GEN640428 1-BRKNBW.GEN1W0.6900
FDNS	09ALL	0	15SP	G15_008	FROM->TO	PETERSBRG.N7115.00 - PETERSBURG 115KV CKT Z1	137	137	0.2308	114.3674	GAVINS POINT - YANKON JCT 115KV CKT 1
FDNS	09ALL	0	15SP	G15_008	FROM->TO	PETERSBRG.N7115.00 - PETERSBURG 115KV CKT Z1	137	137	0.22391	114.3628	NEB02WAPAB2
FDNS	09ALL	0	15SP	G15_008	FROM->TO	PETERSBRG.N7115.00 - PETERSBURG 115KV CKT Z1	137	137	0.22203	114.1779	GEN640449 W-BRKNBW.GEN2W0.6900
FDNS	09ALL	0	15WP	G15_008	FROM->TO	PETERSBRG.N7115.00 - PETERSBURG 115KV CKT Z1	137	137	0.27079	113.7662	CREIGHTON - NELIGH.EAST7115.00 115KV CKT 1
FDNS	09ALL	0	15SP	G15_008	FROM->TO	PETERSBRG.N7115.00 - PETERSBURG 115KV CKT Z1	137	137	0.22487	113.7240	COLUMEAST - SHELL CREEK 345KV CKT 1
FDNS	09ALL	0	15SP	G15_008	FROM->TO	PETERSBRG.N7115.00 - PETERSBURG 115KV CKT Z1	137	137	0.22391	113.7007	GAVINS POINT - HARTINGTON 115KV CKT 1
FDNS	09ALL	0	15SP	G15_008	FROM->TO	PETERSBRG.N7115.00 - PETERSBURG 115KV CKT Z1	137	137	0.22387	113.5770	GAVINS POINT - SPIRIT MOUND 115KV CKT 1
FDNS	09ALL	0	15WP	G15_008	FROM->TO	PETERSBRG.N7115.00 - PETERSBURG 115KV CKT Z1	137	137	0.27431	112.6940	LN-1164
FDNS	09ALL	0	15WP	G15_008	FROM->TO	PETERSBRG.N7115.00 - PETERSBURG 115KV CKT Z1	137	137	0.27431	112.6793	CLEARWATER - NELIGH 115KV CKT 1
FDNS	09ALL	0	15WP	G15_008	FROM->TO	PETERSBRG.N7115.00 - PETERSBURG 115KV CKT Z1	137	137	0.27431	112.1564	CLEARWATER - ONEILL 115KV CKT 1
FDNS	09ALL	0	15SP	G15_008	FROM->TO	PETERSBRG.N7115.00 - PETERSBURG 115KV CKT Z1	137	137	0.22203	111.3164	BASE CASE
FDNS	09ALL	0	15SP	G15_008	FROM->TO	PETERSBRG.N7115.00 - PETERSBURG 115KV CKT Z1	137	137	0.22203	111.1364	NUCOR-1
FDNS	09ALL	0	15WP	G15_008	FROM->TO	PETERSBRG.N7115.00 - PETERSBURG 115KV CKT Z1	137	137	0.21614	110.9414	BROKEN BOW - LOUP CITY 115KV CKT 1
FDNS	09ALL	0	15WP	G15_008	FROM->TO	PETERSBRG.N7115.00 - PETERSBURG 115KV CKT Z1	137	137	0.22261	110.7582	KELLY - MEADOWGROVE4230.00 230KV CKT 1
FDNS	09ALL	0	15G	G15_008	FROM->TO	PETERSBRG.N7115.00 - PETERSBURG 115KV CKT Z1	137	137	0.27083	110.6756	CREIGHTON - NELIGH.EAST7115.00 115KV CKT 1
FDNS	09ALL	0	15WP	G15_008	FROM->TO	PETERSBRG.N7115.00 - PETERSBURG 115KV CKT Z1	137	137	0.27079	109.5281	BLOOMFIELD - CREIGHTON 115KV CKT 1
FDNS	09ALL	0	15G	G15_008	FROM->TO	PETERSBRG.N7115.00 - PETERSBURG 115KV CKT Z1	137	137	0.27436	109.2135	LN-1164
FDNS	09ALL	0	15G	G15_008	FROM->TO	PETERSBRG.N7115.00 - PETERSBURG 115KV CKT Z1	137	137	0.27436	109.2003	CLEARWATER - NELIGH 115KV CKT 1
FDNS	09ALL	0	15SP	G15_008	FROM->TO	PETERSBRG.N7115.00 - PETERSBURG 115KV CKT Z1	137	137	0.22272	109.1942	FT RANDAL - G14_023T 230.00 230KV CKT 1
FDNS	09ALL	0	15SP	G15_008	FROM->TO	PETERSBRG.N7115.00 - PETERSBURG 115KV CKT Z1	137	137	0.22165	109.1542	MCCOOL - MOORE 345KV CKT 1
FDNS	09ALL	0	15SP	G15_008	FROM->TO	PETERSBRG.N7115.00 - PETERSBURG 115KV CKT Z1	137	137	0.22173	108.8890	GRAND ISLAND - MCCOOL 345KV CKT 1
FDNS	09ALL	0	15G	G15_008	FROM->TO	PETERSBRG.N7115.00 - PETERSBURG 115KV CKT Z1	137	137	0.27436	108.7892	CLEARWATER - ONEILL 115KV CKT 1
FDNS	09ALL	0	15SP	G15_008	FROM->TO	PETERSBRG.N7115.00 - PETERSBURG 115KV CKT Z1	137	137	0.22203	108.6736	GEN659111 2-LELAND OLDS UNIT2
FDNS	09ALL	0	15SP	G15_008	FROM->TO	PETERSBRG.N7115.00 - PETERSBURG 115KV CKT Z1	137	137	0.21087	108.6432	NELIGH - NELIGH.EAST7115.00 115KV CKT 1
FDNS	09ALL	0	15SP	G15_008	FROM->TO	PETERSBRG.N7115.00 - PETERSBURG 115KV CKT Z1	137	137	0.22203	108.4592	GEN640421 1-CROFTON HILLS WIND
FDNS	09ALL	0	15SP	G15_008	FROM->TO	PETERSBRG.N7115.00 - PETERSBURG 115KV CKT Z1	137	137	0.22203	108.4259	GEN659103 1-ANTELOPE VALLEY UNIT1
FDNS	09ALL	0	15SP	G15_008	FROM->TO	PETERSBRG.N7115.00 - PETERSBURG 115KV CKT Z1	137	137	0.22203	108.4259	GEN659107 2-ANTELOPE VALLEY UNIT2
FDNS	09ALL	0	15SP	G15_008	FROM->TO	PETERSBRG.N7115.00 - PETERSBURG 115KV CKT Z1	137	137	0.22321	108.3873	FTTHOM2-LNX3345.00 - GRPRAR2-LNX3345.00 345KV CKT 1
FDNS	09ALL	0	15SP	G15_008	FROM->TO	PETERSBRG.N7115.00 - PETERSBURG 115KV CKT Z1	137	137	0.22321	108.2667	GRPRAR2-LNX3345.00 - YANKTON 345KV CKT Z
FDNS	09ALL	0	15SP	G15_008	FROM->TO	PETERSBRG.N7115.00 - PETERSBURG 115KV CKT Z1	137	137	0.22321	108.2446	FT THOMPSON - FTTHOM2-LNX3345.00 345KV CKT Z
FDNS	09ALL	0	15SP	G15_008	FROM->TO	PETERSBRG.N7115.00 - PETERSBURG 115KV CKT Z1	137	137	0.22203	108.2082	SPALDING 115KV SWITCHED SHUNT
FDNSLock	09ALL	0	15SP	G15_008	FROM->TO	PETERSBRG.N7115.00 - PETERSBURG 115KV CKT Z1	137	137	0.22203	108.1598	SPALDING 115KV SWITCHED SHUNT
FDNS	09ALL	0	15WP	G15_008	FROM->TO	PETERSBRG.N7115.00 - PETERSBURG 115KV CKT Z1	137	137	0.2307	107.9249	GAVINS POINT - YANKON JCT 115KV CKT 1
FDNS	09ALL	0	15G	G15_008	FROM->TO	PETERSBRG.N7115.00 - PETERSBURG 115KV CKT Z1	137	137	0.27083	107.6857	BLOOMFIELD - CREIGHTON 115KV CKT 1
FDNS	09ALL	0	15SP	G15_008	FROM->TO	PETERSBRG.N7115.00 - PETERSBURG 115KV CKT Z1	137	137	0.20607	107.4746	NELIGH - NELIGH.EAST7115.00 115KV CKT 2
FDNS	09ALL	0	15SP	G15_008	FROM->TO	PETERSBRG.N7115.00 - PETERSBURG 115KV CKT Z1	137	137	0.22203	107.4286	ALBION 115KV SWITCHED SHUNT
FDNSLock	09ALL	0	15SP	G15_008	FROM->TO	PETERSBRG.N7115.00 - PETERSBURG 115KV CKT Z1	137	137	0.22203	107.4141	ALBION 115KV SWITCHED SHUNT
FDNS	09ALL	0	15SP	G15_008	FROM->TO	PETERSBRG.N7115.00 - PETERSBURG 115KV CKT Z1	137	137	0.24575	107.2273	LN-WAPA6
FDNS	09ALL	0	15SP	G15_008	FROM->TO	PETERSBRG.N7115.00 - PETERSBURG 115KV CKT Z1	137	137	0.24575	107.2273	NEB001NPPB2
FDNS	09ALL	0	15SP	G15_008	FROM->TO	PETERSBRG.N7115.00 - PETERSBURG 115KV CKT Z1	137	137	0.24575	107.1458	ONEILL - SPENCER 115KV CKT 1
FDNS	09ALL	0	15G	G15_008	FROM->TO	PETERSBRG.N7115.00 - PETERSBURG 115KV CKT Z1	137	137	0.22268	106.8615	KELLY - MEADOWGROVE4230.00 230KV CKT 1
FDNS	09ALL	0	15G	G15_008	FROM->TO	PETERSBRG.N7115.00 - PETERSBURG 115KV CKT Z1	137	137	0.2162	106.4689	BROKEN BOW - LOUP CITY 115KV CKT 1
FDNS	09ALL	0	15SP	G15_008	FROM->TO	PETERSBRG.N7115.00 - PETERSBURG 115KV CKT Z1	137	137	0.24575	106.3182	FT RANDAL - SPENCER 115KV CKT 1
FDNS	09NR	0	15G	G15_008	FROM->TO	PETERSBRG.N7115.00 - PETERSBURG 115KV CKT Z1	137	137	0.27609	106.2997	BLOOMFIELD - GAVINS POINT 115KV CKT 1
FDNS	09ALL	0	15WP	G15_008	FROM->TO	PETERSBRG.N7115.00 - PETERSBURG 115KV CKT Z1	137	137	0.24567	106.2772	LN-WAPA6
FDNS	09ALL	0	15WP	G15_008	FROM->TO	PETERSBRG.N7115.00 - PETERSBURG 115KV CKT Z1	137	137	0.24567	106.2772	NEB001NPPB2
FDNS	09ALL	0	15WP	G15_008	FROM->TO	PETERSBRG.N7115.00 - PETERSBURG 115KV CKT Z1	137	137	0.24567	106.1937	ONEILL - SPENCER 115KV CKT 1
FDNS	09ALL	0	15WP	G15_008	FROM->TO	PETERSBRG.N7115.00 - PETERSBURG 115KV CKT Z1	137	137	0.22193	105.9337	GEN640428 1-BRKNBW.GEN1W0.6900
FDNS	09ALL	0	15SP	G15_008	FROM->TO	PETERSBRG.N7115.00 - PETERSBURG 115KV CKT Z1	137	137	0.22203	105.8173	GEN640418 1-ELKHORN RIDGE WIND
FDNS	09ALL	0	15WP	G15_008	FROM->TO	PETERSBRG.N7115.00 - PETERSBURG 115KV CKT Z1	137	137	0.22193	105.7342	GEN640449 W-BRKNBW.GEN2W0.6900
FDNS	09ALL	0	15WP	G15_008	FROM->TO	PETERSBRG.N7115.00 - PETERSBURG 115KV CKT Z1	137	137	0.22193	105.7155	GEN640010 1-GERALD GENTLEMAN STATION UNIT 1
FDNS	09ALL	0	15WP	G15_008	FROM->TO	PETERSBRG.N7115.00 - PETERSBURG 115KV CKT Z1	137	137	0.22783	105.6697	UTICA - YANKON JCT 115KV CKT 1
FDNS	09ALL	0	15WP	G15_008	FROM->TO	PETERSBRG.N7115.00 - PETERSBURG 115KV CKT Z1	137	137	0.22381	105.6688	NEB02WAPAB2
FDNS	09ALL	0	15WP	G15_008	FROM->TO	PETERSBRG.N7115.00 - PETERSBURG 115KV CKT Z1	137	137	0.22378	105.6554	GAVINS POINT - SPIRIT MOUND 115KV CKT 1
FDNS	09ALL	0	15WP	G15_008	FROM->TO	PETERSBRG.N7115.00 - PETERSBURG 115KV CKT Z1	137	137	0.22309	105.6255	GRPRAR1-LNX3345.00 - YANKTON 345KV CKT Z
FDNS	09ALL	0	15WP	G15_008	FROM->TO	PETERSBRG.N7115.00 - PETERSBURG 115KV CKT Z1	137	137	0.22309	105.6248	GRPRAR1-LNX3345.00 - HOLT.CO3 345.00 345KV CKT 1
FDNS	09ALL	0	15WP	G15_008	FROM->TO	PETERSBRG.N7115.00 - PETERSBURG 115KV CKT Z1	137	137	0.24567	105.2169	FT RANDAL - SPENCER 115KV CKT 1
FDNS	09ALL	0	15WP	G15_008	FROM->TO	PETERSBRG.N7115.00 - PETERSBURG 115KV CKT Z1	137	137	0.22381	105.0967	GAVINS POINT - HARTINGTON 115KV CKT 1
FDNS	09ALL	0	15WP	G15_008	FROM->TO	PETERSBRG.N7115.00 - PETERSBURG 115KV CKT Z1	137	137	0.2335	105.0696	HOSKINS - NORTH NORFOLK 115KV CKT 1
FDNS	09ALL	0	15G	G15_008	FROM->TO	PETERSBRG.N7115.00 - PETERSBURG 115KV CKT Z1	137	137	0.24572	104.9802	LN-WAPA6
FDNS	09ALL	0	15G	G15_008	FROM->TO	PETERSBRG.N7115.00 - PETERSBURG 115KV CKT Z1	137	137	0.24572	104.9802	NEB001NPPB2
FDNS	09ALL	0	15G	G15_008	FROM->TO	PETERSBRG.N7115.00 - PETERSBURG 115KV CKT Z1	137	137	0.24572	104.9474	ONEILL - SPENCER 115KV CKT 1
FDNS	09ALL	0	15G	G15_008	FROM->TO	PETERSBRG.N7115.00 - PETERSBURG 115KV CKT Z1	137	137	0.24572	104.5770	FT RANDAL - SPENCER 115KV CKT 1
FDNS	09ALL	0	15G	G15_008	FROM->TO	PETERSBRG.N7115.00 - PETERSBURG 115KV CKT Z1	137	137	0.23076	103.6051	GAVINS POINT - YANKON JCT 115KV CKT 1
FDNS	09ALL	0	15WP	G15_008	FROM->TO	PETERSBRG.N7115.00 - PETERSBURG 115KV CKT Z1	137	137	0.22193	102.8386	BASE CASE
FDNS	09ALL	0	15G	G15_008	FROM->TO	PETERSBRG.N7115.00 - PETERSBURG 115KV CKT Z1	137	137	0.22318	102.5250	GRPRAR1-LNX3345.00 - HOLT.CO3 345.00 345KV CKT 1
FDNS	09ALL	0	15G	G15_008	FROM->TO	PETERSBRG.N7115.00 - PETERSBURG 115KV CKT Z1	137	137	0.22318	102.5190	GRPRAR1-LNX3345.00 - YANKTON 345KV CKT Z
FDNS	09ALL	0	15G	G15_008	FROM->TO	PETERSBRG.N7115.00 - PETERSBURG 115KV CKT Z1	137	137	0.22788	102.4014	UTICA - YANKON JCT 115KV CKT 1
FDNS	09ALL	0	15G	G15_008	FROM->TO	PETERSBRG.N7115.00 - PETERSBURG 115KV CKT Z1	137	137	0.22199	102.3605	GEN640428 1-BRKNBW.GEN1W0.6900
FDNS	09ALL	0	15G	G15_008	FROM->TO	PETERSBRG.N7115.00 - PETERSBURG 115KV CKT Z1	137	137	0.23356	102.2354	HOSKINS - NORTH NORFOLK 115KV CKT 1
FDNS	09ALL	0	15G	G15_008	FROM->TO	PETERSBRG.N7115.00 - PETERSBURG 115KV CKT Z1	137	137	0.22199	102.1597	GEN640449 W-BRKNBW.GEN2W0.6900
FDNS	09ALL	0	15G	G15_008	FROM->TO	PETERSBRG.N7115.00 - PETERSBURG 115KV CKT Z1	137	137	0.22383	102.0894	GAVINS POINT - SPIRIT MOUND 115KV CKT 1
FDNS	09ALL	0	15G	G15_008	FROM->TO	PETERSBRG.N7115.00 - PETERSBURG 115KV CKT Z1	137	137	0.22563	101.7126	DAK02WAPAB2
FDNS	09ALL	0	15G	G15_008	FROM->TO	PETERSBRG.N7115.00 - PETERSBURG 115KV CKT Z1	137	137	0.22387	101.6400	NEB02WAPAB2

SOLUTION	GROUP	SCENARIO	SEASON	SOURCE	DIRECTION	MONITORED ELEMENT	RATEA (MVA)	RATEB(MVA)	TDF	TC%LOADING (% MVA)	CONTINGENCY
FDNS	09ALL	0	15G	G15_008	FROM->TO	PETERSBRG.N7115.00 - PETERSBURG 115KV CKT Z1	137	137	0.22483	101.5586	COLUMEAST - SHELL CREEK 345KV CKT 1
FDNS	09ALL	0	15G	G15_008	FROM->TO	PETERSBRG.N7115.00 - PETERSBURG 115KV CKT Z1	137	137	0.22199	101.4769	GEN640010 1-GERALD GENTLEMAN STATION UNIT 1
FDNS	09ALL	0	15WP	G15_008	FROM->TO	PETERSBRG.N7115.00 - PETERSBURG 115KV CKT Z1	137	137	0.22193	100.7011	GEN560350 1-G10-51 0.6900
FDNS	09ALL	0	15WP	G15_008	FROM->TO	PETERSBRG.N7115.00 - PETERSBURG 115KV CKT Z1	137	137	0.20598	100.6976	NELIGH - NELIGH.EAST7115.00 115KV CKT 2
FDNS	09ALL	0	15WP	G15_008	FROM->TO	PETERSBRG.N7115.00 - PETERSBURG 115KV CKT Z1	137	137	0.22031	100.6066	CROOKED CREEK (CR.CREEK T1) 230/115/13.8KV TRANSFORMER CKT 1
FDNS	09ALL	0	15WP	G15_008	FROM->TO	PETERSBRG.N7115.00 - PETERSBURG 115KV CKT Z1	137	137	0.22031	100.5881	BROKEN BOW - CROOKED CREEK 115KV CKT 1
FDNSLock	09ALL	0	15WP	G15_008	FROM->TO	PETERSBRG.N7115.00 - PETERSBURG 115KV CKT Z1	137	137	0.2214	100.5780	COLUMBUS - SCHUYLER 115KV CKT 1
FDNS	09ALL	0	15WP	G15_008	FROM->TO	PETERSBRG.N7115.00 - PETERSBURG 115KV CKT Z1	137	137	0.22193	100.3937	GEN635214 4-NEAL UNIT 4
FDNS	09ALL	0	15WP	G15_008	FROM->TO	PETERSBRG.N7115.00 - PETERSBURG 115KV CKT Z1	137	137	0.22161	100.2256	GRAND ISLAND - MCCOOL 345KV CKT 1
FDNS	09ALL	0	15WP	G15_008	FROM->TO	PETERSBRG.N7115.00 - PETERSBURG 115KV CKT Z1	137	137	0.22153	100.1090	MCCOOL - MOORE 345KV CKT 1
FDNS	09ALL	0	15WP	G15_008	FROM->TO	PETERSBRG.N7115.00 - PETERSBURG 115KV CKT Z1	137	137	0.22193	100.0894	GEN635213 3-NEAL UNIT 3
FDNS	09ALL	0	15WP	G15_008	FROM->TO	PETERSBRG.N7115.00 - PETERSBURG 115KV CKT Z1	137	137	0.22193	100.0000	GEN640421 1-CROFTON HILLS WIND
FDNS	09ALL	0	15WP	G15_008	FROM->TO	PETERSBRG.N7115.00 - PETERSBURG 115KV CKT Z1	137	137	0.22193	100.0000	GEN659111 2-LELAND OLDS UNIT2
FDNS	09ALL	0	20SP	G15_008	FROM->TO	PETERSBRG.N7115.00 - PETERSBURG 115KV CKT Z1	137	137	0.22527	99.8000	HOSKINS - NELIGH.EAST3345.00 345KV CKT 1
FDNS	09ALL	0	20SP	G15_008	FROM->TO	PETERSBRG.N7115.00 - PETERSBURG 115KV CKT Z1	137	137	0.22527	99.8000	NELIGH.EAST3345.00 (NELIGH.E T1) 345/115/13.8KV TRANSFORMER CKT 1
FDNS	09ALL	0	15WP	G15_008	FROM->TO	PETERSBRG.N7115.00 - PETERSBURG 115KV CKT Z1	137	137	0.22193	99.7000	GEN659103 1-ANTELOPE VALLEY UNIT1
FDNS	09ALL	0	15WP	G15_008	FROM->TO	PETERSBRG.N7115.00 - PETERSBURG 115KV CKT Z1	137	137	0.22193	99.7000	GEN659107 2-ANTELOPE VALLEY UNIT2
FDNS	09ALL	2	15SP	G15_008	TO->FROM	ALBION - PETERSBURG 115KV CKT 1	137	137	0.22221	107.7494	NELIGH.EAST3345.00 (NELIGH.E T1) 345/115/13.8KV TRANSFORMER CKT 1
FDNS	09ALL	2	15SP	G15_008	TO->FROM	ALBION - PETERSBURG 115KV CKT 1	137	137	0.22221	107.7136	HOSKINS - NELIGH.EAST3345.00 345KV CKT 1
FDNS	09ALL	2	15WP	G15_008	TO->FROM	ALBION - PETERSBURG 115KV CKT 1	137	137	0.22204	101.6329	NELIGH.EAST3345.00 (NELIGH.E T1) 345/115/13.8KV TRANSFORMER CKT 1
FDNS	09ALL	2	15WP	G15_008	TO->FROM	ALBION - PETERSBURG 115KV CKT 1	137	137	0.22204	101.6317	HOSKINS - NELIGH.EAST3345.00 345KV CKT 1
FDNS	09ALL	2	15G	G15_008	FROM->TO	BATTLE CREEK - NORTH NORFOLK 115KV CKT 1	193	193	0.41517	104.2902	NELIGH.EAST3345.00 (NELIGH.E T1) 345/115/13.8KV TRANSFORMER CKT 1
FDNS	09ALL	2	15G	G15_008	FROM->TO	BATTLE CREEK - NORTH NORFOLK 115KV CKT 1	193	193	0.41517	104.1450	HOSKINS - NELIGH.EAST3345.00 345KV CKT 1
FDNS	09NR	2	15G	G15_008	FROM->TO	BLOOMFIELD - GAVINS POINT 115KV CKT 1	120	120	0.19123	106.0028	HOSKINS - NELIGH.EAST3345.00 345KV CKT 1
FDNS	09NR	2	15G	G15_008	FROM->TO	BLOOMFIELD - GAVINS POINT 115KV CKT 1	120	120	0.19123	106.0002	NELIGH.EAST3345.00 (NELIGH.E T1) 345/115/13.8KV TRANSFORMER CKT 1
FDNS	09NR	2	15G	G15_008	FROM->TO	G14-059T 230.00 - OGALLALA 230KV CKT 1	320	320	0.03267	125.5977	KEYSTONE - SIDNEY 345KV CKT 1
FDNS	00NR	2	15SP	G15_008	FROM->TO	G14-059T 230.00 - OGALLALA 230KV CKT 1	320	320	0.03141	124.5047	KEYSTONE - SIDNEY 345KV CKT 1
FDNS	09ALL	2	15SP	G15_008	FROM->TO	PETERSBRG.N7115.00 - PETERSBURG 115KV CKT Z1	137	137	0.22221	111.3408	NELIGH.EAST3345.00 (NELIGH.E T1) 345/115/13.8KV TRANSFORMER CKT 1
FDNS	09ALL	2	15SP	G15_008	FROM->TO	PETERSBRG.N7115.00 - PETERSBURG 115KV CKT Z1	137	137	0.22221	111.3129	HOSKINS - NELIGH.EAST3345.00 345KV CKT 1
FDNS	09ALL	2	15WP	G15_008	FROM->TO	PETERSBRG.N7115.00 - PETERSBURG 115KV CKT Z1	137	137	0.22204	102.9109	HOSKINS - NELIGH.EAST3345.00 345KV CKT 1
FDNS	09ALL	2	15WP	G15_008	FROM->TO	PETERSBRG.N7115.00 - PETERSBURG 115KV CKT Z1	137	137	0.22204	102.9105	NELIGH.EAST3345.00 (NELIGH.E T1) 345/115/13.8KV TRANSFORMER CKT 1
FDNS	09ALL	3	15SP	G15_008	TO->FROM	ALBION - PETERSBURG 115KV CKT 1	137	137	0.22086	108.2729	NELIGH.EAST3345.00 (NELIGH.E T1) 345/115/13.8KV TRANSFORMER CKT 1
FDNS	09ALL	3	15SP	G15_008	TO->FROM	ALBION - PETERSBURG 115KV CKT 1	137	137	0.22086	108.2422	HOSKINS - NELIGH.EAST3345.00 345KV CKT 1
FDNS	09ALL	3	15WP	G15_008	TO->FROM	ALBION - PETERSBURG 115KV CKT 1	137	137	0.22072	101.9268	NELIGH.EAST3345.00 (NELIGH.E T1) 345/115/13.8KV TRANSFORMER CKT 1
FDNS	09ALL	3	15WP	G15_008	TO->FROM	ALBION - PETERSBURG 115KV CKT 1	137	137	0.22072	101.9264	HOSKINS - NELIGH.EAST3345.00 345KV CKT 1
FDNS	09ALL	3	15G	G15_008	FROM->TO	BATTLE CREEK - NORTH NORFOLK 115KV CKT 1	193	193	0.41309	104.1950	NELIGH.EAST3345.00 (NELIGH.E T1) 345/115/13.8KV TRANSFORMER CKT 1
FDNS	09ALL	3	15G	G15_008	FROM->TO	BATTLE CREEK - NORTH NORFOLK 115KV CKT 1	193	193	0.41309	104.0497	HOSKINS - NELIGH.EAST3345.00 345KV CKT 1
FDNS	09NR	3	15G	G15_008	FROM->TO	BLOOMFIELD - GAVINS POINT 115KV CKT 1	120	120	0.19072	106.0211	HOSKINS - NELIGH.EAST3345.00 345KV CKT 1
FDNS	09NR	3	15G	G15_008	FROM->TO	BLOOMFIELD - GAVINS POINT 115KV CKT 1	120	120	0.19072	106.0184	NELIGH.EAST3345.00 (NELIGH.E T1) 345/115/13.8KV TRANSFORMER CKT 1
FDNS	09ALL	3	15SP	G15_008	FROM->TO	PETERSBRG.N7115.00 - PETERSBURG 115KV CKT Z1	137	137	0.22086	111.8661	NELIGH.EAST3345.00 (NELIGH.E T1) 345/115/13.8KV TRANSFORMER CKT 1
FDNS	09ALL	3	15SP	G15_008	FROM->TO	PETERSBRG.N7115.00 - PETERSBURG 115KV CKT Z1	137	137	0.22086	111.8427	HOSKINS - NELIGH.EAST3345.00 345KV CKT 1
FDNS	09ALL	3	15WP	G15_008	FROM->TO	PETERSBRG.N7115.00 - PETERSBURG 115KV CKT Z1	137	137	0.22072	103.2055	HOSKINS - NELIGH.EAST3345.00 345KV CKT 1
FDNS	09ALL	3	15WP	G15_008	FROM->TO	PETERSBRG.N7115.00 - PETERSBURG 115KV CKT Z1	137	137	0.22072	103.2043	NELIGH.EAST3345.00 (NELIGH.E T1) 345/115/13.8KV TRANSFORMER CKT 1
FDNS	09ALL	4	15SP	G15_008	TO->FROM	ALBION - PETERSBURG 115KV CKT 1	137	137	0.07192	100.0000	BASE CASE
FDNS	09ALL	4	15G	G15_008	FROM->TO	BATTLE CREEK - NORTH NORFOLK 115KV CKT 1	193	193	0.3742	99.8000	NELIGH.EAST3345.00 (NELIGH.E T1) 345/115/13.8KV TRANSFORMER CKT 1
FDNS	09ALL	4	15G	G15_008	FROM->TO	BATTLE CREEK - NORTH NORFOLK 115KV CKT 1	193	193	0.3742	99.7000	HOSKINS - NELIGH.EAST3345.00 345KV CKT 1
FDNS	09NR	4	15G	G15_008	FROM->TO	BLOOMFIELD - GAVINS POINT 115KV CKT 1	120	120	0.17192	103.8590	HOSKINS - NELIGH.EAST3345.00 345KV CKT 1
FDNS	09NR	4	15G	G15_008	FROM->TO	BLOOMFIELD - GAVINS POINT 115KV CKT 1	120	120	0.17192	103.8161	NELIGH.EAST3345.00 (NELIGH.E T1) 345/115/13.8KV TRANSFORMER CKT 1
FDNS	09ALL	4	15SP	G15_008	FROM->TO	PETERSBRG.N7115.00 - PETERSBURG 115KV CKT Z1	137	137	0.07192	103.5479	BASE CASE
FDNSLock-Blown up	06ALL	0	15G	G15_009		Non-Converged Contingency	0	0	1.17306	-	SPP-SWPS-06
FDNSLock-Blown up	06ALL	0	15G	G15_009		Non-Converged Contingency	0	0	0.31425	-	SPSCONT-02X
FDNSLock-Blown up	06ALL	0	15G	G15_009		Non-Converged Contingency	319	351	0.24799	-	AMOCO SWITCHING STATION - SUNDOWN INTERCHANGE 230KV CKT 1
FDNSLock-Blown up	06ALL	0	15G	G15_009		Non-Converged Contingency	319	351	0.24799	-	AMOCO SWITCHING STATION - YOAKUM COUNTY INTERCHANGE 230KV CKT 1
FDNSLock-Blown up	06ALL	0	15G	G15_009		Non-Converged Contingency	717	926	0.23461	-	CROSSROADS 345.00 - TOLK STATION 345KV CKT 1
FDNSLock-Blown up	06ALL	0	15G	G15_009		Non-Converged Contingency	560	560	0.23461	-	TOLK STATION (ABBXNL844501) 345/230/13.2KV TRANSFORMER CKT 1
FDNSLock-Blown up	06ALL	0	15G	G15_009		Non-Converged Contingency	319	351	0.21084	-	LUBBOCK SOUTH INTERCHANGE - WOLFFORTH INTERCHANGE 230KV CKT 1
FDNSLock-Blown up	06ALL	0	15G	G15_009		Non-Converged Contingency	319	351	0.20054	-	SUNDOWN INTERCHANGE - WOLFFORTH INTERCHANGE 230KV CKT 1
FDNSLock-Blown up	06ALL	0	15G	G15_009		Non-Converged Contingency	956	994	0.19098	-	G14-074T 345.00 - OKLAUNION 345KV CKT 1
FDNSLock-Blown up	06ALL	0	15G	G15_009		Non-Converged Contingency	956	994	0.19098	-	G14-074T 345.00 - TUCO INTERCHANGE 345KV CKT 1
FDNSLock-Blown up	06ALL	0	15G	G15_009		Non-Converged Contingency	956	994	0.19098	-	OKLAUNION 345KV SWITCHED SHUNT
FDNSLock-Blown up	06ALL	0	15G	G15_009		Non-Converged Contingency	0	0	0.19033	-	SPSCONT-05AX
FDNSLock-Blown up	06ALL	0	15G	G15_009		Non-Converged Contingency	0	0	0.18016	-	SPP-SWPS-T14
FDNSLock-Blown up	06ALL	0	15G	G15_009		Non-Converged Contingency	560	560	0.17945	-	TUCO INTERCHANGE (GE M1022338) 345/230/13.2KV TRANSFORMER CKT 1
FDNSLock-Blown up	06ALL	0	15G	G15_009		Non-Converged Contingency	478	502	0.17673	-	NEWHART 230 - PLANT X STATION 230KV CKT 1
FDNSLock-Blown up	06ALL	0	15G	G15_009		Non-Converged Contingency	478	502	0.17544	-	TOLK STATION EAST - TUCO INTERCHANGE 230KV CKT 1
FDNSLock-Blown up	06ALL	0	15G	G15_009		Non-Converged Contingency	1195	1195	0.17137	-	GRACEMONT - MINCO 345KV CKT 1
FDNSLock-Blown up	06ALL	0	15G	G15_009		Non-Converged Contingency	956	1052	0.15713	-	G14_038T 345.00 - Hitchland Interchange 345KV CKT 1
FDNSLock-Blown up	06ALL	0	15G	G15_009		Non-Converged Contingency	956	1052	0.15713	-	G14_038T 345.00 - POTTER COUNTY INTERCHANGE 345KV CKT 1
FDNSLock-Blown up	06ALL	0	15G	G15_009		Non-Converged Contingency	560	560	0.15713	-	POTTER COUNTY INTERCHANGE (WAUK 90343-A) 345/230/13.2KV TRANSFORMER CKT 1
FDNSLock-Blown up	06ALL	0	15G	G15_009		Non-Converged Contingency	319	351	0.15692	-	G13_027T 230.00 - TOLK STATION WEST 230KV CKT 1
FDNSLock-Blown up	06ALL	0	15G	G15_009		Non-Converged Contingency	560	644	0.15638	-	TUCO INTERCHANGE (SIEM 8743066) 345/230/13.2KV TRANSFORMER CKT 2
FDNSLock-Blown up	06ALL	0	15G	G15_009		Non-Converged Contingency	560	560	0.15417	-	TUCO_2 345.00 (TUCO_2 XFMR) 345/230/13.2KV TRANSFORMER CKT 1
FDNSLock-Blown up	06ALL	0	15G	G15_009		Non-Converged Contingency	1330	1940	0.15338	-	CHISHOLM7 345.00 - GRACEMONT 345KV CKT 1
FDNSLock-Blown up	06ALL	0	15G	G15_009		Non-Converged Contingency	319	351	0.15225	-	BUSHLAND INTERCHANGE - DEAF SMITH COUNTY INTERCHANGE 230KV CKT 1
FDNSLock-Blown up	06ALL	0	15G	G15_009		Non-Converged Contingency	319	351	0.15225	-	BUSHLAND INTERCHANGE 230KV SWITCHED SHUNT

SOLUTION	GROUP	SCENARIO	SEASON	SOURCE	DIRECTION	MONITORED ELEMENT	RATEA (MVA)	RATEB(MVA)	TDF	TC%LOADING (% MVA)	CONTINGENCY
FDNSLock-Blown up	06ALL	0	15G	G15_009		Non-Converged Contingency	1792	1792	0.14967	-	CHISHOLM7 345.00 - WOODWARD DISTRICT EHV 345KV CKT 1
FDNSLock-Blown up	06ALL	0	15G	G15_009		Non-Converged Contingency	1792	1792	0.14952	-	BORDER 7345.00 - CHISHOLM7 345.00 345KV CKT 2
FDNSLock-Blown up	06ALL	0	15G	G15_009		Non-Converged Contingency	1792	1792	0.14951	-	BORDER 7345.00 - CHISHOLM7 345.00 345KV CKT 1
FDNSLock-Blown up	06ALL	0	15G	G15_009		Non-Converged Contingency	1420	1775	0.14951	-	BORDER 7345.00 - TUCO_2 345.00 345KV CKT 1
FDNSLock-Blown up	06ALL	0	15G	G15_009		Non-Converged Contingency	1420	1775	0.14951	-	BORDER 7345.00 - TUCO_2 345.00 345KV CKT 2
FDNSLock-Blown up	06ALL	0	15G	G15_009		Non-Converged Contingency	478	502	0.14621	-	JONES STATION - TUCO INTERCHANGE 230KV CKT 1
FDNSLock-Blown up	06ALL	0	15G	G15_009		Non-Converged Contingency	1420	1775	0.14485	-	TUCO INTERCHANGE - TUCO_2 345.00 345KV CKT 1
FDNSLock-Blown up	06ALL	0	15G	G15_009		Non-Converged Contingency	478	478	0.13978	-	DEAF SMITH COUNTY INTERCHANGE - G14-068T 230.00 230KV CKT 1
FDNSLock-Blown up	06ALL	0	15G	G15_009		Non-Converged Contingency	478	478	0.13978	-	G14-068T 230.00 - PLANT X STATION 230KV CKT 1
FDNSLock-Blown up	06ALL	0	15G	G15_009		Non-Converged Contingency	478	502	0.13858	-	TUCO INTERCHANGE - TUCO_2 230.00 230KV CKT 1
FDNSLock-Blown up	06ALL	0	15G	G15_009		Non-Converged Contingency	319	351	0.13411	-	BUSHLAND INTERCHANGE - POTTER COUNTY INTERCHANGE 230KV CKT 1
FDNSLock-Blown up	06ALL	0	15G	G15_009		Non-Converged Contingency	0	0	0.12846	-	SPP-SWPS-T59
FDNSLock-Blown up	06ALL	0	15G	G15_009		Non-Converged Contingency	0	0	0.12509	-	SPP-SWPS-02
FDNSLock-Blown up	06ALL	0	15G	G15_009		Non-Converged Contingency	956	1052	0.12313	-	FINNEY SWITCHING STATION - Hitchland Interchange 345KV CKT 1
FDNSLock-Blown up	06ALL	0	15G	G15_009		Non-Converged Contingency	956	1052	0.12313	-	FINNEY SWITCHING STATION - HOLCOMB 345KV CKT 1
FDNSLock-Blown up	06ALL	0	15G	G15_009		Non-Converged Contingency	0	0	0.12313	-	SPP-SWPS-05
FDNSLock-Blown up	06ALL	0	15G	G15_009		Non-Converged Contingency	319	351	0.12264	-	CHAVES COUNTY INTERCHANGE - SAN JUAN MESA TAP 230KV CKT 1
FDNSLock-Blown up	06ALL	0	15G	G15_009		Non-Converged Contingency	0	0	0.11802	-	SPP-SWPS-03
FDNSLock-Blown up	06ALL	0	15G	G15_009		Non-Converged Contingency	478	502	0.11207	-	NEWHART 230 - POTTER COUNTY INTERCHANGE 230KV CKT 1
FDNSLock-Blown up	06ALL	0	15G	G15_009		Non-Converged Contingency	218	239	0.09944	-	WOLFFORTH INTERCHANGE - YUMA INTERCHANGE 115KV CKT 1
FDNSLock-Blown up	06ALL	0	15G	G15_009		Non-Converged Contingency	1420	1775	0.09516	-	G11_051T 345.00 - TATONGA7 345.00 345KV CKT 1
FDNSLock-Blown up	06ALL	0	15G	G15_009		Non-Converged Contingency	1420	1775	0.09516	-	G11_051T 345.00 - WOODWARD DISTRICT EHV 345KV CKT 1
FDNSLock-Blown up	06ALL	0	15G	G15_009		Non-Converged Contingency	1195	1195	0.09516	-	NORTHWEST - TATONGA7 345.00 345KV CKT 1
FDNSLock-Blown up	06ALL	0	15G	G15_009		Non-Converged Contingency	0	0	0.09516	-	SPSCONT-04
FDNSLock-Blown up	06ALL	0	15G	G15_009		Non-Converged Contingency	0	0	0.09516	-	SPSCONT-05B
FDNSLock-Blown up	06ALL	0	15G	G15_009		Non-Converged Contingency	319	351	0.08301	-	AMARILLO SOUTH INTERCHANGE - SWISHER COUNTY INTERCHANGE 230KV CKT 1
FDNSLock-Blown up	06ALL	0	15G	G15_009		Non-Converged Contingency	0	0	0.07826	-	SPP-SWPS-V49
FDNSLock-Blown up	06ALL	0	15G	G15_009		Non-Converged Contingency	1420	1775	0.0782	-	G11-14T 345.00 - WOODWARD DISTRICT EHV 345KV CKT 1
FDNSLock-Blown up	06ALL	0	15G	G15_009		Non-Converged Contingency	1420	1775	0.0782	-	G11-14T 345.00 - WOODWARD DISTRICT EHV 345KV CKT 2
FDNSLock-Blown up	06ALL	0	15G	G15_009		Non-Converged Contingency	478	502	0.06598	-	HITCHLAND INTERCHANGE - MOORE COUNTY INTERCHANGE 230KV CKT 1
FDNSLock-Blown up	06ALL	0	15G	G15_009		Non-Converged Contingency	478	502	0.06598	-	HITCHLAND INTERCHANGE - MOORE COUNTY INTERCHANGE 230KV CKT 1
FDNSLock-Blown up	06ALL	0	15G	G15_009		Non-Converged Contingency	319	351	0.06511	-	CARLISLE INTERCHANGE - TUCO INTERCHANGE 230KV CKT 1
FDNSLock-Blown up	06ALL	0	15G	G15_009		Non-Converged Contingency	439	439	0.06255	-	CHISHOLM6 230.00 - SWEETWATER 230KV CKT 1
FDNSLock-Blown up	06ALL	0	15G	G15_009		Non-Converged Contingency	319	351	0.06255	-	GRAPEVINE INTERCHANGE - STATELINE INTERCHANGE 230KV CKT 1
FDNSLock-Blown up	06ALL	0	15G	G15_009		Non-Converged Contingency	349	395	0.06255	-	STATELINE INTERCHANGE - STLN-DEMARC6 230KV CKT 1
FDNSLock-Blown up	06ALL	0	15G	G15_009		Non-Converged Contingency	396	441	0.06255	-	STLN-DEMARC6 - SWEETWATER 230KV CKT 1
FDNSLock-Blown up	06ALL	0	15G	G15_009		Non-Converged Contingency	439	439	0.05852	-	CHISHOLM6 230.00 - ELK CITY 230KV 230KV CKT 1
FDNSLock-Blown up	06ALL	0	15G	G15_009		Non-Converged Contingency	287	316	0.05852	-	ELK CITY 230KV (ELKCTY-6) 230/138/13.8KV TRANSFORMER CKT 1
FDNSLock-Blown up	06ALL	0	15G	G15_009		Non-Converged Contingency	319	351	0.05785	-	MOORE COUNTY INTERCHANGE - POTTER COUNTY INTERCHANGE 230KV CKT 1
FDNSLock-Blown up	06ALL	0	15G	G15_009		Non-Converged Contingency	319	351	0.05785	-	MOORE COUNTY INTERCHANGE - POTTER COUNTY INTERCHANGE 230KV CKT 1
FDNSLock-Blown up	06ALL	0	15G	G15_009		Non-Converged Contingency	1413	1517	0.05723	-	BUCKNER7 345.00 - SPEARVILLE 345KV CKT 1
FDNSLock-Blown up	06ALL	0	15G	G15_009		Non-Converged Contingency	319	351	0.05548	-	GRAPEVINE INTERCHANGE - NICHOLS STATION 230KV CKT 1
FDNSLock-Blown up	06ALL	0	15G	G15_009		Non-Converged Contingency	96	96	0.03211	-	CARGILL SUB - DEAF SMITH REC-#24 115KV CKT 1
FDNSLock-Blown up	06ALL	0	15G	G15_009		Non-Converged Contingency	96	96	0.03211	-	CURRY COUNTY INTERCHANGE - DEAF SMITH REC-#20 115KV CKT 1
FDNSLock-Blown up	06ALL	0	15G	G15_009		Non-Converged Contingency	96	96	0.03211	-	DEAF SMITH REC-#20 - PARMER COUNTY SUB 115KV CKT 1
FDNSLock-Blown up	06ALL	0	15G	G15_009		Non-Converged Contingency	96	96	0.03211	-	DEAF SMITH REC-#24 - PARMER COUNTY SUB 115KV CKT 1
FDNSLock-Blown up	06ALL	0	15SP	G15_009		Non-Converged Contingency	0	0	0.32692	-	SPSCONT-02X
FDNSLock-Blown up	06ALL	0	15SP	G15_009		Non-Converged Contingency	956	994	0.19722	-	G14-074T 345.00 - OKLAUNION 345KV CKT 1
FDNSLock-Blown up	06ALL	0	15SP	G15_009		Non-Converged Contingency	956	994	0.19722	-	G14-074T 345.00 - TUCO INTERCHANGE 345KV CKT 1
FDNSLock-Blown up	06ALL	0	15SP	G15_009		Non-Converged Contingency	956	1052	0.16346	-	G14_038T 345.00 - Hitchland Interchange 345KV CKT 1
FDNSLock-Blown up	06ALL	0	15SP	G15_009		Non-Converged Contingency	1420	1775	0.15355	-	BORDER 7345.00 - TUCO_2 345.00 345KV CKT 1
FDNSLock-Blown up	06ALL	0	15SP	G15_009		Non-Converged Contingency	1420	1775	0.15355	-	BORDER 7345.00 - TUCO_2 345.00 345KV CKT 2
FDNSLock-Blown up	06ALL	0	15SP	G15_009		Non-Converged Contingency	478	478	0.14059	-	G14-068T 230.00 - PLANT X STATION 230KV CKT 1
FDNSLock-Blown up	06ALL	0	15WP	G15_009		Non-Converged Contingency	1033	1071	0.2023	-	G14-074T 345.00 - OKLAUNION 345KV CKT 1
FDNSLock-Blown up	06ALL	0	20SP	G15_009		Non-Converged Contingency	956	994	0.27545	-	G14-074T 345.00 - OKLAUNION 345KV CKT 1
FDNSLock-Blown up	06ALL	0	20WP	G15_009		Non-Converged Contingency	0	0	0.30466	-	SPSCONT-02X
FDNSLock-Blown up	06ALL	0	20WP	G15_009		Non-Converged Contingency	1033	1071	0.27244	-	G14-074T 345.00 - OKLAUNION 345KV CKT 1
FDNSLock-Blown up	06ALL	0	20WP	G15_009		Non-Converged Contingency	1033	1071	0.27244	-	G14-074T 345.00 - TUCO INTERCHANGE 345KV CKT 1
FDNSLock-Blown up	06ALL	0	20WP	G15_009		Non-Converged Contingency	1420	1775	0.21046	-	BORDER 7345.00 - TUCO_2 345.00 345KV CKT 1
FDNSLock-Blown up	06ALL	0	20WP	G15_009		Non-Converged Contingency	1792	1792	0.21046	-	BORDER 7345.00 - WOODWARD DISTRICT EHV 345KV CKT 1
FDNSLock-Blown up	06ALL	0	20WP	G15_009		Non-Converged Contingency	956	1052	0.15233	-	G14_038T 345.00 - Hitchland Interchange 345KV CKT 1
FDNSLock-Blown up	06ALL	2	15G	G15_009		Non-Converged Contingency	0	0	0.27577	-	SPSCONT-02X
FDNSLock-Blown up	06ALL	2	15G	G15_009		Non-Converged Contingency	956	994	0.20963	-	G14-074T 345.00 - OKLAUNION 345KV CKT 1
FDNSLock-Blown up	06ALL	2	15G	G15_009		Non-Converged Contingency	956	994	0.20963	-	G14-074T 345.00 - TUCO INTERCHANGE 345KV CKT 1
FDNSLock-Blown up	06ALL	2	15G	G15_009		Non-Converged Contingency	1420	1775	0.16849	-	BORDER 7345.00 - TUCO_2 345.00 345KV CKT 1
FDNSLock-Blown up	06ALL	2	15G	G15_009		Non-Converged Contingency	1420	1775	0.16849	-	BORDER 7345.00 - TUCO_2 345.00 345KV CKT 2
FDNSLock-Blown up	06ALL	2	15G	G15_009		Non-Converged Contingency	956	1052	0.13788	-	G14_038T 345.00 - Hitchland Interchange 345KV CKT 1
FDNSLock-Blown up	06ALL	2	15G	G15_009		Non-Converged Contingency	956	1052	0.13788	-	G14_038T 345.00 - POTTER COUNTY INTERCHANGE 345KV CKT 1
FDNSLock-Blown up	06ALL	2	15G	G15_009		Non-Converged Contingency	560	560	0.13788	-	POTTER COUNTY INTERCHANGE (WAUK 90343-A) 345/230/13.2KV TRANSFORMER CKT 1
FDNSLock-Blown up	06ALL	2	15SP	G15_009		Non-Converged Contingency	956	994	0.2154	-	G14-074T 345.00 - OKLAUNION 345KV CKT 1
FDNSLock-Blown up	06ALL	2	15WP	G15_009		Non-Converged Contingency	1033	1071	0.22047	-	G14-074T 345.00 - OKLAUNION 345KV CKT 1
FDNSLock-Blown up	06ALL	3	15G	G15_009		Non-Converged Contingency	0	0	0.37295	-	SPSCONT-02X
FDNSLock-Blown up	06ALL	3	15G	G15_009		Non-Converged Contingency	956	994	0.19343	-	G14-074T 345.00 - OKLAUNION 345KV CKT 1
FDNSLock-Blown up	06ALL	3	15G	G15_009		Non-Converged Contingency	956	1052	0.18647	-	G14_038T 345.00 - Hitchland Interchange 345KV CKT 1
FDNSLock-Blown up	06ALL	3	15G	G15_009		Non-Converged Contingency	956	1052	0.18647	-	G14_038T 345.00 - POTTER COUNTY INTERCHANGE 345KV CKT 1

SOLUTION	GROUP	SCENARIO	SEASON	SOURCE	DIRECTION	MONITORED ELEMENT	RATEA (MVA)	RATEB(MVA)	TDF	TC%LOADING (% MVA)	CONTINGENCY
FDNS	06ALL	0	15G	G15_009	TO->FROM	AMOCO SWITCHING STATION - YOAKUM COUNTY INTERCHANGE 230KV CKT 1	319	351	0.26315	110.8847	COCHRAN INTERCHANGE - G15-014T 115.00 115KV CKT 1
FDNS	06ALL	0	15G	G15_009	TO->FROM	AMOCO SWITCHING STATION - YOAKUM COUNTY INTERCHANGE 230KV CKT 1	319	351	0.27857	107.2145	TERRY COUNTY INTERCHANGE - WOLFFORTH INTERCHANGE 115KV CKT 1
FDNS	06ALL	0	15G	G15_009	TO->FROM	AMOCO SWITCHING STATION - YOAKUM COUNTY INTERCHANGE 230KV CKT 1	319	351	0.26315	106.7456	COCHRAN INTERCHANGE - PACIFIC SUB 115KV CKT 1
FDNS	06ALL	0	15G	G15_009	TO->FROM	AMOCO SWITCHING STATION - YOAKUM COUNTY INTERCHANGE 230KV CKT 1	319	351	0.26315	106.286	SPP-SWPS-V56
FDNS	06ALL	0	15G	G15_009	TO->FROM	AMOCO SWITCHING STATION - YOAKUM COUNTY INTERCHANGE 230KV CKT 1	319	351	0.26315	105.5437	PACIFIC SUB - SUNDOWN INTERCHANGE 115KV CKT 1
FDNS	06ALL	0	15G	G15_009	TO->FROM	AMOCO SWITCHING STATION - YOAKUM COUNTY INTERCHANGE 230KV CKT 1	319	351	0.27009	105.2484	OASIS INTERCHANGE - SAN JUAN MESA TAP 230KV CKT 1
FDNS	06ALL	0	15G	G15_009	TO->FROM	AMOCO SWITCHING STATION - YOAKUM COUNTY INTERCHANGE 230KV CKT 1	319	351	0.24799	104.8902	BASE CASE
FDNS	06ALL	0	15G	G15_009	TO->FROM	AMOCO SWITCHING STATION - YOAKUM COUNTY INTERCHANGE 230KV CKT 1	319	351	0.31934	103.8708	G13_027T 230.00 - YOAKUM COUNTY INTERCHANGE 230KV CKT 1
FDNS	06NR	0	15G	G15_009	TO->FROM	AMOCO SWITCHING STATION - YOAKUM COUNTY INTERCHANGE 230KV CKT 1	319	351	0.19843	103.6651	G13_027T 230.00 - TOLK STATION WEST 230KV CKT 1
FDNS	06ALL	0	15G	G15_009	TO->FROM	AMOCO SWITCHING STATION - YOAKUM COUNTY INTERCHANGE 230KV CKT 1	319	351	0.26343	101.6798	DENVER CITY INTERCHANGE N. - TERRY COUNTY INTERCHANGE 115KV CKT 1
FDNS	06NR	0	15G	G15_009	TO->FROM	AMOCO SWITCHING STATION - YOAKUM COUNTY INTERCHANGE 230KV CKT 1	319	351	0.19674	101.118	CROSSROADS 345.00 - TOLK STATION 345KV CKT 1
FDNS	06NR	0	15G	G15_009	TO->FROM	AMOCO SWITCHING STATION - YOAKUM COUNTY INTERCHANGE 230KV CKT 1	319	351	0.19674	100.8639	TOLK STATION (ABBXNL844501) 345/230/13.2KV TRANSFORMER CKT 1
FDNS	06ALL	0	15SP	G15_009	TO->FROM	AMOCO SWITCHING STATION - YOAKUM COUNTY INTERCHANGE 230KV CKT 1	319	351	0.32664	100.4989	G13_027T 230.00 - TOLK STATION WEST 230KV CKT 1
FDNS	06ALL	0	15G	G15_009	TO->FROM	AMOCO SWITCHING STATION - YOAKUM COUNTY INTERCHANGE 230KV CKT 1	319	351	0.25574	100.2933	SEAGRAVES INTERCHANGE - SULPHUR INTERCHANGE 115KV CKT 1
FDNS	06ALL	0	15SP	G15_009	TO->FROM	AMOCO SWITCHING STATION - YOAKUM COUNTY INTERCHANGE 230KV CKT 1	319	351	0.31014	100	CROSSROADS 345.00 - TOLK STATION 345KV CKT 1
FDNS	06ALL	0	15SP	G15_009	TO->FROM	AMOCO SWITCHING STATION - YOAKUM COUNTY INTERCHANGE 230KV CKT 1	319	351	0.31014	100	TOLK STATION (ABBXNL844501) 345/230/13.2KV TRANSFORMER CKT 1
FDNS	06ALL	0	15G	G15_009	TO->FROM	AMOCO SWITCHING STATION - YOAKUM COUNTY INTERCHANGE 230KV CKT 1	319	351	0.25566	99.9	SPP-SWPS-T35
FDNS	06ALL	0	15G	G15_009	TO->FROM	AMOCO SWITCHING STATION - YOAKUM COUNTY INTERCHANGE 230KV CKT 1	319	351	0.25566	99.8	PRENTICE SUB - YOAKUM COUNTY INTERCHANGE 115KV CKT 1
FDNS	06ALL	0	15G	G15_009	TO->FROM	AMOCO SWITCHING STATION - YOAKUM COUNTY INTERCHANGE 230KV CKT 1	319	351	0.2179	99.5	PLANT X STATION - SUNDOWN INTERCHANGE 230KV CKT 1
FDNS	06NR	0	15G	G15_009	FROM->TO	BUSHLAND INTERCHANGE - HILLSIDE 115KV CKT 1	159	160	0.04852	107.93	BUSHLAND INTERCHANGE - POTTER COUNTY INTERCHANGE 230KV CKT 1
FDNS	06NR	0	15G	G15_009	FROM->TO	BUSHLAND INTERCHANGE (WH 7001795) 230/115/13.2KV TRANSFORMER CKT 1	168	168	0.04852	107.6681	BUSHLAND INTERCHANGE - POTTER COUNTY INTERCHANGE 230KV CKT 1
FDNS	06NR	0	15G	G15_009	FROM->TO	BUSHLAND INTERCHANGE (WH 7001795) 230/115/13.2KV TRANSFORMER CKT 1	168	168	0.04852	105.1644	BUSHLAND INTERCHANGE - POTTER COUNTY INTERCHANGE 230KV CKT 1
FDNS	00NR	0	15WP	G15_009	FROM->TO	BUSHLAND INTERCHANGE (WH 7001795) 230/115/13.2KV TRANSFORMER CKT 1	168	168	0.04515	103.7121	BUSHLAND INTERCHANGE - POTTER COUNTY INTERCHANGE 230KV CKT 1
FDNS	00NR	0	15WP	G15_009	FROM->TO	BUSHLAND INTERCHANGE (WH 7001795) 230/115/13.2KV TRANSFORMER CKT 1	168	168	0.04515	101.6436	BUSHLAND INTERCHANGE - POTTER COUNTY INTERCHANGE 230KV CKT 1
FDNS	06NR	0	15G	G15_009	TO->FROM	CANYON E_TP3115.00 - CANYON WEST SUB 115KV CKT 1	96	96	0.04146	109.4993	BUSHLAND INTERCHANGE - DEAF SMITH COUNTY INTERCHANGE 230KV CKT 1
FDNS	06NR	0	15G	G15_009	FROM->TO	CANYON E_TP3115.00 - OSAGE SWITCHING STATION 115KV CKT 1	96	96	0.04146	99.5	BUSHLAND INTERCHANGE - DEAF SMITH COUNTY INTERCHANGE 230KV CKT 1
FDNS	06NR	0	15G	G15_009	TO->FROM	CANYON WEST SUB - DAWN SUB 115KV CKT 1	96	96	0.04146	120.1946	BUSHLAND INTERCHANGE - DEAF SMITH COUNTY INTERCHANGE 230KV CKT 1
FDNS	06NR	0	15G	G15_009	TO->FROM	CARGILL SUB - DEAF SMITH REC-#24 115KV CKT 1	96	96	0.0323	134.6418	DEAF SMITH COUNTY INTERCHANGE - G14-068T 230.00 230KV CKT 1
FDNS	06NR	0	15G	G15_009	TO->FROM	CARGILL SUB - DEAF SMITH REC-#24 115KV CKT 1	96	96	0.0323	128.943	G14-068T 230.00 - PLANT X STATION 230KV CKT 1
FDNS	06ALL	0	15G	G15_009	TO->FROM	CARGILL SUB - DEAF SMITH REC-#24 115KV CKT 1	96	96	0.03211	105.5446	BASE CASE
FDNS	06ALL	0	15SP	G15_009	TO->FROM	CARGILL SUB - DEAF SMITH REC-#24 115KV CKT 1	96	96	0.03233	101.5046	BASE CASE
FDNS	06NR	0	15G	G15_009	FROM->TO	CARGILL SUB - FRIONA SUB 115KV CKT 1	96	96	0.0323	128.3771	DEAF SMITH COUNTY INTERCHANGE - G14-068T 230.00 230KV CKT 1
FDNS	06NR	0	15G	G15_009	FROM->TO	CARGILL SUB - FRIONA SUB 115KV CKT 1	96	96	0.0323	123.2237	G14-068T 230.00 - PLANT X STATION 230KV CKT 1
FDNS	06NR	0	15G	G15_009	TO->FROM	CARLISLE INTERCHANGE - LP-DOUD_TP 3115.00 115KV CKT 1	159	160	0.11057	120.5692	LUBBOCK SOUTH INTERCHANGE - WOLFFORTH INTERCHANGE 230KV CKT 1
FDNS	06NR	0	15G	G15_009	TO->FROM	COULTER INTERCHANGE - HILLSIDE 115KV CKT 1	139	160	0.04852	99.7	BUSHLAND INTERCHANGE - POTTER COUNTY INTERCHANGE 230KV CKT 1
FDNS	00NR	0	15SP	G15_009	FROM->TO	CUNNINGHAM STATION - MADDOX STATION 115KV CKT 1	160	160	0.06242	120.8563	HOBBS INTERCHANGE - MADDOX STATION 115KV CKT 1
FDNS	00NR	0	25SP	G15_009	FROM->TO	CUNNINGHAM STATION - POTASH JUNCTION INTERCHANGE 230KV CKT 1	319	351	0.0683	101.0941	HOBBS - KIOWA 7345.00 345KV CKT 1
FDNS	06NR	0	15G	G15_009	FROM->TO	CURRY COUNTY INTERCHANGE - DEAF SMITH REC-#20 115KV CKT 1	96	96	0.0323	158.0448	DEAF SMITH COUNTY INTERCHANGE - G14-068T 230.00 230KV CKT 1
FDNS	06NR	0	15G	G15_009	FROM->TO	CURRY COUNTY INTERCHANGE - DEAF SMITH REC-#20 115KV CKT 1	96	96	0.0323	152.3417	G14-068T 230.00 - PLANT X STATION 230KV CKT 1
FDNS	06ALL	0	15SP	G15_009	FROM->TO	CURRY COUNTY INTERCHANGE - DEAF SMITH REC-#20 115KV CKT 1	96	96	0.03233	134.4755	BASE CASE
FDNS	06ALL	0	15G	G15_009	FROM->TO	CURRY COUNTY INTERCHANGE - DEAF SMITH REC-#20 115KV CKT 1	96	96	0.03211	128.1788	BASE CASE
FDNS	06NR	0	15G	G15_009	TO->FROM	DAWN SUB - Panda Energy Substation Hereford 115KV CKT 1	96	96	0.04146	123.2022	BUSHLAND INTERCHANGE - DEAF SMITH COUNTY INTERCHANGE 230KV CKT 1
FDNS	06NR	0	15G	G15_009	FROM->TO	DEAF SMITH COUNTY INTERCHANGE - Panda Energy Substation Hereford 115KV CKT 1	96	96	0.04146	127.828	BUSHLAND INTERCHANGE - DEAF SMITH COUNTY INTERCHANGE 230KV CKT 1
FDNS	00NR	0	15WP	G15_009	FROM->TO	DEAF SMITH COUNTY INTERCHANGE - Panda Energy Substation Hereford 115KV CKT 1	106	106	0.03729	102.4385	BUSHLAND INTERCHANGE - DEAF SMITH COUNTY INTERCHANGE 230KV CKT 1
FDNS	06NR	0	15G	G15_009	FROM->TO	DEAF SMITH REC-#20 - PARMER COUNTY SUB 115KV CKT 1	96	96	0.0323	148.9958	DEAF SMITH COUNTY INTERCHANGE - G14-068T 230.00 230KV CKT 1
FDNS	06NR	0	15G	G15_009	FROM->TO	DEAF SMITH REC-#20 - PARMER COUNTY SUB 115KV CKT 1	96	96	0.0323	143.5446	G14-068T 230.00 - PLANT X STATION 230KV CKT 1
FDNS	06ALL	0	15SP	G15_009	FROM->TO	DEAF SMITH REC-#20 - PARMER COUNTY SUB 115KV CKT 1	96	96	0.03233	121.3248	BASE CASE
FDNS	06ALL	0	15G	G15_009	FROM->TO	DEAF SMITH REC-#20 - PARMER COUNTY SUB 115KV CKT 1	96	96	0.03211	119.1935	BASE CASE
FDNS	06NR	0	15G	G15_009	TO->FROM	DEAF SMITH REC-#24 - PARMER COUNTY SUB 115KV CKT 1	96	96	0.0323	142.8032	DEAF SMITH COUNTY INTERCHANGE - G14-068T 230.00 230KV CKT 1
FDNS	06NR	0	15G	G15_009	TO->FROM	DEAF SMITH REC-#24 - PARMER COUNTY SUB 115KV CKT 1	96	96	0.0323	136.8345	G14-068T 230.00 - PLANT X STATION 230KV CKT 1
FDNS	06ALL	0	15G	G15_009	TO->FROM	DEAF SMITH REC-#24 - PARMER COUNTY SUB 115KV CKT 1	96	96	0.03211	113.7704	BASE CASE
FDNS	06ALL	0	15SP	G15_009	TO->FROM	DEAF SMITH REC-#24 - PARMER COUNTY SUB 115KV CKT 1	96	96	0.03233	113.2753	BASE CASE
FDNS	06NR	0	15G	G15_009	TO->FROM	DEAF SMITH REC-#6 - FRIONA SUB 115KV CKT 1	96	96	0.0323	116.908	DEAF SMITH COUNTY INTERCHANGE - G14-068T 230.00 230KV CKT 1
FDNS	06NR	0	15G	G15_009	TO->FROM	DEAF SMITH REC-#6 - FRIONA SUB 115KV CKT 1	96	96	0.0323	112.256	G14-068T 230.00 - PLANT X STATION 230KV CKT 1
FDNS	06NR	0	15G	G15_009	FROM->TO	DEAF SMITH REC-#6 - HEREFORD INTERCHANGE 115KV CKT 1	96	96	0.0323	113.989	DEAF SMITH COUNTY INTERCHANGE - G14-068T 230.00 230KV CKT 1
FDNS	06NR	0	15G	G15_009	FROM->TO	DEAF SMITH REC-#6 - HEREFORD INTERCHANGE 115KV CKT 1	96	96	0.0323	109.5336	G14-068T 230.00 - PLANT X STATION 230KV CKT 1
FDNS	06ALL	0	15SP	G15_009	FROM->TO	ELK CITY 230KV (ELKCTY-6) 230/138/13.8KV TRANSFORMER CKT 1	272	316	0.06351	125.7575	BASE CASE
FDNS	06ALL	0	15SP	G15_009	FROM->TO	ELK CITY 230KV (ELKCTY-6) 230/138/13.8KV TRANSFORMER CKT 1	272	316	0.06351	124.0328	BASE CASE
FDNS	06ALL	0	15G	G15_009	FROM->TO	ELK CITY 230KV (ELKCTY-6) 230/138/13.8KV TRANSFORMER CKT 1	287	316	0.05852	112.017	BASE CASE
FDNS	06ALL	0	15G	G15_009	FROM->TO	ELK CITY 230KV (ELKCTY-6) 230/138/13.8KV TRANSFORMER CKT 1	287	316	0.05852	110.2834	BASE CASE
FDNS	06ALL	0	15WP	G15_009	FROM->TO	ELK CITY 230KV (ELKCTY-6) 230/138/13.8KV TRANSFORMER CKT 1	287	316	0.06534	107.7723	BASE CASE
FDNS	06ALL	0	15WP	G15_009	FROM->TO	ELK CITY 230KV (ELKCTY-6) 230/138/13.8KV TRANSFORMER CKT 1	287	316	0.06534	106.4302	BASE CASE
FDNS	06ALL	0	20WP	G15_009	TO->FROM	GRAPEVINE INTERCHANGE - NICHOLS STATION 230KV CKT 1	329	361	0.07738	121.1428	BASE CASE
FDNS	06ALL	0	15G	G15_009	TO->FROM	GRAPEVINE INTERCHANGE - NICHOLS STATION 230KV CKT 1	319	351	0.05548	105.2692	BASE CASE
FDNS	06ALL	0	20SP	G15_009	TO->FROM	GRAPEVINE INTERCHANGE - NICHOLS STATION 230KV CKT 1	319	351	0.07925	99.5	BASE CASE
FDNS	06NR	0	15G	G15_009	TO->FROM	LP-DOUD_TP 3115.00 - SP-WOLF_TP 3115.00 115KV CKT 1	159	175	0.11057	119.0494	LUBBOCK SOUTH INTERCHANGE - WOLFFORTH INTERCHANGE 230KV CKT 1
FDNS	06ALL	0	15SP	G15_009	TO->FROM	LUBBOCK SOUTH INTERCHANGE - WOLFFORTH INTERCHANGE 230KV CKT 1	319	351	0.26073	115.1095	TOLK STATION EAST - TUCO INTERCHANGE 230KV CKT 1
FDNS	06NR	0	15G	G15_009	TO->FROM	LUBBOCK SOUTH INTERCHANGE - WOLFFORTH INTERCHANGE 230KV CKT 1	319	351	0.16382	110.3247	TOLK STATION EAST - TUCO INTERCHANGE 230KV CKT 1
FDNS	06ALL	0	15G	G15_009	TO->FROM	LUBBOCK SOUTH INTERCHANGE - WOLFFORTH INTERCHANGE 230KV CKT 1	319	351	0.27537	100.9916	SP-WOLF_TP 3115.00 - YUMA INTERCHANGE 115KV CKT 1
FDNS	06ALL	0	15SP	G15_009	TO->FROM	LUBBOCK SOUTH INTERCHANGE - WOLFFORTH INTERCHANGE 230KV CKT 1	319	351	0.27902	99.9	WOLFFORTH INTERCHANGE - YUMA INTERCHANGE 115KV CKT 1
FDNS	06ALL	0	15SP	G15_009	TO->FROM	NEWHART 230 - PLANT X STATION 230KV CKT 1	478	502	0.2233	131.4399	DEAF SMITH COUNTY INTERCHANGE - G14-068T 230.00 230KV CKT 1
FDNS	06ALL	0	15SP	G15_009	TO->FROM	NEWHART 230 - PLANT X STATION 230KV CKT 1	478	502	0.22667	125.803	TOLK STATION EAST - TUCO INTERCHANGE 230KV CKT 1
FDNS	06ALL	0	15SP	G15_009	TO->FROM	NEWHART 230 - PLANT X STATION 230KV CKT 1	478	502	0.21745	112.8584	BUSHLAND INTERCHANGE - DEAF SMITH COUNTY INTERCHANGE 230KV CKT 1
FDNS	06ALL	0	15SP	G15_009	TO->FROM	NEWHART 230 - PLANT X STATION 230KV CKT 1	478	502	0.21286	105.469	SUNDOWN INTERCHANGE - WOLFFORTH INTERCHANGE 230KV CKT 1
FDNS	06ALL	0	15SP	G15_009	TO->FROM	NEWHART 230 - PLANT X STATION 230KV CKT 1	478	502	0.2072	101.3263	LUBBOCK SOUTH INTERCHANGE - WOLFFORTH INTERCHANGE 230KV CKT 1

SOLUTION	GROUP	SCENARIO	SEASON	SOURCE	DIRECTION	MONITORED ELEMENT	RATEA (MVA)	RATEB(MVA)	TDF	TC%LOADING (% MVA)	CONTINGENCY
FDNS	06NR	0	15G	G15_009	TO->FROM	PLANT X STATION - TOLK STATION EAST 230KV CKT 2	478	502	0.03337	117.4765	TOLK STATION TAP - TOLK STATION WEST 230KV CKT @1
FDNS	06NR	0	15G	G15_009	TO->FROM	SP-WOLF_TP 3115.00 - YUMA INTERCHANGE 115KV CKT 1	159	175	0.11057	126.3201	LUBBOCK SOUTH INTERCHANGE - WOLFFORTH INTERCHANGE 230KV CKT 1
FDNS	06ALL	0	15SP	G15_009	FROM->TO	SUNDOWN INTERCHANGE - WOLFFORTH INTERCHANGE 230KV CKT 1	319	351	0.25333	127.2931	TOLK STATION EAST - TUCO INTERCHANGE 230KV CKT 1
FDNS	06NR	0	15G	G15_009	FROM->TO	SUNDOWN INTERCHANGE - WOLFFORTH INTERCHANGE 230KV CKT 1	319	351	0.15053	116.2358	TOLK STATION EAST - TUCO INTERCHANGE 230KV CKT 1
FDNS	06ALL	0	15SP	G15_009	FROM->TO	SUNDOWN INTERCHANGE - WOLFFORTH INTERCHANGE 230KV CKT 1	319	351	0.22959	107.2174	NEWHART 230 - PLANT X STATION 230KV CKT 1
FDNS	06ALL	0	15G	G15_009	FROM->TO	SUNDOWN INTERCHANGE - WOLFFORTH INTERCHANGE 230KV CKT 1	319	351	0.26334	104.1935	TERRY COUNTY INTERCHANGE - WOLFFORTH INTERCHANGE 115KV CKT 1
FDNS	06ALL	0	15SP	G15_009	FROM->TO	SUNDOWN INTERCHANGE - WOLFFORTH INTERCHANGE 230KV CKT 1	319	351	0.26682	100.5801	TERRY COUNTY INTERCHANGE - WOLFFORTH INTERCHANGE 115KV CKT 1
FDNS	06ALL	0	15SP	G15_009	FROM->TO	SUNDOWN INTERCHANGE - WOLFFORTH INTERCHANGE 230KV CKT 1	319	351	0.21784	100.4541	DEAF SMITH COUNTY INTERCHANGE - G14-068T 230.00 230KV CKT 1
FDNS	06NR	0	15G	G15_009	FROM->TO	TERRY COUNTY INTERCHANGE - WOLFFORTH INTERCHANGE 115KV CKT 1	120	154	0.10156	126.6551	SUNDOWN INTERCHANGE - WOLFFORTH INTERCHANGE 230KV CKT 1
FDNS	06ALL	0	15G	G15_009	FROM->TO	TERRY COUNTY INTERCHANGE - WOLFFORTH INTERCHANGE 115KV CKT 1	120	154	0.10974	108.5207	BASE CASE
FDNS	06NR	0	15G	G15_009	FROM->TO	TERRY COUNTY INTERCHANGE - WOLFFORTH INTERCHANGE 115KV CKT 1	120	154	0.08637	103.1804	AMOCO SWITCHING STATION - YOAKUM COUNTY INTERCHANGE 230KV CKT 1
FDNS	06NR	0	15G	G15_009	FROM->TO	TERRY COUNTY INTERCHANGE - WOLFFORTH INTERCHANGE 115KV CKT 1	120	154	0.06978	102.2814	TOLK STATION EAST - TUCO INTERCHANGE 230KV CKT 1
FDNS	06ALL	0	15SP	G15_009	FROM->TO	TOLK STATION EAST - TUCO INTERCHANGE 230KV CKT 1	478	502	0.2211	117.9185	NEWHART 230 - PLANT X STATION 230KV CKT 1
FDNS	06ALL	0	15SP	G15_009	FROM->TO	TOLK STATION EAST - TUCO INTERCHANGE 230KV CKT 1	478	502	0.20206	110.5721	DEAF SMITH COUNTY INTERCHANGE - G14-068T 230.00 230KV CKT 1
FDNS	06ALL	0	15SP	G15_009	FROM->TO	TOLK STATION EAST - TUCO INTERCHANGE 230KV CKT 1	478	502	0.23702	108.8842	SUNDOWN INTERCHANGE - WOLFFORTH INTERCHANGE 230KV CKT 1
FDNS	06ALL	0	15SP	G15_009	FROM->TO	TOLK STATION EAST - TUCO INTERCHANGE 230KV CKT 1	478	502	0.22868	102.2896	LUBBOCK SOUTH INTERCHANGE - WOLFFORTH INTERCHANGE 230KV CKT 1
FDNS	06ALL	0	15SP	G15_009	FROM->TO	TOLK STATION EAST - TUCO INTERCHANGE 230KV CKT 1	478	502	0.204	102.1725	BUSHLAND INTERCHANGE - DEAF SMITH COUNTY INTERCHANGE 230KV CKT 1
FDNS	06NR	0	15G	G15_009	FROM->TO	TOLK STATION EAST - TUCO INTERCHANGE 230KV CKT 1	478	502	0.09694	101.7543	NEWHART 230 - PLANT X STATION 230KV CKT 1
FDNS	06NR	0	15G	G15_009	FROM->TO	TOLK STATION EAST - TUCO INTERCHANGE 230KV CKT 1	478	502	0.07076	99.9	SPSCONT-02X
FDNS	06ALL	0	15SP	G15_009	FROM->TO	TUCO INTERCHANGE - TUCO_2 230.00 230KV CKT 1	478	502	0.26528	171.3069	TUCO INTERCHANGE - TUCO_2 345.00 345KV CKT 1
FDNS	06NR	0	15G	G15_009	FROM->TO	TUCO INTERCHANGE - TUCO_2 230.00 230KV CKT 1	478	502	0.07641	141.1746	TUCO INTERCHANGE - TUCO_2 345.00 345KV CKT 1
FDNS	06ALL	0	15WP	G15_009	FROM->TO	TUCO INTERCHANGE - TUCO_2 230.00 230KV CKT 1	557	557	0.27183	134.3573	TUCO INTERCHANGE - TUCO_2 345.00 345KV CKT 1
FDNS	06ALL	0	15SP	G15_009	FROM->TO	TUCO INTERCHANGE - TUCO_2 230.00 230KV CKT 1	478	502	0.22522	117.2904	TUCO INTERCHANGE (GE M1022338) 345/230/13.2KV TRANSFORMER CKT 1
FDNS	06NR	0	15G	G15_009	FROM->TO	TUCO INTERCHANGE - TUCO_2 230.00 230KV CKT 1	478	502	0.06237	111.7725	TUCO INTERCHANGE (GE M1022338) 345/230/13.2KV TRANSFORMER CKT 1
FDNS	06ALL	0	15SP	G15_009	FROM->TO	TUCO INTERCHANGE - TUCO_2 230.00 230KV CKT 1	478	502	0.20949	109.6173	TUCO INTERCHANGE (SIEM 8743066) 345/230/13.2KV TRANSFORMER CKT 2
FDNS	06ALL	0	15WP	G15_009	FROM->TO	TUCO INTERCHANGE - TUCO_2 230.00 230KV CKT 1	557	557	0.2309	104.677	TUCO INTERCHANGE (GE M1022338) 345/230/13.2KV TRANSFORMER CKT 1
FDNS	06NR	0	15G	G15_009	FROM->TO	TUCO INTERCHANGE - TUCO_2 230.00 230KV CKT 1	478	502	0.0596	103.588	TUCO INTERCHANGE (SIEM 8743066) 345/230/13.2KV TRANSFORMER CKT 2
FDNS	06ALL	0	20SP	G15_009	FROM->TO	TUCO INTERCHANGE - TUCO_2 230.00 230KV CKT 1	478	502	0.26056	101.2947	TUCO INTERCHANGE - TUCO_2 345.00 345KV CKT 1
FDNS	06ALL	0	15WP	G15_009	FROM->TO	TUCO INTERCHANGE (GE M1022338) 345/230/13.2KV TRANSFORMER CKT 1	560	560	0.27735	123.6189	TUCO INTERCHANGE (SIEM 8743066) 345/230/13.2KV TRANSFORMER CKT 2
FDNS	06ALL	0	15WP	G15_009	FROM->TO	TUCO INTERCHANGE (GE M1022338) 345/230/13.2KV TRANSFORMER CKT 1	560	560	0.27735	121.7966	TUCO INTERCHANGE (SIEM 8743066) 345/230/13.2KV TRANSFORMER CKT 2
FDNS	06NR	0	15G	G15_009	FROM->TO	TUCO INTERCHANGE (GE M1022338) 345/230/13.2KV TRANSFORMER CKT 1	560	560	0.04765	120.8599	TUCO INTERCHANGE (SIEM 8743066) 345/230/13.2KV TRANSFORMER CKT 2
FDNS	06ALL	0	15WP	G15_009	FROM->TO	TUCO INTERCHANGE (GE M1022338) 345/230/13.2KV TRANSFORMER CKT 1	560	560	0.26979	120.4848	TUCO_2 345.00 (TUCO_2 XFMR) 345/230/13.2KV TRANSFORMER CKT 1
FDNS	06NR	0	15G	G15_009	FROM->TO	TUCO INTERCHANGE (GE M1022338) 345/230/13.2KV TRANSFORMER CKT 1	560	560	0.04765	119.1697	TUCO INTERCHANGE (SIEM 8743066) 345/230/13.2KV TRANSFORMER CKT 2
FDNS	06ALL	0	15WP	G15_009	FROM->TO	TUCO INTERCHANGE (GE M1022338) 345/230/13.2KV TRANSFORMER CKT 1	560	560	0.26979	118.8811	TUCO_2 345.00 (TUCO_2 XFMR) 345/230/13.2KV TRANSFORMER CKT 1
FDNS	06NR	0	15G	G15_009	FROM->TO	TUCO INTERCHANGE (GE M1022338) 345/230/13.2KV TRANSFORMER CKT 1	560	560	0.0439	117.9266	TUCO_2 345.00 (TUCO_2 XFMR) 345/230/13.2KV TRANSFORMER CKT 1
FDNS	06NR	0	15G	G15_009	FROM->TO	TUCO INTERCHANGE (GE M1022338) 345/230/13.2KV TRANSFORMER CKT 1	560	560	0.0439	116.4942	TUCO_2 345.00 (TUCO_2 XFMR) 345/230/13.2KV TRANSFORMER CKT 1
FDNS	06ALL	0	15SP	G15_009	FROM->TO	TUCO INTERCHANGE (GE M1022338) 345/230/13.2KV TRANSFORMER CKT 1	560	560	0.27061	113.3311	TUCO INTERCHANGE (SIEM 8743066) 345/230/13.2KV TRANSFORMER CKT 2
FDNS	06ALL	0	15WP	G15_009	FROM->TO	TUCO INTERCHANGE (GE M1022338) 345/230/13.2KV TRANSFORMER CKT 1	560	560	0.25405	112.9697	TUCO INTERCHANGE - TUCO_2 230.00 230KV CKT 1
FDNS	06ALL	0	15WP	G15_009	FROM->TO	TUCO INTERCHANGE (GE M1022338) 345/230/13.2KV TRANSFORMER CKT 1	560	560	0.25405	111.3776	TUCO INTERCHANGE - TUCO_2 230.00 230KV CKT 1
FDNS	06ALL	0	15SP	G15_009	FROM->TO	TUCO INTERCHANGE (GE M1022338) 345/230/13.2KV TRANSFORMER CKT 1	560	560	0.27061	111.3719	TUCO INTERCHANGE (SIEM 8743066) 345/230/13.2KV TRANSFORMER CKT 2
FDNS	06ALL	0	15SP	G15_009	FROM->TO	TUCO INTERCHANGE (GE M1022338) 345/230/13.2KV TRANSFORMER CKT 1	560	560	0.26324	110.0342	TUCO_2 345.00 (TUCO_2 XFMR) 345/230/13.2KV TRANSFORMER CKT 1
FDNS	06NR	0	15G	G15_009	FROM->TO	TUCO INTERCHANGE (GE M1022338) 345/230/13.2KV TRANSFORMER CKT 1	560	560	0.05378	109.7142	TUCO INTERCHANGE - TUCO_2 230.00 230KV CKT 1
FDNS	06ALL	0	15SP	G15_009	FROM->TO	TUCO INTERCHANGE (GE M1022338) 345/230/13.2KV TRANSFORMER CKT 1	560	560	0.26324	108.332	TUCO_2 345.00 (TUCO_2 XFMR) 345/230/13.2KV TRANSFORMER CKT 1
FDNS	06NR	0	15G	G15_009	FROM->TO	TUCO INTERCHANGE (GE M1022338) 345/230/13.2KV TRANSFORMER CKT 1	560	560	0.05378	108.1973	TUCO INTERCHANGE - TUCO_2 230.00 230KV CKT 1
FDNS	06ALL	0	15SP	G15_009	FROM->TO	TUCO INTERCHANGE (GE M1022338) 345/230/13.2KV TRANSFORMER CKT 1	560	560	0.24784	107.9073	TUCO INTERCHANGE - TUCO_2 230.00 230KV CKT 1
FDNS	06ALL	0	15SP	G15_009	FROM->TO	TUCO INTERCHANGE (GE M1022338) 345/230/13.2KV TRANSFORMER CKT 1	560	560	0.24784	105.9346	TUCO INTERCHANGE - TUCO_2 230.00 230KV CKT 1
FDNS	06ALL	0	15SP	G15_009	FROM->TO	TUCO_2 345.00 (TUCO_2 XFMR) 345/230/13.2KV TRANSFORMER CKT 1	560	560	0.28259	145.8188	TUCO INTERCHANGE - TUCO_2 345.00 345KV CKT 1
FDNS	06ALL	0	15SP	G15_009	FROM->TO	TUCO_2 345.00 (TUCO_2 XFMR) 345/230/13.2KV TRANSFORMER CKT 1	560	560	0.28259	142.7342	TUCO INTERCHANGE - TUCO_2 345.00 345KV CKT 1
FDNS	06ALL	0	15WP	G15_009	FROM->TO	TUCO_2 345.00 (TUCO_2 XFMR) 345/230/13.2KV TRANSFORMER CKT 1	560	560	0.28947	138.8622	TUCO INTERCHANGE - TUCO_2 345.00 345KV CKT 1
FDNS	06ALL	0	15WP	G15_009	FROM->TO	TUCO_2 345.00 (TUCO_2 XFMR) 345/230/13.2KV TRANSFORMER CKT 1	560	560	0.28947	136.3817	TUCO INTERCHANGE - TUCO_2 345.00 345KV CKT 1
FDNS	06NR	0	15G	G15_009	FROM->TO	TUCO_2 345.00 (TUCO_2 XFMR) 345/230/13.2KV TRANSFORMER CKT 1	560	560	0.0518	133.953	TUCO INTERCHANGE - TUCO_2 345.00 345KV CKT 1
FDNS	06NR	0	15G	G15_009	FROM->TO	TUCO_2 345.00 (TUCO_2 XFMR) 345/230/13.2KV TRANSFORMER CKT 1	560	560	0.0518	132.4001	TUCO INTERCHANGE - TUCO_2 345.00 345KV CKT 1
FDNS	06ALL	0	15WP	G15_009	FROM->TO	TUCO_2 345.00 (TUCO_2 XFMR) 345/230/13.2KV TRANSFORMER CKT 1	560	560	0.24604	109.7547	TUCO INTERCHANGE (GE M1022338) 345/230/13.2KV TRANSFORMER CKT 1
FDNS	06ALL	0	15WP	G15_009	FROM->TO	TUCO_2 345.00 (TUCO_2 XFMR) 345/230/13.2KV TRANSFORMER CKT 1	560	560	0.24604	108.6761	TUCO INTERCHANGE (GE M1022338) 345/230/13.2KV TRANSFORMER CKT 1
FDNS	06NR	0	15G	G15_009	FROM->TO	TUCO_2 345.00 (TUCO_2 XFMR) 345/230/13.2KV TRANSFORMER CKT 1	560	560	0.03731	107.6222	TUCO INTERCHANGE (GE M1022338) 345/230/13.2KV TRANSFORMER CKT 1
FDNS	06NR	0	15G	G15_009	FROM->TO	TUCO_2 345.00 (TUCO_2 XFMR) 345/230/13.2KV TRANSFORMER CKT 1	560	560	0.03731	106.6939	TUCO INTERCHANGE (GE M1022338) 345/230/13.2KV TRANSFORMER CKT 1
FDNS	06ALL	0	15WP	G15_009	FROM->TO	TUCO_2 345.00 (TUCO_2 XFMR) 345/230/13.2KV TRANSFORMER CKT 1	560	560	0.23034	102.7663	TUCO INTERCHANGE (SIEM 8743066) 345/230/13.2KV TRANSFORMER CKT 2
FDNS	06ALL	0	15WP	G15_009	FROM->TO	TUCO_2 345.00 (TUCO_2 XFMR) 345/230/13.2KV TRANSFORMER CKT 1	560	560	0.23034	101.7947	TUCO INTERCHANGE (SIEM 8743066) 345/230/13.2KV TRANSFORMER CKT 2
FDNS	06NR	0	15G	G15_009	FROM->TO	TUCO_2 345.00 (TUCO_2 XFMR) 345/230/13.2KV TRANSFORMER CKT 1	560	560	0.03461	100.8238	TUCO INTERCHANGE (SIEM 8743066) 345/230/13.2KV TRANSFORMER CKT 2
FDNS	06NR	0	15G	G15_009	FROM->TO	TUCO_2 345.00 (TUCO_2 XFMR) 345/230/13.2KV TRANSFORMER CKT 1	560	560	0.03461	100	TUCO INTERCHANGE (SIEM 8743066) 345/230/13.2KV TRANSFORMER CKT 2
FDNS	06ALL	0	15SP	G15_009	FROM->TO	TUCO_2 345.00 (TUCO_2 XFMR) 345/230/13.2KV TRANSFORMER CKT 1	560	560	0.24008	99.6	TUCO INTERCHANGE (GE M1022338) 345/230/13.2KV TRANSFORMER CKT 1
FDNS	06NR	0	15G	G15_009	FROM->TO	WOLFFORTH INTERCHANGE - YUMA INTERCHANGE 115KV CKT 1	218	239	0.11057	100.8035	LUBBOCK SOUTH INTERCHANGE - WOLFFORTH INTERCHANGE 230KV CKT 1
FDNS	06ALL	2	15G	G15_009	TO->FROM	AMOCO SWITCHING STATION - YOAKUM COUNTY INTERCHANGE 230KV CKT 1	319	351	0.27895	99.7	TUCO INTERCHANGE - YOAKUM_345 345.00 345KV CKT 1
FDNS	00NR	2	15SP	G15_009	FROM->TO	CUNNINGHAM STATION - MADDOX STATION 115KV CKT 1	160	160	0.04247	115.0187	HOBBS INTERCHANGE - MADDOX STATION 115KV CKT 1
FDNS	00NR	2	25SP	G15_009	FROM->TO	CUNNINGHAM STATION - POTASH JUNCTION INTERCHANGE 230KV CKT 1	319	351	0.06799	101.1874	HOBBS - KIOWA 7345.00 345KV CKT 1
FDNS	06NR	2	15G	G15_009	TO->FROM	DAWN SUB - Panda Energy Substation Hereford 115KV CKT 1	96	96	0.03334	100.6686	BUSHLAND INTERCHANGE - DEAF SMITH COUNTY INTERCHANGE 230KV CKT 1
FDNS	06NR	2	15G	G15_009	FROM->TO	DEAF SMITH COUNTY INTERCHANGE - Panda Energy Substation Hereford 115KV CKT 1	96	96	0.03334	105.2217	BUSHLAND INTERCHANGE - DEAF SMITH COUNTY INTERCHANGE 230KV CKT 1
FDNS	06ALL	2	15SP	G15_009	FROM->TO	ELK CITY 230KV (ELKCTY-6) 230/138/13.8KV TRANSFORMER CKT 1	272	316	0.06365	125.7818	BASE CASE
FDNS	06ALL	2	15SP	G15_009	FROM->TO	ELK CITY 230KV (ELKCTY-6) 230/138/13.8KV TRANSFORMER CKT 1	272	316	0.06365	124.4125	BASE CASE
FDNS	06ALL	2	15G	G15_009	FROM->TO	ELK CITY 230KV (ELKCTY-6) 230/138/13.8KV TRANSFORMER CKT 1	287	316	0.05924	111.2694	BASE CASE
FDNS	06ALL	2	15G	G15_009	FROM->TO	ELK CITY 230KV (ELKCTY-6) 230/138/13.8KV TRANSFORMER CKT 1	287	316	0.05924	110.3238	BASE CASE
FDNS	06ALL	2	15WP	G15_009	FROM->TO	ELK CITY 230KV (ELKCTY-6) 230/138/13.8KV TRANSFORMER CKT 1	287	316	0.06542	107.6385	BASE CASE
FDNS	06ALL	2	15WP	G15_009	FROM->TO	ELK CITY 230KV (ELKCTY-6) 230/138/13.8KV TRANSFORMER CKT 1	287	316	0.06542	106.6339	BASE CASE
FDNS	06ALL	2	20SP	G15_009	FROM->TO	ELK CITY 230KV (ELKCTY-6) 230/138/13.8KV TRANSFORMER CKT 1	272	316	0.06381	103.949	BASE CASE
FDNS	06ALL	2	20SP	G15_009	FROM->TO	ELK CITY 230KV (ELKCTY-6) 230/138/13.8KV TRANSFORMER CKT 1	272	316	0.06381	103.7414	BASE CASE

SOLUTION	GROUP	SCENARIO	SEASON	SOURCE	DIRECTION	MONITORED ELEMENT	RATEA (MVA)	RATEB(MVA)	TDF	TC%LOADING (% MVA)	CONTINGENCY
FDNS	06ALL	2	20WP	G15_009	FROM->TO	ELK CITY 230KV (ELKCTY-6) 230/138/13.8KV TRANSFORMER CKT 1	287	316	0.06306	101.967	BASE CASE
FDNS	06ALL	2	20WP	G15_009	FROM->TO	ELK CITY 230KV (ELKCTY-6) 230/138/13.8KV TRANSFORMER CKT 1	287	316	0.06306	101.2457	BASE CASE
FDNS	06ALL	2	15G	G15_009	FROM->TO	TUCO INTERCHANGE - TUCO_2 230.00 230KV CKT 1	478	502	0.32522	200.4231	TUCO INTERCHANGE - TUCO_2 345.00 345KV CKT 1
FDNS	06ALL	2	15SP	G15_009	FROM->TO	TUCO INTERCHANGE - TUCO_2 230.00 230KV CKT 1	478	502	0.33216	183.8625	TUCO INTERCHANGE - TUCO_2 345.00 345KV CKT 1
FDNS	06NR	2	15G	G15_009	FROM->TO	TUCO INTERCHANGE - TUCO_2 230.00 230KV CKT 1	478	502	0.11292	155.2111	TUCO INTERCHANGE - TUCO_2 345.00 345KV CKT 1
FDNS	06ALL	2	15WP	G15_009	FROM->TO	TUCO INTERCHANGE - TUCO_2 230.00 230KV CKT 1	557	557	0.33906	142.2485	TUCO INTERCHANGE - TUCO_2 345.00 345KV CKT 1
FDNS	06ALL	2	20SP	G15_009	FROM->TO	TUCO INTERCHANGE - TUCO_2 230.00 230KV CKT 1	478	502	0.33725	137.8459	TUCO INTERCHANGE - TUCO_2 345.00 345KV CKT 1
FDNS	06ALL	2	15G	G15_009	FROM->TO	TUCO_2 345.00 (TUCO_2 XFMR) 345/230/13.2KV TRANSFORMER CKT 1	560	560	0.29003	167.6169	TUCO INTERCHANGE - TUCO_2 345.00 345KV CKT 1
FDNS	06ALL	2	15G	G15_009	FROM->TO	TUCO_2 345.00 (TUCO_2 XFMR) 345/230/13.2KV TRANSFORMER CKT 1	560	560	0.29003	164.2629	TUCO INTERCHANGE - TUCO_2 345.00 345KV CKT 1
FDNS	06ALL	2	15SP	G15_009	FROM->TO	TUCO_2 345.00 (TUCO_2 XFMR) 345/230/13.2KV TRANSFORMER CKT 1	560	560	0.29718	149.8147	TUCO INTERCHANGE - TUCO_2 345.00 345KV CKT 1
FDNS	06ALL	2	15SP	G15_009	FROM->TO	TUCO_2 345.00 (TUCO_2 XFMR) 345/230/13.2KV TRANSFORMER CKT 1	560	560	0.29718	147.216	TUCO INTERCHANGE - TUCO_2 345.00 345KV CKT 1
FDNS	06ALL	2	15WP	G15_009	FROM->TO	TUCO_2 345.00 (TUCO_2 XFMR) 345/230/13.2KV TRANSFORMER CKT 1	560	560	0.30384	141.8557	TUCO INTERCHANGE - TUCO_2 345.00 345KV CKT 1
FDNS	06ALL	2	15WP	G15_009	FROM->TO	TUCO_2 345.00 (TUCO_2 XFMR) 345/230/13.2KV TRANSFORMER CKT 1	560	560	0.30384	139.9334	TUCO INTERCHANGE - TUCO_2 345.00 345KV CKT 1
FDNS	06NR	2	15G	G15_009	FROM->TO	TUCO_2 345.00 (TUCO_2 XFMR) 345/230/13.2KV TRANSFORMER CKT 1	560	560	0.05928	137.5112	TUCO INTERCHANGE - TUCO_2 345.00 345KV CKT 1
FDNS	06NR	2	15G	G15_009	FROM->TO	TUCO_2 345.00 (TUCO_2 XFMR) 345/230/13.2KV TRANSFORMER CKT 1	560	560	0.05928	135.6134	TUCO INTERCHANGE - TUCO_2 345.00 345KV CKT 1
FDNS	06ALL	2	20SP	G15_009	FROM->TO	TUCO_2 345.00 (TUCO_2 XFMR) 345/230/13.2KV TRANSFORMER CKT 1	560	560	0.29853	112.3827	TUCO INTERCHANGE - TUCO_2 345.00 345KV CKT 1
FDNS	06ALL	2	20SP	G15_009	FROM->TO	TUCO_2 345.00 (TUCO_2 XFMR) 345/230/13.2KV TRANSFORMER CKT 1	560	560	0.29853	112.1069	TUCO INTERCHANGE - TUCO_2 345.00 345KV CKT 1
FDNS	00NR	3	15SP	G15_009	FROM->TO	CUNNINGHAM STATION - MADDOX STATION 115KV CKT 1	160	160	0.04241	114.9529	HOBBS INTERCHANGE - MADDOX STATION 115KV CKT 1
FDNS	00NR	3	25SP	G15_009	FROM->TO	CUNNINGHAM STATION - POTASH JUNCTION INTERCHANGE 230KV CKT 1	319	351	0.07047	100.1248	HOBBS - KIOWA 7345.00 345KV CKT 1
FDNS	06ALL	3	15SP	G15_009	FROM->TO	ELK CITY 230KV (ELKCTY-6) 230/138/13.8KV TRANSFORMER CKT 1	272	316	0.06211	123.9727	BASE CASE
FDNS	06ALL	3	15SP	G15_009	FROM->TO	ELK CITY 230KV (ELKCTY-6) 230/138/13.8KV TRANSFORMER CKT 1	272	316	0.06211	122.7526	BASE CASE
FDNS	06ALL	3	15G	G15_009	FROM->TO	ELK CITY 230KV (ELKCTY-6) 230/138/13.8KV TRANSFORMER CKT 1	287	316	0.05773	109.3338	BASE CASE
FDNS	06ALL	3	15G	G15_009	FROM->TO	ELK CITY 230KV (ELKCTY-6) 230/138/13.8KV TRANSFORMER CKT 1	287	316	0.05773	108.4212	BASE CASE
FDNS	06ALL	3	15WP	G15_009	FROM->TO	ELK CITY 230KV (ELKCTY-6) 230/138/13.8KV TRANSFORMER CKT 1	287	316	0.06388	106.1239	BASE CASE
FDNS	06ALL	3	15WP	G15_009	FROM->TO	ELK CITY 230KV (ELKCTY-6) 230/138/13.8KV TRANSFORMER CKT 1	287	316	0.06388	105.1628	BASE CASE
FDNS	06ALL	3	20SP	G15_009	FROM->TO	ELK CITY 230KV (ELKCTY-6) 230/138/13.8KV TRANSFORMER CKT 1	272	316	0.06219	102.7547	BASE CASE
FDNS	06ALL	3	20SP	G15_009	FROM->TO	ELK CITY 230KV (ELKCTY-6) 230/138/13.8KV TRANSFORMER CKT 1	272	316	0.06219	102.5743	BASE CASE
FDNS	06ALL	3	20WP	G15_009	FROM->TO	ELK CITY 230KV (ELKCTY-6) 230/138/13.8KV TRANSFORMER CKT 1	287	316	0.0615	100.8598	BASE CASE
FDNS	06ALL	3	20WP	G15_009	FROM->TO	ELK CITY 230KV (ELKCTY-6) 230/138/13.8KV TRANSFORMER CKT 1	287	316	0.0615	100.2492	BASE CASE
FDNS	06ALL	3	15G	G15_009	TO->FROM	GRAPEVINE INTERCHANGE - NICHOLS STATION 230KV CKT 1	319	351	0.04921	100.925	BASE CASE
FDNS	06ALL	3	15G	G15_009	FROM->TO	TUCO INTERCHANGE - TUCO_2 230.00 230KV CKT 1	478	502	0.28081	168.7325	TUCO INTERCHANGE - TUCO_2 345.00 345KV CKT 1
FDNS	06ALL	3	15SP	G15_009	FROM->TO	TUCO INTERCHANGE - TUCO_2 230.00 230KV CKT 1	478	502	0.28716	154.1201	TUCO INTERCHANGE - TUCO_2 345.00 345KV CKT 1
FDNS	06NR	3	15G	G15_009	FROM->TO	TUCO INTERCHANGE - TUCO_2 230.00 230KV CKT 1	478	502	0.09028	132.6749	TUCO INTERCHANGE - TUCO_2 345.00 345KV CKT 1
FDNS	06ALL	3	15WP	G15_009	FROM->TO	TUCO INTERCHANGE - TUCO_2 230.00 230KV CKT 1	557	557	0.29327	120.7037	TUCO INTERCHANGE - TUCO_2 345.00 345KV CKT 1
FDNS	06ALL	3	20SP	G15_009	FROM->TO	TUCO INTERCHANGE - TUCO_2 230.00 230KV CKT 1	478	502	0.29193	118.0325	TUCO INTERCHANGE - TUCO_2 345.00 345KV CKT 1
FDNS	06ALL	3	20WP	G15_009	FROM->TO	TUCO INTERCHANGE - TUCO_2 230.00 230KV CKT 1	557	557	0.28985	111.9352	TUCO INTERCHANGE - TUCO_2 345.00 345KV CKT 1
FDNS	06ALL	3	15G	G15_009	FROM->TO	TUCO_2 345.00 (TUCO_2 XFMR) 345/230/13.2KV TRANSFORMER CKT 1	560	560	0.25886	151.8506	TUCO INTERCHANGE - TUCO_2 345.00 345KV CKT 1
FDNS	06ALL	3	15G	G15_009	FROM->TO	TUCO_2 345.00 (TUCO_2 XFMR) 345/230/13.2KV TRANSFORMER CKT 1	560	560	0.25886	149.0893	TUCO INTERCHANGE - TUCO_2 345.00 345KV CKT 1
FDNS	06ALL	3	15SP	G15_009	FROM->TO	TUCO_2 345.00 (TUCO_2 XFMR) 345/230/13.2KV TRANSFORMER CKT 1	560	560	0.26527	133.4173	TUCO INTERCHANGE - TUCO_2 345.00 345KV CKT 1
FDNS	06ALL	3	15SP	G15_009	FROM->TO	TUCO_2 345.00 (TUCO_2 XFMR) 345/230/13.2KV TRANSFORMER CKT 1	560	560	0.26527	131.8248	TUCO INTERCHANGE - TUCO_2 345.00 345KV CKT 1
FDNS	06ALL	3	15WP	G15_009	FROM->TO	TUCO_2 345.00 (TUCO_2 XFMR) 345/230/13.2KV TRANSFORMER CKT 1	560	560	0.2714	127.9846	TUCO INTERCHANGE - TUCO_2 345.00 345KV CKT 1
FDNS	06ALL	3	15WP	G15_009	FROM->TO	TUCO_2 345.00 (TUCO_2 XFMR) 345/230/13.2KV TRANSFORMER CKT 1	560	560	0.2714	126.6738	TUCO INTERCHANGE - TUCO_2 345.00 345KV CKT 1
FDNS	06NR	3	15G	G15_009	FROM->TO	TUCO_2 345.00 (TUCO_2 XFMR) 345/230/13.2KV TRANSFORMER CKT 1	560	560	0.04322	125.1163	TUCO INTERCHANGE - TUCO_2 345.00 345KV CKT 1
FDNS	06NR	3	15G	G15_009	FROM->TO	TUCO_2 345.00 (TUCO_2 XFMR) 345/230/13.2KV TRANSFORMER CKT 1	560	560	0.04322	124.0195	TUCO INTERCHANGE - TUCO_2 345.00 345KV CKT 1
FDNS	06ALL	3	20WP	G15_009	FROM->TO	TUCO_2 345.00 (TUCO_2 XFMR) 345/230/13.2KV TRANSFORMER CKT 1	560	560	0.26378	121.9391	TUCO INTERCHANGE - TUCO_2 345.00 345KV CKT 1
FDNS	06ALL	3	20WP	G15_009	FROM->TO	TUCO_2 345.00 (TUCO_2 XFMR) 345/230/13.2KV TRANSFORMER CKT 1	560	560	0.26378	121.0095	TUCO INTERCHANGE - TUCO_2 345.00 345KV CKT 1
FDNS	06ALL	3	20SP	G15_009	FROM->TO	TUCO_2 345.00 (TUCO_2 XFMR) 345/230/13.2KV TRANSFORMER CKT 1	560	560	0.26652	100.2304	TUCO INTERCHANGE - TUCO_2 345.00 345KV CKT 1
FDNS	06ALL	3	20SP	G15_009	FROM->TO	TUCO_2 345.00 (TUCO_2 XFMR) 345/230/13.2KV TRANSFORMER CKT 1	560	560	0.26652	100.1212	TUCO INTERCHANGE - TUCO_2 345.00 345KV CKT 1
FDNS	06ALL	4	15SP	G15_009	FROM->TO	CHISHOLM6 230.00 - ELK CITY 230KV 230KV CKT 1	353	353	0.06624	100.9254	BASE CASE
FDNS	00NR	4	15SP	G15_009	FROM->TO	CUNNINGHAM STATION - MADDOX STATION 115KV CKT 1	160	160	0.04242	114.9404	HOBBS INTERCHANGE - MADDOX STATION 115KV CKT 1
FDNS	00NR	4	25SP	G15_009	FROM->TO	CUNNINGHAM STATION - POTASH JUNCTION INTERCHANGE 230KV CKT 1	319	351	0.07019	100.1653	HOBBS - KIOWA 7345.00 345KV CKT 1
FDNS	06ALL	4	15SP	G15_009	FROM->TO	ELK CITY 230KV (ELKCTY-6) 230/138/13.8KV TRANSFORMER CKT 1	272	316	0.06624	129.8441	BASE CASE
FDNS	06ALL	4	15SP	G15_009	FROM->TO	ELK CITY 230KV (ELKCTY-6) 230/138/13.8KV TRANSFORMER CKT 1	272	316	0.06624	128.5805	BASE CASE
FDNS	06ALL	4	15G	G15_009	FROM->TO	ELK CITY 230KV (ELKCTY-6) 230/138/13.8KV TRANSFORMER CKT 1	287	316	0.06198	116.3182	BASE CASE
FDNS	06ALL	4	15G	G15_009	FROM->TO	ELK CITY 230KV (ELKCTY-6) 230/138/13.8KV TRANSFORMER CKT 1	287	316	0.06198	115.4161	BASE CASE
FDNS	06ALL	4	15WP	G15_009	FROM->TO	ELK CITY 230KV (ELKCTY-6) 230/138/13.8KV TRANSFORMER CKT 1	287	316	0.06816	112.0283	BASE CASE
FDNS	06ALL	4	15WP	G15_009	FROM->TO	ELK CITY 230KV (ELKCTY-6) 230/138/13.8KV TRANSFORMER CKT 1	287	316	0.06816	111.0401	BASE CASE
FDNS	06ALL	4	20SP	G15_009	FROM->TO	ELK CITY 230KV (ELKCTY-6) 230/138/13.8KV TRANSFORMER CKT 1	272	316	0.06627	107.1637	BASE CASE
FDNS	06ALL	4	20SP	G15_009	FROM->TO	ELK CITY 230KV (ELKCTY-6) 230/138/13.8KV TRANSFORMER CKT 1	272	316	0.06627	106.9127	BASE CASE
FDNS	06ALL	4	20WP	G15_009	FROM->TO	ELK CITY 230KV (ELKCTY-6) 230/138/13.8KV TRANSFORMER CKT 1	287	316	0.06556	106.7868	BASE CASE
FDNS	06ALL	4	20WP	G15_009	FROM->TO	ELK CITY 230KV (ELKCTY-6) 230/138/13.8KV TRANSFORMER CKT 1	287	316	0.06556	106.1189	BASE CASE
FDNS	06ALL	4	15G	G15_009	FROM->TO	TUCO INTERCHANGE - TUCO_2 230.00 230KV CKT 1	478	502	0.26571	148.7289	TUCO INTERCHANGE - TUCO_2 345.00 345KV CKT 1
FDNS	06ALL	4	15SP	G15_009	FROM->TO	TUCO INTERCHANGE - TUCO_2 230.00 230KV CKT 1	478	502	0.27146	139.4418	TUCO INTERCHANGE - TUCO_2 345.00 345KV CKT 1
FDNS	06NR	4	15G	G15_009	FROM->TO	TUCO INTERCHANGE - TUCO_2 230.00 230KV CKT 1	478	502	0.09297	117.8451	TUCO INTERCHANGE - TUCO_2 345.00 345KV CKT 1
FDNS	06ALL	4	20SP	G15_009	FROM->TO	TUCO INTERCHANGE - TUCO_2 230.00 230KV CKT 1	478	502	0.27613	108.3093	TUCO INTERCHANGE - TUCO_2 345.00 345KV CKT 1
FDNS	06ALL	4	15WP	G15_009	FROM->TO	TUCO INTERCHANGE - TUCO_2 230.00 230KV CKT 1	557	557	0.27728	107.3541	TUCO INTERCHANGE - TUCO_2 345.00 345KV CKT 1
FDNS	06ALL	4	20WP	G15_009	FROM->TO	TUCO INTERCHANGE - TUCO_2 230.00 230KV CKT 1	557	557	0.27451	99.6	TUCO INTERCHANGE - TUCO_2 345.00 345KV CKT 1
FDNS	06ALL	4	15G	G15_009	FROM->TO	TUCO_2 345.00 (TUCO_2 XFMR) 345/230/13.2KV TRANSFORMER CKT 1	560	560	0.23301	127.7356	TUCO INTERCHANGE - TUCO_2 345.00 345KV CKT 1
FDNS	06ALL	4	15G	G15_009	FROM->TO	TUCO_2 345.00 (TUCO_2 XFMR) 345/230/13.2KV TRANSFORMER CKT 1	560	560	0.23301	126.397	TUCO INTERCHANGE - TUCO_2 345.00 345KV CKT 1
FDNS	06ALL	4	15SP	G15_009	FROM->TO	TUCO_2 345.00 (TUCO_2 XFMR) 345/230/13.2KV TRANSFORMER CKT 1	560	560	0.23864	114.1941	TUCO INTERCHANGE - TUCO_2 345.00 345KV CKT 1
FDNS	06ALL	4	15SP	G15_009	FROM->TO	TUCO_2 345.00 (TUCO_2 XFMR) 345/230/13.2KV TRANSFORMER CKT 1	560	560	0.23864	113.3239	TUCO INTERCHANGE - TUCO_2 345.00 345KV CKT 1
FDNS	06ALL	4	15WP	G15_009	FROM->TO	TUCO_2 345.00 (TUCO_2 XFMR) 345/230/13.2KV TRANSFORMER CKT 1	560	560	0.24421	108.1334	TUCO INTERCHANGE - TUCO_2 345.00 345KV CKT 1
FDNS	06ALL	4	15WP	G15_009	FROM->TO	TUCO_2 345.00 (TUCO_2 XFMR) 345/230/13.2KV TRANSFORMER CKT 1	560	560	0.24421	107.4733	TUCO INTERCHANGE - TUCO_2 345.00 345KV CKT 1
FDNS	06NR	4	15G	G15_009	FROM->TO	TUCO_2 345.00 (TUCO_2 XFMR) 345/230/13.2KV TRANSFORMER CKT 1	560	560	0.04778	105.1511	TUCO INTERCHANGE - TUCO_2 345.00 345KV CKT 1
FDNS	06NR	4	15G	G15_009	FROM->TO	TUCO_2 345.00 (TUCO_2 XFMR) 345/230/13.2KV TRANSFORMER CKT 1	560	560	0.04778	104.6026	TUCO INTERCHANGE - TUCO_2 345.00 345KV CKT 1

SOLUTION	GROUP	SCENARIO	SEASON	SOURCE	DIRECTION	MONITORED ELEMENT	RATEA (MVA)	RATEB(MVA)	TDF	TC%LOADING (% MVA)	CONTINGENCY
FDNS	06ALL	4	20WP	G15_009	FROM->TO	TUCO_2 345.00 (TUCO_2 XFMR) 345/230/13.2KV TRANSFORMER CKT 1	560	560	0.23802	102.8738	TUCO INTERCHANGE - TUCO_2 345.00 345KV CKT 1
FDNS	06ALL	4	20WP	G15_009	FROM->TO	TUCO_2 345.00 (TUCO_2 XFMR) 345/230/13.2KV TRANSFORMER CKT 1	560	560	0.23802	102.4022	TUCO INTERCHANGE - TUCO_2 345.00 345KV CKT 1
FDNS	06ALL	5	15SP	G15_009	FROM->TO	CHISHOLM6 230.00 - ELK CITY 230KV 230KV CKT 1	353	353	0.06644	100.9761	BASE CASE
FDNS	00NR	5	15SP	G15_009	FROM->TO	CUNNINGHAM STATION - MADDOX STATION 115KV CKT 1	160	160	0.04243	114.9421	HOBBS INTERCHANGE - MADDOX STATION 115KV CKT 1
FDNS	00NR	5	25SP	G15_009	FROM->TO	CUNNINGHAM STATION - POTASH JUNCTION INTERCHANGE 230KV CKT 1	319	351	0.07037	100.111	HOBBS - KIOWA 7345.00 345KV CKT 1
FDNS	06ALL	5	15SP	G15_009	FROM->TO	ELK CITY 230KV (ELKCTY-6) 230/138/13.8KV TRANSFORMER CKT 1	272	316	0.06644	129.9064	BASE CASE
FDNS	06ALL	5	15SP	G15_009	FROM->TO	ELK CITY 230KV (ELKCTY-6) 230/138/13.8KV TRANSFORMER CKT 1	272	316	0.06644	128.6412	BASE CASE
FDNS	06ALL	5	15G	G15_009	FROM->TO	ELK CITY 230KV (ELKCTY-6) 230/138/13.8KV TRANSFORMER CKT 1	287	316	0.06218	116.3419	BASE CASE
FDNS	06ALL	5	15G	G15_009	FROM->TO	ELK CITY 230KV (ELKCTY-6) 230/138/13.8KV TRANSFORMER CKT 1	287	316	0.06218	115.4406	BASE CASE
FDNS	06ALL	5	15WP	G15_009	FROM->TO	ELK CITY 230KV (ELKCTY-6) 230/138/13.8KV TRANSFORMER CKT 1	287	316	0.06836	112.0665	BASE CASE
FDNS	06ALL	5	15WP	G15_009	FROM->TO	ELK CITY 230KV (ELKCTY-6) 230/138/13.8KV TRANSFORMER CKT 1	287	316	0.06836	111.0777	BASE CASE
FDNS	06ALL	5	20SP	G15_009	FROM->TO	ELK CITY 230KV (ELKCTY-6) 230/138/13.8KV TRANSFORMER CKT 1	272	316	0.06646	107.1735	BASE CASE
FDNS	06ALL	5	20SP	G15_009	FROM->TO	ELK CITY 230KV (ELKCTY-6) 230/138/13.8KV TRANSFORMER CKT 1	272	316	0.06646	106.9225	BASE CASE
FDNS	06ALL	5	20WP	G15_009	FROM->TO	ELK CITY 230KV (ELKCTY-6) 230/138/13.8KV TRANSFORMER CKT 1	287	316	0.06575	106.7889	BASE CASE
FDNS	06ALL	5	20WP	G15_009	FROM->TO	ELK CITY 230KV (ELKCTY-6) 230/138/13.8KV TRANSFORMER CKT 1	287	316	0.06575	106.1215	BASE CASE
FDNS	00NR	6	15SP	G15_009	FROM->TO	CUNNINGHAM STATION - MADDOX STATION 115KV CKT 1	160	160	0.04243	114.9491	HOBBS INTERCHANGE - MADDOX STATION 115KV CKT 1
FDNS	00NR	6	25SP	G15_009	FROM->TO	CUNNINGHAM STATION - POTASH JUNCTION INTERCHANGE 230KV CKT 1	319	351	0.07044	99.5	HOBBS - KIOWA 7345.00 345KV CKT 1
FDNS	00NR	7	25SP	G15_009	FROM->TO	CUNNINGHAM STATION - POTASH JUNCTION INTERCHANGE 230KV CKT 1	319	351	0.07044	99.5	HOBBS - KIOWA 7345.00 345KV CKT 1
FDNSLock-Blown up	06ALL	0	15G	G15_010		Non-Converged Contingency	0	0	0.33327	-	SPSCONT-02X
FDNSLock-Blown up	06ALL	0	15G	G15_010		Non-Converged Contingency	0	0	0.2786	-	SPP-SWPS-T59
FDNSLock-Blown up	06ALL	0	15G	G15_010		Non-Converged Contingency	478	502	0.23712	-	TOLK STATION EAST - TUCO INTERCHANGE 230KV CKT 1
FDNSLock-Blown up	06ALL	0	15G	G15_010		Non-Converged Contingency	478	502	0.20106	-	NEWHART 230 - PLANT X STATION 230KV CKT 1
FDNSLock-Blown up	06ALL	0	15G	G15_010		Non-Converged Contingency	0	0	0.19485	-	SPSCONT-05AX
FDNSLock-Blown up	06ALL	0	15G	G15_010		Non-Converged Contingency	956	994	0.1832	-	G14-074T 345.00 - OKLAUNION 345KV CKT 1
FDNSLock-Blown up	06ALL	0	15G	G15_010		Non-Converged Contingency	956	994	0.1832	-	G14-074T 345.00 - TUCO INTERCHANGE 345KV CKT 1
FDNSLock-Blown up	06ALL	0	15G	G15_010		Non-Converged Contingency	956	994	0.1832	-	OKLAUNION 345KV SWITCHED SHUNT
FDNSLock-Blown up	06ALL	0	15G	G15_010		Non-Converged Contingency	319	351	0.17454	-	BUSHLAND INTERCHANGE - DEAF SMITH COUNTY INTERCHANGE 230KV CKT 1
FDNSLock-Blown up	06ALL	0	15G	G15_010		Non-Converged Contingency	319	351	0.17454	-	BUSHLAND INTERCHANGE 230KV SWITCHED SHUNT
FDNSLock-Blown up	06ALL	0	15G	G15_010		Non-Converged Contingency	560	560	0.16822	-	TUCO INTERCHANGE (GE M1022338) 345/230/13.2KV TRANSFORMER CKT 1
FDNSLock-Blown up	06ALL	0	15G	G15_010		Non-Converged Contingency	1195	1195	0.16745	-	GRACEMONT - MINCO 345KV CKT 1
FDNSLock-Blown up	06ALL	0	15G	G15_010		Non-Converged Contingency	956	1052	0.16663	-	G14_038T 345.00 - Hitchland Interchange 345KV CKT 1
FDNSLock-Blown up	06ALL	0	15G	G15_010		Non-Converged Contingency	956	1052	0.16663	-	G14_038T 345.00 - POTTER COUNTY INTERCHANGE 345KV CKT 1
FDNSLock-Blown up	06ALL	0	15G	G15_010		Non-Converged Contingency	560	560	0.16663	-	POTTER COUNTY INTERCHANGE (WAUK 90343-A) 345/230/13.2KV TRANSFORMER CKT 1
FDNSLock-Blown up	06ALL	0	15G	G15_010		Non-Converged Contingency	319	351	0.15299	-	BUSHLAND INTERCHANGE - POTTER COUNTY INTERCHANGE 230KV CKT 1
FDNSLock-Blown up	06ALL	0	15G	G15_010		Non-Converged Contingency	1330	1940	0.15223	-	CHISHOLM7 345.00 - GRACEMONT 345KV CKT 1
FDNSLock-Blown up	06ALL	0	15G	G15_010		Non-Converged Contingency	560	560	0.15065	-	TUCO_2 345.00 (TUCO_2 XFMR) 345/230/13.2KV TRANSFORMER CKT 1
FDNSLock-Blown up	06ALL	0	15G	G15_010		Non-Converged Contingency	560	644	0.14659	-	TUCO INTERCHANGE (SIEM 8743066) 345/230/13.2KV TRANSFORMER CKT 2
FDNSLock-Blown up	06ALL	0	15G	G15_010		Non-Converged Contingency	1792	1792	0.14116	-	CHISHOLM7 345.00 - WOODWARD DISTRICT EHV 345KV CKT 1
FDNSLock-Blown up	06ALL	0	15G	G15_010		Non-Converged Contingency	1792	1792	0.14113	-	BORDER 7345.00 - CHISHOLM7 345.00 345KV CKT 1
FDNSLock-Blown up	06ALL	0	15G	G15_010		Non-Converged Contingency	1792	1792	0.14113	-	BORDER 7345.00 - CHISHOLM7 345.00 345KV CKT 2
FDNSLock-Blown up	06ALL	0	15G	G15_010		Non-Converged Contingency	1420	1775	0.14113	-	BORDER 7345.00 - TUCO_2 345.00 345KV CKT 1
FDNSLock-Blown up	06ALL	0	15G	G15_010		Non-Converged Contingency	1420	1775	0.14113	-	BORDER 7345.00 - TUCO_2 345.00 345KV CKT 2
FDNSLock-Blown up	06ALL	0	15G	G15_010		Non-Converged Contingency	478	478	0.13896	-	DEAF SMITH COUNTY INTERCHANGE - G14-068T 230.00 230KV CKT 1
FDNSLock-Blown up	06ALL	0	15G	G15_010		Non-Converged Contingency	478	478	0.13896	-	G14-068T 230.00 - PLANT X STATION 230KV CKT 1
FDNSLock-Blown up	06ALL	0	15G	G15_010		Non-Converged Contingency	0	0	0.13895	-	SPP-SWPS-02
FDNSLock-Blown up	06ALL	0	15G	G15_010		Non-Converged Contingency	1420	1775	0.13161	-	TUCO INTERCHANGE - TUCO_2 345.00 345KV CKT 1
FDNSLock-Blown up	06ALL	0	15G	G15_010		Non-Converged Contingency	0	0	0.13072	-	SPP-SWPS-03
FDNSLock-Blown up	06ALL	0	15G	G15_010		Non-Converged Contingency	956	1052	0.12728	-	FINNEY SWITCHING STATION - Hitchland Interchange 345KV CKT 1
FDNSLock-Blown up	06ALL	0	15G	G15_010		Non-Converged Contingency	956	1052	0.12728	-	FINNEY SWITCHING STATION - HOLCOMB 345KV CKT 1
FDNSLock-Blown up	06ALL	0	15G	G15_010		Non-Converged Contingency	0	0	0.12728	-	SPP-SWPS-05
FDNSLock-Blown up	06ALL	0	15G	G15_010		Non-Converged Contingency	319	351	0.1264	-	SUNDOWN INTERCHANGE - WOLFFORTH INTERCHANGE 230KV CKT 1
FDNSLock-Blown up	06ALL	0	15G	G15_010		Non-Converged Contingency	319	351	0.12068	-	LUBBOCK SOUTH INTERCHANGE - WOLFFORTH INTERCHANGE 230KV CKT 1
FDNSLock-Blown up	06ALL	0	15G	G15_010		Non-Converged Contingency	478	502	0.11411	-	NEWHART 230 - POTTER COUNTY INTERCHANGE 230KV CKT 1
FDNSLock-Blown up	06ALL	0	15G	G15_010		Non-Converged Contingency	478	502	0.10327	-	TUCO INTERCHANGE - TUCO_2 230.00 230KV CKT 1
FDNSLock-Blown up	06ALL	0	15G	G15_010		Non-Converged Contingency	1420	1775	0.09742	-	G11_051T 345.00 - TATONGA7 345.00 345KV CKT 1
FDNSLock-Blown up	06ALL	0	15G	G15_010		Non-Converged Contingency	1420	1775	0.09742	-	G11_051T 345.00 - WOODWARD DISTRICT EHV 345KV CKT 1
FDNSLock-Blown up	06ALL	0	15G	G15_010		Non-Converged Contingency	1195	1195	0.09742	-	NORTHWEST - TATONGA7 345.00 345KV CKT 1
FDNSLock-Blown up	06ALL	0	15G	G15_010		Non-Converged Contingency	0	0	0.09742	-	SPSCONT-04
FDNSLock-Blown up	06ALL	0	15G	G15_010		Non-Converged Contingency	0	0	0.09742	-	SPSCONT-05B
FDNSLock-Blown up	06ALL	0	15G	G15_010		Non-Converged Contingency	1420	1775	0.08446	-	G11-14T 345.00 - WOODWARD DISTRICT EHV 345KV CKT 1
FDNSLock-Blown up	06ALL	0	15G	G15_010		Non-Converged Contingency	1420	1775	0.08446	-	G11-14T 345.00 - WOODWARD DISTRICT EHV 345KV CKT 2
FDNSLock-Blown up	06ALL	0	15G	G15_010		Non-Converged Contingency	478	502	0.07909	-	JONES STATION - TUCO INTERCHANGE 230KV CKT 1
FDNSLock-Blown up	06ALL	0	15G	G15_010		Non-Converged Contingency	319	351	0.07752	-	AMARILLO SOUTH INTERCHANGE - SWISHER COUNTY INTERCHANGE 230KV CKT 1
FDNSLock-Blown up	06ALL	0	15G	G15_010		Non-Converged Contingency	478	502	0.06992	-	HITCHLAND INTERCHANGE - MOORE COUNTY INTERCHANGE 230KV CKT 1
FDNSLock-Blown up	06ALL	0	15G	G15_010		Non-Converged Contingency	478	502	0.06992	-	HITCHLAND INTERCHANGE - MOORE COUNTY INTERCHANGE 230KV CKT 1
FDNSLock-Blown up	06ALL	0	15G	G15_010		Non-Converged Contingency	96	96	0.06965	-	CARGILL SUB - DEAF SMITH REC-#24 115KV CKT 1
FDNSLock-Blown up	06ALL	0	15G	G15_010		Non-Converged Contingency	96	96	0.06965	-	CURRY COUNTY INTERCHANGE - DEAF SMITH REC-#20 115KV CKT 1
FDNSLock-Blown up	06ALL	0	15G	G15_010		Non-Converged Contingency	96	96	0.06965	-	DEAF SMITH REC-#20 - PARMER COUNTY SUB 115KV CKT 1
FDNSLock-Blown up	06ALL	0	15G	G15_010		Non-Converged Contingency	96	96	0.06965	-	DEAF SMITH REC-#24 - PARMER COUNTY SUB 115KV CKT 1
FDNSLock-Blown up	06ALL	0	15G	G15_010		Non-Converged Contingency	439	439	0.06948	-	CHISHOLM6 230.00 - SWEETWATER 230KV CKT 1
FDNSLock-Blown up	06ALL	0	15G	G15_010		Non-Converged Contingency	319	351	0.06948	-	GRAPEVINE INTERCHANGE - STATELINE INTERCHANGE 230KV CKT 1
FDNSLock-Blown up	06ALL	0	15G	G15_010		Non-Converged Contingency	349	395	0.06948	-	STATELINE INTERCHANGE - STLN-DEMARC6 230KV CKT 1
FDNSLock-Blown up	06ALL	0	15G	G15_010		Non-Converged Contingency	396	441	0.06948	-	STLN-DEMARC6 - SWEETWATER 230KV CKT 1
FDNSLock-Blown up	06ALL	0	15G	G15_010		Non-Converged Contingency	319	351	0.06145	-	MOORE COUNTY INTERCHANGE - POTTER COUNTY INTERCHANGE 230KV CKT 1
FDNSLock-Blown up	06ALL	0	15G	G15_010		Non-Converged Contingency	319	351	0.06145	-	MOORE COUNTY INTERCHANGE - POTTER COUNTY INTERCHANGE 230KV CKT 1

SOLUTION	GROUP	SCENARIO	SEASON	SOURCE	DIRECTION	MONITORED ELEMENT	RATEA (MVA)	RATEB(MVA)	TDF	TC%LOADING (% MVA)	CONTINGENCY
FDNSLock-Blown up	06ALL	0	15G	G15_010		Non-Converged Contingency	319	351	0.06124	-	GRAPEVINE INTERCHANGE - NICHOLS STATION 230KV CKT 1
FDNSLock-Blown up	06ALL	0	15G	G15_010		Non-Converged Contingency	1413	1517	0.0599	-	BUCKNER7 345.00 - SPEARVILLE 345KV CKT 1
FDNSLock-Blown up	06ALL	0	15G	G15_010		Non-Converged Contingency	439	439	0.05834	-	CHISHOLM6 230.00 - ELK CITY 230KV 230KV CKT 1
FDNSLock-Blown up	06ALL	0	15G	G15_010		Non-Converged Contingency	287	316	0.05834	-	ELK CITY 230KV (ELKCTY-6) 230/138/13.8KV TRANSFORMER CKT 1
FDNSLock-Blown up	06ALL	0	15G	G15_010		Non-Converged Contingency	276	304	0.05543	-	BAILEY COUNTY INTERCHANGE - G15-018T 115.00 115KV CKT 1
FDNSLock-Blown up	06ALL	0	15G	G15_010		Non-Converged Contingency	0	0	0.05543	-	SPP-SWPS-V12
FDNSLock-Blown up	06ALL	0	15G	G15_010		Non-Converged Contingency	218	239	0.04494	-	WOLFFORTH INTERCHANGE - YUMA INTERCHANGE 115KV CKT 1
FDNSLock-Blown up	06ALL	0	15G	G15_010		Non-Converged Contingency	319	351	0.03563	-	AMOCO SWITCHING STATION - SUNDOWN INTERCHANGE 230KV CKT 1
FDNSLock-Blown up	06ALL	0	15G	G15_010		Non-Converged Contingency	319	351	0.03563	-	AMOCO SWITCHING STATION - YOAKUM COUNTY INTERCHANGE 230KV CKT 1
FDNSLock-Blown up	06ALL	0	15G	G15_010		Non-Converged Contingency	319	351	0.03364	-	CARLISLE INTERCHANGE - TUCO INTERCHANGE 230KV CKT 1
FDNSLock-Blown up	06ALL	0	15SP	G15_010		Non-Converged Contingency	0	0	0.34567	-	SPSCONT-02X
FDNSLock-Blown up	06ALL	0	15SP	G15_010		Non-Converged Contingency	956	994	0.18942	-	G14-074T 345.00 - OKLAUNION 345KV CKT 1
FDNSLock-Blown up	06ALL	0	15SP	G15_010		Non-Converged Contingency	956	994	0.18942	-	G14-074T 345.00 - TUCO INTERCHANGE 345KV CKT 1
FDNSLock-Blown up	06ALL	0	15SP	G15_010		Non-Converged Contingency	956	1052	0.17283	-	G14_038T 345.00 - Hitchland Interchange 345KV CKT 1
FDNSLock-Blown up	06ALL	0	15SP	G15_010		Non-Converged Contingency	1420	1775	0.14509	-	BORDER 7345.00 - TUCO_2 345.00 345KV CKT 1
FDNSLock-Blown up	06ALL	0	15SP	G15_010		Non-Converged Contingency	1420	1775	0.14509	-	BORDER 7345.00 - TUCO_2 345.00 345KV CKT 2
FDNSLock-Blown up	06ALL	0	15SP	G15_010		Non-Converged Contingency	478	478	0.13982	-	G14-068T 230.00 - PLANT X STATION 230KV CKT 1
FDNSLock-Blown up	06ALL	0	15WP	G15_010		Non-Converged Contingency	1033	1071	0.1945	-	G14-074T 345.00 - OKLAUNION 345KV CKT 1
FDNSLock-Blown up	06ALL	0	20SP	G15_010		Non-Converged Contingency	956	994	0.24964	-	G14-074T 345.00 - OKLAUNION 345KV CKT 1
FDNSLock-Blown up	06ALL	0	20WP	G15_010		Non-Converged Contingency	0	0	0.34506	-	SPSCONT-02X
FDNSLock-Blown up	06ALL	0	20WP	G15_010		Non-Converged Contingency	1033	1071	0.24663	-	G14-074T 345.00 - OKLAUNION 345KV CKT 1
FDNSLock-Blown up	06ALL	0	20WP	G15_010		Non-Converged Contingency	1033	1071	0.24663	-	G14-074T 345.00 - TUCO INTERCHANGE 345KV CKT 1
FDNSLock-Blown up	06ALL	0	20WP	G15_010		Non-Converged Contingency	1420	1775	0.18591	-	BORDER 7345.00 - TUCO_2 345.00 345KV CKT 1
FDNSLock-Blown up	06ALL	0	20WP	G15_010		Non-Converged Contingency	1792	1792	0.18591	-	BORDER 7345.00 - WOODWARD DISTRICT EHV 345KV CKT 1
FDNSLock-Blown up	06ALL	0	20WP	G15_010		Non-Converged Contingency	956	1052	0.17253	-	G14_038T 345.00 - Hitchland Interchange 345KV CKT 1
FDNSLock-Blown up	06ALL	2	15G	G15_010		Non-Converged Contingency	0	0	0.31994	-	SPSCONT-02X
FDNSLock-Blown up	06ALL	2	15G	G15_010		Non-Converged Contingency	956	994	0.19121	-	G14-074T 345.00 - OKLAUNION 345KV CKT 1
FDNSLock-Blown up	06ALL	2	15G	G15_010		Non-Converged Contingency	956	994	0.19121	-	G14-074T 345.00 - TUCO INTERCHANGE 345KV CKT 1
FDNSLock-Blown up	06ALL	2	15G	G15_010		Non-Converged Contingency	956	1052	0.15997	-	G14_038T 345.00 - Hitchland Interchange 345KV CKT 1
FDNSLock-Blown up	06ALL	2	15G	G15_010		Non-Converged Contingency	956	1052	0.15997	-	G14_038T 345.00 - POTTER COUNTY INTERCHANGE 345KV CKT 1
FDNSLock-Blown up	06ALL	2	15G	G15_010		Non-Converged Contingency	560	560	0.15997	-	POTTER COUNTY INTERCHANGE (WAUK 90343-A) 345/230/13.2KV TRANSFORMER CKT 1
FDNSLock-Blown up	06ALL	2	15G	G15_010		Non-Converged Contingency	1420	1775	0.14907	-	BORDER 7345.00 - TUCO_2 345.00 345KV CKT 1
FDNSLock-Blown up	06ALL	2	15G	G15_010		Non-Converged Contingency	1420	1775	0.14907	-	BORDER 7345.00 - TUCO_2 345.00 345KV CKT 2
FDNSLock-Blown up	06ALL	2	15SP	G15_010		Non-Converged Contingency	956	994	0.19691	-	G14-074T 345.00 - OKLAUNION 345KV CKT 1
FDNSLock-Blown up	06ALL	2	15WP	G15_010		Non-Converged Contingency	1033	1071	0.20201	-	G14-074T 345.00 - OKLAUNION 345KV CKT 1
FDNSLock-Blown up	06ALL	3	15G	G15_010		Non-Converged Contingency	0	0	0.46133	-	SPSCONT-02X
FDNSLock-Blown up	06ALL	3	15G	G15_010		Non-Converged Contingency	956	1052	0.23066	-	G14_038T 345.00 - Hitchland Interchange 345KV CKT 1
FDNSLock-Blown up	06ALL	3	15G	G15_010		Non-Converged Contingency	956	1052	0.23066	-	G14_038T 345.00 - POTTER COUNTY INTERCHANGE 345KV CKT 1
FDNSLock-Blown up	06ALL	3	15G	G15_010		Non-Converged Contingency	956	994	0.16762	-	G14-074T 345.00 - OKLAUNION 345KV CKT 1
FDNS	06ALL	0	15G	G15_010	TO->FROM	AMOCO SWITCHING STATION - YOAKUM COUNTY INTERCHANGE 230KV CKT 1	319	351	0.03563	104.8902	BASE CASE
FDNS	06ALL	0	15G	G15_010	TO->FROM	CARGILL SUB - DEAF SMITH REC-#24 115KV CKT 1	96	96	0.06965	105.5446	BASE CASE
FDNS	06ALL	0	15SP	G15_010	TO->FROM	CARGILL SUB - DEAF SMITH REC-#24 115KV CKT 1	96	96	0.06987	101.5046	BASE CASE
FDNS	06ALL	0	15SP	G15_010	FROM->TO	CURRY COUNTY INTERCHANGE - DEAF SMITH REC-#20 115KV CKT 1	96	96	0.06987	134.4755	BASE CASE
FDNS	06ALL	0	15G	G15_010	FROM->TO	CURRY COUNTY INTERCHANGE - DEAF SMITH REC-#20 115KV CKT 1	96	96	0.06965	128.1788	BASE CASE
FDNS	06ALL	0	20SP	G15_010	FROM->TO	CURRY COUNTY INTERCHANGE - DEAF SMITH REC-#20 115KV CKT 1	96	96	0.06869	125.174	BASE CASE
FDNS	06ALL	0	25SP	G15_010	FROM->TO	CURRY COUNTY INTERCHANGE - DEAF SMITH REC-#20 115KV CKT 1	96	96	0.06887	117.7445	BASE CASE
FDNS	06ALL	0	15SP	G15_010	FROM->TO	DEAF SMITH REC-#20 - PARMER COUNTY SUB 115KV CKT 1	96	96	0.06987	121.3248	BASE CASE
FDNS	06ALL	0	15G	G15_010	FROM->TO	DEAF SMITH REC-#20 - PARMER COUNTY SUB 115KV CKT 1	96	96	0.06965	119.1935	BASE CASE
FDNS	06ALL	0	20SP	G15_010	FROM->TO	DEAF SMITH REC-#20 - PARMER COUNTY SUB 115KV CKT 1	96	96	0.06869	109.5934	BASE CASE
FDNS	06ALL	0	15G	G15_010	TO->FROM	DEAF SMITH REC-#24 - PARMER COUNTY SUB 115KV CKT 1	96	96	0.06965	113.7704	BASE CASE
FDNS	06ALL	0	15SP	G15_010	TO->FROM	DEAF SMITH REC-#24 - PARMER COUNTY SUB 115KV CKT 1	96	96	0.06987	113.2753	BASE CASE
FDNS	06ALL	0	20SP	G15_010	TO->FROM	DEAF SMITH REC-#24 - PARMER COUNTY SUB 115KV CKT 1	96	96	0.06869	101.2457	BASE CASE
FDNS	06ALL	0	15SP	G15_010	FROM->TO	ELK CITY 230KV (ELKCTY-6) 230/138/13.8KV TRANSFORMER CKT 1	272	316	0.06343	125.7575	BASE CASE
FDNS	06ALL	0	15SP	G15_010	FROM->TO	ELK CITY 230KV (ELKCTY-6) 230/138/13.8KV TRANSFORMER CKT 1	272	316	0.06343	124.0328	BASE CASE
FDNS	06ALL	0	15G	G15_010	FROM->TO	ELK CITY 230KV (ELKCTY-6) 230/138/13.8KV TRANSFORMER CKT 1	287	316	0.05834	112.017	BASE CASE
FDNS	06ALL	0	15G	G15_010	FROM->TO	ELK CITY 230KV (ELKCTY-6) 230/138/13.8KV TRANSFORMER CKT 1	287	316	0.05834	110.2834	BASE CASE
FDNS	06ALL	0	15WP	G15_010	FROM->TO	ELK CITY 230KV (ELKCTY-6) 230/138/13.8KV TRANSFORMER CKT 1	287	316	0.06525	107.7723	BASE CASE
FDNS	06ALL	0	15WP	G15_010	FROM->TO	ELK CITY 230KV (ELKCTY-6) 230/138/13.8KV TRANSFORMER CKT 1	287	316	0.06525	106.4302	BASE CASE
FDNS	06ALL	0	20WP	G15_010	TO->FROM	GRAPEVINE INTERCHANGE - NICHOLS STATION 230KV CKT 1	329	361	0.08736	121.1428	BASE CASE
FDNS	06ALL	0	15G	G15_010	TO->FROM	GRAPEVINE INTERCHANGE - NICHOLS STATION 230KV CKT 1	319	351	0.06124	105.2692	BASE CASE
FDNS	06ALL	0	20SP	G15_010	TO->FROM	GRAPEVINE INTERCHANGE - NICHOLS STATION 230KV CKT 1	319	351	0.08923	99.5	BASE CASE
FDNS	06ALL	0	15SP	G15_010	TO->FROM	NEWHART 230 - PLANT X STATION 230KV CKT 1	478	502	0.24718	131.4399	DEAF SMITH COUNTY INTERCHANGE - G14-068T 230.00 230KV CKT 1
FDNS	06ALL	0	15SP	G15_010	TO->FROM	NEWHART 230 - PLANT X STATION 230KV CKT 1	478	502	0.26819	125.803	TOLK STATION EAST - TUCO INTERCHANGE 230KV CKT 1
FDNS	06ALL	0	15SP	G15_010	TO->FROM	NEWHART 230 - PLANT X STATION 230KV CKT 1	478	502	0.24752	112.8584	BUSHLAND INTERCHANGE - DEAF SMITH COUNTY INTERCHANGE 230KV CKT 1
FDNS	06ALL	0	15SP	G15_010	TO->FROM	NEWHART 230 - PLANT X STATION 230KV CKT 1	478	502	0.22375	105.469	SUNDOWN INTERCHANGE - WOLFFORTH INTERCHANGE 230KV CKT 1
FDNS	06ALL	0	15SP	G15_010	TO->FROM	NEWHART 230 - PLANT X STATION 230KV CKT 1	478	502	0.21172	104.6456	PLANT X STATION (WH ALM20171) 230/115/13.2KV TRANSFORMER CKT 1
FDNS	06ALL	0	15SP	G15_010	TO->FROM	NEWHART 230 - PLANT X STATION 230KV CKT 1	478	502	0.22508	102.0972	BUSHLAND INTERCHANGE - POTTER COUNTY INTERCHANGE 230KV CKT 1
FDNS	06ALL	0	15SP	G15_010	TO->FROM	NEWHART 230 - PLANT X STATION 230KV CKT 1	478	502	0.2184	101.3263	LUBBOCK SOUTH INTERCHANGE - WOLFFORTH INTERCHANGE 230KV CKT 1
FDNS	06ALL	0	20SP	G15_010	TO->FROM	NEWHART 230 - PLANT X STATION 230KV CKT 1	478	502	0.23188	100	DEAF SMITH COUNTY INTERCHANGE - G14-068T 230.00 230KV CKT 1
FDNS	06ALL	0	20SP	G15_010	TO->FROM	NEWHART 230 - PLANT X STATION 230KV CKT 1	478	502	0.23188	100	G14-068T 230.00 - PLANT X STATION 230KV CKT 1
FDNS	06ALL	0	25SP	G15_010	TO->FROM	PLANT X STATION - TOLK STATION EAST 230KV CKT 2	478	502	0.22781	109.5875	SPP-SWPS-06
FDNS	06ALL	0	20SP	G15_010	TO->FROM	PLANT X STATION - TOLK STATION EAST 230KV CKT 2	478	502	0.22782	107.1008	SPP-SWPS-06
FDNS	06ALL	0	15SP	G15_010	TO->FROM	PLANT X STATION - TOLK STATION EAST 230KV CKT 2	478	502	0.22006	101.1924	PLANT X STATION - TOLK STATION WEST 230KV CKT 1
FDNS	06ALL	0	15SP	G15_010	TO->FROM	PLANT X STATION - TOLK STATION EAST 230KV CKT 2	478	502	0.22006	101.1924	PLANT X STATION - TOLK STATION WEST 230KV CKT 2
FDNS	06ALL	0	15SP	G15_010	TO->FROM	PLANT X STATION - TOLK STATION WEST 230KV CKT 1	478	502	0.22947	105.4413	PLANT X STATION - TOLK STATION WEST 230KV CKT 2

SOLUTION	GROUP	SCENARIO	SEASON	SOURCE	DIRECTION	MONITORED ELEMENT	RATEA (MVA)	RATEB(MVA)	TDF	TC%LOADING (% MVA)	CONTINGENCY
FDNS	06ALL	0	15SP	G15_010	TO->FROM	PLANT X STATION - TOLK STATION WEST 230KV CKT 1	478	502	0.22512	103.5304	PLANT X STATION - TOLK STATION EAST 230KV CKT 2
FDNS	06ALL	0	15SP	G15_010	TO->FROM	PLANT X STATION - TOLK STATION WEST 230KV CKT 1	478	502	0.21615	100.6793	TOLK STATION EAST - TUCO INTERCHANGE 230KV CKT 1
FDNS	06ALL	0	15SP	G15_010	TO->FROM	PLANT X STATION - TOLK STATION WEST 230KV CKT 2	478	502	0.22947	105.4413	PLANT X STATION - TOLK STATION WEST 230KV CKT 1
FDNS	06ALL	0	15SP	G15_010	TO->FROM	PLANT X STATION - TOLK STATION WEST 230KV CKT 2	478	502	0.22512	103.5304	PLANT X STATION - TOLK STATION EAST 230KV CKT 2
FDNS	06ALL	0	15SP	G15_010	TO->FROM	PLANT X STATION - TOLK STATION WEST 230KV CKT 2	478	502	0.21615	100.6793	TOLK STATION EAST - TUCO INTERCHANGE 230KV CKT 1
FDNS	06ALL	0	15G	G15_010	FROM->TO	TERRY COUNTY INTERCHANGE - WOLFFORTH INTERCHANGE 115KV CKT 1	120	154	0.03921	108.5207	BASE CASE
FDNS	06ALL	0	15SP	G15_010	FROM->TO	TOLK STATION EAST - TUCO INTERCHANGE 230KV CKT 1	478	502	0.28872	117.9185	NEWHART 230 - PLANT X STATION 230KV CKT 1
FDNS	06ALL	0	15SP	G15_010	FROM->TO	TOLK STATION EAST - TUCO INTERCHANGE 230KV CKT 1	478	502	0.26356	110.5721	DEAF SMITH COUNTY INTERCHANGE - G14-068T 230.00 230KV CKT 1
FDNS	06ALL	0	15SP	G15_010	FROM->TO	TOLK STATION EAST - TUCO INTERCHANGE 230KV CKT 1	478	502	0.27683	108.8842	SUNDOWN INTERCHANGE - WOLFFORTH INTERCHANGE 230KV CKT 1
FDNS	06ALL	0	15SP	G15_010	FROM->TO	TOLK STATION EAST - TUCO INTERCHANGE 230KV CKT 1	478	502	0.26858	102.2896	LUBBOCK SOUTH INTERCHANGE - WOLFFORTH INTERCHANGE 230KV CKT 1
FDNS	06ALL	0	15SP	G15_010	FROM->TO	TOLK STATION EAST - TUCO INTERCHANGE 230KV CKT 1	478	502	0.26952	102.1725	BUSHLAND INTERCHANGE - DEAF SMITH COUNTY INTERCHANGE 230KV CKT 1
FDNS	06ALL	0	15SP	G15_010	FROM->TO	TUCO INTERCHANGE - TUCO_2 230.00 230KV CKT 1	478	502	0.21883	171.3069	TUCO INTERCHANGE - TUCO_2 345.00 345KV CKT 1
FDNS	06ALL	0	15WP	G15_010	FROM->TO	TUCO INTERCHANGE - TUCO_2 230.00 230KV CKT 1	557	557	0.22541	134.3573	TUCO INTERCHANGE - TUCO_2 345.00 345KV CKT 1
FDNS	06ALL	0	15WP	G15_010	FROM->TO	TUCO INTERCHANGE (GE M1022338) 345/230/13.2KV TRANSFORMER CKT 1	560	560	0.26081	123.6189	TUCO INTERCHANGE (SIEM 8743066) 345/230/13.2KV TRANSFORMER CKT 2
FDNS	06ALL	0	15WP	G15_010	FROM->TO	TUCO INTERCHANGE (GE M1022338) 345/230/13.2KV TRANSFORMER CKT 1	560	560	0.26081	121.7966	TUCO INTERCHANGE (SIEM 8743066) 345/230/13.2KV TRANSFORMER CKT 2
FDNS	06ALL	0	15WP	G15_010	FROM->TO	TUCO INTERCHANGE (GE M1022338) 345/230/13.2KV TRANSFORMER CKT 1	560	560	0.25673	120.4848	TUCO_2 345.00 (TUCO_2 XFMR) 345/230/13.2KV TRANSFORMER CKT 1
FDNS	06ALL	0	15WP	G15_010	FROM->TO	TUCO INTERCHANGE (GE M1022338) 345/230/13.2KV TRANSFORMER CKT 1	560	560	0.25673	118.8811	TUCO_2 345.00 (TUCO_2 XFMR) 345/230/13.2KV TRANSFORMER CKT 1
FDNS	06ALL	0	15SP	G15_010	FROM->TO	TUCO INTERCHANGE (GE M1022338) 345/230/13.2KV TRANSFORMER CKT 1	560	560	0.25406	113.3311	TUCO INTERCHANGE (SIEM 8743066) 345/230/13.2KV TRANSFORMER CKT 2
FDNS	06ALL	0	15WP	G15_010	FROM->TO	TUCO INTERCHANGE (GE M1022338) 345/230/13.2KV TRANSFORMER CKT 1	560	560	0.22701	112.9697	TUCO INTERCHANGE - TUCO_2 230.00 230KV CKT 1
FDNS	06ALL	0	15WP	G15_010	FROM->TO	TUCO INTERCHANGE (GE M1022338) 345/230/13.2KV TRANSFORMER CKT 1	560	560	0.22701	111.3776	TUCO INTERCHANGE - TUCO_2 230.00 230KV CKT 1
FDNS	06ALL	0	15SP	G15_010	FROM->TO	TUCO INTERCHANGE (GE M1022338) 345/230/13.2KV TRANSFORMER CKT 1	560	560	0.25406	111.3719	TUCO INTERCHANGE (SIEM 8743066) 345/230/13.2KV TRANSFORMER CKT 2
FDNS	06ALL	0	15SP	G15_010	FROM->TO	TUCO INTERCHANGE (GE M1022338) 345/230/13.2KV TRANSFORMER CKT 1	560	560	0.25017	110.0342	TUCO_2 345.00 (TUCO_2 XFMR) 345/230/13.2KV TRANSFORMER CKT 1
FDNS	06ALL	0	15SP	G15_010	FROM->TO	TUCO INTERCHANGE (GE M1022338) 345/230/13.2KV TRANSFORMER CKT 1	560	560	0.25017	108.332	TUCO_2 345.00 (TUCO_2 XFMR) 345/230/13.2KV TRANSFORMER CKT 1
FDNS	06ALL	0	15SP	G15_010	FROM->TO	TUCO INTERCHANGE (GE M1022338) 345/230/13.2KV TRANSFORMER CKT 1	560	560	0.22078	107.9073	TUCO INTERCHANGE - TUCO_2 230.00 230KV CKT 1
FDNS	06ALL	0	15SP	G15_010	FROM->TO	TUCO INTERCHANGE (GE M1022338) 345/230/13.2KV TRANSFORMER CKT 1	560	560	0.22078	105.9346	TUCO INTERCHANGE - TUCO_2 230.00 230KV CKT 1
FDNS	06ALL	0	15SP	G15_010	FROM->TO	TUCO_2 345.00 (TUCO_2 XFMR) 345/230/13.2KV TRANSFORMER CKT 1	560	560	0.26788	145.8188	TUCO INTERCHANGE - TUCO_2 345.00 345KV CKT 1
FDNS	06ALL	0	15SP	G15_010	FROM->TO	TUCO_2 345.00 (TUCO_2 XFMR) 345/230/13.2KV TRANSFORMER CKT 1	560	560	0.26788	142.7342	TUCO INTERCHANGE - TUCO_2 345.00 345KV CKT 1
FDNS	06ALL	0	15WP	G15_010	FROM->TO	TUCO_2 345.00 (TUCO_2 XFMR) 345/230/13.2KV TRANSFORMER CKT 1	560	560	0.27476	138.8622	TUCO INTERCHANGE - TUCO_2 345.00 345KV CKT 1
FDNS	06ALL	0	15WP	G15_010	FROM->TO	TUCO_2 345.00 (TUCO_2 XFMR) 345/230/13.2KV TRANSFORMER CKT 1	560	560	0.27476	136.3817	TUCO INTERCHANGE - TUCO_2 345.00 345KV CKT 1
FDNS	06ALL	0	15WP	G15_010	FROM->TO	TUCO_2 345.00 (TUCO_2 XFMR) 345/230/13.2KV TRANSFORMER CKT 1	560	560	0.23748	109.7547	TUCO INTERCHANGE (GE M1022338) 345/230/13.2KV TRANSFORMER CKT 1
FDNS	06ALL	0	15WP	G15_010	FROM->TO	TUCO_2 345.00 (TUCO_2 XFMR) 345/230/13.2KV TRANSFORMER CKT 1	560	560	0.23748	108.6761	TUCO INTERCHANGE (GE M1022338) 345/230/13.2KV TRANSFORMER CKT 1
FDNS	06ALL	0	15WP	G15_010	FROM->TO	TUCO_2 345.00 (TUCO_2 XFMR) 345/230/13.2KV TRANSFORMER CKT 1	560	560	0.22272	102.7663	TUCO INTERCHANGE (SIEM 8743066) 345/230/13.2KV TRANSFORMER CKT 2
FDNS	06ALL	0	15WP	G15_010	FROM->TO	TUCO_2 345.00 (TUCO_2 XFMR) 345/230/13.2KV TRANSFORMER CKT 1	560	560	0.22272	101.7947	TUCO INTERCHANGE (SIEM 8743066) 345/230/13.2KV TRANSFORMER CKT 2
FDNS	06ALL	0	15SP	G15_010	FROM->TO	TUCO_2 345.00 (TUCO_2 XFMR) 345/230/13.2KV TRANSFORMER CKT 1	560	560	0.23153	99.6	TUCO INTERCHANGE (GE M1022338) 345/230/13.2KV TRANSFORMER CKT 1
FDNS	06ALL	2	15SP	G15_010	FROM->TO	CURRY COUNTY INTERCHANGE - DEAF SMITH REC-#20 115KV CKT 1	96	96	0.06694	123.9455	BASE CASE
FDNS	06ALL	2	20SP	G15_010	FROM->TO	CURRY COUNTY INTERCHANGE - DEAF SMITH REC-#20 115KV CKT 1	96	96	0.06625	116.2962	BASE CASE
FDNS	06ALL	2	25SP	G15_010	FROM->TO	CURRY COUNTY INTERCHANGE - DEAF SMITH REC-#20 115KV CKT 1	96	96	0.06642	112.3574	BASE CASE
FDNS	06ALL	2	15G	G15_010	FROM->TO	CURRY COUNTY INTERCHANGE - DEAF SMITH REC-#20 115KV CKT 1	96	96	0.06695	107.9018	BASE CASE
FDNS	06ALL	2	15SP	G15_010	FROM->TO	DEAF SMITH REC-#20 - PARMER COUNTY SUB 115KV CKT 1	96	96	0.06694	111.0308	BASE CASE
FDNS	06ALL	2	20SP	G15_010	FROM->TO	DEAF SMITH REC-#20 - PARMER COUNTY SUB 115KV CKT 1	96	96	0.06625	100.9761	BASE CASE
FDNS	06ALL	2	15SP	G15_010	TO->FROM	DEAF SMITH REC-#24 - PARMER COUNTY SUB 115KV CKT 1	96	96	0.06694	102.83	BASE CASE
FDNS	06ALL	2	15SP	G15_010	FROM->TO	ELK CITY 230KV (ELKCTY-6) 230/138/13.8KV TRANSFORMER CKT 1	272	316	0.06349	125.7818	BASE CASE
FDNS	06ALL	2	15SP	G15_010	FROM->TO	ELK CITY 230KV (ELKCTY-6) 230/138/13.8KV TRANSFORMER CKT 1	272	316	0.06349	124.4125	BASE CASE
FDNS	06ALL	2	15G	G15_010	FROM->TO	ELK CITY 230KV (ELKCTY-6) 230/138/13.8KV TRANSFORMER CKT 1	287	316	0.05888	111.2694	BASE CASE
FDNS	06ALL	2	15G	G15_010	FROM->TO	ELK CITY 230KV (ELKCTY-6) 230/138/13.8KV TRANSFORMER CKT 1	287	316	0.05888	110.3238	BASE CASE
FDNS	06ALL	2	15WP	G15_010	FROM->TO	ELK CITY 230KV (ELKCTY-6) 230/138/13.8KV TRANSFORMER CKT 1	287	316	0.06526	107.6385	BASE CASE
FDNS	06ALL	2	15WP	G15_010	FROM->TO	ELK CITY 230KV (ELKCTY-6) 230/138/13.8KV TRANSFORMER CKT 1	287	316	0.06526	106.6339	BASE CASE
FDNS	06ALL	2	20SP	G15_010	FROM->TO	ELK CITY 230KV (ELKCTY-6) 230/138/13.8KV TRANSFORMER CKT 1	272	316	0.06361	103.949	BASE CASE
FDNS	06ALL	2	20SP	G15_010	FROM->TO	ELK CITY 230KV (ELKCTY-6) 230/138/13.8KV TRANSFORMER CKT 1	272	316	0.06361	103.7414	BASE CASE
FDNS	06ALL	2	20WP	G15_010	FROM->TO	ELK CITY 230KV (ELKCTY-6) 230/138/13.8KV TRANSFORMER CKT 1	287	316	0.06285	101.967	BASE CASE
FDNS	06ALL	2	20WP	G15_010	FROM->TO	ELK CITY 230KV (ELKCTY-6) 230/138/13.8KV TRANSFORMER CKT 1	287	316	0.06285	101.2457	BASE CASE
FDNS	06ALL	2	15SP	G15_010	TO->FROM	NEWHART 230 - PLANT X STATION 230KV CKT 1	478	502	0.21897	105.0168	DEAF SMITH COUNTY INTERCHANGE - G14-068T 230.00 230KV CKT 1
FDNS	06ALL	2	15SP	G15_010	TO->FROM	NEWHART 230 - PLANT X STATION 230KV CKT 1	478	502	0.21897	105.011	G14-068T 230.00 - PLANT X STATION 230KV CKT 1
FDNS	06ALL	2	15G	G15_010	TO->FROM	PLANT X STATION - TOLK STATION EAST 230KV CKT 2	478	502	0.21511	107.1471	SPP-SWPS-06
FDNS	06ALL	2	25SP	G15_010	TO->FROM	PLANT X STATION - TOLK STATION EAST 230KV CKT 2	478	502	0.21799	103.6394	SPP-SWPS-06
FDNS	06ALL	2	15G	G15_010	FROM->TO	TUCO INTERCHANGE - TUCO_2 230.00 230KV CKT 1	478	502	0.23779	200.4231	TUCO INTERCHANGE - TUCO_2 345.00 345KV CKT 1
FDNS	06ALL	2	15SP	G15_010	FROM->TO	TUCO INTERCHANGE - TUCO_2 230.00 230KV CKT 1	478	502	0.24452	183.8625	TUCO INTERCHANGE - TUCO_2 345.00 345KV CKT 1
FDNS	06ALL	2	15WP	G15_010	FROM->TO	TUCO INTERCHANGE - TUCO_2 230.00 230KV CKT 1	557	557	0.25159	142.2485	TUCO INTERCHANGE - TUCO_2 345.00 345KV CKT 1
FDNS	06ALL	2	20SP	G15_010	FROM->TO	TUCO INTERCHANGE - TUCO_2 230.00 230KV CKT 1	478	502	0.24827	137.8459	TUCO INTERCHANGE - TUCO_2 345.00 345KV CKT 1
FDNS	06ALL	2	15G	G15_010	FROM->TO	TUCO_2 345.00 (TUCO_2 XFMR) 345/230/13.2KV TRANSFORMER CKT 1	560	560	0.26706	167.6169	TUCO INTERCHANGE - TUCO_2 345.00 345KV CKT 1
FDNS	06ALL	2	15G	G15_010	FROM->TO	TUCO_2 345.00 (TUCO_2 XFMR) 345/230/13.2KV TRANSFORMER CKT 1	560	560	0.26706	164.2629	TUCO INTERCHANGE - TUCO_2 345.00 345KV CKT 1
FDNS	06ALL	2	15SP	G15_010	FROM->TO	TUCO_2 345.00 (TUCO_2 XFMR) 345/230/13.2KV TRANSFORMER CKT 1	560	560	0.27394	149.8147	TUCO INTERCHANGE - TUCO_2 345.00 345KV CKT 1
FDNS	06ALL	2	15SP	G15_010	FROM->TO	TUCO_2 345.00 (TUCO_2 XFMR) 345/230/13.2KV TRANSFORMER CKT 1	560	560	0.27394	147.216	TUCO INTERCHANGE - TUCO_2 345.00 345KV CKT 1
FDNS	06ALL	2	15WP	G15_010	FROM->TO	TUCO_2 345.00 (TUCO_2 XFMR) 345/230/13.2KV TRANSFORMER CKT 1	560	560	0.28063	141.8557	TUCO INTERCHANGE - TUCO_2 345.00 345KV CKT 1
FDNS	06ALL	2	15WP	G15_010	FROM->TO	TUCO_2 345.00 (TUCO_2 XFMR) 345/230/13.2KV TRANSFORMER CKT 1	560	560	0.28063	139.9334	TUCO INTERCHANGE - TUCO_2 345.00 345KV CKT 1
FDNS	06ALL	2	20SP	G15_010	FROM->TO	TUCO_2 345.00 (TUCO_2 XFMR) 345/230/13.2KV TRANSFORMER CKT 1	560	560	0.27493	112.3827	TUCO INTERCHANGE - TUCO_2 345.00 345KV CKT 1
FDNS	06ALL	2	20SP	G15_010	FROM->TO	TUCO_2 345.00 (TUCO_2 XFMR) 345/230/13.2KV TRANSFORMER CKT 1	560	560	0.27493	112.1069	TUCO INTERCHANGE - TUCO_2 345.00 345KV CKT 1
FDNS	06ALL	3	15SP	G15_010	FROM->TO	ELK CITY 230KV (ELKCTY-6) 230/138/13.8KV TRANSFORMER CKT 1	272	316	0.06117	123.9727	BASE CASE
FDNS	06ALL	3	15SP	G15_010	FROM->TO	ELK CITY 230KV (ELKCTY-6) 230/138/13.8KV TRANSFORMER CKT 1	272	316	0.06117	122.7526	BASE CASE
FDNS	06ALL	3	15G	G15_010	FROM->TO	ELK CITY 230KV (ELKCTY-6) 230/138/13.8KV TRANSFORMER CKT 1	287	316	0.05656	109.3338	BASE CASE
FDNS	06ALL	3	15G	G15_010	FROM->TO	ELK CITY 230KV (ELKCTY-6) 230/138/13.8KV TRANSFORMER CKT 1	287	316	0.05656	108.4212	BASE CASE
FDNS	06ALL	3	15WP	G15_010	FROM->TO	ELK CITY 230KV (ELKCTY-6) 230/138/13.8KV TRANSFORMER CKT 1	287	316	0.06294	106.1239	BASE CASE
FDNS	06ALL	3	15WP	G15_010	FROM->TO	ELK CITY 230KV (ELKCTY-6) 230/138/13.8KV TRANSFORMER CKT 1	287	316	0.06294	105.1628	BASE CASE
FDNS	06ALL	3	20SP	G15_010	FROM->TO	ELK CITY 230KV (ELKCTY-6) 230/138/13.8KV TRANSFORMER CKT 1	272	316	0.06118	102.7547	BASE CASE
FDNS	06ALL	3	20SP	G15_010	FROM->TO	ELK CITY 230KV (ELKCTY-6) 230/138/13.8KV TRANSFORMER CKT 1	272	316	0.06118	102.5743	BASE CASE

SOLUTION	GROUP	SCENARIO	SEASON	SOURCE	DIRECTION	MONITORED ELEMENT	RATEA (MVA)	RATEB(MVA)	TDF	TC%LOADING (% MVA)	CONTINGENCY
FDNS	06ALL	3	20WP	G15_010	FROM->TO	ELK CITY 230KV (ELKCTY-6) 230/138/13.8KV TRANSFORMER CKT 1	287	316	0.06048	100.8598	BASE CASE
FDNS	06ALL	3	20WP	G15_010	FROM->TO	ELK CITY 230KV (ELKCTY-6) 230/138/13.8KV TRANSFORMER CKT 1	287	316	0.06048	100.2492	BASE CASE
FDNS	06ALL	3	15G	G15_010	TO->FROM	GRAPEVINE INTERCHANGE - NICHOLS STATION 230KV CKT 1	319	351	0.06497	100.925	BASE CASE
FDNS	06ALL	3	15G	G15_010	FROM->TO	TUCO_2 345.00 (TUCO_2 XFMR) 345/230/13.2KV TRANSFORMER CKT 1	560	560	0.22296	151.8506	TUCO INTERCHANGE - TUCO_2 345.00 345KV CKT 1
FDNS	06ALL	3	15G	G15_010	FROM->TO	TUCO_2 345.00 (TUCO_2 XFMR) 345/230/13.2KV TRANSFORMER CKT 1	560	560	0.22296	149.0893	TUCO INTERCHANGE - TUCO_2 345.00 345KV CKT 1
FDNS	06ALL	3	15SP	G15_010	FROM->TO	TUCO_2 345.00 (TUCO_2 XFMR) 345/230/13.2KV TRANSFORMER CKT 1	560	560	0.22902	133.4173	TUCO INTERCHANGE - TUCO_2 345.00 345KV CKT 1
FDNS	06ALL	3	15SP	G15_010	FROM->TO	TUCO_2 345.00 (TUCO_2 XFMR) 345/230/13.2KV TRANSFORMER CKT 1	560	560	0.22902	131.8248	TUCO INTERCHANGE - TUCO_2 345.00 345KV CKT 1
FDNS	06ALL	3	15WP	G15_010	FROM->TO	TUCO_2 345.00 (TUCO_2 XFMR) 345/230/13.2KV TRANSFORMER CKT 1	560	560	0.23521	127.9846	TUCO INTERCHANGE - TUCO_2 345.00 345KV CKT 1
FDNS	06ALL	3	15WP	G15_010	FROM->TO	TUCO_2 345.00 (TUCO_2 XFMR) 345/230/13.2KV TRANSFORMER CKT 1	560	560	0.23521	126.6738	TUCO INTERCHANGE - TUCO_2 345.00 345KV CKT 1
FDNS	06ALL	3	20WP	G15_010	FROM->TO	TUCO_2 345.00 (TUCO_2 XFMR) 345/230/13.2KV TRANSFORMER CKT 1	560	560	0.22708	121.9391	TUCO INTERCHANGE - TUCO_2 345.00 345KV CKT 1
FDNS	06ALL	3	20WP	G15_010	FROM->TO	TUCO_2 345.00 (TUCO_2 XFMR) 345/230/13.2KV TRANSFORMER CKT 1	560	560	0.22708	121.0095	TUCO INTERCHANGE - TUCO_2 345.00 345KV CKT 1
FDNS	06ALL	3	20SP	G15_010	FROM->TO	TUCO_2 345.00 (TUCO_2 XFMR) 345/230/13.2KV TRANSFORMER CKT 1	560	560	0.22981	100.2304	TUCO INTERCHANGE - TUCO_2 345.00 345KV CKT 1
FDNS	06ALL	3	20SP	G15_010	FROM->TO	TUCO_2 345.00 (TUCO_2 XFMR) 345/230/13.2KV TRANSFORMER CKT 1	560	560	0.22981	100.1212	TUCO INTERCHANGE - TUCO_2 345.00 345KV CKT 1
FDNS	06ALL	4	15SP	G15_010	FROM->TO	CHISHOLM6 230.00 - ELK CITY 230KV 230KV CKT 1	353	353	0.06717	100.9254	BASE CASE
FDNS	06ALL	4	15SP	G15_010	FROM->TO	ELK CITY 230KV (ELKCTY-6) 230/138/13.8KV TRANSFORMER CKT 1	272	316	0.06717	129.8441	BASE CASE
FDNS	06ALL	4	15SP	G15_010	FROM->TO	ELK CITY 230KV (ELKCTY-6) 230/138/13.8KV TRANSFORMER CKT 1	272	316	0.06717	128.5805	BASE CASE
FDNS	06ALL	4	15G	G15_010	FROM->TO	ELK CITY 230KV (ELKCTY-6) 230/138/13.8KV TRANSFORMER CKT 1	287	316	0.06277	116.3182	BASE CASE
FDNS	06ALL	4	15G	G15_010	FROM->TO	ELK CITY 230KV (ELKCTY-6) 230/138/13.8KV TRANSFORMER CKT 1	287	316	0.06277	115.4161	BASE CASE
FDNS	06ALL	4	15WP	G15_010	FROM->TO	ELK CITY 230KV (ELKCTY-6) 230/138/13.8KV TRANSFORMER CKT 1	287	316	0.06909	112.0283	BASE CASE
FDNS	06ALL	4	15WP	G15_010	FROM->TO	ELK CITY 230KV (ELKCTY-6) 230/138/13.8KV TRANSFORMER CKT 1	287	316	0.06909	111.0401	BASE CASE
FDNS	06ALL	4	20SP	G15_010	FROM->TO	ELK CITY 230KV (ELKCTY-6) 230/138/13.8KV TRANSFORMER CKT 1	272	316	0.06716	107.1637	BASE CASE
FDNS	06ALL	4	20SP	G15_010	FROM->TO	ELK CITY 230KV (ELKCTY-6) 230/138/13.8KV TRANSFORMER CKT 1	272	316	0.06716	106.9127	BASE CASE
FDNS	06ALL	4	20WP	G15_010	FROM->TO	ELK CITY 230KV (ELKCTY-6) 230/138/13.8KV TRANSFORMER CKT 1	287	316	0.06645	106.7868	BASE CASE
FDNS	06ALL	4	20WP	G15_010	FROM->TO	ELK CITY 230KV (ELKCTY-6) 230/138/13.8KV TRANSFORMER CKT 1	287	316	0.06645	106.1189	BASE CASE
FDNS	06ALL	4	15G	G15_010	FROM->TO	POTTER COUNTY INTERCHANGE (WAUK 90343-A) 345/230/13.2KV TRANSFORMER CKT 1	560	560	0.20044	111.314	PLSNT_HILL7 345.00 - POTTER COUNTY INTERCHANGE 345KV CKT 1
FDNS	06ALL	4	15G	G15_010	FROM->TO	POTTER COUNTY INTERCHANGE (WAUK 90343-A) 345/230/13.2KV TRANSFORMER CKT 1	560	560	0.20044	111.0141	PLSNT_HILL7 345.00 - POTTER COUNTY INTERCHANGE 345KV CKT 1
FDNS	06ALL	5	15SP	G15_010	FROM->TO	CHISHOLM6 230.00 - ELK CITY 230KV 230KV CKT 1	353	353	0.06723	100.9761	BASE CASE
FDNS	06ALL	5	15SP	G15_010	FROM->TO	ELK CITY 230KV (ELKCTY-6) 230/138/13.8KV TRANSFORMER CKT 1	272	316	0.06723	129.9064	BASE CASE
FDNS	06ALL	5	15SP	G15_010	FROM->TO	ELK CITY 230KV (ELKCTY-6) 230/138/13.8KV TRANSFORMER CKT 1	272	316	0.06723	128.6412	BASE CASE
FDNS	06ALL	5	15G	G15_010	FROM->TO	ELK CITY 230KV (ELKCTY-6) 230/138/13.8KV TRANSFORMER CKT 1	287	316	0.06283	116.3419	BASE CASE
FDNS	06ALL	5	15G	G15_010	FROM->TO	ELK CITY 230KV (ELKCTY-6) 230/138/13.8KV TRANSFORMER CKT 1	287	316	0.06283	115.4406	BASE CASE
FDNS	06ALL	5	15WP	G15_010	FROM->TO	ELK CITY 230KV (ELKCTY-6) 230/138/13.8KV TRANSFORMER CKT 1	287	316	0.06915	112.0665	BASE CASE
FDNS	06ALL	5	15WP	G15_010	FROM->TO	ELK CITY 230KV (ELKCTY-6) 230/138/13.8KV TRANSFORMER CKT 1	287	316	0.06915	111.0777	BASE CASE
FDNS	06ALL	5	20SP	G15_010	FROM->TO	ELK CITY 230KV (ELKCTY-6) 230/138/13.8KV TRANSFORMER CKT 1	272	316	0.06721	107.1735	BASE CASE
FDNS	06ALL	5	20SP	G15_010	FROM->TO	ELK CITY 230KV (ELKCTY-6) 230/138/13.8KV TRANSFORMER CKT 1	272	316	0.06721	106.9225	BASE CASE
FDNS	06ALL	5	20WP	G15_010	FROM->TO	ELK CITY 230KV (ELKCTY-6) 230/138/13.8KV TRANSFORMER CKT 1	287	316	0.06651	106.7889	BASE CASE
FDNS	06ALL	5	20WP	G15_010	FROM->TO	ELK CITY 230KV (ELKCTY-6) 230/138/13.8KV TRANSFORMER CKT 1	287	316	0.06651	106.1215	BASE CASE
FDNS	06ALL	5	15G	G15_010	FROM->TO	POTTER COUNTY INTERCHANGE (WAUK 90343-A) 345/230/13.2KV TRANSFORMER CKT 1	560	560	0.20037	111.2115	PLSNT_HILL7 345.00 - POTTER COUNTY INTERCHANGE 345KV CKT 1
FDNS	06ALL	5	15G	G15_010	FROM->TO	POTTER COUNTY INTERCHANGE (WAUK 90343-A) 345/230/13.2KV TRANSFORMER CKT 1	560	560	0.20037	110.9126	PLSNT_HILL7 345.00 - POTTER COUNTY INTERCHANGE 345KV CKT 1
FDNS	00NR	0	15WP	G15_013	FROM->TO	FPL SWITCH - MOORELAND 138KV CKT 1	287	287	0.08554	128.8246	NORTHWEST - TATONGA7 345.00 345KV CKT 1
FDNS	00NR	0	15WP	G15_013	FROM->TO	FPL SWITCH - MOORELAND 138KV CKT 1	287	287	0.08554	126.7097	SPSCONT-05B
FDNS	00NR	0	15WP	G15_013	FROM->TO	FPL SWITCH - MOORELAND 138KV CKT 1	287	287	0.08554	125.9533	SPSCONT-04
FDNS	00NR	0	20WP	G15_013	FROM->TO	FPL SWITCH - MOORELAND 138KV CKT 1	287	287	0.08641	123.0259	NORTHWEST - TATONGA7 345.00 345KV CKT 1
FDNS	00NR	0	20WP	G15_013	FROM->TO	FPL SWITCH - MOORELAND 138KV CKT 1	287	287	0.08641	121.0629	SPSCONT-05B
FDNS	00NR	0	20WP	G15_013	FROM->TO	FPL SWITCH - MOORELAND 138KV CKT 1	287	287	0.08641	120.5043	SPSCONT-04
FDNS	00NR	0	15WP	G15_013	FROM->TO	FPL SWITCH - MOORELAND 138KV CKT 1	287	287	0.08554	117.9477	G11_051T 345.00 - TATONGA7 345.00 345KV CKT 1
FDNS	00NR	0	20WP	G15_013	FROM->TO	FPL SWITCH - MOORELAND 138KV CKT 1	287	287	0.08641	112.5317	G11_051T 345.00 - TATONGA7 345.00 345KV CKT 1
FDNS	00NR	0	15WP	G15_013	FROM->TO	FPL SWITCH - MOORELAND 138KV CKT 1	287	287	0.08554	111.8675	G11_051T 345.00 - WOODWARD DISTRICT EHV 345KV CKT 1
FDNS	00NR	0	15WP	G15_013	FROM->TO	FPL SWITCH - MOORELAND 138KV CKT 1	287	287	0.08554	109.9783	SPSCONT-05AX
FDNS	00NR	0	15SP	G15_013	FROM->TO	FPL SWITCH - MOORELAND 138KV CKT 1	287	287	0.09542	108.4294	NORTHWEST - TATONGA7 345.00 345KV CKT 1
FDNS	00NR	0	20WP	G15_013	FROM->TO	FPL SWITCH - MOORELAND 138KV CKT 1	287	287	0.08641	106.8226	G11_051T 345.00 - WOODWARD DISTRICT EHV 345KV CKT 1
FDNS	00NR	0	15SP	G15_013	FROM->TO	FPL SWITCH - MOORELAND 138KV CKT 1	287	287	0.09542	106.4984	SPSCONT-05B
FDNS	00NR	0	15SP	G15_013	FROM->TO	FPL SWITCH - MOORELAND 138KV CKT 1	287	287	0.09542	105.9047	SPSCONT-04
FDNS	00NR	0	20WP	G15_013	FROM->TO	FPL SWITCH - MOORELAND 138KV CKT 1	287	287	0.08641	105.0294	SPSCONT-05AX
FDNS	00NR	0	15WP	G15_013	FROM->TO	FPL SWITCH - MOORELAND 138KV CKT 1	287	287	0.09452	102.1532	WOODWARD (WOODWRD2) 138/69/13.2KV TRANSFORMER CKT 1
FDNS	00NR	0	20WP	G15_013	FROM->TO	FPL SWITCH - MOORELAND 138KV CKT 1	287	287	0.09605	102.0903	WOODWARD (WOODWRD2) 138/69/13.2KV TRANSFORMER CKT 1
FDNS	00NR	0	15WP	G15_013	FROM->TO	FPL SWITCH - MOORELAND 138KV CKT 1	287	287	0.08653	101.4847	G14-074T 345.00 - OKLAUNION 345KV CKT 1
FDNS	00NR	0	15WP	G15_013	FROM->TO	FPL SWITCH - MOORELAND 138KV CKT 1	287	287	0.08347	101.4429	ELK CITY 230KV (ELKCTY-6) 230/138/13.8KV TRANSFORMER CKT 1
FDNS	00NR	0	15WP	G15_013	FROM->TO	FPL SWITCH - MOORELAND 138KV CKT 1	287	287	0.08347	101.4423	ELK CITY 230KV - SWEETWATER 230KV CKT 1
FDNS	00NR	0	15WP	G15_013	FROM->TO	FPL SWITCH - MOORELAND 138KV CKT 1	287	287	0.09034	99.7	IODINE - WOODWARD EHV 138KV CKT 1
FDNS	00NR	0	15WP	G15_013	TO->FROM	FPL SWITCH - WOODWARD 138KV CKT 1	287	287	0.08554	123.2798	NORTHWEST - TATONGA7 345.00 345KV CKT 1
FDNS	00NR	0	15WP	G15_013	TO->FROM	FPL SWITCH - WOODWARD 138KV CKT 1	287	287	0.08554	121.2252	SPSCONT-05B
FDNS	00NR	0	15WP	G15_013	TO->FROM	FPL SWITCH - WOODWARD 138KV CKT 1	287	287	0.08554	120.4221	SPSCONT-04
FDNS	00NR	0	20WP	G15_013	TO->FROM	FPL SWITCH - WOODWARD 138KV CKT 1	287	287	0.08641	117.3514	NORTHWEST - TATONGA7 345.00 345KV CKT 1
FDNS	00NR	0	20WP	G15_013	TO->FROM	FPL SWITCH - WOODWARD 138KV CKT 1	287	287	0.08641	115.451	SPSCONT-05B
FDNS	00NR	0	20WP	G15_013	TO->FROM	FPL SWITCH - WOODWARD 138KV CKT 1	287	287	0.08641	114.8472	SPSCONT-04
FDNS	00NR	0	15WP	G15_013	TO->FROM	FPL SWITCH - WOODWARD 138KV CKT 1	287	287	0.08554	112.5173	G11_051T 345.00 - TATONGA7 345.00 345KV CKT 1
FDNS	00NR	0	20WP	G15_013	TO->FROM	FPL SWITCH - WOODWARD 138KV CKT 1	287	287	0.08641	106.9374	G11_051T 345.00 - TATONGA7 345.00 345KV CKT 1
FDNS	00NR	0	15WP	G15_013	TO->FROM	FPL SWITCH - WOODWARD 138KV CKT 1	287	287	0.08554	106.5001	G11_051T 345.00 - WOODWARD DISTRICT EHV 345KV CKT 1
FDNS	00NR	0	15WP	G15_013	TO->FROM	FPL SWITCH - WOODWARD 138KV CKT 1	287	287	0.08554	104.6788	SPSCONT-05AX
FDNS	00NR	0	15SP	G15_013	TO->FROM	FPL SWITCH - WOODWARD 138KV CKT 1	287	287	0.09542	103.9454	NORTHWEST - TATONGA7 345.00 345KV CKT 1
FDNS	00NR	0	15SP	G15_013	TO->FROM	FPL SWITCH - WOODWARD 138KV CKT 1	287	287	0.09542	102.141	SPSCONT-05B
FDNS	00NR	0	15SP	G15_013	TO->FROM	FPL SWITCH - WOODWARD 138KV CKT 1	287	287	0.09542	101.4537	SPSCONT-04
FDNS	00NR	0	20WP	G15_013	TO->FROM	FPL SWITCH - WOODWARD 138KV CKT 1	287	287	0.08641	101.2843	G11_051T 345.00 - WOODWARD DISTRICT EHV 345KV CKT 1
FDNS	00NR	0	20WP	G15_013	TO->FROM	FPL SWITCH - WOODWARD 138KV CKT 1	287	287	0.08641	99.6	SPSCONT-05AX

SOLUTION	GROUP	SCENARIO	SEASON	SOURCE	DIRECTION	MONITORED ELEMENT	RATEA (MVA)	RATEB(MVA)	TDF	TC%LOADING (% MVA)	CONTINGENCY
FDNS	00NR	0	15WP	G15_013	TO->FROM	WOODWARD - WOODWARD EHV 138KV CKT 1	287	287	0.06527	110.3789	SPSCONT-05B
FDNS	00NR	0	15WP	G15_013	TO->FROM	WOODWARD - WOODWARD EHV 138KV CKT 1	287	287	0.06527	106.9529	NORTHWEST - TATONGA7 345.00 345KV CKT 1
FDNS	00NR	0	20WP	G15_013	TO->FROM	WOODWARD - WOODWARD EHV 138KV CKT 1	287	287	0.06583	105.7868	SPSCONT-05B
FDNS	00NR	0	15WP	G15_013	TO->FROM	WOODWARD - WOODWARD EHV 138KV CKT 1	287	287	0.06527	104.6838	SPSCONT-04
FDNS	00NR	0	20WP	G15_013	TO->FROM	WOODWARD - WOODWARD EHV 138KV CKT 1	287	287	0.06583	102.1903	NORTHWEST - TATONGA7 345.00 345KV CKT 1
FDNS	00NR	0	20WP	G15_013	TO->FROM	WOODWARD - WOODWARD EHV 138KV CKT 1	287	287	0.06583	100.2066	SPSCONT-04
FDNS	00NR	0	15WP	G15_013	TO->FROM	WOODWARD - WOODWARD EHV 138KV CKT 1	287	287	0.09541	99.8	WOODWARD - WOODWARD EHV 138KV CKT 2
FDNS	00NR	0	20WP	G15_013	FROM->TO	WOODWARD (WOODWRD2) 138/69/13.2KV TRANSFORMER CKT 1	123	134	0.0312	107.9405	FPL SWITCH - MOORELAND 138KV CKT 1
FDNS	00NR	0	15SP	G15_013	FROM->TO	WOODWARD (WOODWRD2) 138/69/13.2KV TRANSFORMER CKT 1	123	134	0.03466	106.7278	FPL SWITCH - MOORELAND 138KV CKT 1
FDNS	00NR	0	15WP	G15_013	FROM->TO	WOODWARD (WOODWRD2) 138/69/13.2KV TRANSFORMER CKT 1	123	134	0.03089	106.5138	FPL SWITCH - MOORELAND 138KV CKT 1
FDNS	00NR	0	20WP	G15_013	FROM->TO	WOODWARD (WOODWRD2) 138/69/13.2KV TRANSFORMER CKT 1	123	134	0.0312	105.6335	FPL SWITCH - MOORELAND 138KV CKT 1
FDNS	00NR	0	20WP	G15_013	FROM->TO	WOODWARD (WOODWRD2) 138/69/13.2KV TRANSFORMER CKT 1	123	134	0.0312	104.6138	FPL SWITCH - WOODWARD 138KV CKT 1
FDNS	00NR	0	15SP	G15_013	FROM->TO	WOODWARD (WOODWRD2) 138/69/13.2KV TRANSFORMER CKT 1	123	134	0.03466	104.5966	FPL SWITCH - MOORELAND 138KV CKT 1
FDNS	00NR	0	15WP	G15_013	FROM->TO	WOODWARD (WOODWRD2) 138/69/13.2KV TRANSFORMER CKT 1	123	134	0.03089	103.7864	FPL SWITCH - MOORELAND 138KV CKT 1
FDNS	00NR	0	15SP	G15_013	FROM->TO	WOODWARD (WOODWRD2) 138/69/13.2KV TRANSFORMER CKT 1	123	134	0.03466	103.3641	FPL SWITCH - WOODWARD 138KV CKT 1
FDNS	00NR	0	15WP	G15_013	FROM->TO	WOODWARD (WOODWRD2) 138/69/13.2KV TRANSFORMER CKT 1	123	134	0.03089	103.3362	FPL SWITCH - WOODWARD 138KV CKT 1
FDNS	00NR	0	20WP	G15_013	FROM->TO	WOODWARD (WOODWRD2) 138/69/13.2KV TRANSFORMER CKT 1	123	134	0.0312	102.2481	FPL SWITCH - WOODWARD 138KV CKT 1
FDNS	00NR	0	15SP	G15_013	FROM->TO	WOODWARD (WOODWRD2) 138/69/13.2KV TRANSFORMER CKT 1	123	134	0.03466	101.1099	FPL SWITCH - WOODWARD 138KV CKT 1
FDNS	00NR	0	20SP	G15_013	FROM->TO	WOODWARD (WOODWRD2) 138/69/13.2KV TRANSFORMER CKT 1	123	134	0.03403	100.8357	FPL SWITCH - MOORELAND 138KV CKT 1
FDNS	00NR	0	15WP	G15_013	FROM->TO	WOODWARD (WOODWRD2) 138/69/13.2KV TRANSFORMER CKT 1	123	134	0.03089	100.5381	FPL SWITCH - WOODWARD 138KV CKT 1
FDNSLock-Blown up	06ALL	0	15G	G15_014		Non-Converged Contingency	0	0	0.34456	-	SPP-SWPS-06
FDNSLock-Blown up	06ALL	0	15G	G15_014		Non-Converged Contingency	0	0	0.30518	-	SPSCONT-02X
FDNSLock-Blown up	06ALL	0	15G	G15_014		Non-Converged Contingency	319	351	0.26231	-	LUBBOCK SOUTH INTERCHANGE - WOLFFORTH INTERCHANGE 230KV CKT 1
FDNSLock-Blown up	06ALL	0	15G	G15_014		Non-Converged Contingency	319	351	0.24794	-	SUNDOWN INTERCHANGE - WOLFFORTH INTERCHANGE 230KV CKT 1
FDNSLock-Blown up	06ALL	0	15G	G15_014		Non-Converged Contingency	956	994	0.19466	-	G14-074T 345.00 - OKLAUNION 345KV CKT 1
FDNSLock-Blown up	06ALL	0	15G	G15_014		Non-Converged Contingency	956	994	0.19466	-	G14-074T 345.00 - TUCO INTERCHANGE 345KV CKT 1
FDNSLock-Blown up	06ALL	0	15G	G15_014		Non-Converged Contingency	956	994	0.19466	-	OKLAUNION 345KV SWITCHED SHUNT
FDNSLock-Blown up	06ALL	0	15G	G15_014		Non-Converged Contingency	0	0	0.18818	-	SPSCONT-05AX
FDNSLock-Blown up	06ALL	0	15G	G15_014		Non-Converged Contingency	560	560	0.18481	-	TUCO INTERCHANGE (GE M1022338) 345/230/13.2KV TRANSFORMER CKT 1
FDNSLock-Blown up	06ALL	0	15G	G15_014		Non-Converged Contingency	478	502	0.18417	-	JONES STATION - TUCO INTERCHANGE 230KV CKT 1
FDNSLock-Blown up	06ALL	0	15G	G15_014		Non-Converged Contingency	1195	1195	0.17322	-	GRACEMONT - MINCO 345KV CKT 1
FDNSLock-Blown up	06ALL	0	15G	G15_014		Non-Converged Contingency	560	644	0.16106	-	TUCO INTERCHANGE (SIEM 8743066) 345/230/13.2KV TRANSFORMER CKT 2
FDNSLock-Blown up	06ALL	0	15G	G15_014		Non-Converged Contingency	478	502	0.15707	-	NEWHART 230 - PLANT X STATION 230KV CKT 1
FDNSLock-Blown up	06ALL	0	15G	G15_014		Non-Converged Contingency	478	502	0.15584	-	TUCO INTERCHANGE - TUCO_2 230.00 230KV CKT 1
FDNSLock-Blown up	06ALL	0	15G	G15_014		Non-Converged Contingency	560	560	0.15576	-	TUCO_2 345.00 (TUCO_2 XFMR) 345/230/13.2KV TRANSFORMER CKT 1
FDNSLock-Blown up	06ALL	0	15G	G15_014		Non-Converged Contingency	1330	1940	0.15393	-	CHISHOLM7 345.00 - GRACEMONT 345KV CKT 1
FDNSLock-Blown up	06ALL	0	15G	G15_014		Non-Converged Contingency	1792	1792	0.15372	-	CHISHOLM7 345.00 - WOODWARD DISTRICT EHV 345KV CKT 1
FDNSLock-Blown up	06ALL	0	15G	G15_014		Non-Converged Contingency	1792	1792	0.15349	-	BORDER 7345.00 - CHISHOLM7 345.00 345KV CKT 1
FDNSLock-Blown up	06ALL	0	15G	G15_014		Non-Converged Contingency	1792	1792	0.15349	-	BORDER 7345.00 - CHISHOLM7 345.00 345KV CKT 2
FDNSLock-Blown up	06ALL	0	15G	G15_014		Non-Converged Contingency	1420	1775	0.15349	-	BORDER 7345.00 - TUCO_2 345.00 345KV CKT 1
FDNSLock-Blown up	06ALL	0	15G	G15_014		Non-Converged Contingency	1420	1775	0.15349	-	BORDER 7345.00 - TUCO_2 345.00 345KV CKT 2
FDNSLock-Blown up	06ALL	0	15G	G15_014		Non-Converged Contingency	956	1052	0.15259	-	G14_038T 345.00 - Hitchland Interchange 345KV CKT 1
FDNSLock-Blown up	06ALL	0	15G	G15_014		Non-Converged Contingency	956	1052	0.15259	-	G14_038T 345.00 - POTTER COUNTY INTERCHANGE 345KV CKT 1
FDNSLock-Blown up	06ALL	0	15G	G15_014		Non-Converged Contingency	560	560	0.15259	-	POTTER COUNTY INTERCHANGE (WAUK 90343-A) 345/230/13.2KV TRANSFORMER CKT 1
FDNSLock-Blown up	06ALL	0	15G	G15_014		Non-Converged Contingency	1420	1775	0.15121	-	TUCO INTERCHANGE - TUCO_2 345.00 345KV CKT 1
FDNSLock-Blown up	06ALL	0	15G	G15_014		Non-Converged Contingency	319	351	0.14213	-	BUSHLAND INTERCHANGE - DEAF SMITH COUNTY INTERCHANGE 230KV CKT 1
FDNSLock-Blown up	06ALL	0	15G	G15_014		Non-Converged Contingency	319	351	0.14213	-	BUSHLAND INTERCHANGE 230KV SWITCHED SHUNT
FDNSLock-Blown up	06ALL	0	15G	G15_014		Non-Converged Contingency	319	351	0.13636	-	G13_027T 230.00 - TOLK STATION WEST 230KV CKT 1
FDNSLock-Blown up	06ALL	0	15G	G15_014		Non-Converged Contingency	478	502	0.13538	-	TOLK STATION EAST - TUCO INTERCHANGE 230KV CKT 1
FDNSLock-Blown up	06ALL	0	15G	G15_014		Non-Converged Contingency	478	478	0.13123	-	DEAF SMITH COUNTY INTERCHANGE - G14-068T 230.00 230KV CKT 1
FDNSLock-Blown up	06ALL	0	15G	G15_014		Non-Converged Contingency	478	478	0.13123	-	G14-068T 230.00 - PLANT X STATION 230KV CKT 1
FDNSLock-Blown up	06ALL	0	15G	G15_014		Non-Converged Contingency	218	239	0.12639	-	WOLFFORTH INTERCHANGE - YUMA INTERCHANGE 115KV CKT 1
FDNSLock-Blown up	06ALL	0	15G	G15_014		Non-Converged Contingency	319	351	0.12562	-	BUSHLAND INTERCHANGE - POTTER COUNTY INTERCHANGE 230KV CKT 1
FDNSLock-Blown up	06ALL	0	15G	G15_014		Non-Converged Contingency	956	1052	0.12117	-	FINNEY SWITCHING STATION - Hitchland Interchange 345KV CKT 1
FDNSLock-Blown up	06ALL	0	15G	G15_014		Non-Converged Contingency	956	1052	0.12117	-	FINNEY SWITCHING STATION - HOLCOMB 345KV CKT 1
FDNSLock-Blown up	06ALL	0	15G	G15_014		Non-Converged Contingency	0	0	0.12117	-	SPP-SWPS-05
FDNSLock-Blown up	06ALL	0	15G	G15_014		Non-Converged Contingency	0	0	0.11855	-	SPP-SWPS-02
FDNSLock-Blown up	06ALL	0	15G	G15_014		Non-Converged Contingency	0	0	0.11203	-	SPP-SWPS-03
FDNSLock-Blown up	06ALL	0	15G	G15_014		Non-Converged Contingency	478	502	0.10994	-	NEWHART 230 - POTTER COUNTY INTERCHANGE 230KV CKT 1
FDNSLock-Blown up	06ALL	0	15G	G15_014		Non-Converged Contingency	0	0	0.09585	-	SPP-SWPS-T59
FDNSLock-Blown up	06ALL	0	15G	G15_014		Non-Converged Contingency	1420	1775	0.09409	-	G11_051T 345.00 - TATONGA7 345.00 345KV CKT 1
FDNSLock-Blown up	06ALL	0	15G	G15_014		Non-Converged Contingency	1420	1775	0.09409	-	G11_051T 345.00 - WOODWARD DISTRICT EHV 345KV CKT 1
FDNSLock-Blown up	06ALL	0	15G	G15_014		Non-Converged Contingency	1195	1195	0.09409	-	NORTHWEST - TATONGA7 345.00 345KV CKT 1
FDNSLock-Blown up	06ALL	0	15G	G15_014		Non-Converged Contingency	0	0	0.09409	-	SPSCONT-04
FDNSLock-Blown up	06ALL	0	15G	G15_014		Non-Converged Contingency	0	0	0.09409	-	SPSCONT-05B
FDNSLock-Blown up	06ALL	0	15G	G15_014		Non-Converged Contingency	319	351	0.08518	-	AMARILLO SOUTH INTERCHANGE - SWISHER COUNTY INTERCHANGE 230KV CKT 1
FDNSLock-Blown up	06ALL	0	15G	G15_014		Non-Converged Contingency	319	351	0.08173	-	CARLISLE INTERCHANGE - TUCO INTERCHANGE 230KV CKT 1
FDNSLock-Blown up	06ALL	0	15G	G15_014		Non-Converged Contingency	319	351	0.07892	-	AMOCO SWITCHING STATION - SUNDOWN INTERCHANGE 230KV CKT 1
FDNSLock-Blown up	06ALL	0	15G	G15_014		Non-Converged Contingency	319	351	0.07892	-	AMOCO SWITCHING STATION - YOAKUM COUNTY INTERCHANGE 230KV CKT 1
FDNSLock-Blown up	06ALL	0	15G	G15_014		Non-Converged Contingency	1420	1775	0.07522	-	G11-14T 345.00 - WOODWARD DISTRICT EHV 345KV CKT 1
FDNSLock-Blown up	06ALL	0	15G	G15_014		Non-Converged Contingency	1420	1775	0.07522	-	G11-14T 345.00 - WOODWARD DISTRICT EHV 345KV CKT 2
FDNSLock-Blown up	06ALL	0	15G	G15_014		Non-Converged Contingency	717	926	0.06891	-	CROSSROADS 345.00 - TOLK STATION 345KV CKT 1
FDNSLock-Blown up	06ALL	0	15G	G15_014		Non-Converged Contingency	560	560	0.06891	-	TOLK STATION (ABBXNL844501) 345/230/13.2KV TRANSFORMER CKT 1
FDNSLock-Blown up	06ALL	0	15G	G15_014		Non-Converged Contingency	478	502	0.06411	-	HITCHLAND INTERCHANGE - MOORE COUNTY INTERCHANGE 230KV CKT 1
FDNSLock-Blown up	06ALL	0	15G	G15_014		Non-Converged Contingency	478	502	0.06411	-	HITCHLAND INTERCHANGE - MOORE COUNTY INTERCHANGE 230KV CKT 1

SOLUTION	GROUP	SCENARIO	SEASON	SOURCE	DIRECTION	MONITORED ELEMENT	RATEA (MVA)	RATEB(MVA)	TDF	TC%LOADING (% MVA)	CONTINGENCY
FDNSLock-Blown up	06ALL	0	15G	G15_014		Non-Converged Contingency	439	439	0.05928	-	CHISHOLM6 230.00 - SWEETWATER 230KV CKT 1
FDNSLock-Blown up	06ALL	0	15G	G15_014		Non-Converged Contingency	319	351	0.05928	-	GRAPEVINE INTERCHANGE - STATELINE INTERCHANGE 230KV CKT 1
FDNSLock-Blown up	06ALL	0	15G	G15_014		Non-Converged Contingency	349	395	0.05928	-	STATELINE INTERCHANGE - STLN-DEMARC6 230KV CKT 1
FDNSLock-Blown up	06ALL	0	15G	G15_014		Non-Converged Contingency	396	441	0.05928	-	STLN-DEMARC6 - SWEETWATER 230KV CKT 1
FDNSLock-Blown up	06ALL	0	15G	G15_014		Non-Converged Contingency	439	439	0.05861	-	CHISHOLM6 230.00 - ELK CITY 230KV 230KV CKT 1
FDNSLock-Blown up	06ALL	0	15G	G15_014		Non-Converged Contingency	287	316	0.05861	-	ELK CITY 230KV (ELKCTY-6) 230/138/13.8KV TRANSFORMER CKT 1
FDNSLock-Blown up	06ALL	0	15G	G15_014		Non-Converged Contingency	319	351	0.05612	-	MOORE COUNTY INTERCHANGE - POTTER COUNTY INTERCHANGE 230KV CKT 1
FDNSLock-Blown up	06ALL	0	15G	G15_014		Non-Converged Contingency	319	351	0.05612	-	MOORE COUNTY INTERCHANGE - POTTER COUNTY INTERCHANGE 230KV CKT 1
FDNSLock-Blown up	06ALL	0	15G	G15_014		Non-Converged Contingency	1413	1517	0.05596	-	BUCKNER7 345.00 - SPEARVILLE 345KV CKT 1
FDNSLock-Blown up	06ALL	0	15G	G15_014		Non-Converged Contingency	319	351	0.05275	-	GRAPEVINE INTERCHANGE - NICHOLS STATION 230KV CKT 1
FDNSLock-Blown up	06ALL	0	15G	G15_014		Non-Converged Contingency	319	351	0.03804	-	CHAVES COUNTY INTERCHANGE - SAN JUAN MESA TAP 230KV CKT 1
FDNSLock-Blown up	06ALL	0	15SP	G15_014		Non-Converged Contingency	0	0	0.318	-	SPSCONT-02X
FDNSLock-Blown up	06ALL	0	15SP	G15_014		Non-Converged Contingency	956	994	0.20091	-	G14-074T 345.00 - OKLAUNION 345KV CKT 1
FDNSLock-Blown up	06ALL	0	15SP	G15_014		Non-Converged Contingency	956	994	0.20091	-	G14-074T 345.00 - TUCO INTERCHANGE 345KV CKT 1
FDNSLock-Blown up	06ALL	0	15SP	G15_014		Non-Converged Contingency	956	1052	0.159	-	G14_038T 345.00 - Hitchland Interchange 345KV CKT 1
FDNSLock-Blown up	06ALL	0	15SP	G15_014		Non-Converged Contingency	1420	1775	0.15755	-	BORDER 7345.00 - TUCO_2 345.00 345KV CKT 1
FDNSLock-Blown up	06ALL	0	15SP	G15_014		Non-Converged Contingency	1420	1775	0.15755	-	BORDER 7345.00 - TUCO_2 345.00 345KV CKT 2
FDNSLock-Blown up	06ALL	0	15SP	G15_014		Non-Converged Contingency	478	478	0.13206	-	G14-068T 230.00 - PLANT X STATION 230KV CKT 1
FDNSLock-Blown up	06ALL	0	15WP	G15_014		Non-Converged Contingency	1033	1071	0.20598	-	G14-074T 345.00 - OKLAUNION 345KV CKT 1
FDNSLock-Blown up	06ALL	0	20SP	G15_014		Non-Converged Contingency	956	994	0.2725	-	G14-074T 345.00 - OKLAUNION 345KV CKT 1
FDNSLock-Blown up	06ALL	0	20WP	G15_014		Non-Converged Contingency	0	0	0.30897	-	SPSCONT-02X
FDNSLock-Blown up	06ALL	0	20WP	G15_014		Non-Converged Contingency	1033	1071	0.26949	-	G14-074T 345.00 - OKLAUNION 345KV CKT 1
FDNSLock-Blown up	06ALL	0	20WP	G15_014		Non-Converged Contingency	1033	1071	0.26949	-	G14-074T 345.00 - TUCO INTERCHANGE 345KV CKT 1
FDNSLock-Blown up	06ALL	0	20WP	G15_014		Non-Converged Contingency	1420	1775	0.20784	-	BORDER 7345.00 - TUCO_2 345.00 345KV CKT 1
FDNSLock-Blown up	06ALL	0	20WP	G15_014		Non-Converged Contingency	1792	1792	0.20784	-	BORDER 7345.00 - WOODWARD DISTRICT EHV 345KV CKT 1
FDNSLock-Blown up	06ALL	0	20WP	G15_014		Non-Converged Contingency	956	1052	0.15449	-	G14_038T 345.00 - Hitchland Interchange 345KV CKT 1
FDNSLock-Blown up	06ALL	2	15G	G15_014		Non-Converged Contingency	0	0	0.27856	-	SPSCONT-02X
FDNSLock-Blown up	06ALL	2	15G	G15_014		Non-Converged Contingency	956	994	0.20831	-	G14-074T 345.00 - OKLAUNION 345KV CKT 1
FDNSLock-Blown up	06ALL	2	15G	G15_014		Non-Converged Contingency	956	994	0.20831	-	G14-074T 345.00 - TUCO INTERCHANGE 345KV CKT 1
FDNSLock-Blown up	06ALL	2	15G	G15_014		Non-Converged Contingency	1420	1775	0.16726	-	BORDER 7345.00 - TUCO_2 345.00 345KV CKT 1
FDNSLock-Blown up	06ALL	2	15G	G15_014		Non-Converged Contingency	1420	1775	0.16726	-	BORDER 7345.00 - TUCO_2 345.00 345KV CKT 2
FDNSLock-Blown up	06ALL	2	15G	G15_014		Non-Converged Contingency	956	1052	0.13928	-	G14_038T 345.00 - Hitchland Interchange 345KV CKT 1
FDNSLock-Blown up	06ALL	2	15G	G15_014		Non-Converged Contingency	956	1052	0.13928	-	G14_038T 345.00 - POTTER COUNTY INTERCHANGE 345KV CKT 1
FDNSLock-Blown up	06ALL	2	15G	G15_014		Non-Converged Contingency	560	560	0.13928	-	POTTER COUNTY INTERCHANGE (WAUK 90343-A) 345/230/13.2KV TRANSFORMER CKT 1
FDNSLock-Blown up	06ALL	2	15SP	G15_014		Non-Converged Contingency	956	994	0.21407	-	G14-074T 345.00 - OKLAUNION 345KV CKT 1
FDNSLock-Blown up	06ALL	2	15WP	G15_014		Non-Converged Contingency	1033	1071	0.21916	-	G14-074T 345.00 - OKLAUNION 345KV CKT 1
FDNSLock-Blown up	06ALL	3	15G	G15_014		Non-Converged Contingency	0	0	0.36545	-	SPSCONT-02X
FDNSLock-Blown up	06ALL	3	15G	G15_014		Non-Converged Contingency	956	994	0.19393	-	G14-074T 345.00 - OKLAUNION 345KV CKT 1
FDNSLock-Blown up	06ALL	3	15G	G15_014		Non-Converged Contingency	956	1052	0.18272	-	G14_038T 345.00 - Hitchland Interchange 345KV CKT 1
FDNSLock-Blown up	06ALL	3	15G	G15_014		Non-Converged Contingency	956	1052	0.18272	-	G14_038T 345.00 - POTTER COUNTY INTERCHANGE 345KV CKT 1
FDNS	06ALL	0	15G	G15_014	TO->FROM	AMOCO SWITCHING STATION - YOAKUM COUNTY INTERCHANGE 230KV CKT 1	319	351	0.30881	110.8847	COCHRAN INTERCHANGE - G15-014T 115.00 115KV CKT 1
FDNS	06ALL	0	15G	G15_014	TO->FROM	AMOCO SWITCHING STATION - YOAKUM COUNTY INTERCHANGE 230KV CKT 1	319	351	0.30881	106.7456	COCHRAN INTERCHANGE - PACIFIC SUB 115KV CKT 1
FDNS	06ALL	0	15G	G15_014	TO->FROM	AMOCO SWITCHING STATION - YOAKUM COUNTY INTERCHANGE 230KV CKT 1	319	351	0.30881	106.286	SPP-SWPS-V56
FDNS	06ALL	0	15G	G15_014	TO->FROM	AMOCO SWITCHING STATION - YOAKUM COUNTY INTERCHANGE 230KV CKT 1	319	351	0.30881	105.5437	PACIFIC SUB - SUNDOWN INTERCHANGE 115KV CKT 1
FDNS	06ALL	0	15G	G15_014	TO->FROM	AMOCO SWITCHING STATION - YOAKUM COUNTY INTERCHANGE 230KV CKT 1	319	351	0.07892	104.8902	BASE CASE
FDNS	06ALL	0	15SP	G15_014	TO->FROM	CARLISLE INTERCHANGE - LP-DOUD_TP 3115.00 115KV CKT 1	159	160	0.24194	112.1013	LUBBOCK SOUTH INTERCHANGE - WOLFFORTH INTERCHANGE 230KV CKT 1
FDNS	06ALL	0	15SP	G15_014	TO->FROM	COCHRAN INTERCHANGE - G15-014T 115.00 115KV CKT 1	159	160	0.61171	107.2231	AMOCO SWITCHING STATION - YOAKUM COUNTY INTERCHANGE 230KV CKT 1
FDNS	06ALL	0	15SP	G15_014	FROM->TO	ELK CITY 230KV (ELKCTY-6) 230/138/13.8KV TRANSFORMER CKT 1	272	316	0.06356	125.7575	BASE CASE
FDNS	06ALL	0	15SP	G15_014	FROM->TO	ELK CITY 230KV (ELKCTY-6) 230/138/13.8KV TRANSFORMER CKT 1	272	316	0.06356	124.0328	BASE CASE
FDNS	06ALL	0	15G	G15_014	FROM->TO	ELK CITY 230KV (ELKCTY-6) 230/138/13.8KV TRANSFORMER CKT 1	287	316	0.05861	112.017	BASE CASE
FDNS	06ALL	0	15G	G15_014	FROM->TO	ELK CITY 230KV (ELKCTY-6) 230/138/13.8KV TRANSFORMER CKT 1	287	316	0.05861	110.2834	BASE CASE
FDNS	06ALL	0	15WP	G15_014	FROM->TO	ELK CITY 230KV (ELKCTY-6) 230/138/13.8KV TRANSFORMER CKT 1	287	316	0.06538	107.7723	BASE CASE
FDNS	06ALL	0	15WP	G15_014	FROM->TO	ELK CITY 230KV (ELKCTY-6) 230/138/13.8KV TRANSFORMER CKT 1	287	316	0.06538	106.4302	BASE CASE
FDNS	06ALL	0	20WP	G15_014	TO->FROM	GRAPEVINE INTERCHANGE - NICHOLS STATION 230KV CKT 1	329	361	0.07852	121.1428	BASE CASE
FDNS	06ALL	0	15G	G15_014	TO->FROM	GRAPEVINE INTERCHANGE - NICHOLS STATION 230KV CKT 1	319	351	0.05275	105.2692	BASE CASE
FDNS	06ALL	0	20SP	G15_014	TO->FROM	GRAPEVINE INTERCHANGE - NICHOLS STATION 230KV CKT 1	319	351	0.08039	99.5	BASE CASE
FDNS	06ALL	0	15SP	G15_014	TO->FROM	LP-DOUD_TP 3115.00 - SP-WOLF_TP 3115.00 115KV CKT 1	159	175	0.24194	114.9744	LUBBOCK SOUTH INTERCHANGE - WOLFFORTH INTERCHANGE 230KV CKT 1
FDNS	06ALL	0	15SP	G15_014	TO->FROM	LUBBOCK SOUTH INTERCHANGE - WOLFFORTH INTERCHANGE 230KV CKT 1	319	351	0.30144	115.1095	TOLK STATION EAST - TUCO INTERCHANGE 230KV CKT 1
FDNS	06ALL	0	15G	G15_014	TO->FROM	LUBBOCK SOUTH INTERCHANGE - WOLFFORTH INTERCHANGE 230KV CKT 1	319	351	0.34433	100.9916	SP-WOLF_TP 3115.00 - YUMA INTERCHANGE 115KV CKT 1
FDNS	06ALL	0	15SP	G15_014	TO->FROM	LUBBOCK SOUTH INTERCHANGE - WOLFFORTH INTERCHANGE 230KV CKT 1	319	351	0.348	99.9	WOLFFORTH INTERCHANGE - YUMA INTERCHANGE 115KV CKT 1
FDNS	06ALL	0	15SP	G15_014	TO->FROM	NEWHART 230 - PLANT X STATION 230KV CKT 1	478	502	0.20054	131.4399	DEAF SMITH COUNTY INTERCHANGE - G14-068T 230.00 230KV CKT 1
FDNS	06ALL	0	15SP	G15_014	TO->FROM	NEWHART 230 - PLANT X STATION 230KV CKT 1	478	502	0.2014	105.469	SUNDOWN INTERCHANGE - WOLFFORTH INTERCHANGE 230KV CKT 1
FDNS	06ALL	0	15SP	G15_014	TO->FROM	SP-WOLF_TP 3115.00 - YUMA INTERCHANGE 115KV CKT 1	159	175	0.24194	124.2367	LUBBOCK SOUTH INTERCHANGE - WOLFFORTH INTERCHANGE 230KV CKT 1
FDNS	06ALL	0	15SP	G15_014	FROM->TO	SUNDOWN INTERCHANGE - WOLFFORTH INTERCHANGE 230KV CKT 1	319	351	0.28932	127.2931	TOLK STATION EAST - TUCO INTERCHANGE 230KV CKT 1
FDNS	06ALL	0	15SP	G15_014	FROM->TO	SUNDOWN INTERCHANGE - WOLFFORTH INTERCHANGE 230KV CKT 1	319	351	0.27399	107.2174	NEWHART 230 - PLANT X STATION 230KV CKT 1
FDNS	06ALL	0	15G	G15_014	FROM->TO	SUNDOWN INTERCHANGE - WOLFFORTH INTERCHANGE 230KV CKT 1	319	351	0.3285	104.1935	TERRY COUNTY INTERCHANGE - WOLFFORTH INTERCHANGE 115KV CKT 1
FDNS	06ALL	0	15SP	G15_014	FROM->TO	SUNDOWN INTERCHANGE - WOLFFORTH INTERCHANGE 230KV CKT 1	319	351	0.332	100.5801	TERRY COUNTY INTERCHANGE - WOLFFORTH INTERCHANGE 115KV CKT 1
FDNS	06ALL	0	15SP	G15_014	FROM->TO	SUNDOWN INTERCHANGE - WOLFFORTH INTERCHANGE 230KV CKT 1	319	351	0.26435	100.4541	DEAF SMITH COUNTY INTERCHANGE - G14-068T 230.00 230KV CKT 1
FDNS	06ALL	0	15SP	G15_014	FROM->TO	TERRY COUNTY INTERCHANGE - WOLFFORTH INTERCHANGE 115KV CKT 1	120	154	0.21685	125.1182	SUNDOWN INTERCHANGE - WOLFFORTH INTERCHANGE 230KV CKT 1
FDNS	06ALL	0	15G	G15_014	FROM->TO	TERRY COUNTY INTERCHANGE - WOLFFORTH INTERCHANGE 115KV CKT 1	120	154	0.14076	108.5207	BASE CASE
FDNS	06ALL	0	15SP	G15_014	FROM->TO	TOLK STATION EAST - TUCO INTERCHANGE 230KV CKT 1	478	502	0.21092	108.8842	SUNDOWN INTERCHANGE - WOLFFORTH INTERCHANGE 230KV CKT 1
FDNS	06ALL	0	15SP	G15_014	FROM->TO	TOLK STATION EAST - TUCO INTERCHANGE 230KV CKT 1	478	502	0.20103	102.2896	LUBBOCK SOUTH INTERCHANGE - WOLFFORTH INTERCHANGE 230KV CKT 1
FDNS	06ALL	0	15SP	G15_014	FROM->TO	TUCO INTERCHANGE - TUCO_2 230.00 230KV CKT 1	478	502	0.28777	171.3069	TUCO INTERCHANGE - TUCO_2 345.00 345KV CKT 1
FDNS	06ALL	0	15WP	G15_014	FROM->TO	TUCO INTERCHANGE - TUCO_2 230.00 230KV CKT 1	557	557	0.29424	134.3573	TUCO INTERCHANGE - TUCO_2 345.00 345KV CKT 1
FDNS	06ALL	0	15SP	G15_014	FROM->TO	TUCO INTERCHANGE - TUCO_2 230.00 230KV CKT 1	478	502	0.24483	117.2904	TUCO INTERCHANGE (GE M1022338) 345/230/13.2KV TRANSFORMER CKT 1

SOLUTION	GROUP	SCENARIO	SEASON	SOURCE	DIRECTION	MONITORED ELEMENT	RATEA (MVA)	RATEB(MVA)	TDF	TC%LOADING (% MVA)	CONTINGENCY
FDNS	06ALL	0	15SP	G15_014	FROM->TO	TUCO INTERCHANGE - TUCO_2 230.00 230KV CKT 1	478	502	0.22864	109.6173	TUCO INTERCHANGE (SIEM 8743066) 345/230/13.2KV TRANSFORMER CKT 2
FDNS	06ALL	0	15SP	G15_014	FROM->TO	TUCO INTERCHANGE - TUCO_2 230.00 230KV CKT 1	478	502	0.2035	105.6028	NEWHART 230 - PLANT X STATION 230KV CKT 1
FDNS	06ALL	0	15WP	G15_014	FROM->TO	TUCO INTERCHANGE - TUCO_2 230.00 230KV CKT 1	557	557	0.25045	104.677	TUCO INTERCHANGE (GE M1022338) 345/230/13.2KV TRANSFORMER CKT 1
FDNS	06ALL	0	20SP	G15_014	FROM->TO	TUCO INTERCHANGE - TUCO_2 230.00 230KV CKT 1	478	502	0.26001	101.2947	TUCO INTERCHANGE - TUCO_2 345.00 345KV CKT 1
FDNS	06ALL	0	15WP	G15_014	FROM->TO	TUCO INTERCHANGE (GE M1022338) 345/230/13.2KV TRANSFORMER CKT 1	560	560	0.28521	123.6189	TUCO INTERCHANGE (SIEM 8743066) 345/230/13.2KV TRANSFORMER CKT 2
FDNS	06ALL	0	15WP	G15_014	FROM->TO	TUCO INTERCHANGE (GE M1022338) 345/230/13.2KV TRANSFORMER CKT 1	560	560	0.28521	121.7966	TUCO INTERCHANGE (SIEM 8743066) 345/230/13.2KV TRANSFORMER CKT 2
FDNS	06ALL	0	15WP	G15_014	FROM->TO	TUCO INTERCHANGE (GE M1022338) 345/230/13.2KV TRANSFORMER CKT 1	560	560	0.27595	120.4848	TUCO_2 345.00 (TUCO_2 XFMR) 345/230/13.2KV TRANSFORMER CKT 1
FDNS	06ALL	0	15WP	G15_014	FROM->TO	TUCO INTERCHANGE (GE M1022338) 345/230/13.2KV TRANSFORMER CKT 1	560	560	0.27595	118.8811	TUCO_2 345.00 (TUCO_2 XFMR) 345/230/13.2KV TRANSFORMER CKT 1
FDNS	06ALL	0	15SP	G15_014	FROM->TO	TUCO INTERCHANGE (GE M1022338) 345/230/13.2KV TRANSFORMER CKT 1	560	560	0.27849	113.3311	TUCO INTERCHANGE (SIEM 8743066) 345/230/13.2KV TRANSFORMER CKT 2
FDNS	06ALL	0	15WP	G15_014	FROM->TO	TUCO INTERCHANGE (GE M1022338) 345/230/13.2KV TRANSFORMER CKT 1	560	560	0.26705	112.9697	TUCO INTERCHANGE - TUCO_2 230.00 230KV CKT 1
FDNS	06ALL	0	15WP	G15_014	FROM->TO	TUCO INTERCHANGE (GE M1022338) 345/230/13.2KV TRANSFORMER CKT 1	560	560	0.26705	111.3776	TUCO INTERCHANGE - TUCO_2 230.00 230KV CKT 1
FDNS	06ALL	0	15SP	G15_014	FROM->TO	TUCO INTERCHANGE (GE M1022338) 345/230/13.2KV TRANSFORMER CKT 1	560	560	0.27849	111.3719	TUCO INTERCHANGE (SIEM 8743066) 345/230/13.2KV TRANSFORMER CKT 2
FDNS	06ALL	0	15SP	G15_014	FROM->TO	TUCO INTERCHANGE (GE M1022338) 345/230/13.2KV TRANSFORMER CKT 1	560	560	0.26942	110.0342	TUCO_2 345.00 (TUCO_2 XFMR) 345/230/13.2KV TRANSFORMER CKT 1
FDNS	06ALL	0	15SP	G15_014	FROM->TO	TUCO INTERCHANGE (GE M1022338) 345/230/13.2KV TRANSFORMER CKT 1	560	560	0.26942	108.332	TUCO_2 345.00 (TUCO_2 XFMR) 345/230/13.2KV TRANSFORMER CKT 1
FDNS	06ALL	0	15SP	G15_014	FROM->TO	TUCO INTERCHANGE (GE M1022338) 345/230/13.2KV TRANSFORMER CKT 1	560	560	0.26088	107.9073	TUCO INTERCHANGE - TUCO_2 230.00 230KV CKT 1
FDNS	06ALL	0	15SP	G15_014	FROM->TO	TUCO INTERCHANGE (GE M1022338) 345/230/13.2KV TRANSFORMER CKT 1	560	560	0.26088	105.9346	TUCO INTERCHANGE - TUCO_2 230.00 230KV CKT 1
FDNS	06ALL	0	15SP	G15_014	FROM->TO	TUCO_2 345.00 (TUCO_2 XFMR) 345/230/13.2KV TRANSFORMER CKT 1	560	560	0.28954	145.8188	TUCO INTERCHANGE - TUCO_2 345.00 345KV CKT 1
FDNS	06ALL	0	15SP	G15_014	FROM->TO	TUCO_2 345.00 (TUCO_2 XFMR) 345/230/13.2KV TRANSFORMER CKT 1	560	560	0.28954	142.7342	TUCO INTERCHANGE - TUCO_2 345.00 345KV CKT 1
FDNS	06ALL	0	15WP	G15_014	FROM->TO	TUCO_2 345.00 (TUCO_2 XFMR) 345/230/13.2KV TRANSFORMER CKT 1	560	560	0.29639	138.8622	TUCO INTERCHANGE - TUCO_2 345.00 345KV CKT 1
FDNS	06ALL	0	15WP	G15_014	FROM->TO	TUCO_2 345.00 (TUCO_2 XFMR) 345/230/13.2KV TRANSFORMER CKT 1	560	560	0.29639	136.3817	TUCO INTERCHANGE - TUCO_2 345.00 345KV CKT 1
FDNS	06ALL	0	15WP	G15_014	FROM->TO	TUCO_2 345.00 (TUCO_2 XFMR) 345/230/13.2KV TRANSFORMER CKT 1	560	560	0.25002	109.7547	TUCO INTERCHANGE (GE M1022338) 345/230/13.2KV TRANSFORMER CKT 1
FDNS	06ALL	0	15WP	G15_014	FROM->TO	TUCO_2 345.00 (TUCO_2 XFMR) 345/230/13.2KV TRANSFORMER CKT 1	560	560	0.25002	108.6761	TUCO INTERCHANGE (GE M1022338) 345/230/13.2KV TRANSFORMER CKT 1
FDNS	06ALL	0	15WP	G15_014	FROM->TO	TUCO_2 345.00 (TUCO_2 XFMR) 345/230/13.2KV TRANSFORMER CKT 1	560	560	0.23388	102.7663	TUCO INTERCHANGE (SIEM 8743066) 345/230/13.2KV TRANSFORMER CKT 2
FDNS	06ALL	0	15WP	G15_014	FROM->TO	TUCO_2 345.00 (TUCO_2 XFMR) 345/230/13.2KV TRANSFORMER CKT 1	560	560	0.23388	101.7947	TUCO INTERCHANGE (SIEM 8743066) 345/230/13.2KV TRANSFORMER CKT 2
FDNS	06ALL	0	15SP	G15_014	FROM->TO	TUCO_2 345.00 (TUCO_2 XFMR) 345/230/13.2KV TRANSFORMER CKT 1	560	560	0.24407	99.6	TUCO INTERCHANGE (GE M1022338) 345/230/13.2KV TRANSFORMER CKT 1
FDNS	06ALL	0	15SP	G15_014	FROM->TO	WOLFFORTH INTERCHANGE - YUMA INTERCHANGE 115KV CKT 1	218	239	0.24194	105.0169	LUBBOCK SOUTH INTERCHANGE - WOLFFORTH INTERCHANGE 230KV CKT 1
FDNS	06ALL	2	15SP	G15_014	FROM->TO	ELK CITY 230KV (ELKCTY-6) 230/138/13.8KV TRANSFORMER CKT 1	272	316	0.06366	125.7818	BASE CASE
FDNS	06ALL	2	15SP	G15_014	FROM->TO	ELK CITY 230KV (ELKCTY-6) 230/138/13.8KV TRANSFORMER CKT 1	272	316	0.06366	124.4125	BASE CASE
FDNS	06ALL	2	15G	G15_014	FROM->TO	ELK CITY 230KV (ELKCTY-6) 230/138/13.8KV TRANSFORMER CKT 1	287	316	0.05924	111.2694	BASE CASE
FDNS	06ALL	2	15G	G15_014	FROM->TO	ELK CITY 230KV (ELKCTY-6) 230/138/13.8KV TRANSFORMER CKT 1	287	316	0.05924	110.3238	BASE CASE
FDNS	06ALL	2	15WP	G15_014	FROM->TO	ELK CITY 230KV (ELKCTY-6) 230/138/13.8KV TRANSFORMER CKT 1	287	316	0.06543	107.6385	BASE CASE
FDNS	06ALL	2	15WP	G15_014	FROM->TO	ELK CITY 230KV (ELKCTY-6) 230/138/13.8KV TRANSFORMER CKT 1	287	316	0.06543	106.6339	BASE CASE
FDNS	06ALL	2	20SP	G15_014	FROM->TO	ELK CITY 230KV (ELKCTY-6) 230/138/13.8KV TRANSFORMER CKT 1	272	316	0.06381	103.949	BASE CASE
FDNS	06ALL	2	20SP	G15_014	FROM->TO	ELK CITY 230KV (ELKCTY-6) 230/138/13.8KV TRANSFORMER CKT 1	272	316	0.06381	103.7414	BASE CASE
FDNS	06ALL	2	20WP	G15_014	FROM->TO	ELK CITY 230KV (ELKCTY-6) 230/138/13.8KV TRANSFORMER CKT 1	287	316	0.06306	101.967	BASE CASE
FDNS	06ALL	2	20WP	G15_014	FROM->TO	ELK CITY 230KV (ELKCTY-6) 230/138/13.8KV TRANSFORMER CKT 1	287	316	0.06306	101.2457	BASE CASE
FDNS	06ALL	2	15G	G15_014	FROM->TO	TUCO INTERCHANGE - TUCO_2 230.00 230KV CKT 1	478	502	0.32722	200.4231	TUCO INTERCHANGE - TUCO_2 345.00 345KV CKT 1
FDNS	06ALL	2	15SP	G15_014	FROM->TO	TUCO INTERCHANGE - TUCO_2 230.00 230KV CKT 1	478	502	0.33404	183.8625	TUCO INTERCHANGE - TUCO_2 345.00 345KV CKT 1
FDNS	06ALL	2	15WP	G15_014	FROM->TO	TUCO INTERCHANGE - TUCO_2 230.00 230KV CKT 1	557	557	0.34099	142.2485	TUCO INTERCHANGE - TUCO_2 345.00 345KV CKT 1
FDNS	06ALL	2	20SP	G15_014	FROM->TO	TUCO INTERCHANGE - TUCO_2 230.00 230KV CKT 1	478	502	0.33747	137.8459	TUCO INTERCHANGE - TUCO_2 345.00 345KV CKT 1
FDNS	06ALL	2	15G	G15_014	FROM->TO	TUCO_2 345.00 (TUCO_2 XFMR) 345/230/13.2KV TRANSFORMER CKT 1	560	560	0.29244	167.6169	TUCO INTERCHANGE - TUCO_2 345.00 345KV CKT 1
FDNS	06ALL	2	15G	G15_014	FROM->TO	TUCO_2 345.00 (TUCO_2 XFMR) 345/230/13.2KV TRANSFORMER CKT 1	560	560	0.29244	164.2629	TUCO INTERCHANGE - TUCO_2 345.00 345KV CKT 1
FDNS	06ALL	2	15SP	G15_014	FROM->TO	TUCO_2 345.00 (TUCO_2 XFMR) 345/230/13.2KV TRANSFORMER CKT 1	560	560	0.29957	149.8147	TUCO INTERCHANGE - TUCO_2 345.00 345KV CKT 1
FDNS	06ALL	2	15SP	G15_014	FROM->TO	TUCO_2 345.00 (TUCO_2 XFMR) 345/230/13.2KV TRANSFORMER CKT 1	560	560	0.29957	147.216	TUCO INTERCHANGE - TUCO_2 345.00 345KV CKT 1
FDNS	06ALL	2	15WP	G15_014	FROM->TO	TUCO_2 345.00 (TUCO_2 XFMR) 345/230/13.2KV TRANSFORMER CKT 1	560	560	0.30623	141.8557	TUCO INTERCHANGE - TUCO_2 345.00 345KV CKT 1
FDNS	06ALL	2	15WP	G15_014	FROM->TO	TUCO_2 345.00 (TUCO_2 XFMR) 345/230/13.2KV TRANSFORMER CKT 1	560	560	0.30623	139.9334	TUCO INTERCHANGE - TUCO_2 345.00 345KV CKT 1
FDNS	06ALL	2	20SP	G15_014	FROM->TO	TUCO_2 345.00 (TUCO_2 XFMR) 345/230/13.2KV TRANSFORMER CKT 1	560	560	0.30091	112.3827	TUCO INTERCHANGE - TUCO_2 345.00 345KV CKT 1
FDNS	06ALL	2	20SP	G15_014	FROM->TO	TUCO_2 345.00 (TUCO_2 XFMR) 345/230/13.2KV TRANSFORMER CKT 1	560	560	0.30091	112.1069	TUCO INTERCHANGE - TUCO_2 345.00 345KV CKT 1
FDNS	06ALL	3	15SP	G15_014	FROM->TO	ELK CITY 230KV (ELKCTY-6) 230/138/13.8KV TRANSFORMER CKT 1	272	316	0.0623	123.9727	BASE CASE
FDNS	06ALL	3	15SP	G15_014	FROM->TO	ELK CITY 230KV (ELKCTY-6) 230/138/13.8KV TRANSFORMER CKT 1	272	316	0.0623	122.7526	BASE CASE
FDNS	06ALL	3	15G	G15_014	FROM->TO	ELK CITY 230KV (ELKCTY-6) 230/138/13.8KV TRANSFORMER CKT 1	287	316	0.05791	109.3338	BASE CASE
FDNS	06ALL	3	15G	G15_014	FROM->TO	ELK CITY 230KV (ELKCTY-6) 230/138/13.8KV TRANSFORMER CKT 1	287	316	0.05791	108.4212	BASE CASE
FDNS	06ALL	3	15WP	G15_014	FROM->TO	ELK CITY 230KV (ELKCTY-6) 230/138/13.8KV TRANSFORMER CKT 1	287	316	0.06407	106.1239	BASE CASE
FDNS	06ALL	3	15WP	G15_014	FROM->TO	ELK CITY 230KV (ELKCTY-6) 230/138/13.8KV TRANSFORMER CKT 1	287	316	0.06407	105.1628	BASE CASE
FDNS	06ALL	3	20SP	G15_014	FROM->TO	ELK CITY 230KV (ELKCTY-6) 230/138/13.8KV TRANSFORMER CKT 1	272	316	0.06236	102.7547	BASE CASE
FDNS	06ALL	3	20SP	G15_014	FROM->TO	ELK CITY 230KV (ELKCTY-6) 230/138/13.8KV TRANSFORMER CKT 1	272	316	0.06236	102.5743	BASE CASE
FDNS	06ALL	3	20WP	G15_014	FROM->TO	ELK CITY 230KV (ELKCTY-6) 230/138/13.8KV TRANSFORMER CKT 1	287	316	0.06166	100.8598	BASE CASE
FDNS	06ALL	3	20WP	G15_014	FROM->TO	ELK CITY 230KV (ELKCTY-6) 230/138/13.8KV TRANSFORMER CKT 1	287	316	0.06166	100.2492	BASE CASE
FDNS	06ALL	3	15G	G15_014	TO->FROM	GRAPEVINE INTERCHANGE - NICHOLS STATION 230KV CKT 1	319	351	0.04951	100.925	BASE CASE
FDNS	06ALL	3	15G	G15_014	FROM->TO	TUCO INTERCHANGE - TUCO_2 230.00 230KV CKT 1	478	502	0.28772	168.7325	TUCO INTERCHANGE - TUCO_2 345.00 345KV CKT 1
FDNS	06ALL	3	15SP	G15_014	FROM->TO	TUCO INTERCHANGE - TUCO_2 230.00 230KV CKT 1	478	502	0.29397	154.1201	TUCO INTERCHANGE - TUCO_2 345.00 345KV CKT 1
FDNS	06ALL	3	15WP	G15_014	FROM->TO	TUCO INTERCHANGE - TUCO_2 230.00 230KV CKT 1	557	557	0.30014	120.7037	TUCO INTERCHANGE - TUCO_2 345.00 345KV CKT 1
FDNS	06ALL	3	20SP	G15_014	FROM->TO	TUCO INTERCHANGE - TUCO_2 230.00 230KV CKT 1	478	502	0.29676	118.0325	TUCO INTERCHANGE - TUCO_2 345.00 345KV CKT 1
FDNS	06ALL	3	20WP	G15_014	FROM->TO	TUCO INTERCHANGE - TUCO_2 230.00 230KV CKT 1	557	557	0.29468	111.9352	TUCO INTERCHANGE - TUCO_2 345.00 345KV CKT 1
FDNS	06ALL	3	15G	G15_014	FROM->TO	TUCO_2 345.00 (TUCO_2 XFMR) 345/230/13.2KV TRANSFORMER CKT 1	560	560	0.26473	151.8506	TUCO INTERCHANGE - TUCO_2 345.00 345KV CKT 1
FDNS	06ALL	3	15G	G15_014	FROM->TO	TUCO_2 345.00 (TUCO_2 XFMR) 345/230/13.2KV TRANSFORMER CKT 1	560	560	0.26473	149.0893	TUCO INTERCHANGE - TUCO_2 345.00 345KV CKT 1
FDNS	06ALL	3	15SP	G15_014	FROM->TO	TUCO_2 345.00 (TUCO_2 XFMR) 345/230/13.2KV TRANSFORMER CKT 1	560	560	0.27114	133.4173	TUCO INTERCHANGE - TUCO_2 345.00 345KV CKT 1
FDNS	06ALL	3	15SP	G15_014	FROM->TO	TUCO_2 345.00 (TUCO_2 XFMR) 345/230/13.2KV TRANSFORMER CKT 1	560	560	0.27114	131.8248	TUCO INTERCHANGE - TUCO_2 345.00 345KV CKT 1
FDNS	06ALL	3	15WP	G15_014	FROM->TO	TUCO_2 345.00 (TUCO_2 XFMR) 345/230/13.2KV TRANSFORMER CKT 1	560	560	0.27729	127.9846	TUCO INTERCHANGE - TUCO_2 345.00 345KV CKT 1
FDNS	06ALL	3	15WP	G15_014	FROM->TO	TUCO_2 345.00 (TUCO_2 XFMR) 345/230/13.2KV TRANSFORMER CKT 1	560	560	0.27729	126.6738	TUCO INTERCHANGE - TUCO_2 345.00 345KV CKT 1
FDNS	06ALL	3	20WP	G15_014	FROM->TO	TUCO_2 345.00 (TUCO_2 XFMR) 345/230/13.2KV TRANSFORMER CKT 1	560	560	0.2694	121.9391	TUCO INTERCHANGE - TUCO_2 345.00 345KV CKT 1
FDNS	06ALL	3	20WP	G15_014	FROM->TO	TUCO_2 345.00 (TUCO_2 XFMR) 345/230/13.2KV TRANSFORMER CKT 1	560	560	0.2694	121.0095	TUCO INTERCHANGE - TUCO_2 345.00 345KV CKT 1
FDNS	06ALL	3	20SP	G15_014	FROM->TO	TUCO_2 345.00 (TUCO_2 XFMR) 345/230/13.2KV TRANSFORMER CKT 1	560	560	0.27213	100.2304	TUCO INTERCHANGE - TUCO_2 345.00 345KV CKT 1
FDNS	06ALL	3	20SP	G15_014	FROM->TO	TUCO_2 345.00 (TUCO_2 XFMR) 345/230/13.2KV TRANSFORMER CKT 1	560	560	0.27213	100.1212	TUCO INTERCHANGE - TUCO_2 345.00 345KV CKT 1
FDNS	06ALL	4	15SP	G15_014	FROM->TO	CHISHOLM6 230.00 - ELK CITY 230KV 230KV CKT 1	353	353	0.06631	100.9254	BASE CASE

SOLUTION	GROUP	SCENARIO	SEASON	SOURCE	DIRECTION	MONITORED ELEMENT	RATEA (MVA)	RATEB(MVA)	TDF	TC%LOADING (% MVA)	CONTINGENCY
FDNS	06ALL	4	15SP	G15_014	FROM->TO	ELK CITY 230KV (ELKCTY-6) 230/138/13.8KV TRANSFORMER CKT 1	272	316	0.06631	129.8441	BASE CASE
FDNS	06ALL	4	15SP	G15_014	FROM->TO	ELK CITY 230KV (ELKCTY-6) 230/138/13.8KV TRANSFORMER CKT 1	272	316	0.06631	128.5805	BASE CASE
FDNS	06ALL	4	15G	G15_014	FROM->TO	ELK CITY 230KV (ELKCTY-6) 230/138/13.8KV TRANSFORMER CKT 1	287	316	0.06204	116.3182	BASE CASE
FDNS	06ALL	4	15G	G15_014	FROM->TO	ELK CITY 230KV (ELKCTY-6) 230/138/13.8KV TRANSFORMER CKT 1	287	316	0.06204	115.4161	BASE CASE
FDNS	06ALL	4	15WP	G15_014	FROM->TO	ELK CITY 230KV (ELKCTY-6) 230/138/13.8KV TRANSFORMER CKT 1	287	316	0.06823	112.0283	BASE CASE
FDNS	06ALL	4	15WP	G15_014	FROM->TO	ELK CITY 230KV (ELKCTY-6) 230/138/13.8KV TRANSFORMER CKT 1	287	316	0.06823	111.0401	BASE CASE
FDNS	06ALL	4	20SP	G15_014	FROM->TO	ELK CITY 230KV (ELKCTY-6) 230/138/13.8KV TRANSFORMER CKT 1	272	316	0.06638	107.1637	BASE CASE
FDNS	06ALL	4	20SP	G15_014	FROM->TO	ELK CITY 230KV (ELKCTY-6) 230/138/13.8KV TRANSFORMER CKT 1	272	316	0.06638	106.9127	BASE CASE
FDNS	06ALL	4	20WP	G15_014	FROM->TO	ELK CITY 230KV (ELKCTY-6) 230/138/13.8KV TRANSFORMER CKT 1	287	316	0.06568	106.7868	BASE CASE
FDNS	06ALL	4	20WP	G15_014	FROM->TO	ELK CITY 230KV (ELKCTY-6) 230/138/13.8KV TRANSFORMER CKT 1	287	316	0.06568	106.1189	BASE CASE
FDNS	06ALL	4	15G	G15_014	FROM->TO	TUCO INTERCHANGE - TUCO_2 230.00 230KV CKT 1	478	502	0.27321	148.7289	TUCO INTERCHANGE - TUCO_2 345.00 345KV CKT 1
FDNS	06ALL	4	15SP	G15_014	FROM->TO	TUCO INTERCHANGE - TUCO_2 230.00 230KV CKT 1	478	502	0.27885	139.4418	TUCO INTERCHANGE - TUCO_2 345.00 345KV CKT 1
FDNS	06ALL	4	20SP	G15_014	FROM->TO	TUCO INTERCHANGE - TUCO_2 230.00 230KV CKT 1	478	502	0.28141	108.3093	TUCO INTERCHANGE - TUCO_2 345.00 345KV CKT 1
FDNS	06ALL	4	15WP	G15_014	FROM->TO	TUCO INTERCHANGE - TUCO_2 230.00 230KV CKT 1	557	557	0.28474	107.3541	TUCO INTERCHANGE - TUCO_2 345.00 345KV CKT 1
FDNS	06ALL	4	20WP	G15_014	FROM->TO	TUCO INTERCHANGE - TUCO_2 230.00 230KV CKT 1	557	557	0.27978	99.6	TUCO INTERCHANGE - TUCO_2 345.00 345KV CKT 1
FDNS	06ALL	4	15G	G15_014	FROM->TO	TUCO_2 345.00 (TUCO_2 XFMR) 345/230/13.2KV TRANSFORMER CKT 1	560	560	0.23988	127.7356	TUCO INTERCHANGE - TUCO_2 345.00 345KV CKT 1
FDNS	06ALL	4	15G	G15_014	FROM->TO	TUCO_2 345.00 (TUCO_2 XFMR) 345/230/13.2KV TRANSFORMER CKT 1	560	560	0.23988	126.397	TUCO INTERCHANGE - TUCO_2 345.00 345KV CKT 1
FDNS	06ALL	4	15SP	G15_014	FROM->TO	TUCO_2 345.00 (TUCO_2 XFMR) 345/230/13.2KV TRANSFORMER CKT 1	560	560	0.24551	114.1941	TUCO INTERCHANGE - TUCO_2 345.00 345KV CKT 1
FDNS	06ALL	4	15SP	G15_014	FROM->TO	TUCO_2 345.00 (TUCO_2 XFMR) 345/230/13.2KV TRANSFORMER CKT 1	560	560	0.24551	113.3239	TUCO INTERCHANGE - TUCO_2 345.00 345KV CKT 1
FDNS	06ALL	4	15WP	G15_014	FROM->TO	TUCO_2 345.00 (TUCO_2 XFMR) 345/230/13.2KV TRANSFORMER CKT 1	560	560	0.25111	108.1334	TUCO INTERCHANGE - TUCO_2 345.00 345KV CKT 1
FDNS	06ALL	4	15WP	G15_014	FROM->TO	TUCO_2 345.00 (TUCO_2 XFMR) 345/230/13.2KV TRANSFORMER CKT 1	560	560	0.25111	107.4733	TUCO INTERCHANGE - TUCO_2 345.00 345KV CKT 1
FDNS	06ALL	4	20WP	G15_014	FROM->TO	TUCO_2 345.00 (TUCO_2 XFMR) 345/230/13.2KV TRANSFORMER CKT 1	560	560	0.24437	102.8738	TUCO INTERCHANGE - TUCO_2 345.00 345KV CKT 1
FDNS	06ALL	4	20WP	G15_014	FROM->TO	TUCO_2 345.00 (TUCO_2 XFMR) 345/230/13.2KV TRANSFORMER CKT 1	560	560	0.24437	102.4022	TUCO INTERCHANGE - TUCO_2 345.00 345KV CKT 1
FDNS	06ALL	5	15SP	G15_014	FROM->TO	CHISHOLM6 230.00 - ELK CITY 230KV 230KV CKT 1	353	353	0.06645	100.9761	BASE CASE
FDNS	06ALL	5	15SP	G15_014	FROM->TO	ELK CITY 230KV (ELKCTY-6) 230/138/13.8KV TRANSFORMER CKT 1	272	316	0.06645	129.9064	BASE CASE
FDNS	06ALL	5	15SP	G15_014	FROM->TO	ELK CITY 230KV (ELKCTY-6) 230/138/13.8KV TRANSFORMER CKT 1	272	316	0.06645	128.6412	BASE CASE
FDNS	06ALL	5	15G	G15_014	FROM->TO	ELK CITY 230KV (ELKCTY-6) 230/138/13.8KV TRANSFORMER CKT 1	287	316	0.06218	116.3419	BASE CASE
FDNS	06ALL	5	15G	G15_014	FROM->TO	ELK CITY 230KV (ELKCTY-6) 230/138/13.8KV TRANSFORMER CKT 1	287	316	0.06218	115.4406	BASE CASE
FDNS	06ALL	5	15WP	G15_014	FROM->TO	ELK CITY 230KV (ELKCTY-6) 230/138/13.8KV TRANSFORMER CKT 1	287	316	0.06838	112.0665	BASE CASE
FDNS	06ALL	5	15WP	G15_014	FROM->TO	ELK CITY 230KV (ELKCTY-6) 230/138/13.8KV TRANSFORMER CKT 1	287	316	0.06838	111.0777	BASE CASE
FDNS	06ALL	5	20SP	G15_014	FROM->TO	ELK CITY 230KV (ELKCTY-6) 230/138/13.8KV TRANSFORMER CKT 1	272	316	0.0665	107.1735	BASE CASE
FDNS	06ALL	5	20SP	G15_014	FROM->TO	ELK CITY 230KV (ELKCTY-6) 230/138/13.8KV TRANSFORMER CKT 1	272	316	0.0665	106.9225	BASE CASE
FDNS	06ALL	5	20WP	G15_014	FROM->TO	ELK CITY 230KV (ELKCTY-6) 230/138/13.8KV TRANSFORMER CKT 1	287	316	0.0658	106.7889	BASE CASE
FDNS	06ALL	5	20WP	G15_014	FROM->TO	ELK CITY 230KV (ELKCTY-6) 230/138/13.8KV TRANSFORMER CKT 1	287	316	0.0658	106.1215	BASE CASE
FDNS	08ALL	0	15WP	G15_015	FROM->TO	CHIKASKIA - KILDARE4 138KV CKT 1	143	143	0.37359	106.4486	HUNTERS7 345.00 - WOODRING 345KV CKT 1
FDNS	08ALL	0	15G	G15_015	FROM->TO	CHIKASKIA - KILDARE4 138KV CKT 1	143	143	0.37384	105.2570	HUNTERS7 345.00 - WOODRING 345KV CKT 1
FDNS	08ALL	0	15SP	G15_015	FROM->TO	CHIKASKIA - KILDARE4 138KV CKT 1	143	143	0.37268	101.8138	HUNTERS7 345.00 - WOODRING 345KV CKT 1
FDNS	00NR	0	20WP	G15_015	FROM->TO	CLEARWATER - GILL ENERGY CENTER WEST 138KV CKT 1	143	143	0.02978	113.7805	GILL ENERGY CENTER SOUTH - VIOLA 4 138.00 138KV CKT 1
FDNS	08NR	2	15G	G15_015	FROM->TO	CLEARWATER - GILL ENERGY CENTER WEST 138KV CKT 1	143	143	0.03037	140.4739	GILL ENERGY CENTER SOUTH - VIOLA 4 138.00 138KV CKT 1
FDNS	00NR	2	15SP	G15_015	FROM->TO	CLEARWATER - GILL ENERGY CENTER WEST 138KV CKT 1	143	143	0.02961	125.3745	GILL ENERGY CENTER SOUTH - VIOLA 4 138.00 138KV CKT 1
FDNS	08NR	2	15G	G15_015	FROM->TO	CLEARWATER - GILL ENERGY CENTER WEST 138KV CKT 1	143	143	0.04346	123.0914	VIOLA 7 345.00 - WICHITA 345KV CKT 1
FDNS	00NR	2	15WP	G15_015	FROM->TO	CLEARWATER - GILL ENERGY CENTER WEST 138KV CKT 1	143	143	0.0304	109.8590	GILL ENERGY CENTER SOUTH - VIOLA 4 138.00 138KV CKT 1
FDNS	08NR	2	15G	G15_015	FROM->TO	CLEARWATER - GILL ENERGY CENTER WEST 138KV CKT 1	143	143	0.03354	108.6563	HUNTERS7 345.00 - WOODRING 345KV CKT 1
FDNS	08NR	2	15G	G15_015	FROM->TO	CLEARWATER - GILL ENERGY CENTER WEST 138KV CKT 1	143	143	0.03354	99.5000	HUNTERS7 345.00 - RENFROW7 345.00 345KV CKT 1
FDNS	08NR	3	15G	G15_015	FROM->TO	CLEARWATER - GILL ENERGY CENTER WEST 138KV CKT 1	143	143	0.03262	157.5275	GILL ENERGY CENTER SOUTH - VIOLA 4 138.00 138KV CKT 1
FDNS	00NR	3	15SP	G15_015	FROM->TO	CLEARWATER - GILL ENERGY CENTER WEST 138KV CKT 1	143	143	0.03176	140.5628	GILL ENERGY CENTER SOUTH - VIOLA 4 138.00 138KV CKT 1
FDNS	08NR	3	15G	G15_015	FROM->TO	CLEARWATER - GILL ENERGY CENTER WEST 138KV CKT 1	143	143	0.04802	134.8752	VIOLA 7 345.00 - WICHITA 345KV CKT 1
FDNS	00NR	3	20SP	G15_015	FROM->TO	CLEARWATER - GILL ENERGY CENTER WEST 138KV CKT 1	143	143	0.03127	130.4082	GILL ENERGY CENTER SOUTH - VIOLA 4 138.00 138KV CKT 1
FDNS	00NR	3	20WP	G15_015	FROM->TO	CLEARWATER - GILL ENERGY CENTER WEST 138KV CKT 1	143	143	0.03206	125.6913	GILL ENERGY CENTER SOUTH - VIOLA 4 138.00 138KV CKT 1
FDNS	08NR	3	15G	G15_015	FROM->TO	CLEARWATER - GILL ENERGY CENTER WEST 138KV CKT 1	143	143	0.03928	124.9763	HUNTERS7 345.00 - WOODRING 345KV CKT 1
FDNS	00NR	3	15WP	G15_015	FROM->TO	CLEARWATER - GILL ENERGY CENTER WEST 138KV CKT 1	143	143	0.03267	121.4853	GILL ENERGY CENTER SOUTH - VIOLA 4 138.00 138KV CKT 1
FDNS	08NR	3	15G	G15_015	FROM->TO	CLEARWATER - GILL ENERGY CENTER WEST 138KV CKT 1	143	143	0.03928	113.7267	HUNTERS7 345.00 - RENFROW7 345.00 345KV CKT 1
FDNS	00NR	3	15SP	G15_015	FROM->TO	CLEARWATER - GILL ENERGY CENTER WEST 138KV CKT 1	143	143	0.03904	100.0000	HUNTERS7 345.00 - WOODRING 345KV CKT 1
FDNS	04NR	0	15G	G15_017	FROM->TO	ARNOLD - RANSOM 115KV CKT 1	79.7	79.7	0.28279	111.7192	MINGO (MINGO) 345/115/13.8KV TRANSFORMER CKT 1
FDNSLock-Blown up	06ALL	0	15G	G15_018		Non-Converged Contingency	0	0	0.44155	-	SPP-SWPS-T59
FDNSLock-Blown up	06ALL	0	15G	G15_018		Non-Converged Contingency	0	0	0.33956	-	SPSCONT-02X
FDNSLock-Blown up	06ALL	0	15G	G15_018		Non-Converged Contingency	276	304	0.31148	-	BAILEY COUNTY INTERCHANGE - G15-018T 115.00 115KV CKT 1
FDNSLock-Blown up	06ALL	0	15G	G15_018		Non-Converged Contingency	0	0	0.31148	-	SPP-SWPS-V12
FDNSLock-Blown up	06ALL	0	15G	G15_018		Non-Converged Contingency	478	502	0.20899	-	TOLK STATION EAST - TUCO INTERCHANGE 230KV CKT 1
FDNSLock-Blown up	06ALL	0	15G	G15_018		Non-Converged Contingency	0	0	0.1964	-	SPSCONT-05AX
FDNSLock-Blown up	06ALL	0	15G	G15_018		Non-Converged Contingency	319	351	0.18126	-	BUSHLAND INTERCHANGE - DEAF SMITH COUNTY INTERCHANGE 230KV CKT 1
FDNSLock-Blown up	06ALL	0	15G	G15_018		Non-Converged Contingency	319	351	0.18126	-	BUSHLAND INTERCHANGE 230KV SWITCHED SHUNT
FDNSLock-Blown up	06ALL	0	15G	G15_018		Non-Converged Contingency	956	994	0.1805	-	G14-074T 345.00 - OKLAUNION 345KV CKT 1
FDNSLock-Blown up	06ALL	0	15G	G15_018		Non-Converged Contingency	956	994	0.1805	-	G14-074T 345.00 - TUCO INTERCHANGE 345KV CKT 1
FDNSLock-Blown up	06ALL	0	15G	G15_018		Non-Converged Contingency	956	994	0.1805	-	OKLAUNION 345KV SWITCHED SHUNT
FDNSLock-Blown up	06ALL	0	15G	G15_018		Non-Converged Contingency	478	502	0.17018	-	NEWHART 230 - PLANT X STATION 230KV CKT 1
FDNSLock-Blown up	06ALL	0	15G	G15_018		Non-Converged Contingency	956	1052	0.16978	-	G14_038T 345.00 - Hitchland Interchange 345KV CKT 1
FDNSLock-Blown up	06ALL	0	15G	G15_018		Non-Converged Contingency	956	1052	0.16978	-	G14_038T 345.00 - POTTER COUNTY INTERCHANGE 345KV CKT 1
FDNSLock-Blown up	06ALL	0	15G	G15_018		Non-Converged Contingency	560	560	0.16978	-	POTTER COUNTY INTERCHANGE (WAUK 90343-A) 345/230/13.2KV TRANSFORMER CKT 1
FDNSLock-Blown up	06ALL	0	15G	G15_018		Non-Converged Contingency	1195	1195	0.16611	-	GRACEMONT - MINCO 345KV CKT 1
FDNSLock-Blown up	06ALL	0	15G	G15_018		Non-Converged Contingency	560	560	0.16433	-	TUCO INTERCHANGE (GE M1022338) 345/230/13.2KV TRANSFORMER CKT 1
FDNSLock-Blown up	06ALL	0	15G	G15_018		Non-Converged Contingency	319	351	0.15912	-	BUSHLAND INTERCHANGE - POTTER COUNTY INTERCHANGE 230KV CKT 1
FDNSLock-Blown up	06ALL	0	15G	G15_018		Non-Converged Contingency	1330	1940	0.15184	-	CHISHOLM7 345.00 - GRACEMONT 345KV CKT 1
FDNSLock-Blown up	06ALL	0	15G	G15_018		Non-Converged Contingency	560	560	0.14937	-	TUCO_2 345.00 (TUCO_2 XFMR) 345/230/13.2KV TRANSFORMER CKT 1
FDNSLock-Blown up	06ALL	0	15G	G15_018		Non-Converged Contingency	0	0	0.14396	-	SPP-SWPS-02

SOLUTION	GROUP	SCENARIO	SEASON	SOURCE	DIRECTION	MONITORED ELEMENT	RATEA (MVA)	RATEB(MVA)	TDF	TC%LOADING (% MVA)	CONTINGENCY
FDNSLock-Blown up	06ALL	0	15G	G15_018		Non-Converged Contingency	560	644	0.14321	-	TUCO INTERCHANGE (SIEM 8743066) 345/230/13.2KV TRANSFORMER CKT 2
FDNSLock-Blown up	06ALL	0	15G	G15_018		Non-Converged Contingency	1792	1792	0.13826	-	CHISHOLM7 345.00 - WOODWARD DISTRICT EHV 345KV CKT 1
FDNSLock-Blown up	06ALL	0	15G	G15_018		Non-Converged Contingency	1792	1792	0.13821	-	BORDER 7345.00 - CHISHOLM7 345.00 345KV CKT 1
FDNSLock-Blown up	06ALL	0	15G	G15_018		Non-Converged Contingency	1792	1792	0.13821	-	BORDER 7345.00 - CHISHOLM7 345.00 345KV CKT 2
FDNSLock-Blown up	06ALL	0	15G	G15_018		Non-Converged Contingency	1420	1775	0.13821	-	BORDER 7345.00 - TUCO_2 345.00 345KV CKT 1
FDNSLock-Blown up	06ALL	0	15G	G15_018		Non-Converged Contingency	1420	1775	0.13821	-	BORDER 7345.00 - TUCO_2 345.00 345KV CKT 2
FDNSLock-Blown up	06ALL	0	15G	G15_018		Non-Converged Contingency	0	0	0.13527	-	SPP-SWPS-03
FDNSLock-Blown up	06ALL	0	15G	G15_018		Non-Converged Contingency	956	1052	0.1287	-	FINNEY SWITCHING STATION - Hitchland Interchange 345KV CKT 1
FDNSLock-Blown up	06ALL	0	15G	G15_018		Non-Converged Contingency	956	1052	0.1287	-	FINNEY SWITCHING STATION - HOLCOMB 345KV CKT 1
FDNSLock-Blown up	06ALL	0	15G	G15_018		Non-Converged Contingency	0	0	0.1287	-	SPP-SWPS-05
FDNSLock-Blown up	06ALL	0	15G	G15_018		Non-Converged Contingency	1420	1775	0.12705	-	TUCO INTERCHANGE - TUCO_2 345.00 345KV CKT 1
FDNSLock-Blown up	06ALL	0	15G	G15_018		Non-Converged Contingency	319	351	0.11621	-	SUNDOWN INTERCHANGE - WOLFFORTH INTERCHANGE 230KV CKT 1
FDNSLock-Blown up	06ALL	0	15G	G15_018		Non-Converged Contingency	478	502	0.11132	-	NEWHART 230 - POTTER COUNTY INTERCHANGE 230KV CKT 1
FDNSLock-Blown up	06ALL	0	15G	G15_018		Non-Converged Contingency	319	351	0.11114	-	LUBBOCK SOUTH INTERCHANGE - WOLFFORTH INTERCHANGE 230KV CKT 1
FDNSLock-Blown up	06ALL	0	15G	G15_018		Non-Converged Contingency	96	96	0.11039	-	CARGILL SUB - DEAF SMITH REC-#24 115KV CKT 1
FDNSLock-Blown up	06ALL	0	15G	G15_018		Non-Converged Contingency	96	96	0.11039	-	CURRY COUNTY INTERCHANGE - DEAF SMITH REC-#20 115KV CKT 1
FDNSLock-Blown up	06ALL	0	15G	G15_018		Non-Converged Contingency	96	96	0.11039	-	DEAF SMITH REC-#20 - PARMER COUNTY SUB 115KV CKT 1
FDNSLock-Blown up	06ALL	0	15G	G15_018		Non-Converged Contingency	96	96	0.11039	-	DEAF SMITH REC-#24 - PARMER COUNTY SUB 115KV CKT 1
FDNSLock-Blown up	06ALL	0	15G	G15_018		Non-Converged Contingency	478	478	0.10187	-	DEAF SMITH COUNTY INTERCHANGE - G14-068T 230.00 230KV CKT 1
FDNSLock-Blown up	06ALL	0	15G	G15_018		Non-Converged Contingency	478	478	0.10187	-	G14-068T 230.00 - PLANT X STATION 230KV CKT 1
FDNSLock-Blown up	06ALL	0	15G	G15_018		Non-Converged Contingency	1420	1775	0.0982	-	G11_051T 345.00 - TATONGA7 345.00 345KV CKT 1
FDNSLock-Blown up	06ALL	0	15G	G15_018		Non-Converged Contingency	1420	1775	0.0982	-	G11_051T 345.00 - WOODWARD DISTRICT EHV 345KV CKT 1
FDNSLock-Blown up	06ALL	0	15G	G15_018		Non-Converged Contingency	1195	1195	0.0982	-	NORTHWEST - TATONGA7 345.00 345KV CKT 1
FDNSLock-Blown up	06ALL	0	15G	G15_018		Non-Converged Contingency	0	0	0.0982	-	SPSCONT-04
FDNSLock-Blown up	06ALL	0	15G	G15_018		Non-Converged Contingency	0	0	0.0982	-	SPSCONT-05B
FDNSLock-Blown up	06ALL	0	15G	G15_018		Non-Converged Contingency	478	502	0.09135	-	TUCO INTERCHANGE - TUCO_2 230.00 230KV CKT 1
FDNSLock-Blown up	06ALL	0	15G	G15_018		Non-Converged Contingency	1420	1775	0.0866	-	G11-14T 345.00 - WOODWARD DISTRICT EHV 345KV CKT 1
FDNSLock-Blown up	06ALL	0	15G	G15_018		Non-Converged Contingency	1420	1775	0.0866	-	G11-14T 345.00 - WOODWARD DISTRICT EHV 345KV CKT 2
FDNSLock-Blown up	06ALL	0	15G	G15_018		Non-Converged Contingency	478	502	0.07553	-	JONES STATION - TUCO INTERCHANGE 230KV CKT 1
FDNSLock-Blown up	06ALL	0	15G	G15_018		Non-Converged Contingency	319	351	0.07497	-	AMARILLO SOUTH INTERCHANGE - SWISHER COUNTY INTERCHANGE 230KV CKT 1
FDNSLock-Blown up	06ALL	0	15G	G15_018		Non-Converged Contingency	439	439	0.07198	-	CHISHOLM6 230.00 - SWEETWATER 230KV CKT 1
FDNSLock-Blown up	06ALL	0	15G	G15_018		Non-Converged Contingency	319	351	0.07198	-	GRAPEVINE INTERCHANGE - STATELINE INTERCHANGE 230KV CKT 1
FDNSLock-Blown up	06ALL	0	15G	G15_018		Non-Converged Contingency	349	395	0.07198	-	STATELINE INTERCHANGE - STLN-DEMARC6 230KV CKT 1
FDNSLock-Blown up	06ALL	0	15G	G15_018		Non-Converged Contingency	396	441	0.07198	-	STLN-DEMARC6 - SWEETWATER 230KV CKT 1
FDNSLock-Blown up	06ALL	0	15G	G15_018		Non-Converged Contingency	478	502	0.07127	-	HITCHLAND INTERCHANGE - MOORE COUNTY INTERCHANGE 230KV CKT 1
FDNSLock-Blown up	06ALL	0	15G	G15_018		Non-Converged Contingency	478	502	0.07127	-	HITCHLAND INTERCHANGE - MOORE COUNTY INTERCHANGE 230KV CKT 1
FDNSLock-Blown up	06ALL	0	15G	G15_018		Non-Converged Contingency	319	351	0.06329	-	GRAPEVINE INTERCHANGE - NICHOLS STATION 230KV CKT 1
FDNSLock-Blown up	06ALL	0	15G	G15_018		Non-Converged Contingency	319	351	0.06256	-	MOORE COUNTY INTERCHANGE - POTTER COUNTY INTERCHANGE 230KV CKT 1
FDNSLock-Blown up	06ALL	0	15G	G15_018		Non-Converged Contingency	319	351	0.06256	-	MOORE COUNTY INTERCHANGE - POTTER COUNTY INTERCHANGE 230KV CKT 1
FDNSLock-Blown up	06ALL	0	15G	G15_018		Non-Converged Contingency	1413	1517	0.06082	-	BUCKNER7 345.00 - SPEARVILLE 345KV CKT 1
FDNSLock-Blown up	06ALL	0	15G	G15_018		Non-Converged Contingency	439	439	0.0583	-	CHISHOLM6 230.00 - ELK CITY 230KV 230KV CKT 1
FDNSLock-Blown up	06ALL	0	15G	G15_018		Non-Converged Contingency	287	316	0.0583	-	ELK CITY 230KV (ELKCTY-6) 230/138/13.8KV TRANSFORMER CKT 1
FDNSLock-Blown up	06ALL	0	15G	G15_018		Non-Converged Contingency	218	239	0.04061	-	WOLFFORTH INTERCHANGE - YUMA INTERCHANGE 115KV CKT 1
FDNSLock-Blown up	06ALL	0	15G	G15_018		Non-Converged Contingency	319	351	0.03261	-	CARLISLE INTERCHANGE - TUCO INTERCHANGE 230KV CKT 1
FDNSLock-Blown up	06ALL	0	15SP	G15_018		Non-Converged Contingency	0	0	0.35203	-	SPSCONT-02X
FDNSLock-Blown up	06ALL	0	15SP	G15_018		Non-Converged Contingency	956	994	0.18665	-	G14-074T 345.00 - OKLAUNION 345KV CKT 1
FDNSLock-Blown up	06ALL	0	15SP	G15_018		Non-Converged Contingency	956	994	0.18665	-	G14-074T 345.00 - TUCO INTERCHANGE 345KV CKT 1
FDNSLock-Blown up	06ALL	0	15SP	G15_018		Non-Converged Contingency	956	1052	0.17602	-	G14_038T 345.00 - Hitchland Interchange 345KV CKT 1
FDNSLock-Blown up	06ALL	0	15SP	G15_018		Non-Converged Contingency	1420	1775	0.14209	-	BORDER 7345.00 - TUCO_2 345.00 345KV CKT 1
FDNSLock-Blown up	06ALL	0	15SP	G15_018		Non-Converged Contingency	1420	1775	0.14209	-	BORDER 7345.00 - TUCO_2 345.00 345KV CKT 2
FDNSLock-Blown up	06ALL	0	15SP	G15_018		Non-Converged Contingency	478	478	0.10305	-	G14-068T 230.00 - PLANT X STATION 230KV CKT 1
FDNSLock-Blown up	06ALL	0	15WP	G15_018		Non-Converged Contingency	1033	1071	0.19174	-	G14-074T 345.00 - OKLAUNION 345KV CKT 1
FDNSLock-Blown up	06ALL	0	20SP	G15_018		Non-Converged Contingency	956	994	0.24579	-	G14-074T 345.00 - OKLAUNION 345KV CKT 1
FDNSLock-Blown up	06ALL	0	20WP	G15_018		Non-Converged Contingency	0	0	0.35088	-	SPSCONT-02X
FDNSLock-Blown up	06ALL	0	20WP	G15_018		Non-Converged Contingency	1033	1071	0.24278	-	G14-074T 345.00 - OKLAUNION 345KV CKT 1
FDNSLock-Blown up	06ALL	0	20WP	G15_018		Non-Converged Contingency	1033	1071	0.24278	-	G14-074T 345.00 - TUCO INTERCHANGE 345KV CKT 1
FDNSLock-Blown up	06ALL	0	20WP	G15_018		Non-Converged Contingency	1420	1775	0.18222	-	BORDER 7345.00 - TUCO_2 345.00 345KV CKT 1
FDNSLock-Blown up	06ALL	0	20WP	G15_018		Non-Converged Contingency	1792	1792	0.18222	-	BORDER 7345.00 - WOODWARD DISTRICT EHV 345KV CKT 1
FDNSLock-Blown up	06ALL	0	20WP	G15_018		Non-Converged Contingency	956	1052	0.17544	-	G14_038T 345.00 - Hitchland Interchange 345KV CKT 1
FDNSLock-Blown up	06ALL	2	15G	G15_018		Non-Converged Contingency	0	0	0.32756	-	SPSCONT-02X
FDNSLock-Blown up	06ALL	2	15G	G15_018		Non-Converged Contingency	956	994	0.18795	-	G14-074T 345.00 - OKLAUNION 345KV CKT 1
FDNSLock-Blown up	06ALL	2	15G	G15_018		Non-Converged Contingency	956	994	0.18795	-	G14-074T 345.00 - TUCO INTERCHANGE 345KV CKT 1
FDNSLock-Blown up	06ALL	2	15G	G15_018		Non-Converged Contingency	956	1052	0.16378	-	G14_038T 345.00 - Hitchland Interchange 345KV CKT 1
FDNSLock-Blown up	06ALL	2	15G	G15_018		Non-Converged Contingency	956	1052	0.16378	-	G14_038T 345.00 - POTTER COUNTY INTERCHANGE 345KV CKT 1
FDNSLock-Blown up	06ALL	2	15G	G15_018		Non-Converged Contingency	560	560	0.16378	-	POTTER COUNTY INTERCHANGE (WAUK 90343-A) 345/230/13.2KV TRANSFORMER CKT 1
FDNSLock-Blown up	06ALL	2	15G	G15_018		Non-Converged Contingency	1420	1775	0.14557	-	BORDER 7345.00 - TUCO_2 345.00 345KV CKT 1
FDNSLock-Blown up	06ALL	2	15G	G15_018		Non-Converged Contingency	1420	1775	0.14557	-	BORDER 7345.00 - TUCO_2 345.00 345KV CKT 2
FDNSLock-Blown up	06ALL	2	15SP	G15_018		Non-Converged Contingency	956	994	0.19358	-	G14-074T 345.00 - OKLAUNION 345KV CKT 1
FDNSLock-Blown up	06ALL	2	15WP	G15_018		Non-Converged Contingency	1033	1071	0.19869	-	G14-074T 345.00 - OKLAUNION 345KV CKT 1
FDNSLock-Blown up	06ALL	3	15G	G15_018		Non-Converged Contingency	0	0	0.45944	-	SPSCONT-02X
FDNSLock-Blown up	06ALL	3	15G	G15_018		Non-Converged Contingency	956	1052	0.22972	-	G14_038T 345.00 - Hitchland Interchange 345KV CKT 1
FDNSLock-Blown up	06ALL	3	15G	G15_018		Non-Converged Contingency	956	1052	0.22972	-	G14_038T 345.00 - POTTER COUNTY INTERCHANGE 345KV CKT 1
FDNSLock-Blown up	06ALL	3	15G	G15_018		Non-Converged Contingency	956	994	0.16605	-	G14-074T 345.00 - OKLAUNION 345KV CKT 1
FDNS	06ALL	0	15G	G15_018	TO->FROM	BUSHLAND INTERCHANGE - DEAF SMITH COUNTY INTERCHANGE 230KV CKT 1	319	351	0.20449	100.9522	DEAF SMITH COUNTY INTERCHANGE - Panda Energy Substation Hereford 115KV CKT 1
FDNS	06ALL	0	15G	G15_018	TO->FROM	BUSHLAND INTERCHANGE - DEAF SMITH COUNTY INTERCHANGE 230KV CKT 1	319	351	0.20449	100.594	DAWN SUB - Panda Energy Substation Hereford 115KV CKT 1

SOLUTION	GROUP	SCENARIO	SEASON	SOURCE	DIRECTION	MONITORED ELEMENT	RATEA (MVA)	RATEB(MVA)	TDF	TC%LOADING (% MVA)	CONTINGENCY
FDNS	06ALL	0	15G	G15_018	TO->FROM	BUSHLAND INTERCHANGE - DEAF SMITH COUNTY INTERCHANGE 230KV CKT 1	319	351	0.20449	100	CANYON WEST SUB - DAWN SUB 115KV CKT 1
FDNS	06ALL	0	15G	G15_018	TO->FROM	BUSHLAND INTERCHANGE - DEAF SMITH COUNTY INTERCHANGE 230KV CKT 1	319	351	0.20449	99.5	SPP-SWPS-W40
FDNS	06NR	0	15G	G15_018	FROM->TO	BUSHLAND INTERCHANGE - HILLSIDE 115KV CKT 1	159	160	0.06333	107.93	BUSHLAND INTERCHANGE - POTTER COUNTY INTERCHANGE 230KV CKT 1
FDNS	06NR	0	15G	G15_018	FROM->TO	BUSHLAND INTERCHANGE (WH 7001795) 230/115/13.2KV TRANSFORMER CKT 1	168	168	0.06333	107.6681	BUSHLAND INTERCHANGE - POTTER COUNTY INTERCHANGE 230KV CKT 1
FDNS	06NR	0	15G	G15_018	FROM->TO	BUSHLAND INTERCHANGE (WH 7001795) 230/115/13.2KV TRANSFORMER CKT 1	168	168	0.06333	105.1644	BUSHLAND INTERCHANGE - POTTER COUNTY INTERCHANGE 230KV CKT 1
FDNS	00NR	0	15WP	G15_018	FROM->TO	BUSHLAND INTERCHANGE (WH 7001795) 230/115/13.2KV TRANSFORMER CKT 1	168	168	0.05919	103.7121	BUSHLAND INTERCHANGE - POTTER COUNTY INTERCHANGE 230KV CKT 1
FDNS	00NR	0	15WP	G15_018	FROM->TO	BUSHLAND INTERCHANGE (WH 7001795) 230/115/13.2KV TRANSFORMER CKT 1	168	168	0.05919	101.6436	BUSHLAND INTERCHANGE - POTTER COUNTY INTERCHANGE 230KV CKT 1
FDNS	06NR	0	15G	G15_018	TO->FROM	CANYON E_TP3115.00 - CANYON WEST SUB 115KV CKT 1	96	96	0.05971	109.4993	BUSHLAND INTERCHANGE - DEAF SMITH COUNTY INTERCHANGE 230KV CKT 1
FDNS	06NR	0	15G	G15_018	FROM->TO	CANYON E_TP3115.00 - OSAGE SWITCHING STATION 115KV CKT 1	96	96	0.05971	99.5	BUSHLAND INTERCHANGE - DEAF SMITH COUNTY INTERCHANGE 230KV CKT 1
FDNS	06NR	0	15G	G15_018	TO->FROM	CANYON WEST SUB - DAWN SUB 115KV CKT 1	96	96	0.05971	120.1946	BUSHLAND INTERCHANGE - DEAF SMITH COUNTY INTERCHANGE 230KV CKT 1
FDNS	06NR	0	15G	G15_018	TO->FROM	CARGILL SUB - DEAF SMITH REC-#24 115KV CKT 1	96	96	0.10513	134.6418	DEAF SMITH COUNTY INTERCHANGE - G14-068T 230.00 230KV CKT 1
FDNS	06NR	0	15G	G15_018	TO->FROM	CARGILL SUB - DEAF SMITH REC-#24 115KV CKT 1	96	96	0.10513	128.943	G14-068T 230.00 - PLANT X STATION 230KV CKT 1
FDNS	06ALL	0	15G	G15_018	TO->FROM	CARGILL SUB - DEAF SMITH REC-#24 115KV CKT 1	96	96	0.11039	105.5446	BASE CASE
FDNS	06ALL	0	15SP	G15_018	TO->FROM	CARGILL SUB - DEAF SMITH REC-#24 115KV CKT 1	96	96	0.11067	101.5046	BASE CASE
FDNS	06NR	0	15G	G15_018	FROM->TO	CARGILL SUB - FRIONA SUB 115KV CKT 1	96	96	0.10513	128.3771	DEAF SMITH COUNTY INTERCHANGE - G14-068T 230.00 230KV CKT 1
FDNS	06NR	0	15G	G15_018	FROM->TO	CARGILL SUB - FRIONA SUB 115KV CKT 1	96	96	0.10513	123.2237	G14-068T 230.00 - PLANT X STATION 230KV CKT 1
FDNS	00NR	0	25SP	G15_018	TO->FROM	CARLISLE INTERCHANGE - TUCO INTERCHANGE 230KV CKT 1	319	351	0.03384	104.6408	JONES STATION - TUCO INTERCHANGE 230KV CKT 1
FDNS	06NR	0	15G	G15_018	TO->FROM	COULTER INTERCHANGE - HILLSIDE 115KV CKT 1	139	160	0.06333	99.7	BUSHLAND INTERCHANGE - POTTER COUNTY INTERCHANGE 230KV CKT 1
FDNS	06NR	0	15G	G15_018	FROM->TO	CURRY COUNTY INTERCHANGE - DEAF SMITH REC-#20 115KV CKT 1	96	96	0.10513	158.0448	DEAF SMITH COUNTY INTERCHANGE - G14-068T 230.00 230KV CKT 1
FDNS	06NR	0	15G	G15_018	FROM->TO	CURRY COUNTY INTERCHANGE - DEAF SMITH REC-#20 115KV CKT 1	96	96	0.10513	152.3417	G14-068T 230.00 - PLANT X STATION 230KV CKT 1
FDNS	06ALL	0	15SP	G15_018	FROM->TO	CURRY COUNTY INTERCHANGE - DEAF SMITH REC-#20 115KV CKT 1	96	96	0.11067	134.4755	BASE CASE
FDNS	06ALL	0	15G	G15_018	FROM->TO	CURRY COUNTY INTERCHANGE - DEAF SMITH REC-#20 115KV CKT 1	96	96	0.11039	128.1788	BASE CASE
FDNS	06ALL	0	20SP	G15_018	FROM->TO	CURRY COUNTY INTERCHANGE - DEAF SMITH REC-#20 115KV CKT 1	96	96	0.10612	125.174	BASE CASE
FDNS	06NR	0	15G	G15_018	FROM->TO	CURRY COUNTY INTERCHANGE - DEAF SMITH REC-#20 115KV CKT 1	96	96	0.10188	121.432	NEWHART 230 - PLANT X STATION 230KV CKT 1
FDNS	06NR	0	15G	G15_018	FROM->TO	CURRY COUNTY INTERCHANGE - DEAF SMITH REC-#20 115KV CKT 1	96	96	0.10167	120.6182	TOLK STATION EAST - TUCO INTERCHANGE 230KV CKT 1
FDNS	06NR	0	15G	G15_018	FROM->TO	CURRY COUNTY INTERCHANGE - DEAF SMITH REC-#20 115KV CKT 1	96	96	0.11801	119.6093	G15-010T 230.00 - TOLK STATION EAST 230KV CKT 1
FDNS	00NR	0	15SP	G15_018	FROM->TO	CURRY COUNTY INTERCHANGE - DEAF SMITH REC-#20 115KV CKT 1	96	96	0.09999	119.5246	DEAF SMITH COUNTY INTERCHANGE - G14-068T 230.00 230KV CKT 1
FDNS	06NR	0	15G	G15_018	FROM->TO	CURRY COUNTY INTERCHANGE - DEAF SMITH REC-#20 115KV CKT 1	96	96	0.14307	119.0311	BAILEY COUNTY INTERCHANGE - G15-018T 115.00 115KV CKT 1
FDNS	06ALL	0	25SP	G15_018	FROM->TO	CURRY COUNTY INTERCHANGE - DEAF SMITH REC-#20 115KV CKT 1	96	96	0.1063	117.7445	BASE CASE
FDNS	06NR	0	15G	G15_018	FROM->TO	CURRY COUNTY INTERCHANGE - DEAF SMITH REC-#20 115KV CKT 1	96	96	0.11773	117.405	ROOSEVELT COUNTY INTERCHANGE - TOLK STATION WEST 230KV CKT 2
FDNS	06NR	0	15G	G15_018	FROM->TO	CURRY COUNTY INTERCHANGE - DEAF SMITH REC-#20 115KV CKT 1	96	96	0.09884	117.1182	G14-074T 345.00 - TUCO INTERCHANGE 345KV CKT 1
FDNS	06NR	0	15G	G15_018	FROM->TO	CURRY COUNTY INTERCHANGE - DEAF SMITH REC-#20 115KV CKT 1	96	96	0.14307	117.1086	SPP-SWPS-V12
FDNS	06NR	0	15G	G15_018	FROM->TO	CURRY COUNTY INTERCHANGE - DEAF SMITH REC-#20 115KV CKT 1	96	96	0.09871	116.7506	SPSCONT-02X
FDNS	06NR	0	15G	G15_018	FROM->TO	CURRY COUNTY INTERCHANGE - DEAF SMITH REC-#20 115KV CKT 1	96	96	0.09882	114.4342	BORDER 7345.00 - TUCO_2 345.00 345KV CKT 1
FDNS	06NR	0	15G	G15_018	FROM->TO	CURRY COUNTY INTERCHANGE - DEAF SMITH REC-#20 115KV CKT 1	96	96	0.09882	114.4342	BORDER 7345.00 - TUCO_2 345.00 345KV CKT 2
FDNS	06NR	0	15G	G15_018	FROM->TO	CURRY COUNTY INTERCHANGE - DEAF SMITH REC-#20 115KV CKT 1	96	96	0.1005	111.599	NEWHART 230 - POTTER COUNTY INTERCHANGE 230KV CKT 1
FDNS	06NR	0	15G	G15_018	FROM->TO	CURRY COUNTY INTERCHANGE - DEAF SMITH REC-#20 115KV CKT 1	96	96	0.09932	111.4901	SUNDOWN INTERCHANGE - WOLFFORTH INTERCHANGE 230KV CKT 1
FDNS	06NR	0	15G	G15_018	FROM->TO	CURRY COUNTY INTERCHANGE - DEAF SMITH REC-#20 115KV CKT 1	96	96	0.09786	110.6717	AMOCO SWITCHING STATION - YOAKUM COUNTY INTERCHANGE 230KV CKT 1
FDNS	06NR	0	15G	G15_018	FROM->TO	CURRY COUNTY INTERCHANGE - DEAF SMITH REC-#20 115KV CKT 1	96	96	0.09773	110.4275	CROSSROADS 345.00 - TOLK STATION 345KV CKT 1
FDNS	06NR	0	15G	G15_018	FROM->TO	CURRY COUNTY INTERCHANGE - DEAF SMITH REC-#20 115KV CKT 1	96	96	0.09921	110.4054	LUBBOCK SOUTH INTERCHANGE - WOLFFORTH INTERCHANGE 230KV CKT 1
FDNS	06NR	0	15G	G15_018	FROM->TO	CURRY COUNTY INTERCHANGE - DEAF SMITH REC-#20 115KV CKT 1	96	96	0.09773	109.8497	TOLK STATION (ABBXNL844501) 345/230/13.2KV TRANSFORMER CKT 1
FDNS	06NR	0	15G	G15_018	FROM->TO	CURRY COUNTY INTERCHANGE - DEAF SMITH REC-#20 115KV CKT 1	96	96	0.14307	109.5583	BAILEY COUNTY INTERCHANGE - PLANT X STATION 115KV CKT 1
FDNS	06NR	0	15G	G15_018	FROM->TO	CURRY COUNTY INTERCHANGE - DEAF SMITH REC-#20 115KV CKT 1	96	96	0.10014	109.27	AMARILLO SOUTH INTERCHANGE - SWISHER COUNTY INTERCHANGE 230KV CKT 1
FDNS	06NR	0	15G	G15_018	FROM->TO	CURRY COUNTY INTERCHANGE - DEAF SMITH REC-#20 115KV CKT 1	96	96	0.10198	109.1986	CHAVES COUNTY INTERCHANGE - EDDY_NORTH 6230.00 230KV CKT 1
FDNS	06NR	0	15G	G15_018	FROM->TO	CURRY COUNTY INTERCHANGE - DEAF SMITH REC-#20 115KV CKT 1	96	96	0.10191	109.0375	SPP-SWPS-26
FDNS	06NR	0	15G	G15_018	FROM->TO	CURRY COUNTY INTERCHANGE - DEAF SMITH REC-#20 115KV CKT 1	96	96	0.09862	105.6076	BASE CASE
FDNS	06NR	0	15G	G15_018	FROM->TO	CURRY COUNTY INTERCHANGE - DEAF SMITH REC-#20 115KV CKT 1	96	96	0.09862	102.2048	GEN526331 1-JONES GEN #1 22 KV
FDNS	06NR	0	15G	G15_018	FROM->TO	CURRY COUNTY INTERCHANGE - DEAF SMITH REC-#20 115KV CKT 1	96	96	0.09862	102.0509	GEN562688 1-G15_014_3 0.6900
FDNS	06NR	0	15G	G15_018	FROM->TO	CURRY COUNTY INTERCHANGE - DEAF SMITH REC-#20 115KV CKT 1	96	96	0.09564	101.9803	CANYON E_TP3115.00 - CANYON WEST SUB 115KV CKT 1
FDNS	06NR	0	15G	G15_018	FROM->TO	CURRY COUNTY INTERCHANGE - DEAF SMITH REC-#20 115KV CKT 1	96	96	0.09862	101.9492	GEN562627 1-ASGI14_002_30.8200
FDNS	06NR	0	15G	G15_018	FROM->TO	CURRY COUNTY INTERCHANGE - DEAF SMITH REC-#20 115KV CKT 1	96	96	0.09862	101.9231	SPP-SWPS-T77
FDNS	06NR	0	15G	G15_018	FROM->TO	CURRY COUNTY INTERCHANGE - DEAF SMITH REC-#20 115KV CKT 1	96	96	0.09862	101.7622	GEN527162 1-MUSTANG GEN #2
FDNS	06NR	0	15G	G15_018	FROM->TO	CURRY COUNTY INTERCHANGE - DEAF SMITH REC-#20 115KV CKT 1	96	96	0.09862	101.7619	GEN527161 1-MUSTANG GEN #1
FDNS	06NR	0	15G	G15_018	FROM->TO	CURRY COUNTY INTERCHANGE - DEAF SMITH REC-#20 115KV CKT 1	96	96	0.09862	101.6284	GEN562739 1-G14_065_3 0.4050
FDNS	06NR	0	15G	G15_018	FROM->TO	CURRY COUNTY INTERCHANGE - DEAF SMITH REC-#20 115KV CKT 1	96	96	0.09862	101.5103	GEN562483 1-G13_027_3 0.6900
FDNS	06NR	0	15G	G15_018	FROM->TO	CURRY COUNTY INTERCHANGE - DEAF SMITH REC-#20 115KV CKT 1	96	96	0.12027	101.306	CURRY COUNTY INTERCHANGE - ROOSEVELT COUNTY INTERCHANGE 115KV CKT 2
FDNS	06NR	0	15G	G15_018	FROM->TO	CURRY COUNTY INTERCHANGE - DEAF SMITH REC-#20 115KV CKT 1	96	96	0.11835	101.0655	ROOSEVELT COUNTY INTERCHANGE (ABB LMM60042) 230/115/13.2KV TRANSFORMER CKT 1
FDNS	06NR	0	15G	G15_018	FROM->TO	CURRY COUNTY INTERCHANGE - DEAF SMITH REC-#20 115KV CKT 1	96	96	0.09564	101.0017	CANYON WEST SUB - DAWN SUB 115KV CKT 1
FDNS	06NR	0	15G	G15_018	FROM->TO	CURRY COUNTY INTERCHANGE - DEAF SMITH REC-#20 115KV CKT 1	96	96	0.09862	100.9916	GEN527163 1-MUSTANG GEN #3 22 KV
FDNS	06NR	0	15G	G15_018	FROM->TO	CURRY COUNTY INTERCHANGE - DEAF SMITH REC-#20 115KV CKT 1	96	96	0.09564	100.7951	DAWN SUB - Panda Energy Substation Hereford 115KV CKT 1
FDNS	06NR	0	15G	G15_018	FROM->TO	CURRY COUNTY INTERCHANGE - DEAF SMITH REC-#20 115KV CKT 1	96	96	0.09862	100.4586	GEN527901 1-HOBBS PLANT #1 (CT)
FDNS	06NR	0	15G	G15_018	FROM->TO	CURRY COUNTY INTERCHANGE - DEAF SMITH REC-#20 115KV CKT 1	96	96	0.09862	100.4586	GEN527902 1-HOBBS PLANT #2 (CT)
FDNS	06NR	0	15G	G15_018	FROM->TO	CURRY COUNTY INTERCHANGE - DEAF SMITH REC-#20 115KV CKT 1	96	96	0.09862	100.4275	GEN527882 1-CUNNINGHAM GEN #2 20 KV
FDNS	06NR	0	15G	G15_018	FROM->TO	CURRY COUNTY INTERCHANGE - DEAF SMITH REC-#20 115KV CKT 1	96	96	0.09564	100.3849	DEAF SMITH COUNTY INTERCHANGE - Panda Energy Substation Hereford 115KV CKT 1
FDNS	06NR	0	15G	G15_018	FROM->TO	CURRY COUNTY INTERCHANGE - DEAF SMITH REC-#20 115KV CKT 1	96	96	0.09862	99.9	GEN527166 1-MUSTANG_6 118.000
FDNS	06NR	0	15G	G15_018	FROM->TO	CURRY COUNTY INTERCHANGE - DEAF SMITH REC-#20 115KV CKT 1	96	96	0.09564	99.9	SPP-SWPS-W40
FDNS	06NR	0	15G	G15_018	FROM->TO	CURRY COUNTY INTERCHANGE - DEAF SMITH REC-#20 115KV CKT 1	96	96	0.11207	99.8	PLEASANT HILL (LIKE POTTER) 230/115/13.2KV TRANSFORMER CKT 1
FDNS	06NR	0	15G	G15_018	FROM->TO	CURRY COUNTY INTERCHANGE - DEAF SMITH REC-#20 115KV CKT 1	96	96	0.09862	99.6	GEN524485 1-CAPROCK WIND GEN
FDNS	06NR	0	15G	G15_018	TO->FROM	DAWN SUB - Panda Energy Substation Hereford 115KV CKT 1	96	96	0.05971	123.2022	BUSHLAND INTERCHANGE - DEAF SMITH COUNTY INTERCHANGE 230KV CKT 1
FDNS	06NR	0	15G	G15_018	FROM->TO	DEAF SMITH COUNTY INTERCHANGE - Panda Energy Substation Hereford 115KV CKT 1	96	96	0.05971	127.828	BUSHLAND INTERCHANGE - DEAF SMITH COUNTY INTERCHANGE 230KV CKT 1
FDNS	00NR	0	15WP	G15_018	FROM->TO	DEAF SMITH COUNTY INTERCHANGE - Panda Energy Substation Hereford 115KV CKT 1	106	106	0.05428	102.4385	BUSHLAND INTERCHANGE - DEAF SMITH COUNTY INTERCHANGE 230KV CKT 1
FDNS	06NR	0	15G	G15_018	FROM->TO	DEAF SMITH REC-#20 - PARMER COUNTY SUB 115KV CKT 1	96	96	0.10513	148.9958	DEAF SMITH COUNTY INTERCHANGE - G14-068T 230.00 230KV CKT 1
FDNS	06NR	0	15G	G15_018	FROM->TO	DEAF SMITH REC-#20 - PARMER COUNTY SUB 115KV CKT 1	96	96	0.10513	143.5446	G14-068T 230.00 - PLANT X STATION 230KV CKT 1
FDNS	06ALL	0	15SP	G15_018	FROM->TO	DEAF SMITH REC-#20 - PARMER COUNTY SUB 115KV CKT 1	96	96	0.11067	121.3248	BASE CASE
FDNS	06ALL	0	15G	G15_018	FROM->TO	DEAF SMITH REC-#20 - PARMER COUNTY SUB 115KV CKT 1	96	96	0.11039	119.1935	BASE CASE

SOLUTION	GROUP	SCENARIO	SEASON	SOURCE	DIRECTION	MONITORED ELEMENT	RATEA (MVA)	RATEB(MVA)	TDF	TC%LOADING (% MVA)	CONTINGENCY
FDNS	06NR	0	15G	G15_018	FROM->TO	DEAF SMITH REC-#20 - PARMER COUNTY SUB 115KV CKT 1	96	96	0.10188	112.7744	NEWHART 230 - PLANT X STATION 230KV CKT 1
FDNS	06NR	0	15G	G15_018	FROM->TO	DEAF SMITH REC-#20 - PARMER COUNTY SUB 115KV CKT 1	96	96	0.10167	111.9526	TOLK STATION EAST - TUCO INTERCHANGE 230KV CKT 1
FDNS	06NR	0	15G	G15_018	FROM->TO	DEAF SMITH REC-#20 - PARMER COUNTY SUB 115KV CKT 1	96	96	0.11801	111.1	G15-010T 230.00 - TOLK STATION EAST 230KV CKT 1
FDNS	06NR	0	15G	G15_018	FROM->TO	DEAF SMITH REC-#20 - PARMER COUNTY SUB 115KV CKT 1	96	96	0.14307	110.5194	BAILEY COUNTY INTERCHANGE - G15-018T 115.00 115KV CKT 1
FDNS	06ALL	0	20SP	G15_018	FROM->TO	DEAF SMITH REC-#20 - PARMER COUNTY SUB 115KV CKT 1	96	96	0.10612	109.5934	BASE CASE
FDNS	06NR	0	15G	G15_018	FROM->TO	DEAF SMITH REC-#20 - PARMER COUNTY SUB 115KV CKT 1	96	96	0.11773	108.9085	ROOSEVELT COUNTY INTERCHANGE - TOLK STATION WEST 230KV CKT 2
FDNS	06NR	0	15G	G15_018	FROM->TO	DEAF SMITH REC-#20 - PARMER COUNTY SUB 115KV CKT 1	96	96	0.14307	108.6277	SPP-SWPS-V12
FDNS	06NR	0	15G	G15_018	FROM->TO	DEAF SMITH REC-#20 - PARMER COUNTY SUB 115KV CKT 1	96	96	0.09884	108.4589	G14-074T 345.00 - TUCO INTERCHANGE 345KV CKT 1
FDNS	06NR	0	15G	G15_018	FROM->TO	DEAF SMITH REC-#20 - PARMER COUNTY SUB 115KV CKT 1	96	96	0.09871	108.0382	SPSCONT-02X
FDNS	00NR	0	15SP	G15_018	FROM->TO	DEAF SMITH REC-#20 - PARMER COUNTY SUB 115KV CKT 1	96	96	0.09999	106.3825	DEAF SMITH COUNTY INTERCHANGE - G14-068T 230.00 230KV CKT 1
FDNS	06NR	0	15G	G15_018	FROM->TO	DEAF SMITH REC-#20 - PARMER COUNTY SUB 115KV CKT 1	96	96	0.09882	105.838	BORDER 7345.00 - TUCO_2 345.00 345KV CKT 1
FDNS	06NR	0	15G	G15_018	FROM->TO	DEAF SMITH REC-#20 - PARMER COUNTY SUB 115KV CKT 1	96	96	0.09882	105.838	BORDER 7345.00 - TUCO_2 345.00 345KV CKT 2
FDNS	06NR	0	15G	G15_018	FROM->TO	DEAF SMITH REC-#20 - PARMER COUNTY SUB 115KV CKT 1	96	96	0.1005	103.0578	NEWHART 230 - POTTER COUNTY INTERCHANGE 230KV CKT 1
FDNS	06NR	0	15G	G15_018	FROM->TO	DEAF SMITH REC-#20 - PARMER COUNTY SUB 115KV CKT 1	96	96	0.09932	102.949	SUNDOWN INTERCHANGE - WOLFFORTH INTERCHANGE 230KV CKT 1
FDNS	06NR	0	15G	G15_018	FROM->TO	DEAF SMITH REC-#20 - PARMER COUNTY SUB 115KV CKT 1	96	96	0.09786	102.143	AMOCO SWITCHING STATION - YOAKUM COUNTY INTERCHANGE 230KV CKT 1
FDNS	06NR	0	15G	G15_018	FROM->TO	DEAF SMITH REC-#20 - PARMER COUNTY SUB 115KV CKT 1	96	96	0.09773	101.9467	CROSSROADS 345.00 - TOLK STATION 345KV CKT 1
FDNS	06NR	0	15G	G15_018	FROM->TO	DEAF SMITH REC-#20 - PARMER COUNTY SUB 115KV CKT 1	96	96	0.09921	101.8692	LUBBOCK SOUTH INTERCHANGE - WOLFFORTH INTERCHANGE 230KV CKT 1
FDNS	06NR	0	15G	G15_018	FROM->TO	DEAF SMITH REC-#20 - PARMER COUNTY SUB 115KV CKT 1	96	96	0.09773	101.395	TOLK STATION (ABBXNL844501) 345/230/13.2KV TRANSFORMER CKT 1
FDNS	06NR	0	15G	G15_018	FROM->TO	DEAF SMITH REC-#20 - PARMER COUNTY SUB 115KV CKT 1	96	96	0.14307	101.1106	BAILEY COUNTY INTERCHANGE - PLANT X STATION 115KV CKT 1
FDNS	06NR	0	15G	G15_018	FROM->TO	DEAF SMITH REC-#20 - PARMER COUNTY SUB 115KV CKT 1	96	96	0.10014	100.7702	AMARILLO SOUTH INTERCHANGE - SWISHER COUNTY INTERCHANGE 230KV CKT 1
FDNS	06NR	0	15G	G15_018	FROM->TO	DEAF SMITH REC-#20 - PARMER COUNTY SUB 115KV CKT 1	96	96	0.10198	100.7402	CHAVES COUNTY INTERCHANGE - EDDY_NORTH 6230.00 230KV CKT 1
FDNS	06NR	0	15G	G15_018	FROM->TO	DEAF SMITH REC-#20 - PARMER COUNTY SUB 115KV CKT 1	96	96	0.10191	100.6094	SPP-SWPS-26
FDNS	06NR	0	15G	G15_018	TO->FROM	DEAF SMITH REC-#24 - PARMER COUNTY SUB 115KV CKT 1	96	96	0.10513	142.8032	DEAF SMITH COUNTY INTERCHANGE - G14-068T 230.00 230KV CKT 1
FDNS	06NR	0	15G	G15_018	TO->FROM	DEAF SMITH REC-#24 - PARMER COUNTY SUB 115KV CKT 1	96	96	0.10513	136.8345	G14-068T 230.00 - PLANT X STATION 230KV CKT 1
FDNS	06ALL	0	15G	G15_018	TO->FROM	DEAF SMITH REC-#24 - PARMER COUNTY SUB 115KV CKT 1	96	96	0.11039	113.7704	BASE CASE
FDNS	06ALL	0	15SP	G15_018	TO->FROM	DEAF SMITH REC-#24 - PARMER COUNTY SUB 115KV CKT 1	96	96	0.11067	113.2753	BASE CASE
FDNS	06NR	0	15G	G15_018	TO->FROM	DEAF SMITH REC-#24 - PARMER COUNTY SUB 115KV CKT 1	96	96	0.10188	106.3615	NEWHART 230 - PLANT X STATION 230KV CKT 1
FDNS	06NR	0	15G	G15_018	TO->FROM	DEAF SMITH REC-#24 - PARMER COUNTY SUB 115KV CKT 1	96	96	0.10167	105.5455	TOLK STATION EAST - TUCO INTERCHANGE 230KV CKT 1
FDNS	06NR	0	15G	G15_018	TO->FROM	DEAF SMITH REC-#24 - PARMER COUNTY SUB 115KV CKT 1	96	96	0.11801	104.3826	G15-010T 230.00 - TOLK STATION EAST 230KV CKT 1
FDNS	06NR	0	15G	G15_018	TO->FROM	DEAF SMITH REC-#24 - PARMER COUNTY SUB 115KV CKT 1	96	96	0.14307	103.8939	BAILEY COUNTY INTERCHANGE - G15-018T 115.00 115KV CKT 1
FDNS	06NR	0	15G	G15_018	TO->FROM	DEAF SMITH REC-#24 - PARMER COUNTY SUB 115KV CKT 1	96	96	0.11773	102.2276	ROOSEVELT COUNTY INTERCHANGE - TOLK STATION WEST 230KV CKT 2
FDNS	06NR	0	15G	G15_018	TO->FROM	DEAF SMITH REC-#24 - PARMER COUNTY SUB 115KV CKT 1	96	96	0.09884	102.1105	G14-074T 345.00 - TUCO INTERCHANGE 345KV CKT 1
FDNS	06NR	0	15G	G15_018	TO->FROM	DEAF SMITH REC-#24 - PARMER COUNTY SUB 115KV CKT 1	96	96	0.14307	102.016	SPP-SWPS-V12
FDNS	06NR	0	15G	G15_018	TO->FROM	DEAF SMITH REC-#24 - PARMER COUNTY SUB 115KV CKT 1	96	96	0.09871	101.5978	SPSCONT-02X
FDNS	06ALL	0	20SP	G15_018	TO->FROM	DEAF SMITH REC-#24 - PARMER COUNTY SUB 115KV CKT 1	96	96	0.10612	101.2457	BASE CASE
FDNS	06NR	0	15G	G15_018	TO->FROM	DEAF SMITH REC-#6 - FRIONA SUB 115KV CKT 1	96	96	0.10513	116.908	DEAF SMITH COUNTY INTERCHANGE - G14-068T 230.00 230KV CKT 1
FDNS	06NR	0	15G	G15_018	TO->FROM	DEAF SMITH REC-#6 - FRIONA SUB 115KV CKT 1	96	96	0.10513	112.256	G14-068T 230.00 - PLANT X STATION 230KV CKT 1
FDNS	06NR	0	15G	G15_018	FROM->TO	DEAF SMITH REC-#6 - HEREFORD INTERCHANGE 115KV CKT 1	96	96	0.10513	113.989	DEAF SMITH COUNTY INTERCHANGE - G14-068T 230.00 230KV CKT 1
FDNS	06NR	0	15G	G15_018	FROM->TO	DEAF SMITH REC-#6 - HEREFORD INTERCHANGE 115KV CKT 1	96	96	0.10513	109.5336	G14-068T 230.00 - PLANT X STATION 230KV CKT 1
FDNS	06ALL	0	15SP	G15_018	FROM->TO	ELK CITY 230KV (ELKCTY-6) 230/138/13.8KV TRANSFORMER CKT 1	272	316	0.06341	125.7575	BASE CASE
FDNS	06ALL	0	15SP	G15_018	FROM->TO	ELK CITY 230KV (ELKCTY-6) 230/138/13.8KV TRANSFORMER CKT 1	272	316	0.06341	124.0328	BASE CASE
FDNS	06ALL	0	15G	G15_018	FROM->TO	ELK CITY 230KV (ELKCTY-6) 230/138/13.8KV TRANSFORMER CKT 1	287	316	0.0583	112.017	BASE CASE
FDNS	06ALL	0	15G	G15_018	FROM->TO	ELK CITY 230KV (ELKCTY-6) 230/138/13.8KV TRANSFORMER CKT 1	287	316	0.0583	110.2834	BASE CASE
FDNS	06ALL	0	15WP	G15_018	FROM->TO	ELK CITY 230KV (ELKCTY-6) 230/138/13.8KV TRANSFORMER CKT 1	287	316	0.06523	107.7723	BASE CASE
FDNS	06ALL	0	15WP	G15_018	FROM->TO	ELK CITY 230KV (ELKCTY-6) 230/138/13.8KV TRANSFORMER CKT 1	287	316	0.06523	106.4302	BASE CASE
FDNS	06ALL	0	20WP	G15_018	TO->FROM	GRAPEVINE INTERCHANGE - NICHOLS STATION 230KV CKT 1	329	361	0.08887	121.1428	BASE CASE
FDNS	06ALL	0	15G	G15_018	TO->FROM	GRAPEVINE INTERCHANGE - NICHOLS STATION 230KV CKT 1	319	351	0.06329	105.2692	BASE CASE
FDNS	06ALL	0	20SP	G15_018	TO->FROM	GRAPEVINE INTERCHANGE - NICHOLS STATION 230KV CKT 1	319	351	0.09074	99.5	BASE CASE
FDNS	06NR	0	15G	G15_018	TO->FROM	LUBBOCK SOUTH INTERCHANGE - WOLFFORTH INTERCHANGE 230KV CKT 1	319	351	0.07317	110.3247	TOLK STATION EAST - TUCO INTERCHANGE 230KV CKT 1
FDNS	06ALL	0	15SP	G15_018	TO->FROM	NEWHART 230 - PLANT X STATION 230KV CKT 1	478	502	0.20197	131.4399	DEAF SMITH COUNTY INTERCHANGE - G14-068T 230.00 230KV CKT 1
FDNS	06ALL	0	15SP	G15_018	TO->FROM	NEWHART 230 - PLANT X STATION 230KV CKT 1	478	502	0.22724	125.803	TOLK STATION EAST - TUCO INTERCHANGE 230KV CKT 1
FDNS	06ALL	0	15SP	G15_018	TO->FROM	NEWHART 230 - PLANT X STATION 230KV CKT 1	478	502	0.21618	112.8584	BUSHLAND INTERCHANGE - DEAF SMITH COUNTY INTERCHANGE 230KV CKT 1
FDNS	06NR	0	15G	G15_018	FROM->TO	SUNDOWN INTERCHANGE - WOLFFORTH INTERCHANGE 230KV CKT 1	319	351	0.07579	116.2358	TOLK STATION EAST - TUCO INTERCHANGE 230KV CKT 1
FDNS	06ALL	0	15G	G15_018	FROM->TO	TERRY COUNTY INTERCHANGE - WOLFFORTH INTERCHANGE 115KV CKT 1	120	154	0.03553	108.5207	BASE CASE
FDNS	06ALL	0	15SP	G15_018	FROM->TO	TOLK STATION EAST - TUCO INTERCHANGE 230KV CKT 1	478	502	0.25238	117.9185	NEWHART 230 - PLANT X STATION 230KV CKT 1
FDNS	06ALL	0	15SP	G15_018	FROM->TO	TOLK STATION EAST - TUCO INTERCHANGE 230KV CKT 1	478	502	0.22893	110.5721	DEAF SMITH COUNTY INTERCHANGE - G14-068T 230.00 230KV CKT 1
FDNS	06ALL	0	15SP	G15_018	FROM->TO	TOLK STATION EAST - TUCO INTERCHANGE 230KV CKT 1	478	502	0.24568	108.8842	SUNDOWN INTERCHANGE - WOLFFORTH INTERCHANGE 230KV CKT 1
FDNS	06ALL	0	15SP	G15_018	FROM->TO	TOLK STATION EAST - TUCO INTERCHANGE 230KV CKT 1	478	502	0.23813	102.2896	LUBBOCK SOUTH INTERCHANGE - WOLFFORTH INTERCHANGE 230KV CKT 1
FDNS	06ALL	0	15SP	G15_018	FROM->TO	TOLK STATION EAST - TUCO INTERCHANGE 230KV CKT 1	478	502	0.24245	102.1725	BUSHLAND INTERCHANGE - DEAF SMITH COUNTY INTERCHANGE 230KV CKT 1
FDNS	06NR	0	15G	G15_018	FROM->TO	TOLK STATION EAST - TUCO INTERCHANGE 230KV CKT 1	478	502	0.12882	101.7543	NEWHART 230 - PLANT X STATION 230KV CKT 1
FDNS	06NR	0	15G	G15_018	FROM->TO	TOLK STATION EAST - TUCO INTERCHANGE 230KV CKT 1	478	502	0.10525	99.9	SPSCONT-02X
FDNS	06ALL	0	15SP	G15_018	FROM->TO	TUCO INTERCHANGE - TUCO_2 230.00 230KV CKT 1	478	502	0.2023	171.3069	TUCO INTERCHANGE - TUCO_2 345.00 345KV CKT 1
FDNS	06ALL	0	15WP	G15_018	FROM->TO	TUCO INTERCHANGE - TUCO_2 230.00 230KV CKT 1	557	557	0.2089	134.3573	TUCO INTERCHANGE - TUCO_2 345.00 345KV CKT 1
FDNS	06ALL	0	15WP	G15_018	FROM->TO	TUCO INTERCHANGE (GE M1022338) 345/230/13.2KV TRANSFORMER CKT 1	560	560	0.25494	123.6189	TUCO INTERCHANGE (SIEM 8743066) 345/230/13.2KV TRANSFORMER CKT 2
FDNS	06ALL	0	15WP	G15_018	FROM->TO	TUCO INTERCHANGE (GE M1022338) 345/230/13.2KV TRANSFORMER CKT 1	560	560	0.25494	121.7966	TUCO INTERCHANGE (SIEM 8743066) 345/230/13.2KV TRANSFORMER CKT 2
FDNS	06ALL	0	15WP	G15_018	FROM->TO	TUCO INTERCHANGE (GE M1022338) 345/230/13.2KV TRANSFORMER CKT 1	560	560	0.25209	120.4848	TUCO_2 345.00 (TUCO_2 XFMR) 345/230/13.2KV TRANSFORMER CKT 1
FDNS	06ALL	0	15WP	G15_018	FROM->TO	TUCO INTERCHANGE (GE M1022338) 345/230/13.2KV TRANSFORMER CKT 1	560	560	0.25209	118.8811	TUCO_2 345.00 (TUCO_2 XFMR) 345/230/13.2KV TRANSFORMER CKT 1
FDNS	06ALL	0	15SP	G15_018	FROM->TO	TUCO INTERCHANGE (GE M1022338) 345/230/13.2KV TRANSFORMER CKT 1	560	560	0.24818	113.3311	TUCO INTERCHANGE (SIEM 8743066) 345/230/13.2KV TRANSFORMER CKT 2
FDNS	06ALL	0	15WP	G15_018	FROM->TO	TUCO INTERCHANGE (GE M1022338) 345/230/13.2KV TRANSFORMER CKT 1	560	560	0.2174	112.9697	TUCO INTERCHANGE - TUCO_2 230.00 230KV CKT 1
FDNS	06ALL	0	15WP	G15_018	FROM->TO	TUCO INTERCHANGE (GE M1022338) 345/230/13.2KV TRANSFORMER CKT 1	560	560	0.2174	111.3776	TUCO INTERCHANGE - TUCO_2 230.00 230KV CKT 1
FDNS	06ALL	0	15SP	G15_018	FROM->TO	TUCO INTERCHANGE (GE M1022338) 345/230/13.2KV TRANSFORMER CKT 1	560	560	0.24818	111.3719	TUCO INTERCHANGE (SIEM 8743066) 345/230/13.2KV TRANSFORMER CKT 2
FDNS	06ALL	0	15SP	G15_018	FROM->TO	TUCO INTERCHANGE (GE M1022338) 345/230/13.2KV TRANSFORMER CKT 1	560	560	0.24554	110.0342	TUCO_2 345.00 (TUCO_2 XFMR) 345/230/13.2KV TRANSFORMER CKT 1
FDNS	06ALL	0	15SP	G15_018	FROM->TO	TUCO INTERCHANGE (GE M1022338) 345/230/13.2KV TRANSFORMER CKT 1	560	560	0.24554	108.332	TUCO_2 345.00 (TUCO_2 XFMR) 345/230/13.2KV TRANSFORMER CKT 1
FDNS	06ALL	0	15SP	G15_018	FROM->TO	TUCO INTERCHANGE (GE M1022338) 345/230/13.2KV TRANSFORMER CKT 1	560	560	0.21116	107.9073	TUCO INTERCHANGE - TUCO_2 230.00 230KV CKT 1
FDNS	06ALL	0	15SP	G15_018	FROM->TO	TUCO INTERCHANGE (GE M1022338) 345/230/13.2KV TRANSFORMER CKT 1	560	560	0.21116	105.9346	TUCO INTERCHANGE - TUCO_2 230.00 230KV CKT 1

SOLUTION	GROUP	SCENARIO	SEASON	SOURCE	DIRECTION	MONITORED ELEMENT	RATEA (MVA)	RATEB(MVA)	TDF	TC%LOADING (% MVA)	CONTINGENCY
FDNS	06ALL	0	15SP	G15_018	FROM->TO	TUCO_2 345.00 (TUCO_2 XFMR) 345/230/13.2KV TRANSFORMER CKT 1	560	560	0.26266	145.8188	TUCO INTERCHANGE - TUCO_2 345.00 345KV CKT 1
FDNS	06ALL	0	15SP	G15_018	FROM->TO	TUCO_2 345.00 (TUCO_2 XFMR) 345/230/13.2KV TRANSFORMER CKT 1	560	560	0.26266	142.7342	TUCO INTERCHANGE - TUCO_2 345.00 345KV CKT 1
FDNS	06ALL	0	15WP	G15_018	FROM->TO	TUCO_2 345.00 (TUCO_2 XFMR) 345/230/13.2KV TRANSFORMER CKT 1	560	560	0.26954	138.8622	TUCO INTERCHANGE - TUCO_2 345.00 345KV CKT 1
FDNS	06ALL	0	15WP	G15_018	FROM->TO	TUCO_2 345.00 (TUCO_2 XFMR) 345/230/13.2KV TRANSFORMER CKT 1	560	560	0.26954	136.3817	TUCO INTERCHANGE - TUCO_2 345.00 345KV CKT 1
FDNS	06NR	0	15G	G15_018	FROM->TO	TUCO_2 345.00 (TUCO_2 XFMR) 345/230/13.2KV TRANSFORMER CKT 1	560	560	0.03211	133.953	TUCO INTERCHANGE - TUCO_2 345.00 345KV CKT 1
FDNS	06NR	0	15G	G15_018	FROM->TO	TUCO_2 345.00 (TUCO_2 XFMR) 345/230/13.2KV TRANSFORMER CKT 1	560	560	0.03211	132.4001	TUCO INTERCHANGE - TUCO_2 345.00 345KV CKT 1
FDNS	06ALL	0	15WP	G15_018	FROM->TO	TUCO_2 345.00 (TUCO_2 XFMR) 345/230/13.2KV TRANSFORMER CKT 1	560	560	0.23445	109.7547	TUCO INTERCHANGE (GE M1022338) 345/230/13.2KV TRANSFORMER CKT 1
FDNS	06ALL	0	15WP	G15_018	FROM->TO	TUCO_2 345.00 (TUCO_2 XFMR) 345/230/13.2KV TRANSFORMER CKT 1	560	560	0.23445	108.6761	TUCO INTERCHANGE (GE M1022338) 345/230/13.2KV TRANSFORMER CKT 1
FDNS	06ALL	0	15WP	G15_018	FROM->TO	TUCO_2 345.00 (TUCO_2 XFMR) 345/230/13.2KV TRANSFORMER CKT 1	560	560	0.22003	102.7663	TUCO INTERCHANGE (SIEM 8743066) 345/230/13.2KV TRANSFORMER CKT 2
FDNS	06ALL	0	15WP	G15_018	FROM->TO	TUCO_2 345.00 (TUCO_2 XFMR) 345/230/13.2KV TRANSFORMER CKT 1	560	560	0.22003	101.7947	TUCO INTERCHANGE (SIEM 8743066) 345/230/13.2KV TRANSFORMER CKT 2
FDNS	06ALL	0	15SP	G15_018	FROM->TO	TUCO_2 345.00 (TUCO_2 XFMR) 345/230/13.2KV TRANSFORMER CKT 1	560	560	0.22849	99.6	TUCO INTERCHANGE (GE M1022338) 345/230/13.2KV TRANSFORMER CKT 1
FDNS	06NR	2	15G	G15_018	TO->FROM	CARGILL SUB - DEAF SMITH REC-#24 115KV CKT 1	96	96	0.1062	113.1149	DEAF SMITH COUNTY INTERCHANGE - G14-068T 230.00 230KV CKT 1
FDNS	06NR	2	15G	G15_018	TO->FROM	CARGILL SUB - DEAF SMITH REC-#24 115KV CKT 1	96	96	0.1062	107.5918	G14-068T 230.00 - PLANT X STATION 230KV CKT 1
FDNS	06NR	2	15G	G15_018	FROM->TO	CARGILL SUB - FRIONA SUB 115KV CKT 1	96	96	0.1062	106.9074	DEAF SMITH COUNTY INTERCHANGE - G14-068T 230.00 230KV CKT 1
FDNS	06NR	2	15G	G15_018	FROM->TO	CARGILL SUB - FRIONA SUB 115KV CKT 1	96	96	0.1062	101.8144	G14-068T 230.00 - PLANT X STATION 230KV CKT 1
FDNS	00NR	2	25SP	G15_018	TO->FROM	CARLISLE INTERCHANGE - TUCO INTERCHANGE 230KV CKT 1	319	351	0.03326	105.1859	JONES STATION - TUCO INTERCHANGE 230KV CKT 1
FDNS	06NR	2	15G	G15_018	FROM->TO	CURRY COUNTY INTERCHANGE - DEAF SMITH REC-#20 115KV CKT 1	96	96	0.1062	136.0589	DEAF SMITH COUNTY INTERCHANGE - G14-068T 230.00 230KV CKT 1
FDNS	06NR	2	15G	G15_018	FROM->TO	CURRY COUNTY INTERCHANGE - DEAF SMITH REC-#20 115KV CKT 1	96	96	0.1062	130.5691	G14-068T 230.00 - PLANT X STATION 230KV CKT 1
FDNS	06ALL	2	15SP	G15_018	FROM->TO	CURRY COUNTY INTERCHANGE - DEAF SMITH REC-#20 115KV CKT 1	96	96	0.108	123.9455	BASE CASE
FDNS	06ALL	2	20SP	G15_018	FROM->TO	CURRY COUNTY INTERCHANGE - DEAF SMITH REC-#20 115KV CKT 1	96	96	0.10373	116.2962	BASE CASE
FDNS	06ALL	2	25SP	G15_018	FROM->TO	CURRY COUNTY INTERCHANGE - DEAF SMITH REC-#20 115KV CKT 1	96	96	0.1039	112.3574	BASE CASE
FDNS	06NR	2	15G	G15_018	FROM->TO	CURRY COUNTY INTERCHANGE - DEAF SMITH REC-#20 115KV CKT 1	96	96	0.09962	109.8298	G14-074T 345.00 - OKLAUNION 345KV CKT 1
FDNS	06ALL	2	15G	G15_018	FROM->TO	CURRY COUNTY INTERCHANGE - DEAF SMITH REC-#20 115KV CKT 1	96	96	0.10794	107.9018	BASE CASE
FDNS	06NR	2	15G	G15_018	FROM->TO	CURRY COUNTY INTERCHANGE - DEAF SMITH REC-#20 115KV CKT 1	96	96	0.11875	107.8214	G15-010T 230.00 - TOLK STATION EAST 230KV CKT 1
FDNS	06NR	2	15G	G15_018	FROM->TO	CURRY COUNTY INTERCHANGE - DEAF SMITH REC-#20 115KV CKT 1	96	96	0.14361	106.9448	BAILEY COUNTY INTERCHANGE - G15-018T 115.00 115KV CKT 1
FDNS	06NR	2	15G	G15_018	FROM->TO	CURRY COUNTY INTERCHANGE - DEAF SMITH REC-#20 115KV CKT 1	96	96	0.11846	105.734	ROOSEVELT COUNTY INTERCHANGE - TOLK STATION WEST 230KV CKT 2
FDNS	06NR	2	15G	G15_018	FROM->TO	CURRY COUNTY INTERCHANGE - DEAF SMITH REC-#20 115KV CKT 1	96	96	0.14361	105.4678	SPP-SWPS-V12
FDNS	06NR	2	15G	G15_018	FROM->TO	CURRY COUNTY INTERCHANGE - DEAF SMITH REC-#20 115KV CKT 1	96	96	0.10253	105.0826	NEWHART 230 - PLANT X STATION 230KV CKT 1
FDNS	06NR	2	15G	G15_018	FROM->TO	CURRY COUNTY INTERCHANGE - DEAF SMITH REC-#20 115KV CKT 1	96	96	0.09962	104.5559	G14-074T 345.00 - TUCO INTERCHANGE 345KV CKT 1
FDNS	06NR	2	15G	G15_018	FROM->TO	CURRY COUNTY INTERCHANGE - DEAF SMITH REC-#20 115KV CKT 1	96	96	0.09872	104.4918	TUCO INTERCHANGE - YOAKUM_345 345.00 345KV CKT 1
FDNS	06NR	2	15G	G15_018	FROM->TO	CURRY COUNTY INTERCHANGE - DEAF SMITH REC-#20 115KV CKT 1	96	96	0.0996	103.3807	BORDER 7345.00 - TUCO_2 345.00 345KV CKT 1
FDNS	06NR	2	15G	G15_018	FROM->TO	CURRY COUNTY INTERCHANGE - DEAF SMITH REC-#20 115KV CKT 1	96	96	0.0996	103.3806	BORDER 7345.00 - TUCO_2 345.00 345KV CKT 2
FDNS	00NR	2	15SP	G15_018	FROM->TO	CURRY COUNTY INTERCHANGE - DEAF SMITH REC-#20 115KV CKT 1	96	96	0.10069	102.589	DEAF SMITH COUNTY INTERCHANGE - G14-068T 230.00 230KV CKT 1
FDNS	06NR	2	15G	G15_018	FROM->TO	CURRY COUNTY INTERCHANGE - DEAF SMITH REC-#20 115KV CKT 1	96	96	0.10194	101.8102	TOLK STATION EAST - TUCO INTERCHANGE 230KV CKT 1
FDNS	06NR	2	15G	G15_018	FROM->TO	CURRY COUNTY INTERCHANGE - DEAF SMITH REC-#20 115KV CKT 1	96	96	0.10285	100.0627	CHAVES COUNTY INTERCHANGE - EDDY_NORTH 6230.00 230KV CKT 1
FDNS	06NR	2	15G	G15_018	FROM->TO	CURRY COUNTY INTERCHANGE - DEAF SMITH REC-#20 115KV CKT 1	96	96	0.10126	99.6	NEWHART 230 - POTTER COUNTY INTERCHANGE 230KV CKT 1
FDNS	06NR	2	15G	G15_018	TO->FROM	DAWN SUB - Panda Energy Substation Hereford 115KV CKT 1	96	96	0.06057	100.6686	BUSHLAND INTERCHANGE - DEAF SMITH COUNTY INTERCHANGE 230KV CKT 1
FDNS	06NR	2	15G	G15_018	FROM->TO	DEAF SMITH COUNTY INTERCHANGE - Panda Energy Substation Hereford 115KV CKT 1	96	96	0.06057	105.2217	BUSHLAND INTERCHANGE - DEAF SMITH COUNTY INTERCHANGE 230KV CKT 1
FDNS	06NR	2	15G	G15_018	FROM->TO	DEAF SMITH REC-#20 - PARMER COUNTY SUB 115KV CKT 1	96	96	0.1062	127.3186	DEAF SMITH COUNTY INTERCHANGE - G14-068T 230.00 230KV CKT 1
FDNS	06NR	2	15G	G15_018	FROM->TO	DEAF SMITH REC-#20 - PARMER COUNTY SUB 115KV CKT 1	96	96	0.1062	122.0338	G14-068T 230.00 - PLANT X STATION 230KV CKT 1
FDNS	06ALL	2	15SP	G15_018	FROM->TO	DEAF SMITH REC-#20 - PARMER COUNTY SUB 115KV CKT 1	96	96	0.108	111.0308	BASE CASE
FDNS	06NR	2	15G	G15_018	FROM->TO	DEAF SMITH REC-#20 - PARMER COUNTY SUB 115KV CKT 1	96	96	0.09962	101.2887	G14-074T 345.00 - OKLAUNION 345KV CKT 1
FDNS	06ALL	2	20SP	G15_018	FROM->TO	DEAF SMITH REC-#20 - PARMER COUNTY SUB 115KV CKT 1	96	96	0.10373	100.9761	BASE CASE
FDNS	06NR	2	15G	G15_018	TO->FROM	DEAF SMITH REC-#24 - PARMER COUNTY SUB 115KV CKT 1	96	96	0.1062	121.0419	DEAF SMITH COUNTY INTERCHANGE - G14-068T 230.00 230KV CKT 1
FDNS	06NR	2	15G	G15_018	TO->FROM	DEAF SMITH REC-#24 - PARMER COUNTY SUB 115KV CKT 1	96	96	0.1062	115.3182	G14-068T 230.00 - PLANT X STATION 230KV CKT 1
FDNS	06ALL	2	15SP	G15_018	TO->FROM	DEAF SMITH REC-#24 - PARMER COUNTY SUB 115KV CKT 1	96	96	0.108	102.83	BASE CASE
FDNS	06ALL	2	15SP	G15_018	FROM->TO	ELK CITY 230KV (ELKCTY-6) 230/138/13.8KV TRANSFORMER CKT 1	272	316	0.06347	125.7818	BASE CASE
FDNS	06ALL	2	15SP	G15_018	FROM->TO	ELK CITY 230KV (ELKCTY-6) 230/138/13.8KV TRANSFORMER CKT 1	272	316	0.06347	124.4125	BASE CASE
FDNS	06ALL	2	15G	G15_018	FROM->TO	ELK CITY 230KV (ELKCTY-6) 230/138/13.8KV TRANSFORMER CKT 1	287	316	0.05882	111.2694	BASE CASE
FDNS	06ALL	2	15G	G15_018	FROM->TO	ELK CITY 230KV (ELKCTY-6) 230/138/13.8KV TRANSFORMER CKT 1	287	316	0.05882	110.3238	BASE CASE
FDNS	06ALL	2	15WP	G15_018	FROM->TO	ELK CITY 230KV (ELKCTY-6) 230/138/13.8KV TRANSFORMER CKT 1	287	316	0.06524	107.6385	BASE CASE
FDNS	06ALL	2	15WP	G15_018	FROM->TO	ELK CITY 230KV (ELKCTY-6) 230/138/13.8KV TRANSFORMER CKT 1	287	316	0.06524	106.6339	BASE CASE
FDNS	06ALL	2	20SP	G15_018	FROM->TO	ELK CITY 230KV (ELKCTY-6) 230/138/13.8KV TRANSFORMER CKT 1	272	316	0.06358	103.949	BASE CASE
FDNS	06ALL	2	20SP	G15_018	FROM->TO	ELK CITY 230KV (ELKCTY-6) 230/138/13.8KV TRANSFORMER CKT 1	272	316	0.06358	103.7414	BASE CASE
FDNS	06ALL	2	20WP	G15_018	FROM->TO	ELK CITY 230KV (ELKCTY-6) 230/138/13.8KV TRANSFORMER CKT 1	287	316	0.06283	101.967	BASE CASE
FDNS	06ALL	2	20WP	G15_018	FROM->TO	ELK CITY 230KV (ELKCTY-6) 230/138/13.8KV TRANSFORMER CKT 1	287	316	0.06283	101.2457	BASE CASE
FDNS	06ALL	2	15G	G15_018	FROM->TO	TUCO INTERCHANGE - TUCO_2 230.00 230KV CKT 1	478	502	0.22002	200.4231	TUCO INTERCHANGE - TUCO_2 345.00 345KV CKT 1
FDNS	06ALL	2	15SP	G15_018	FROM->TO	TUCO INTERCHANGE - TUCO_2 230.00 230KV CKT 1	478	502	0.22593	183.8625	TUCO INTERCHANGE - TUCO_2 345.00 345KV CKT 1
FDNS	06ALL	2	15WP	G15_018	FROM->TO	TUCO INTERCHANGE - TUCO_2 230.00 230KV CKT 1	557	557	0.23302	142.2485	TUCO INTERCHANGE - TUCO_2 345.00 345KV CKT 1
FDNS	06ALL	2	20SP	G15_018	FROM->TO	TUCO INTERCHANGE - TUCO_2 230.00 230KV CKT 1	478	502	0.23288	137.8459	TUCO INTERCHANGE - TUCO_2 345.00 345KV CKT 1
FDNS	06ALL	2	15G	G15_018	FROM->TO	TUCO_2 345.00 (TUCO_2 XFMR) 345/230/13.2KV TRANSFORMER CKT 1	560	560	0.26156	167.6169	TUCO INTERCHANGE - TUCO_2 345.00 345KV CKT 1
FDNS	06ALL	2	15G	G15_018	FROM->TO	TUCO_2 345.00 (TUCO_2 XFMR) 345/230/13.2KV TRANSFORMER CKT 1	560	560	0.26156	164.2629	TUCO INTERCHANGE - TUCO_2 345.00 345KV CKT 1
FDNS	06ALL	2	15SP	G15_018	FROM->TO	TUCO_2 345.00 (TUCO_2 XFMR) 345/230/13.2KV TRANSFORMER CKT 1	560	560	0.26831	149.8147	TUCO INTERCHANGE - TUCO_2 345.00 345KV CKT 1
FDNS	06ALL	2	15SP	G15_018	FROM->TO	TUCO_2 345.00 (TUCO_2 XFMR) 345/230/13.2KV TRANSFORMER CKT 1	560	560	0.26831	147.216	TUCO INTERCHANGE - TUCO_2 345.00 345KV CKT 1
FDNS	06ALL	2	15WP	G15_018	FROM->TO	TUCO_2 345.00 (TUCO_2 XFMR) 345/230/13.2KV TRANSFORMER CKT 1	560	560	0.275	141.8557	TUCO INTERCHANGE - TUCO_2 345.00 345KV CKT 1
FDNS	06ALL	2	15WP	G15_018	FROM->TO	TUCO_2 345.00 (TUCO_2 XFMR) 345/230/13.2KV TRANSFORMER CKT 1	560	560	0.275	139.9334	TUCO INTERCHANGE - TUCO_2 345.00 345KV CKT 1
FDNS	06NR	2	15G	G15_018	FROM->TO	TUCO_2 345.00 (TUCO_2 XFMR) 345/230/13.2KV TRANSFORMER CKT 1	560	560	0.0308	137.5112	TUCO INTERCHANGE - TUCO_2 345.00 345KV CKT 1
FDNS	06NR	2	15G	G15_018	FROM->TO	TUCO_2 345.00 (TUCO_2 XFMR) 345/230/13.2KV TRANSFORMER CKT 1	560	560	0.0308	135.6134	TUCO INTERCHANGE - TUCO_2 345.00 345KV CKT 1
FDNS	06ALL	2	20SP	G15_018	FROM->TO	TUCO_2 345.00 (TUCO_2 XFMR) 345/230/13.2KV TRANSFORMER CKT 1	560	560	0.27019	112.3827	TUCO INTERCHANGE - TUCO_2 345.00 345KV CKT 1
FDNS	06ALL	2	20SP	G15_018	FROM->TO	TUCO_2 345.00 (TUCO_2 XFMR) 345/230/13.2KV TRANSFORMER CKT 1	560	560	0.27019	112.1069	TUCO INTERCHANGE - TUCO_2 345.00 345KV CKT 1
FDNS	00NR	3	25SP	G15_018	TO->FROM	CARLISLE INTERCHANGE - TUCO INTERCHANGE 230KV CKT 1	319	351	0.04081	102.9279	JONES STATION - TUCO INTERCHANGE 230KV CKT 1
FDNS	06ALL	3	15SP	G15_018	FROM->TO	ELK CITY 230KV (ELKCTY-6) 230/138/13.8KV TRANSFORMER CKT 1	272	316	0.06132	123.9727	BASE CASE
FDNS	06ALL	3	15SP	G15_018	FROM->TO	ELK CITY 230KV (ELKCTY-6) 230/138/13.8KV TRANSFORMER CKT 1	272	316	0.06132	122.7526	BASE CASE
FDNS	06ALL	3	15G	G15_018	FROM->TO	ELK CITY 230KV (ELKCTY-6) 230/138/13.8KV TRANSFORMER CKT 1	287	316	0.05668	109.3338	BASE CASE
FDNS	06ALL	3	15G	G15_018	FROM->TO	ELK CITY 230KV (ELKCTY-6) 230/138/13.8KV TRANSFORMER CKT 1	287	316	0.05668	108.4212	BASE CASE

SOLUTION	GROUP	SCENARIO	SEASON	SOURCE	DIRECTION	MONITORED ELEMENT	RATEA (MVA)	RATEB(MVA)	TDF	TC%LOADING (% MVA)	CONTINGENCY
FDNS	06ALL	3	15WP	G15_018	FROM->TO	ELK CITY 230KV (ELKCTY-6) 230/138/13.8KV TRANSFORMER CKT 1	287	316	0.06308	106.1239	BASE CASE
FDNS	06ALL	3	15WP	G15_018	FROM->TO	ELK CITY 230KV (ELKCTY-6) 230/138/13.8KV TRANSFORMER CKT 1	287	316	0.06308	105.1628	BASE CASE
FDNS	06ALL	3	20SP	G15_018	FROM->TO	ELK CITY 230KV (ELKCTY-6) 230/138/13.8KV TRANSFORMER CKT 1	272	316	0.06134	102.7547	BASE CASE
FDNS	06ALL	3	20SP	G15_018	FROM->TO	ELK CITY 230KV (ELKCTY-6) 230/138/13.8KV TRANSFORMER CKT 1	272	316	0.06134	102.5743	BASE CASE
FDNS	06ALL	3	20WP	G15_018	FROM->TO	ELK CITY 230KV (ELKCTY-6) 230/138/13.8KV TRANSFORMER CKT 1	287	316	0.06064	100.8598	BASE CASE
FDNS	06ALL	3	20WP	G15_018	FROM->TO	ELK CITY 230KV (ELKCTY-6) 230/138/13.8KV TRANSFORMER CKT 1	287	316	0.06064	100.2492	BASE CASE
FDNS	06ALL	3	15G	G15_018	TO->FROM	GRAPEVINE INTERCHANGE - NICHOLS STATION 230KV CKT 1	319	351	0.06683	100.925	BASE CASE
FDNS	06ALL	3	15G	G15_018	FROM->TO	TUCO_2 345.00 (TUCO_2 XFMR) 345/230/13.2KV TRANSFORMER CKT 1	560	560	0.22056	151.8506	TUCO INTERCHANGE - TUCO_2 345.00 345KV CKT 1
FDNS	06ALL	3	15G	G15_018	FROM->TO	TUCO_2 345.00 (TUCO_2 XFMR) 345/230/13.2KV TRANSFORMER CKT 1	560	560	0.22056	149.0893	TUCO INTERCHANGE - TUCO_2 345.00 345KV CKT 1
FDNS	06ALL	3	15SP	G15_018	FROM->TO	TUCO_2 345.00 (TUCO_2 XFMR) 345/230/13.2KV TRANSFORMER CKT 1	560	560	0.22652	133.4173	TUCO INTERCHANGE - TUCO_2 345.00 345KV CKT 1
FDNS	06ALL	3	15SP	G15_018	FROM->TO	TUCO_2 345.00 (TUCO_2 XFMR) 345/230/13.2KV TRANSFORMER CKT 1	560	560	0.22652	131.8248	TUCO INTERCHANGE - TUCO_2 345.00 345KV CKT 1
FDNS	06ALL	3	15WP	G15_018	FROM->TO	TUCO_2 345.00 (TUCO_2 XFMR) 345/230/13.2KV TRANSFORMER CKT 1	560	560	0.23272	127.9846	TUCO INTERCHANGE - TUCO_2 345.00 345KV CKT 1
FDNS	06ALL	3	15WP	G15_018	FROM->TO	TUCO_2 345.00 (TUCO_2 XFMR) 345/230/13.2KV TRANSFORMER CKT 1	560	560	0.23272	126.6738	TUCO INTERCHANGE - TUCO_2 345.00 345KV CKT 1
FDNS	06ALL	3	20WP	G15_018	FROM->TO	TUCO_2 345.00 (TUCO_2 XFMR) 345/230/13.2KV TRANSFORMER CKT 1	560	560	0.22574	121.9391	TUCO INTERCHANGE - TUCO_2 345.00 345KV CKT 1
FDNS	06ALL	3	20WP	G15_018	FROM->TO	TUCO_2 345.00 (TUCO_2 XFMR) 345/230/13.2KV TRANSFORMER CKT 1	560	560	0.22574	121.0095	TUCO INTERCHANGE - TUCO_2 345.00 345KV CKT 1
FDNS	06ALL	3	20SP	G15_018	FROM->TO	TUCO_2 345.00 (TUCO_2 XFMR) 345/230/13.2KV TRANSFORMER CKT 1	560	560	0.22848	100.2304	TUCO INTERCHANGE - TUCO_2 345.00 345KV CKT 1
FDNS	06ALL	3	20SP	G15_018	FROM->TO	TUCO_2 345.00 (TUCO_2 XFMR) 345/230/13.2KV TRANSFORMER CKT 1	560	560	0.22848	100.1212	TUCO INTERCHANGE - TUCO_2 345.00 345KV CKT 1
FDNS	00NR	4	25SP	G15_018	TO->FROM	CARLISLE INTERCHANGE - TUCO INTERCHANGE 230KV CKT 1	319	351	0.04156	103.1286	JONES STATION - TUCO INTERCHANGE 230KV CKT 1
FDNS	06ALL	4	15SP	G15_018	FROM->TO	CHISHOLM6 230.00 - ELK CITY 230KV 230KV CKT 1	353	353	0.06734	100.9254	BASE CASE
FDNS	06ALL	4	15SP	G15_018	FROM->TO	ELK CITY 230KV (ELKCTY-6) 230/138/13.8KV TRANSFORMER CKT 1	272	316	0.06734	129.8441	BASE CASE
FDNS	06ALL	4	15SP	G15_018	FROM->TO	ELK CITY 230KV (ELKCTY-6) 230/138/13.8KV TRANSFORMER CKT 1	272	316	0.06734	128.5805	BASE CASE
FDNS	06ALL	4	15G	G15_018	FROM->TO	ELK CITY 230KV (ELKCTY-6) 230/138/13.8KV TRANSFORMER CKT 1	287	316	0.0629	116.3182	BASE CASE
FDNS	06ALL	4	15G	G15_018	FROM->TO	ELK CITY 230KV (ELKCTY-6) 230/138/13.8KV TRANSFORMER CKT 1	287	316	0.0629	115.4161	BASE CASE
FDNS	06ALL	4	15WP	G15_018	FROM->TO	ELK CITY 230KV (ELKCTY-6) 230/138/13.8KV TRANSFORMER CKT 1	287	316	0.06925	112.0283	BASE CASE
FDNS	06ALL	4	15WP	G15_018	FROM->TO	ELK CITY 230KV (ELKCTY-6) 230/138/13.8KV TRANSFORMER CKT 1	287	316	0.06925	111.0401	BASE CASE
FDNS	06ALL	4	20SP	G15_018	FROM->TO	ELK CITY 230KV (ELKCTY-6) 230/138/13.8KV TRANSFORMER CKT 1	272	316	0.06729	107.1637	BASE CASE
FDNS	06ALL	4	20SP	G15_018	FROM->TO	ELK CITY 230KV (ELKCTY-6) 230/138/13.8KV TRANSFORMER CKT 1	272	316	0.06729	106.9127	BASE CASE
FDNS	06ALL	4	20WP	G15_018	FROM->TO	ELK CITY 230KV (ELKCTY-6) 230/138/13.8KV TRANSFORMER CKT 1	287	316	0.06658	106.7868	BASE CASE
FDNS	06ALL	4	20WP	G15_018	FROM->TO	ELK CITY 230KV (ELKCTY-6) 230/138/13.8KV TRANSFORMER CKT 1	287	316	0.06658	106.1189	BASE CASE
FDNS	06ALL	4	15G	G15_018	FROM->TO	POTTER COUNTY INTERCHANGE (WAUK 90343-A) 345/230/13.2KV TRANSFORMER CKT 1	560	560	0.20653	111.314	PLSNT_HILL7 345.00 - POTTER COUNTY INTERCHANGE 345KV CKT 1
FDNS	06ALL	4	15G	G15_018	FROM->TO	POTTER COUNTY INTERCHANGE (WAUK 90343-A) 345/230/13.2KV TRANSFORMER CKT 1	560	560	0.20653	111.0141	PLSNT_HILL7 345.00 - POTTER COUNTY INTERCHANGE 345KV CKT 1
FDNS	00NR	5	25SP	G15_018	TO->FROM	CARLISLE INTERCHANGE - TUCO INTERCHANGE 230KV CKT 1	319	351	0.04176	103.4722	JONES STATION - TUCO INTERCHANGE 230KV CKT 1
FDNS	06ALL	5	15SP	G15_018	FROM->TO	CHISHOLM6 230.00 - ELK CITY 230KV 230KV CKT 1	353	353	0.06739	100.9761	BASE CASE
FDNS	06ALL	5	15SP	G15_018	FROM->TO	ELK CITY 230KV (ELKCTY-6) 230/138/13.8KV TRANSFORMER CKT 1	272	316	0.06739	129.9064	BASE CASE
FDNS	06ALL	5	15SP	G15_018	FROM->TO	ELK CITY 230KV (ELKCTY-6) 230/138/13.8KV TRANSFORMER CKT 1	272	316	0.06739	128.6412	BASE CASE
FDNS	06ALL	5	15G	G15_018	FROM->TO	ELK CITY 230KV (ELKCTY-6) 230/138/13.8KV TRANSFORMER CKT 1	287	316	0.06296	116.3419	BASE CASE
FDNS	06ALL	5	15G	G15_018	FROM->TO	ELK CITY 230KV (ELKCTY-6) 230/138/13.8KV TRANSFORMER CKT 1	287	316	0.06296	115.4406	BASE CASE
FDNS	06ALL	5	15WP	G15_018	FROM->TO	ELK CITY 230KV (ELKCTY-6) 230/138/13.8KV TRANSFORMER CKT 1	287	316	0.06931	112.0665	BASE CASE
FDNS	06ALL	5	15WP	G15_018	FROM->TO	ELK CITY 230KV (ELKCTY-6) 230/138/13.8KV TRANSFORMER CKT 1	287	316	0.06931	111.0777	BASE CASE
FDNS	06ALL	5	20SP	G15_018	FROM->TO	ELK CITY 230KV (ELKCTY-6) 230/138/13.8KV TRANSFORMER CKT 1	272	316	0.06734	107.1735	BASE CASE
FDNS	06ALL	5	20SP	G15_018	FROM->TO	ELK CITY 230KV (ELKCTY-6) 230/138/13.8KV TRANSFORMER CKT 1	272	316	0.06734	106.9225	BASE CASE
FDNS	06ALL	5	20WP	G15_018	FROM->TO	ELK CITY 230KV (ELKCTY-6) 230/138/13.8KV TRANSFORMER CKT 1	287	316	0.06663	106.7889	BASE CASE
FDNS	06ALL	5	20WP	G15_018	FROM->TO	ELK CITY 230KV (ELKCTY-6) 230/138/13.8KV TRANSFORMER CKT 1	287	316	0.06663	106.1215	BASE CASE
FDNS	06ALL	5	15G	G15_018	FROM->TO	POTTER COUNTY INTERCHANGE (WAUK 90343-A) 345/230/13.2KV TRANSFORMER CKT 1	560	560	0.20646	111.2115	PLSNT_HILL7 345.00 - POTTER COUNTY INTERCHANGE 345KV CKT 1
FDNS	06ALL	5	15G	G15_018	FROM->TO	POTTER COUNTY INTERCHANGE (WAUK 90343-A) 345/230/13.2KV TRANSFORMER CKT 1	560	560	0.20646	110.9126	PLSNT_HILL7 345.00 - POTTER COUNTY INTERCHANGE 345KV CKT 1
FDNS	00NR	6	25SP	G15_018	TO->FROM	CARLISLE INTERCHANGE - TUCO INTERCHANGE 230KV CKT 1	319	351	0.04167	103.4261	JONES STATION - TUCO INTERCHANGE 230KV CKT 1
FDNSLock-Blown up	06ALL	0	15G	G15_020		Non-Converged Contingency	0	0	0.4162	-	SPP-SWPS-T59
FDNSLock-Blown up	06ALL	0	15G	G15_020		Non-Converged Contingency	0	0	0.33633	-	SPSCONT-02X
FDNSLock-Blown up	06ALL	0	15G	G15_020		Non-Converged Contingency	478	502	0.22756	-	TOLK STATION EAST - TUCO INTERCHANGE 230KV CKT 1
FDNSLock-Blown up	06ALL	0	15G	G15_020		Non-Converged Contingency	0	0	0.19559	-	SPSCONT-05AX
FDNSLock-Blown up	06ALL	0	15G	G15_020		Non-Converged Contingency	478	502	0.1909	-	NEWHART 230 - PLANT X STATION 230KV CKT 1
FDNSLock-Blown up	06ALL	0	15G	G15_020		Non-Converged Contingency	956	994	0.18192	-	G14-074T 345.00 - OKLAUNION 345KV CKT 1
FDNSLock-Blown up	06ALL	0	15G	G15_020		Non-Converged Contingency	956	994	0.18192	-	G14-074T 345.00 - TUCO INTERCHANGE 345KV CKT 1
FDNSLock-Blown up	06ALL	0	15G	G15_020		Non-Converged Contingency	956	994	0.18192	-	OKLAUNION 345KV SWITCHED SHUNT
FDNSLock-Blown up	06ALL	0	15G	G15_020		Non-Converged Contingency	319	351	0.18089	-	BUSHLAND INTERCHANGE - DEAF SMITH COUNTY INTERCHANGE 230KV CKT 1
FDNSLock-Blown up	06ALL	0	15G	G15_020		Non-Converged Contingency	319	351	0.18089	-	BUSHLAND INTERCHANGE 230KV SWITCHED SHUNT
FDNSLock-Blown up	06ALL	0	15G	G15_020		Non-Converged Contingency	956	1052	0.16816	-	G14_038T 345.00 - Hitchland Interchange 345KV CKT 1
FDNSLock-Blown up	06ALL	0	15G	G15_020		Non-Converged Contingency	956	1052	0.16816	-	G14_038T 345.00 - POTTER COUNTY INTERCHANGE 345KV CKT 1
FDNSLock-Blown up	06ALL	0	15G	G15_020		Non-Converged Contingency	560	560	0.16816	-	POTTER COUNTY INTERCHANGE (WAUK 90343-A) 345/230/13.2KV TRANSFORMER CKT 1
FDNSLock-Blown up	06ALL	0	15G	G15_020		Non-Converged Contingency	1195	1195	0.16681	-	GRACEMONT - MINCO 345KV CKT 1
FDNSLock-Blown up	06ALL	0	15G	G15_020		Non-Converged Contingency	560	560	0.16654	-	TUCO INTERCHANGE (GE M1022338) 345/230/13.2KV TRANSFORMER CKT 1
FDNSLock-Blown up	06ALL	0	15G	G15_020		Non-Converged Contingency	319	351	0.15853	-	BUSHLAND INTERCHANGE - POTTER COUNTY INTERCHANGE 230KV CKT 1
FDNSLock-Blown up	06ALL	0	15G	G15_020		Non-Converged Contingency	1330	1940	0.15204	-	CHISHOLM7 345.00 - GRACEMONT 345KV CKT 1
FDNSLock-Blown up	06ALL	0	15G	G15_020		Non-Converged Contingency	560	560	0.14973	-	TUCO_2 345.00 (TUCO_2 XFMR) 345/230/13.2KV TRANSFORMER CKT 1
FDNSLock-Blown up	06ALL	0	15G	G15_020		Non-Converged Contingency	560	644	0.14513	-	TUCO INTERCHANGE (SIEM 8743066) 345/230/13.2KV TRANSFORMER CKT 2
FDNSLock-Blown up	06ALL	0	15G	G15_020		Non-Converged Contingency	0	0	0.14129	-	SPP-SWPS-02
FDNSLock-Blown up	06ALL	0	15G	G15_020		Non-Converged Contingency	1792	1792	0.13977	-	CHISHOLM7 345.00 - WOODWARD DISTRICT EHV 345KV CKT 1
FDNSLock-Blown up	06ALL	0	15G	G15_020		Non-Converged Contingency	1792	1792	0.13974	-	BORDER 7345.00 - CHISHOLM7 345.00 345KV CKT 1
FDNSLock-Blown up	06ALL	0	15G	G15_020		Non-Converged Contingency	1792	1792	0.13974	-	BORDER 7345.00 - CHISHOLM7 345.00 345KV CKT 2
FDNSLock-Blown up	06ALL	0	15G	G15_020		Non-Converged Contingency	1420	1775	0.13974	-	BORDER 7345.00 - TUCO_2 345.00 345KV CKT 1
FDNSLock-Blown up	06ALL	0	15G	G15_020		Non-Converged Contingency	1420	1775	0.13974	-	BORDER 7345.00 - TUCO_2 345.00 345KV CKT 2
FDNSLock-Blown up	06ALL	0	15G	G15_020		Non-Converged Contingency	0	0	0.13283	-	SPP-SWPS-03
FDNSLock-Blown up	06ALL	0	15G	G15_020		Non-Converged Contingency	1420	1775	0.12976	-	TUCO INTERCHANGE - TUCO_2 345.00 345KV CKT 1
FDNSLock-Blown up	06ALL	0	15G	G15_020		Non-Converged Contingency	956	1052	0.12796	-	FINNEY SWITCHING STATION - Hitchland Interchange 345KV CKT 1
FDNSLock-Blown up	06ALL	0	15G	G15_020		Non-Converged Contingency	956	1052	0.12796	-	FINNEY SWITCHING STATION - HOLCOMB 345KV CKT 1

SOLUTION	GROUP	SCENARIO	SEASON	SOURCE	DIRECTION	MONITORED ELEMENT	RATEA (MVA)	RATEB(MVA)	TDF	TC%LOADING (% MVA)	CONTINGENCY
FDNSLock-Blown up	06ALL	0	15G	G15_020		Non-Converged Contingency	0	0	0.12796	-	SPP-SWPS-05
FDNSLock-Blown up	06ALL	0	15G	G15_020		Non-Converged Contingency	319	351	0.12508	-	SUNDOWN INTERCHANGE - WOLFFORTH INTERCHANGE 230KV CKT 1
FDNSLock-Blown up	06ALL	0	15G	G15_020		Non-Converged Contingency	319	351	0.11994	-	LUBBOCK SOUTH INTERCHANGE - WOLFFORTH INTERCHANGE 230KV CKT 1
FDNSLock-Blown up	06ALL	0	15G	G15_020		Non-Converged Contingency	478	478	0.11939	-	DEAF SMITH COUNTY INTERCHANGE - G14-068T 230.00 230KV CKT 1
FDNSLock-Blown up	06ALL	0	15G	G15_020		Non-Converged Contingency	478	478	0.11939	-	G14-068T 230.00 - PLANT X STATION 230KV CKT 1
FDNSLock-Blown up	06ALL	0	15G	G15_020		Non-Converged Contingency	478	502	0.11113	-	NEWHART 230 - POTTER COUNTY INTERCHANGE 230KV CKT 1
FDNSLock-Blown up	06ALL	0	15G	G15_020		Non-Converged Contingency	96	96	0.10405	-	CARGILL SUB - DEAF SMITH REC-#24 115KV CKT 1
FDNSLock-Blown up	06ALL	0	15G	G15_020		Non-Converged Contingency	96	96	0.10405	-	CURRY COUNTY INTERCHANGE - DEAF SMITH REC-#20 115KV CKT 1
FDNSLock-Blown up	06ALL	0	15G	G15_020		Non-Converged Contingency	96	96	0.10405	-	DEAF SMITH REC-#20 - PARMER COUNTY SUB 115KV CKT 1
FDNSLock-Blown up	06ALL	0	15G	G15_020		Non-Converged Contingency	96	96	0.10405	-	DEAF SMITH REC-#24 - PARMER COUNTY SUB 115KV CKT 1
FDNSLock-Blown up	06ALL	0	15G	G15_020		Non-Converged Contingency	478	502	0.0997	-	TUCO INTERCHANGE - TUCO_2 230.00 230KV CKT 1
FDNSLock-Blown up	06ALL	0	15G	G15_020		Non-Converged Contingency	1420	1775	0.09779	-	G11_051T 345.00 - TATONGA7 345.00 345KV CKT 1
FDNSLock-Blown up	06ALL	0	15G	G15_020		Non-Converged Contingency	1420	1775	0.09779	-	G11_051T 345.00 - WOODWARD DISTRICT EHV 345KV CKT 1
FDNSLock-Blown up	06ALL	0	15G	G15_020		Non-Converged Contingency	1195	1195	0.09779	-	NORTHWEST - TATONGA7 345.00 345KV CKT 1
FDNSLock-Blown up	06ALL	0	15G	G15_020		Non-Converged Contingency	0	0	0.09779	-	SPSCONT-04
FDNSLock-Blown up	06ALL	0	15G	G15_020		Non-Converged Contingency	0	0	0.09779	-	SPSCONT-05B
FDNSLock-Blown up	06ALL	0	15G	G15_020		Non-Converged Contingency	0	0	0.09474	-	SPP-SWPS-06
FDNSLock-Blown up	06ALL	0	15G	G15_020		Non-Converged Contingency	276	304	0.09284	-	BAILEY COUNTY INTERCHANGE - G15-018T 115.00 115KV CKT 1
FDNSLock-Blown up	06ALL	0	15G	G15_020		Non-Converged Contingency	0	0	0.09284	-	SPP-SWPS-V12
FDNSLock-Blown up	06ALL	0	15G	G15_020		Non-Converged Contingency	1420	1775	0.08549	-	G11-14T 345.00 - WOODWARD DISTRICT EHV 345KV CKT 1
FDNSLock-Blown up	06ALL	0	15G	G15_020		Non-Converged Contingency	1420	1775	0.08549	-	G11-14T 345.00 - WOODWARD DISTRICT EHV 345KV CKT 2
FDNSLock-Blown up	06ALL	0	15G	G15_020		Non-Converged Contingency	478	502	0.07921	-	JONES STATION - TUCO INTERCHANGE 230KV CKT 1
FDNSLock-Blown up	06ALL	0	15G	G15_020		Non-Converged Contingency	319	351	0.07494	-	AMARILLO SOUTH INTERCHANGE - SWISHER COUNTY INTERCHANGE 230KV CKT 1
FDNSLock-Blown up	06ALL	0	15G	G15_020		Non-Converged Contingency	439	439	0.07064	-	CHISHOLM6 230.00 - SWEETWATER 230KV CKT 1
FDNSLock-Blown up	06ALL	0	15G	G15_020		Non-Converged Contingency	319	351	0.07064	-	GRAPEVINE INTERCHANGE - STATELINE INTERCHANGE 230KV CKT 1
FDNSLock-Blown up	06ALL	0	15G	G15_020		Non-Converged Contingency	349	395	0.07064	-	STATELINE INTERCHANGE - STLN-DEMARC6 230KV CKT 1
FDNSLock-Blown up	06ALL	0	15G	G15_020		Non-Converged Contingency	396	441	0.07064	-	STLN-DEMARC6 - SWEETWATER 230KV CKT 1
FDNSLock-Blown up	06ALL	0	15G	G15_020		Non-Converged Contingency	478	502	0.07057	-	HITCHLAND INTERCHANGE - MOORE COUNTY INTERCHANGE 230KV CKT 1
FDNSLock-Blown up	06ALL	0	15G	G15_020		Non-Converged Contingency	478	502	0.07057	-	HITCHLAND INTERCHANGE - MOORE COUNTY INTERCHANGE 230KV CKT 1
FDNSLock-Blown up	06ALL	0	15G	G15_020		Non-Converged Contingency	319	351	0.06219	-	GRAPEVINE INTERCHANGE - NICHOLS STATION 230KV CKT 1
FDNSLock-Blown up	06ALL	0	15G	G15_020		Non-Converged Contingency	319	351	0.06201	-	MOORE COUNTY INTERCHANGE - POTTER COUNTY INTERCHANGE 230KV CKT 1
FDNSLock-Blown up	06ALL	0	15G	G15_020		Non-Converged Contingency	319	351	0.06201	-	MOORE COUNTY INTERCHANGE - POTTER COUNTY INTERCHANGE 230KV CKT 1
FDNSLock-Blown up	06ALL	0	15G	G15_020		Non-Converged Contingency	1413	1517	0.06034	-	BUCKNER7 345.00 - SPEARVILLE 345KV CKT 1
FDNSLock-Blown up	06ALL	0	15G	G15_020		Non-Converged Contingency	439	439	0.05832	-	CHISHOLM6 230.00 - ELK CITY 230KV 230KV CKT 1
FDNSLock-Blown up	06ALL	0	15G	G15_020		Non-Converged Contingency	287	316	0.05832	-	ELK CITY 230KV (ELKCTY-6) 230/138/13.8KV TRANSFORMER CKT 1
FDNSLock-Blown up	06ALL	0	15G	G15_020		Non-Converged Contingency	218	239	0.04499	-	WOLFFORTH INTERCHANGE - YUMA INTERCHANGE 115KV CKT 1
FDNSLock-Blown up	06ALL	0	15G	G15_020		Non-Converged Contingency	319	351	0.03881	-	AMOCO SWITCHING STATION - SUNDOWN INTERCHANGE 230KV CKT 1
FDNSLock-Blown up	06ALL	0	15G	G15_020		Non-Converged Contingency	319	351	0.03881	-	AMOCO SWITCHING STATION - YOAKUM COUNTY INTERCHANGE 230KV CKT 1
FDNSLock-Blown up	06ALL	0	15G	G15_020		Non-Converged Contingency	319	351	0.03387	-	CARLISLE INTERCHANGE - TUCO INTERCHANGE 230KV CKT 1
FDNSLock-Blown up	06ALL	0	15SP	G15_020		Non-Converged Contingency	0	0	0.34871	-	SPSCONT-02X
FDNSLock-Blown up	06ALL	0	15SP	G15_020		Non-Converged Contingency	956	994	0.18812	-	G14-074T 345.00 - OKLAUNION 345KV CKT 1
FDNSLock-Blown up	06ALL	0	15SP	G15_020		Non-Converged Contingency	956	994	0.18812	-	G14-074T 345.00 - TUCO INTERCHANGE 345KV CKT 1
FDNSLock-Blown up	06ALL	0	15SP	G15_020		Non-Converged Contingency	956	1052	0.17436	-	G14_038T 345.00 - Hitchland Interchange 345KV CKT 1
FDNSLock-Blown up	06ALL	0	15SP	G15_020		Non-Converged Contingency	1420	1775	0.14368	-	BORDER 7345.00 - TUCO_2 345.00 345KV CKT 1
FDNSLock-Blown up	06ALL	0	15SP	G15_020		Non-Converged Contingency	1420	1775	0.14368	-	BORDER 7345.00 - TUCO_2 345.00 345KV CKT 2
FDNSLock-Blown up	06ALL	0	15SP	G15_020		Non-Converged Contingency	478	478	0.12032	-	G14-068T 230.00 - PLANT X STATION 230KV CKT 1
FDNSLock-Blown up	06ALL	0	15WP	G15_020		Non-Converged Contingency	1033	1071	0.19321	-	G14-074T 345.00 - OKLAUNION 345KV CKT 1
FDNSLock-Blown up	06ALL	0	20SP	G15_020		Non-Converged Contingency	956	994	0.24813	-	G14-074T 345.00 - OKLAUNION 345KV CKT 1
FDNSLock-Blown up	06ALL	0	20WP	G15_020		Non-Converged Contingency	0	0	0.34739	-	SPSCONT-02X
FDNSLock-Blown up	06ALL	0	20WP	G15_020		Non-Converged Contingency	1033	1071	0.24512	-	G14-074T 345.00 - OKLAUNION 345KV CKT 1
FDNSLock-Blown up	06ALL	0	20WP	G15_020		Non-Converged Contingency	1033	1071	0.24512	-	G14-074T 345.00 - TUCO INTERCHANGE 345KV CKT 1
FDNSLock-Blown up	06ALL	0	20WP	G15_020		Non-Converged Contingency	1420	1775	0.18445	-	BORDER 7345.00 - TUCO_2 345.00 345KV CKT 1
FDNSLock-Blown up	06ALL	0	20WP	G15_020		Non-Converged Contingency	1792	1792	0.18445	-	BORDER 7345.00 - WOODWARD DISTRICT EHV 345KV CKT 1
FDNSLock-Blown up	06ALL	0	20WP	G15_020		Non-Converged Contingency	956	1052	0.1737	-	G14_038T 345.00 - Hitchland Interchange 345KV CKT 1
FDNSLock-Blown up	06ALL	2	15G	G15_020		Non-Converged Contingency	0	0	0.3228	-	SPSCONT-02X
FDNSLock-Blown up	06ALL	2	15G	G15_020		Non-Converged Contingency	956	994	0.19001	-	G14-074T 345.00 - OKLAUNION 345KV CKT 1
FDNSLock-Blown up	06ALL	2	15G	G15_020		Non-Converged Contingency	956	994	0.19001	-	G14-074T 345.00 - TUCO INTERCHANGE 345KV CKT 1
FDNSLock-Blown up	06ALL	2	15G	G15_020		Non-Converged Contingency	956	1052	0.1614	-	G14_038T 345.00 - Hitchland Interchange 345KV CKT 1
FDNSLock-Blown up	06ALL	2	15G	G15_020		Non-Converged Contingency	956	1052	0.1614	-	G14_038T 345.00 - POTTER COUNTY INTERCHANGE 345KV CKT 1
FDNSLock-Blown up	06ALL	2	15G	G15_020		Non-Converged Contingency	560	560	0.1614	-	POTTER COUNTY INTERCHANGE (WAUK 90343-A) 345/230/13.2KV TRANSFORMER CKT 1
FDNSLock-Blown up	06ALL	2	15G	G15_020		Non-Converged Contingency	1420	1775	0.14777	-	BORDER 7345.00 - TUCO_2 345.00 345KV CKT 1
FDNSLock-Blown up	06ALL	2	15G	G15_020		Non-Converged Contingency	1420	1775	0.14777	-	BORDER 7345.00 - TUCO_2 345.00 345KV CKT 2
FDNSLock-Blown up	06ALL	2	15SP	G15_020		Non-Converged Contingency	956	994	0.1957	-	G14-074T 345.00 - OKLAUNION 345KV CKT 1
FDNSLock-Blown up	06ALL	2	15WP	G15_020		Non-Converged Contingency	1033	1071	0.20081	-	G14-074T 345.00 - OKLAUNION 345KV CKT 1
FDNSLock-Blown up	06ALL	3	15G	G15_020		Non-Converged Contingency	0	0	0.47183	-	SPSCONT-02X
FDNSLock-Blown up	06ALL	3	15G	G15_020		Non-Converged Contingency	956	1052	0.23592	-	G14_038T 345.00 - Hitchland Interchange 345KV CKT 1
FDNSLock-Blown up	06ALL	3	15G	G15_020		Non-Converged Contingency	956	1052	0.23592	-	G14_038T 345.00 - POTTER COUNTY INTERCHANGE 345KV CKT 1
FDNSLock-Blown up	06ALL	3	15G	G15_020		Non-Converged Contingency	956	994	0.16521	-	G14-074T 345.00 - OKLAUNION 345KV CKT 1
FDNS	06ALL	0	15G	G15_020	TO->FROM	AMOCO SWITCHING STATION - YOAKUM COUNTY INTERCHANGE 230KV CKT 1	319	351	0.03881	104.8902	BASE CASE
FDNS	06ALL	0	15G	G15_020	TO->FROM	BUSHLAND INTERCHANGE - DEAF SMITH COUNTY INTERCHANGE 230KV CKT 1	319	351	0.20338	100.9522	DEAF SMITH COUNTY INTERCHANGE - Panda Energy Substation Hereford 115KV CKT 1
FDNS	06ALL	0	15G	G15_020	TO->FROM	BUSHLAND INTERCHANGE - DEAF SMITH COUNTY INTERCHANGE 230KV CKT 1	319	351	0.20338	100.594	DAWN SUB - Panda Energy Substation Hereford 115KV CKT 1
FDNS	06ALL	0	15G	G15_020	TO->FROM	BUSHLAND INTERCHANGE - DEAF SMITH COUNTY INTERCHANGE 230KV CKT 1	319	351	0.20338	100	CANYON WEST SUB - DAWN SUB 115KV CKT 1
FDNS	06ALL	0	15G	G15_020	TO->FROM	BUSHLAND INTERCHANGE - DEAF SMITH COUNTY INTERCHANGE 230KV CKT 1	319	351	0.20338	99.5	SPP-SWPS-W40
FDNS	06NR	0	15G	G15_020	FROM->TO	BUSHLAND INTERCHANGE - HILLSIDE 115KV CKT 1	159	160	0.0633	107.93	BUSHLAND INTERCHANGE - POTTER COUNTY INTERCHANGE 230KV CKT 1
FDNS	06NR	0	15G	G15_020	FROM->TO	BUSHLAND INTERCHANGE (WH 7001795) 230/115/13.2KV TRANSFORMER CKT 1	168	168	0.0633	107.6681	BUSHLAND INTERCHANGE - POTTER COUNTY INTERCHANGE 230KV CKT 1

SOLUTION	GROUP	SCENARIO	SEASON	SOURCE	DIRECTION	MONITORED ELEMENT	RATEA (MVA)	RATEB(MVA)	TDF	TC%LOADING (% MVA)	CONTINGENCY
FDNS	06NR	0	15G	G15_020	FROM->TO	BUSHLAND INTERCHANGE (WH 7001795) 230/115/13.2KV TRANSFORMER CKT 1	168	168	0.0633	105.1644	BUSHLAND INTERCHANGE - POTTER COUNTY INTERCHANGE 230KV CKT 1
FDNS	00NR	0	15WP	G15_020	FROM->TO	BUSHLAND INTERCHANGE (WH 7001795) 230/115/13.2KV TRANSFORMER CKT 1	168	168	0.05944	103.7121	BUSHLAND INTERCHANGE - POTTER COUNTY INTERCHANGE 230KV CKT 1
FDNS	00NR	0	15WP	G15_020	FROM->TO	BUSHLAND INTERCHANGE (WH 7001795) 230/115/13.2KV TRANSFORMER CKT 1	168	168	0.05944	101.6436	BUSHLAND INTERCHANGE - POTTER COUNTY INTERCHANGE 230KV CKT 1
FDNS	06NR	0	15G	G15_020	TO->FROM	CANYON E_TP3115.00 - CANYON WEST SUB 115KV CKT 1	96	96	0.05817	109.4993	BUSHLAND INTERCHANGE - DEAF SMITH COUNTY INTERCHANGE 230KV CKT 1
FDNS	06NR	0	15G	G15_020	FROM->TO	CANYON E_TP3115.00 - OSAGE SWITCHING STATION 115KV CKT 1	96	96	0.05817	99.5	BUSHLAND INTERCHANGE - DEAF SMITH COUNTY INTERCHANGE 230KV CKT 1
FDNS	06NR	0	15G	G15_020	TO->FROM	CANYON WEST SUB - DAWN SUB 115KV CKT 1	96	96	0.05817	120.1946	BUSHLAND INTERCHANGE - DEAF SMITH COUNTY INTERCHANGE 230KV CKT 1
FDNS	06NR	0	15G	G15_020	TO->FROM	CARGILL SUB - DEAF SMITH REC-#24 115KV CKT 1	96	96	0.10131	134.6418	DEAF SMITH COUNTY INTERCHANGE - G14-068T 230.00 230KV CKT 1
FDNS	06NR	0	15G	G15_020	TO->FROM	CARGILL SUB - DEAF SMITH REC-#24 115KV CKT 1	96	96	0.10131	128.943	G14-068T 230.00 - PLANT X STATION 230KV CKT 1
FDNS	06ALL	0	15G	G15_020	TO->FROM	CARGILL SUB - DEAF SMITH REC-#24 115KV CKT 1	96	96	0.10405	105.5446	BASE CASE
FDNS	06ALL	0	15SP	G15_020	TO->FROM	CARGILL SUB - DEAF SMITH REC-#24 115KV CKT 1	96	96	0.10428	101.5046	BASE CASE
FDNS	06NR	0	15G	G15_020	FROM->TO	CARGILL SUB - FRIONA SUB 115KV CKT 1	96	96	0.10131	128.3771	DEAF SMITH COUNTY INTERCHANGE - G14-068T 230.00 230KV CKT 1
FDNS	06NR	0	15G	G15_020	FROM->TO	CARGILL SUB - FRIONA SUB 115KV CKT 1	96	96	0.10131	123.2237	G14-068T 230.00 - PLANT X STATION 230KV CKT 1
FDNS	00NR	0	25SP	G15_020	TO->FROM	CARLISLE INTERCHANGE - TUCO INTERCHANGE 230KV CKT 1	319	351	0.03451	104.6408	JONES STATION - TUCO INTERCHANGE 230KV CKT 1
FDNS	06NR	0	15G	G15_020	TO->FROM	COULTER INTERCHANGE - HILLSIDE 115KV CKT 1	139	160	0.0633	99.7	BUSHLAND INTERCHANGE - POTTER COUNTY INTERCHANGE 230KV CKT 1
FDNS	06NR	0	15G	G15_020	FROM->TO	CURRY COUNTY INTERCHANGE - DEAF SMITH REC-#20 115KV CKT 1	96	96	0.10131	158.0448	DEAF SMITH COUNTY INTERCHANGE - G14-068T 230.00 230KV CKT 1
FDNS	06NR	0	15G	G15_020	FROM->TO	CURRY COUNTY INTERCHANGE - DEAF SMITH REC-#20 115KV CKT 1	96	96	0.10131	152.3417	G14-068T 230.00 - PLANT X STATION 230KV CKT 1
FDNS	06ALL	0	15SP	G15_020	FROM->TO	CURRY COUNTY INTERCHANGE - DEAF SMITH REC-#20 115KV CKT 1	96	96	0.10428	134.4755	BASE CASE
FDNS	06ALL	0	15G	G15_020	FROM->TO	CURRY COUNTY INTERCHANGE - DEAF SMITH REC-#20 115KV CKT 1	96	96	0.10405	128.1788	BASE CASE
FDNS	06ALL	0	20SP	G15_020	FROM->TO	CURRY COUNTY INTERCHANGE - DEAF SMITH REC-#20 115KV CKT 1	96	96	0.10246	125.174	BASE CASE
FDNS	06NR	0	15G	G15_020	FROM->TO	CURRY COUNTY INTERCHANGE - DEAF SMITH REC-#20 115KV CKT 1	96	96	0.0963	121.432	NEWHART 230 - PLANT X STATION 230KV CKT 1
FDNS	06NR	0	15G	G15_020	FROM->TO	CURRY COUNTY INTERCHANGE - DEAF SMITH REC-#20 115KV CKT 1	96	96	0.09587	120.6182	TOLK STATION EAST - TUCO INTERCHANGE 230KV CKT 1
FDNS	06NR	0	15G	G15_020	FROM->TO	CURRY COUNTY INTERCHANGE - DEAF SMITH REC-#20 115KV CKT 1	96	96	0.11928	119.6093	G15-010T 230.00 - TOLK STATION EAST 230KV CKT 1
FDNS	00NR	0	15SP	G15_020	FROM->TO	CURRY COUNTY INTERCHANGE - DEAF SMITH REC-#20 115KV CKT 1	96	96	0.09616	119.5246	DEAF SMITH COUNTY INTERCHANGE - G14-068T 230.00 230KV CKT 1
FDNS	06NR	0	15G	G15_020	FROM->TO	CURRY COUNTY INTERCHANGE - DEAF SMITH REC-#20 115KV CKT 1	96	96	0.10499	119.0311	BAILEY COUNTY INTERCHANGE - G15-018T 115.00 115KV CKT 1
FDNS	06ALL	0	25SP	G15_020	FROM->TO	CURRY COUNTY INTERCHANGE - DEAF SMITH REC-#20 115KV CKT 1	96	96	0.10264	117.7445	BASE CASE
FDNS	06NR	0	15G	G15_020	FROM->TO	CURRY COUNTY INTERCHANGE - DEAF SMITH REC-#20 115KV CKT 1	96	96	0.11887	117.405	ROOSEVELT COUNTY INTERCHANGE - TOLK STATION WEST 230KV CKT 2
FDNS	06NR	0	15G	G15_020	FROM->TO	CURRY COUNTY INTERCHANGE - DEAF SMITH REC-#20 115KV CKT 1	96	96	0.09252	117.1182	G14-074T 345.00 - TUCO INTERCHANGE 345KV CKT 1
FDNS	06NR	0	15G	G15_020	FROM->TO	CURRY COUNTY INTERCHANGE - DEAF SMITH REC-#20 115KV CKT 1	96	96	0.10499	117.1086	SPP-SWPS-V12
FDNS	06NR	0	15G	G15_020	FROM->TO	CURRY COUNTY INTERCHANGE - DEAF SMITH REC-#20 115KV CKT 1	96	96	0.09239	116.7506	SPSCONT-02X
FDNS	06NR	0	15G	G15_020	FROM->TO	CURRY COUNTY INTERCHANGE - DEAF SMITH REC-#20 115KV CKT 1	96	96	0.0925	114.4342	BORDER 7345.00 - TUCO_2 345.00 345KV CKT 1
FDNS	06NR	0	15G	G15_020	FROM->TO	CURRY COUNTY INTERCHANGE - DEAF SMITH REC-#20 115KV CKT 1	96	96	0.0925	114.4342	BORDER 7345.00 - TUCO_2 345.00 345KV CKT 2
FDNS	06NR	0	15G	G15_020	FROM->TO	CURRY COUNTY INTERCHANGE - DEAF SMITH REC-#20 115KV CKT 1	96	96	0.09416	111.599	NEWHART 230 - POTTER COUNTY INTERCHANGE 230KV CKT 1
FDNS	06NR	0	15G	G15_020	FROM->TO	CURRY COUNTY INTERCHANGE - DEAF SMITH REC-#20 115KV CKT 1	96	96	0.09312	111.4901	SUNDOWN INTERCHANGE - WOLFFORTH INTERCHANGE 230KV CKT 1
FDNS	06NR	0	15G	G15_020	FROM->TO	CURRY COUNTY INTERCHANGE - DEAF SMITH REC-#20 115KV CKT 1	96	96	0.09166	110.6717	AMOCO SWITCHING STATION - YOAKUM COUNTY INTERCHANGE 230KV CKT 1
FDNS	06NR	0	15G	G15_020	FROM->TO	CURRY COUNTY INTERCHANGE - DEAF SMITH REC-#20 115KV CKT 1	96	96	0.09162	110.4275	CROSSROADS 345.00 - TOLK STATION 345KV CKT 1
FDNS	06NR	0	15G	G15_020	FROM->TO	CURRY COUNTY INTERCHANGE - DEAF SMITH REC-#20 115KV CKT 1	96	96	0.09299	110.4054	LUBBOCK SOUTH INTERCHANGE - WOLFFORTH INTERCHANGE 230KV CKT 1
FDNS	06NR	0	15G	G15_020	FROM->TO	CURRY COUNTY INTERCHANGE - DEAF SMITH REC-#20 115KV CKT 1	96	96	0.09162	109.8497	TOLK STATION (ABBXNL844501) 345/230/13.2KV TRANSFORMER CKT 1
FDNS	06NR	0	15G	G15_020	FROM->TO	CURRY COUNTY INTERCHANGE - DEAF SMITH REC-#20 115KV CKT 1	96	96	0.10499	109.5583	BAILEY COUNTY INTERCHANGE - PLANT X STATION 115KV CKT 1
FDNS	06NR	0	15G	G15_020	FROM->TO	CURRY COUNTY INTERCHANGE - DEAF SMITH REC-#20 115KV CKT 1	96	96	0.09381	109.27	AMARILLO SOUTH INTERCHANGE - SWISHER COUNTY INTERCHANGE 230KV CKT 1
FDNS	06NR	0	15G	G15_020	FROM->TO	CURRY COUNTY INTERCHANGE - DEAF SMITH REC-#20 115KV CKT 1	96	96	0.09673	109.1986	CHAVES COUNTY INTERCHANGE - EDDY_NORTH 6230.00 230KV CKT 1
FDNS	06NR	0	15G	G15_020	FROM->TO	CURRY COUNTY INTERCHANGE - DEAF SMITH REC-#20 115KV CKT 1	96	96	0.09383	109.0375	SPP-SWPS-26
FDNS	06NR	0	15G	G15_020	FROM->TO	CURRY COUNTY INTERCHANGE - DEAF SMITH REC-#20 115KV CKT 1	96	96	0.09228	105.6076	BASE CASE
FDNS	06NR	0	15G	G15_020	FROM->TO	CURRY COUNTY INTERCHANGE - DEAF SMITH REC-#20 115KV CKT 1	96	96	0.09228	102.2048	GEN526331 1-JONES GEN #1 22 KV
FDNS	06NR	0	15G	G15_020	FROM->TO	CURRY COUNTY INTERCHANGE - DEAF SMITH REC-#20 115KV CKT 1	96	96	0.09228	102.0509	GEN562688 1-G15_014_3 0.6900
FDNS	06NR	0	15G	G15_020	FROM->TO	CURRY COUNTY INTERCHANGE - DEAF SMITH REC-#20 115KV CKT 1	96	96	0.08943	101.9803	CANYON E_TP3115.00 - CANYON WEST SUB 115KV CKT 1
FDNS	06NR	0	15G	G15_020	FROM->TO	CURRY COUNTY INTERCHANGE - DEAF SMITH REC-#20 115KV CKT 1	96	96	0.09228	101.9492	GEN562627 1-ASGI14_002_30.8200
FDNS	06NR	0	15G	G15_020	FROM->TO	CURRY COUNTY INTERCHANGE - DEAF SMITH REC-#20 115KV CKT 1	96	96	0.09228	101.9231	SPP-SWPS-T77
FDNS	06NR	0	15G	G15_020	FROM->TO	CURRY COUNTY INTERCHANGE - DEAF SMITH REC-#20 115KV CKT 1	96	96	0.09228	101.7622	GEN527162 1-MUSTANG GEN #2
FDNS	06NR	0	15G	G15_020	FROM->TO	CURRY COUNTY INTERCHANGE - DEAF SMITH REC-#20 115KV CKT 1	96	96	0.09228	101.7619	GEN527161 1-MUSTANG GEN #1
FDNS	06NR	0	15G	G15_020	FROM->TO	CURRY COUNTY INTERCHANGE - DEAF SMITH REC-#20 115KV CKT 1	96	96	0.09228	101.6284	GEN562739 1-G14_065_3 0.4050
FDNS	06NR	0	15G	G15_020	FROM->TO	CURRY COUNTY INTERCHANGE - DEAF SMITH REC-#20 115KV CKT 1	96	96	0.09228	101.5103	GEN562483 1-G13_027_3 0.6900
FDNS	06NR	0	15G	G15_020	FROM->TO	CURRY COUNTY INTERCHANGE - DEAF SMITH REC-#20 115KV CKT 1	96	96	0.09416	101.306	CURRY COUNTY INTERCHANGE - ROOSEVELT COUNTY INTERCHANGE 115KV CKT 2
FDNS	06NR	0	15G	G15_020	FROM->TO	CURRY COUNTY INTERCHANGE - DEAF SMITH REC-#20 115KV CKT 1	96	96	0.1086	101.0655	ROOSEVELT COUNTY INTERCHANGE (ABB LMM60042) 230/115/13.2KV TRANSFORMER CKT 1
FDNS	06NR	0	15G	G15_020	FROM->TO	CURRY COUNTY INTERCHANGE - DEAF SMITH REC-#20 115KV CKT 1	96	96	0.08943	101.0017	CANYON WEST SUB - DAWN SUB 115KV CKT 1
FDNS	06NR	0	15G	G15_020	FROM->TO	CURRY COUNTY INTERCHANGE - DEAF SMITH REC-#20 115KV CKT 1	96	96	0.09228	100.9916	GEN527163 1-MUSTANG GEN #3 22 KV
FDNS	06NR	0	15G	G15_020	FROM->TO	CURRY COUNTY INTERCHANGE - DEAF SMITH REC-#20 115KV CKT 1	96	96	0.08943	100.7951	DAWN SUB - Panda Energy Substation Hereford 115KV CKT 1
FDNS	06NR	0	15G	G15_020	FROM->TO	CURRY COUNTY INTERCHANGE - DEAF SMITH REC-#20 115KV CKT 1	96	96	0.09228	100.4586	GEN527901 1-HOBBS PLANT #1 (CT)
FDNS	06NR	0	15G	G15_020	FROM->TO	CURRY COUNTY INTERCHANGE - DEAF SMITH REC-#20 115KV CKT 1	96	96	0.09228	100.4586	GEN527902 1-HOBBS PLANT #2 (CT)
FDNS	06NR	0	15G	G15_020	FROM->TO	CURRY COUNTY INTERCHANGE - DEAF SMITH REC-#20 115KV CKT 1	96	96	0.09228	100.4275	GEN527882 1-CUNNINGHAM GEN #2 20 KV
FDNS	06NR	0	15G	G15_020	FROM->TO	CURRY COUNTY INTERCHANGE - DEAF SMITH REC-#20 115KV CKT 1	96	96	0.08943	100.3849	DEAF SMITH COUNTY INTERCHANGE - Panda Energy Substation Hereford 115KV CKT 1
FDNS	06NR	0	15G	G15_020	FROM->TO	CURRY COUNTY INTERCHANGE - DEAF SMITH REC-#20 115KV CKT 1	96	96	0.09228	99.9	GEN527166 1-MUSTANG_6 118.000
FDNS	06NR	0	15G	G15_020	FROM->TO	CURRY COUNTY INTERCHANGE - DEAF SMITH REC-#20 115KV CKT 1	96	96	0.08943	99.9	SPP-SWPS-W40
FDNS	06NR	0	15G	G15_020	FROM->TO	CURRY COUNTY INTERCHANGE - DEAF SMITH REC-#20 115KV CKT 1	96	96	0.09942	99.8	PLEASANT HILL (LIKE POTTER) 230/115/13.2KV TRANSFORMER CKT 1
FDNS	06NR	0	15G	G15_020	FROM->TO	CURRY COUNTY INTERCHANGE - DEAF SMITH REC-#20 115KV CKT 1	96	96	0.09228	99.6	GEN524485 1-CAPROCK WIND GEN
FDNS	06NR	0	15G	G15_020	TO->FROM	DAWN SUB - Panda Energy Substation Hereford 115KV CKT 1	96	96	0.05817	123.2022	BUSHLAND INTERCHANGE - DEAF SMITH COUNTY INTERCHANGE 230KV CKT 1
FDNS	06NR	0	15G	G15_020	FROM->TO	DEAF SMITH COUNTY INTERCHANGE - Panda Energy Substation Hereford 115KV CKT 1	96	96	0.05817	127.828	BUSHLAND INTERCHANGE - DEAF SMITH COUNTY INTERCHANGE 230KV CKT 1
FDNS	00NR	0	15WP	G15_020	FROM->TO	DEAF SMITH COUNTY INTERCHANGE - Panda Energy Substation Hereford 115KV CKT 1	106	106	0.0531	102.4385	BUSHLAND INTERCHANGE - DEAF SMITH COUNTY INTERCHANGE 230KV CKT 1
FDNS	06NR	0	15G	G15_020	FROM->TO	DEAF SMITH REC-#20 - PARMER COUNTY SUB 115KV CKT 1	96	96	0.10131	148.9958	DEAF SMITH COUNTY INTERCHANGE - G14-068T 230.00 230KV CKT 1
FDNS	06NR	0	15G	G15_020	FROM->TO	DEAF SMITH REC-#20 - PARMER COUNTY SUB 115KV CKT 1	96	96	0.10131	143.5446	G14-068T 230.00 - PLANT X STATION 230KV CKT 1
FDNS	06ALL	0	15SP	G15_020	FROM->TO	DEAF SMITH REC-#20 - PARMER COUNTY SUB 115KV CKT 1	96	96	0.10428	121.3248	BASE CASE
FDNS	06ALL	0	15G	G15_020	FROM->TO	DEAF SMITH REC-#20 - PARMER COUNTY SUB 115KV CKT 1	96	96	0.10405	119.1935	BASE CASE
FDNS	06NR	0	15G	G15_020	FROM->TO	DEAF SMITH REC-#20 - PARMER COUNTY SUB 115KV CKT 1	96	96	0.0963	112.7744	NEWHART 230 - PLANT X STATION 230KV CKT 1
FDNS	06NR	0	15G	G15_020	FROM->TO	DEAF SMITH REC-#20 - PARMER COUNTY SUB 115KV CKT 1	96	96	0.09587	111.9526	TOLK STATION EAST - TUCO INTERCHANGE 230KV CKT 1
FDNS	06NR	0	15G	G15_020	FROM->TO	DEAF SMITH REC-#20 - PARMER COUNTY SUB 115KV CKT 1	96	96	0.11928	111.1	G15-010T 230.00 - TOLK STATION EAST 230KV CKT 1
FDNS	06NR	0	15G	G15_020	FROM->TO	DEAF SMITH REC-#20 - PARMER COUNTY SUB 115KV CKT 1	96	96	0.10499	110.5194	BAILEY COUNTY INTERCHANGE - G15-018T 115.00 115KV CKT 1

SOLUTION	GROUP	SCENARIO	SEASON	SOURCE	DIRECTION	MONITORED ELEMENT	RATEA (MVA)	RATEB(MVA)	TDF	TC%LOADING (% MVA)	CONTINGENCY
FDNS	06ALL	0	20SP	G15_020	FROM->TO	DEAF SMITH REC-#20 - PARMER COUNTY SUB 115KV CKT 1	96	96	0.10246	109.5934	BASE CASE
FDNS	06NR	0	15G	G15_020	FROM->TO	DEAF SMITH REC-#20 - PARMER COUNTY SUB 115KV CKT 1	96	96	0.11887	108.9085	ROOSEVELT COUNTY INTERCHANGE - TOLK STATION WEST 230KV CKT 2
FDNS	06NR	0	15G	G15_020	FROM->TO	DEAF SMITH REC-#20 - PARMER COUNTY SUB 115KV CKT 1	96	96	0.10499	108.6277	SPP-SWPS-V12
FDNS	06NR	0	15G	G15_020	FROM->TO	DEAF SMITH REC-#20 - PARMER COUNTY SUB 115KV CKT 1	96	96	0.09252	108.4589	G14-074T 345.00 - TUCO INTERCHANGE 345KV CKT 1
FDNS	06NR	0	15G	G15_020	FROM->TO	DEAF SMITH REC-#20 - PARMER COUNTY SUB 115KV CKT 1	96	96	0.09239	108.0382	SPSCONT-02X
FDNS	00NR	0	15SP	G15_020	FROM->TO	DEAF SMITH REC-#20 - PARMER COUNTY SUB 115KV CKT 1	96	96	0.09616	106.3825	DEAF SMITH COUNTY INTERCHANGE - G14-068T 230.00 230KV CKT 1
FDNS	06NR	0	15G	G15_020	FROM->TO	DEAF SMITH REC-#20 - PARMER COUNTY SUB 115KV CKT 1	96	96	0.0925	105.838	BORDER 7345.00 - TUCO_2 345.00 345KV CKT 1
FDNS	06NR	0	15G	G15_020	FROM->TO	DEAF SMITH REC-#20 - PARMER COUNTY SUB 115KV CKT 1	96	96	0.0925	105.838	BORDER 7345.00 - TUCO_2 345.00 345KV CKT 2
FDNS	06NR	0	15G	G15_020	FROM->TO	DEAF SMITH REC-#20 - PARMER COUNTY SUB 115KV CKT 1	96	96	0.09416	103.0578	NEWHART 230 - POTTER COUNTY INTERCHANGE 230KV CKT 1
FDNS	06NR	0	15G	G15_020	FROM->TO	DEAF SMITH REC-#20 - PARMER COUNTY SUB 115KV CKT 1	96	96	0.09312	102.949	SUNDOWN INTERCHANGE - WOLFFORTH INTERCHANGE 230KV CKT 1
FDNS	06NR	0	15G	G15_020	FROM->TO	DEAF SMITH REC-#20 - PARMER COUNTY SUB 115KV CKT 1	96	96	0.09166	102.143	AMOCO SWITCHING STATION - YOAKUM COUNTY INTERCHANGE 230KV CKT 1
FDNS	06NR	0	15G	G15_020	FROM->TO	DEAF SMITH REC-#20 - PARMER COUNTY SUB 115KV CKT 1	96	96	0.09162	101.9467	CROSSROADS 345.00 - TOLK STATION 345KV CKT 1
FDNS	06NR	0	15G	G15_020	FROM->TO	DEAF SMITH REC-#20 - PARMER COUNTY SUB 115KV CKT 1	96	96	0.09299	101.8692	LUBBOCK SOUTH INTERCHANGE - WOLFFORTH INTERCHANGE 230KV CKT 1
FDNS	06NR	0	15G	G15_020	FROM->TO	DEAF SMITH REC-#20 - PARMER COUNTY SUB 115KV CKT 1	96	96	0.09162	101.395	TOLK STATION (ABBXNL844501) 345/230/13.2KV TRANSFORMER CKT 1
FDNS	06NR	0	15G	G15_020	FROM->TO	DEAF SMITH REC-#20 - PARMER COUNTY SUB 115KV CKT 1	96	96	0.10499	101.1106	BAILEY COUNTY INTERCHANGE - PLANT X STATION 115KV CKT 1
FDNS	06NR	0	15G	G15_020	FROM->TO	DEAF SMITH REC-#20 - PARMER COUNTY SUB 115KV CKT 1	96	96	0.09381	100.7702	AMARILLO SOUTH INTERCHANGE - SWISHER COUNTY INTERCHANGE 230KV CKT 1
FDNS	06NR	0	15G	G15_020	FROM->TO	DEAF SMITH REC-#20 - PARMER COUNTY SUB 115KV CKT 1	96	96	0.09673	100.7402	CHAVES COUNTY INTERCHANGE - EDDY_NORTH 6230.00 230KV CKT 1
FDNS	06NR	0	15G	G15_020	FROM->TO	DEAF SMITH REC-#20 - PARMER COUNTY SUB 115KV CKT 1	96	96	0.09383	100.6094	SPP-SWPS-26
FDNS	06NR	0	15G	G15_020	TO->FROM	DEAF SMITH REC-#24 - PARMER COUNTY SUB 115KV CKT 1	96	96	0.10131	142.8032	DEAF SMITH COUNTY INTERCHANGE - G14-068T 230.00 230KV CKT 1
FDNS	06NR	0	15G	G15_020	TO->FROM	DEAF SMITH REC-#24 - PARMER COUNTY SUB 115KV CKT 1	96	96	0.10131	136.8345	G14-068T 230.00 - PLANT X STATION 230KV CKT 1
FDNS	06ALL	0	15G	G15_020	TO->FROM	DEAF SMITH REC-#24 - PARMER COUNTY SUB 115KV CKT 1	96	96	0.10405	113.7704	BASE CASE
FDNS	06ALL	0	15SP	G15_020	TO->FROM	DEAF SMITH REC-#24 - PARMER COUNTY SUB 115KV CKT 1	96	96	0.10428	113.2753	BASE CASE
FDNS	06NR	0	15G	G15_020	TO->FROM	DEAF SMITH REC-#24 - PARMER COUNTY SUB 115KV CKT 1	96	96	0.0963	106.3615	NEWHART 230 - PLANT X STATION 230KV CKT 1
FDNS	06NR	0	15G	G15_020	TO->FROM	DEAF SMITH REC-#24 - PARMER COUNTY SUB 115KV CKT 1	96	96	0.09587	105.5455	TOLK STATION EAST - TUCO INTERCHANGE 230KV CKT 1
FDNS	06NR	0	15G	G15_020	TO->FROM	DEAF SMITH REC-#24 - PARMER COUNTY SUB 115KV CKT 1	96	96	0.11928	104.3826	G15-010T 230.00 - TOLK STATION EAST 230KV CKT 1
FDNS	06NR	0	15G	G15_020	TO->FROM	DEAF SMITH REC-#24 - PARMER COUNTY SUB 115KV CKT 1	96	96	0.10499	103.8939	BAILEY COUNTY INTERCHANGE - G15-018T 115.00 115KV CKT 1
FDNS	06NR	0	15G	G15_020	TO->FROM	DEAF SMITH REC-#24 - PARMER COUNTY SUB 115KV CKT 1	96	96	0.11887	102.2276	ROOSEVELT COUNTY INTERCHANGE - TOLK STATION WEST 230KV CKT 2
FDNS	06NR	0	15G	G15_020	TO->FROM	DEAF SMITH REC-#24 - PARMER COUNTY SUB 115KV CKT 1	96	96	0.09252	102.1105	G14-074T 345.00 - TUCO INTERCHANGE 345KV CKT 1
FDNS	06NR	0	15G	G15_020	TO->FROM	DEAF SMITH REC-#24 - PARMER COUNTY SUB 115KV CKT 1	96	96	0.10499	102.016	SPP-SWPS-V12
FDNS	06NR	0	15G	G15_020	TO->FROM	DEAF SMITH REC-#24 - PARMER COUNTY SUB 115KV CKT 1	96	96	0.09239	101.5978	SPSCONT-02X
FDNS	06ALL	0	20SP	G15_020	TO->FROM	DEAF SMITH REC-#24 - PARMER COUNTY SUB 115KV CKT 1	96	96	0.10246	101.2457	BASE CASE
FDNS	06NR	0	15G	G15_020	TO->FROM	DEAF SMITH REC-#6 - FRIONA SUB 115KV CKT 1	96	96	0.10131	116.908	DEAF SMITH COUNTY INTERCHANGE - G14-068T 230.00 230KV CKT 1
FDNS	06NR	0	15G	G15_020	TO->FROM	DEAF SMITH REC-#6 - FRIONA SUB 115KV CKT 1	96	96	0.10131	112.256	G14-068T 230.00 - PLANT X STATION 230KV CKT 1
FDNS	06NR	0	15G	G15_020	FROM->TO	DEAF SMITH REC-#6 - HEREFORD INTERCHANGE 115KV CKT 1	96	96	0.10131	113.989	DEAF SMITH COUNTY INTERCHANGE - G14-068T 230.00 230KV CKT 1
FDNS	06NR	0	15G	G15_020	FROM->TO	DEAF SMITH REC-#6 - HEREFORD INTERCHANGE 115KV CKT 1	96	96	0.10131	109.5336	G14-068T 230.00 - PLANT X STATION 230KV CKT 1
FDNS	06ALL	0	15SP	G15_020	FROM->TO	ELK CITY 230KV (ELKCTY-6) 230/138/13.8KV TRANSFORMER CKT 1	272	316	0.06341	125.7575	BASE CASE
FDNS	06ALL	0	15SP	G15_020	FROM->TO	ELK CITY 230KV (ELKCTY-6) 230/138/13.8KV TRANSFORMER CKT 1	272	316	0.06341	124.0328	BASE CASE
FDNS	06ALL	0	15G	G15_020	FROM->TO	ELK CITY 230KV (ELKCTY-6) 230/138/13.8KV TRANSFORMER CKT 1	287	316	0.05832	112.017	BASE CASE
FDNS	06ALL	0	15G	G15_020	FROM->TO	ELK CITY 230KV (ELKCTY-6) 230/138/13.8KV TRANSFORMER CKT 1	287	316	0.05832	110.2834	BASE CASE
FDNS	06ALL	0	15WP	G15_020	FROM->TO	ELK CITY 230KV (ELKCTY-6) 230/138/13.8KV TRANSFORMER CKT 1	287	316	0.06524	107.7723	BASE CASE
FDNS	06ALL	0	15WP	G15_020	FROM->TO	ELK CITY 230KV (ELKCTY-6) 230/138/13.8KV TRANSFORMER CKT 1	287	316	0.06524	106.4302	BASE CASE
FDNS	06ALL	0	20WP	G15_020	TO->FROM	GRAPEVINE INTERCHANGE - NICHOLS STATION 230KV CKT 1	329	361	0.08794	121.1428	BASE CASE
FDNS	06ALL	0	15G	G15_020	TO->FROM	GRAPEVINE INTERCHANGE - NICHOLS STATION 230KV CKT 1	319	351	0.06219	105.2692	BASE CASE
FDNS	06ALL	0	20SP	G15_020	TO->FROM	GRAPEVINE INTERCHANGE - NICHOLS STATION 230KV CKT 1	319	351	0.08981	99.5	BASE CASE
FDNS	06NR	0	15G	G15_020	TO->FROM	LUBBOCK SOUTH INTERCHANGE - WOLFFORTH INTERCHANGE 230KV CKT 1	319	351	0.08696	110.3247	TOLK STATION EAST - TUCO INTERCHANGE 230KV CKT 1
FDNS	06ALL	0	15SP	G15_020	TO->FROM	NEWHART 230 - PLANT X STATION 230KV CKT 1	478	502	0.23011	131.4399	DEAF SMITH COUNTY INTERCHANGE - G14-068T 230.00 230KV CKT 1
FDNS	06ALL	0	15SP	G15_020	TO->FROM	NEWHART 230 - PLANT X STATION 230KV CKT 1	478	502	0.25488	125.803	TOLK STATION EAST - TUCO INTERCHANGE 230KV CKT 1
FDNS	06ALL	0	15SP	G15_020	TO->FROM	NEWHART 230 - PLANT X STATION 230KV CKT 1	478	502	0.23859	112.8584	BUSHLAND INTERCHANGE - DEAF SMITH COUNTY INTERCHANGE 230KV CKT 1
FDNS	06ALL	0	15SP	G15_020	TO->FROM	NEWHART 230 - PLANT X STATION 230KV CKT 1	478	502	0.21291	105.469	SUNDOWN INTERCHANGE - WOLFFORTH INTERCHANGE 230KV CKT 1
FDNS	06ALL	0	15SP	G15_020	TO->FROM	NEWHART 230 - PLANT X STATION 230KV CKT 1	478	502	0.21533	102.0972	BUSHLAND INTERCHANGE - POTTER COUNTY INTERCHANGE 230KV CKT 1
FDNS	06ALL	0	15SP	G15_020	TO->FROM	NEWHART 230 - PLANT X STATION 230KV CKT 1	478	502	0.20769	101.3263	LUBBOCK SOUTH INTERCHANGE - WOLFFORTH INTERCHANGE 230KV CKT 1
FDNS	06ALL	0	20SP	G15_020	TO->FROM	NEWHART 230 - PLANT X STATION 230KV CKT 1	478	502	0.21492	100	DEAF SMITH COUNTY INTERCHANGE - G14-068T 230.00 230KV CKT 1
FDNS	06ALL	0	20SP	G15_020	TO->FROM	NEWHART 230 - PLANT X STATION 230KV CKT 1	478	502	0.21492	100	G14-068T 230.00 - PLANT X STATION 230KV CKT 1
FDNS	06NR	0	15G	G15_020	TO->FROM	PLANT X STATION - TOLK STATION EAST 230KV CKT 2	478	502	0.09803	120.665	SPP-SWPS-06
FDNS	06NR	0	15G	G15_020	TO->FROM	PLANT X STATION - TOLK STATION EAST 230KV CKT 2	478	502	0.0749	117.4765	TOLK STATION TAP - TOLK STATION WEST 230KV CKT @1
FDNS	06ALL	0	15SP	G15_020	TO->FROM	PLANT X STATION - TOLK STATION WEST 230KV CKT 1	478	502	0.2003	105.4413	PLANT X STATION - TOLK STATION WEST 230KV CKT 2
FDNS	06ALL	0	15SP	G15_020	TO->FROM	PLANT X STATION - TOLK STATION WEST 230KV CKT 2	478	502	0.2003	105.4413	PLANT X STATION - TOLK STATION WEST 230KV CKT 1
FDNS	06NR	0	15G	G15_020	FROM->TO	SUNDOWN INTERCHANGE - WOLFFORTH INTERCHANGE 230KV CKT 1	319	351	0.08996	116.2358	TOLK STATION EAST - TUCO INTERCHANGE 230KV CKT 1
FDNS	06ALL	0	15G	G15_020	FROM->TO	TERRY COUNTY INTERCHANGE - WOLFFORTH INTERCHANGE 115KV CKT 1	120	154	0.03985	108.5207	BASE CASE
FDNS	06ALL	0	15SP	G15_020	FROM->TO	TOLK STATION EAST - TUCO INTERCHANGE 230KV CKT 1	478	502	0.27653	117.9185	NEWHART 230 - PLANT X STATION 230KV CKT 1
FDNS	06ALL	0	15SP	G15_020	FROM->TO	TOLK STATION EAST - TUCO INTERCHANGE 230KV CKT 1	478	502	0.25056	110.5721	DEAF SMITH COUNTY INTERCHANGE - G14-068T 230.00 230KV CKT 1
FDNS	06ALL	0	15SP	G15_020	FROM->TO	TOLK STATION EAST - TUCO INTERCHANGE 230KV CKT 1	478	502	0.26688	108.8842	SUNDOWN INTERCHANGE - WOLFFORTH INTERCHANGE 230KV CKT 1
FDNS	06ALL	0	15SP	G15_020	FROM->TO	TOLK STATION EAST - TUCO INTERCHANGE 230KV CKT 1	478	502	0.25884	102.2896	LUBBOCK SOUTH INTERCHANGE - WOLFFORTH INTERCHANGE 230KV CKT 1
FDNS	06ALL	0	15SP	G15_020	FROM->TO	TOLK STATION EAST - TUCO INTERCHANGE 230KV CKT 1	478	502	0.26105	102.1725	BUSHLAND INTERCHANGE - DEAF SMITH COUNTY INTERCHANGE 230KV CKT 1
FDNS	06NR	0	15G	G15_020	FROM->TO	TOLK STATION EAST - TUCO INTERCHANGE 230KV CKT 1	478	502	0.15265	101.7543	NEWHART 230 - PLANT X STATION 230KV CKT 1
FDNS	06NR	0	15G	G15_020	FROM->TO	TOLK STATION EAST - TUCO INTERCHANGE 230KV CKT 1	478	502	0.1237	99.9	SPSCONT-02X
FDNS	06NR	0	15G	G15_020	FROM->TO	TOLK STATION TAP - TOLK STATION WEST 230KV CKT @1	478	610	0.05969	121.5622	TOLK STATION EAST - TUCO INTERCHANGE 230KV CKT 1
FDNS	06NR	0	15G	G15_020	FROM->TO	TOLK STATION TAP - TOLK STATION WEST 230KV CKT @1	478	610	0.06219	113.3713	PLANT X STATION - TOLK STATION EAST 230KV CKT 2
FDNS	06ALL	0	15SP	G15_020	FROM->TO	TUCO INTERCHANGE - TUCO_2 230.00 230KV CKT 1	478	502	0.21354	171.3069	TUCO INTERCHANGE - TUCO_2 345.00 345KV CKT 1
FDNS	06ALL	0	15WP	G15_020	FROM->TO	TUCO INTERCHANGE - TUCO_2 230.00 230KV CKT 1	557	557	0.22013	134.3573	TUCO INTERCHANGE - TUCO_2 345.00 345KV CKT 1
FDNS	06ALL	0	15WP	G15_020	FROM->TO	TUCO INTERCHANGE (GE M1022338) 345/230/13.2KV TRANSFORMER CKT 1	560	560	0.25831	123.6189	TUCO INTERCHANGE (SIEM 8743066) 345/230/13.2KV TRANSFORMER CKT 2
FDNS	06ALL	0	15WP	G15_020	FROM->TO	TUCO INTERCHANGE (GE M1022338) 345/230/13.2KV TRANSFORMER CKT 1	560	560	0.25831	121.7966	TUCO INTERCHANGE (SIEM 8743066) 345/230/13.2KV TRANSFORMER CKT 2
FDNS	06ALL	0	15WP	G15_020	FROM->TO	TUCO INTERCHANGE (GE M1022338) 345/230/13.2KV TRANSFORMER CKT 1	560	560	0.25457	120.4848	TUCO_2 345.00 (TUCO_2 XFMR) 345/230/13.2KV TRANSFORMER CKT 1
FDNS	06ALL	0	15WP	G15_020	FROM->TO	TUCO INTERCHANGE (GE M1022338) 345/230/13.2KV TRANSFORMER CKT 1	560	560	0.25457	118.8811	TUCO_2 345.00 (TUCO_2 XFMR) 345/230/13.2KV TRANSFORMER CKT 1
FDNS	06ALL	0	15SP	G15_020	FROM->TO	TUCO INTERCHANGE (GE M1022338) 345/230/13.2KV TRANSFORMER CKT 1	560	560	0.25156	113.3311	TUCO INTERCHANGE (SIEM 8743066) 345/230/13.2KV TRANSFORMER CKT 2

SOLUTION	GROUP	SCENARIO	SEASON	SOURCE	DIRECTION	MONITORED ELEMENT	RATEA (MVA)	RATEB(MVA)	TDF	TC%LOADING (% MVA)	CONTINGENCY
FDNS	06ALL	0	15WP	G15_020	FROM->TO	TUCO INTERCHANGE (GE M1022338) 345/230/13.2KV TRANSFORMER CKT 1	560	560	0.22366	112.9697	TUCO INTERCHANGE - TUCO_2 230.00 230KV CKT 1
FDNS	06ALL	0	15WP	G15_020	FROM->TO	TUCO INTERCHANGE (GE M1022338) 345/230/13.2KV TRANSFORMER CKT 1	560	560	0.22366	111.3776	TUCO INTERCHANGE - TUCO_2 230.00 230KV CKT 1
FDNS	06ALL	0	15SP	G15_020	FROM->TO	TUCO INTERCHANGE (GE M1022338) 345/230/13.2KV TRANSFORMER CKT 1	560	560	0.25156	111.3719	TUCO INTERCHANGE (SIEM 8743066) 345/230/13.2KV TRANSFORMER CKT 2
FDNS	06ALL	0	15SP	G15_020	FROM->TO	TUCO INTERCHANGE (GE M1022338) 345/230/13.2KV TRANSFORMER CKT 1	560	560	0.24801	110.0342	TUCO_2 345.00 (TUCO_2 XFMR) 345/230/13.2KV TRANSFORMER CKT 1
FDNS	06ALL	0	15SP	G15_020	FROM->TO	TUCO INTERCHANGE (GE M1022338) 345/230/13.2KV TRANSFORMER CKT 1	560	560	0.24801	108.332	TUCO_2 345.00 (TUCO_2 XFMR) 345/230/13.2KV TRANSFORMER CKT 1
FDNS	06ALL	0	15SP	G15_020	FROM->TO	TUCO INTERCHANGE (GE M1022338) 345/230/13.2KV TRANSFORMER CKT 1	560	560	0.21742	107.9073	TUCO INTERCHANGE - TUCO_2 230.00 230KV CKT 1
FDNS	06ALL	0	15SP	G15_020	FROM->TO	TUCO INTERCHANGE (GE M1022338) 345/230/13.2KV TRANSFORMER CKT 1	560	560	0.21742	105.9346	TUCO INTERCHANGE - TUCO_2 230.00 230KV CKT 1
FDNS	06ALL	0	15SP	G15_020	FROM->TO	TUCO_2 345.00 (TUCO_2 XFMR) 345/230/13.2KV TRANSFORMER CKT 1	560	560	0.26538	145.8188	TUCO INTERCHANGE - TUCO_2 345.00 345KV CKT 1
FDNS	06ALL	0	15SP	G15_020	FROM->TO	TUCO_2 345.00 (TUCO_2 XFMR) 345/230/13.2KV TRANSFORMER CKT 1	560	560	0.26538	142.7342	TUCO INTERCHANGE - TUCO_2 345.00 345KV CKT 1
FDNS	06ALL	0	15WP	G15_020	FROM->TO	TUCO_2 345.00 (TUCO_2 XFMR) 345/230/13.2KV TRANSFORMER CKT 1	560	560	0.27226	138.8622	TUCO INTERCHANGE - TUCO_2 345.00 345KV CKT 1
FDNS	06ALL	0	15WP	G15_020	FROM->TO	TUCO_2 345.00 (TUCO_2 XFMR) 345/230/13.2KV TRANSFORMER CKT 1	560	560	0.27226	136.3817	TUCO INTERCHANGE - TUCO_2 345.00 345KV CKT 1
FDNS	06NR	0	15G	G15_020	FROM->TO	TUCO_2 345.00 (TUCO_2 XFMR) 345/230/13.2KV TRANSFORMER CKT 1	560	560	0.03474	133.953	TUCO INTERCHANGE - TUCO_2 345.00 345KV CKT 1
FDNS	06NR	0	15G	G15_020	FROM->TO	TUCO_2 345.00 (TUCO_2 XFMR) 345/230/13.2KV TRANSFORMER CKT 1	560	560	0.03474	132.4001	TUCO INTERCHANGE - TUCO_2 345.00 345KV CKT 1
FDNS	06ALL	0	15WP	G15_020	FROM->TO	TUCO_2 345.00 (TUCO_2 XFMR) 345/230/13.2KV TRANSFORMER CKT 1	560	560	0.23581	109.7547	TUCO INTERCHANGE (GE M1022338) 345/230/13.2KV TRANSFORMER CKT 1
FDNS	06ALL	0	15WP	G15_020	FROM->TO	TUCO_2 345.00 (TUCO_2 XFMR) 345/230/13.2KV TRANSFORMER CKT 1	560	560	0.23581	108.6761	TUCO INTERCHANGE (GE M1022338) 345/230/13.2KV TRANSFORMER CKT 1
FDNS	06ALL	0	15WP	G15_020	FROM->TO	TUCO_2 345.00 (TUCO_2 XFMR) 345/230/13.2KV TRANSFORMER CKT 1	560	560	0.22119	102.7663	TUCO INTERCHANGE (SIEM 8743066) 345/230/13.2KV TRANSFORMER CKT 2
FDNS	06ALL	0	15WP	G15_020	FROM->TO	TUCO_2 345.00 (TUCO_2 XFMR) 345/230/13.2KV TRANSFORMER CKT 1	560	560	0.22119	101.7947	TUCO INTERCHANGE (SIEM 8743066) 345/230/13.2KV TRANSFORMER CKT 2
FDNS	06ALL	0	15SP	G15_020	FROM->TO	TUCO_2 345.00 (TUCO_2 XFMR) 345/230/13.2KV TRANSFORMER CKT 1	560	560	0.22985	99.6	TUCO INTERCHANGE (GE M1022338) 345/230/13.2KV TRANSFORMER CKT 1
FDNS	06NR	2	15G	G15_020	TO->FROM	CARGILL SUB - DEAF SMITH REC-#24 115KV CKT 1	96	96	0.10185	113.1149	DEAF SMITH COUNTY INTERCHANGE - G14-068T 230.00 230KV CKT 1
FDNS	06NR	2	15G	G15_020	TO->FROM	CARGILL SUB - DEAF SMITH REC-#24 115KV CKT 1	96	96	0.10185	107.5918	G14-068T 230.00 - PLANT X STATION 230KV CKT 1
FDNS	06NR	2	15G	G15_020	FROM->TO	CARGILL SUB - FRIONA SUB 115KV CKT 1	96	96	0.10185	106.9074	DEAF SMITH COUNTY INTERCHANGE - G14-068T 230.00 230KV CKT 1
FDNS	06NR	2	15G	G15_020	FROM->TO	CARGILL SUB - FRIONA SUB 115KV CKT 1	96	96	0.10185	101.8144	G14-068T 230.00 - PLANT X STATION 230KV CKT 1
FDNS	00NR	2	25SP	G15_020	TO->FROM	CARLISLE INTERCHANGE - TUCO INTERCHANGE 230KV CKT 1	319	351	0.03386	105.1859	JONES STATION - TUCO INTERCHANGE 230KV CKT 1
FDNS	06NR	2	15G	G15_020	FROM->TO	CURRY COUNTY INTERCHANGE - DEAF SMITH REC-#20 115KV CKT 1	96	96	0.10185	136.0589	DEAF SMITH COUNTY INTERCHANGE - G14-068T 230.00 230KV CKT 1
FDNS	06NR	2	15G	G15_020	FROM->TO	CURRY COUNTY INTERCHANGE - DEAF SMITH REC-#20 115KV CKT 1	96	96	0.10185	130.5691	G14-068T 230.00 - PLANT X STATION 230KV CKT 1
FDNS	06ALL	2	15SP	G15_020	FROM->TO	CURRY COUNTY INTERCHANGE - DEAF SMITH REC-#20 115KV CKT 1	96	96	0.10129	123.9455	BASE CASE
FDNS	06ALL	2	20SP	G15_020	FROM->TO	CURRY COUNTY INTERCHANGE - DEAF SMITH REC-#20 115KV CKT 1	96	96	0.10004	116.2962	BASE CASE
FDNS	06ALL	2	25SP	G15_020	FROM->TO	CURRY COUNTY INTERCHANGE - DEAF SMITH REC-#20 115KV CKT 1	96	96	0.10021	112.3574	BASE CASE
FDNS	06NR	2	15G	G15_020	FROM->TO	CURRY COUNTY INTERCHANGE - DEAF SMITH REC-#20 115KV CKT 1	96	96	0.093	109.8298	G14-074T 345.00 - OKLAUNION 345KV CKT 1
FDNS	06ALL	2	15G	G15_020	FROM->TO	CURRY COUNTY INTERCHANGE - DEAF SMITH REC-#20 115KV CKT 1	96	96	0.10129	107.9018	BASE CASE
FDNS	06NR	2	15G	G15_020	FROM->TO	CURRY COUNTY INTERCHANGE - DEAF SMITH REC-#20 115KV CKT 1	96	96	0.11961	107.8214	G15-010T 230.00 - TOLK STATION EAST 230KV CKT 1
FDNS	06NR	2	15G	G15_020	FROM->TO	CURRY COUNTY INTERCHANGE - DEAF SMITH REC-#20 115KV CKT 1	96	96	0.10542	106.9448	BAILEY COUNTY INTERCHANGE - G15-018T 115.00 115KV CKT 1
FDNS	06NR	2	15G	G15_020	FROM->TO	CURRY COUNTY INTERCHANGE - DEAF SMITH REC-#20 115KV CKT 1	96	96	0.1192	105.734	ROOSEVELT COUNTY INTERCHANGE - TOLK STATION WEST 230KV CKT 2
FDNS	06NR	2	15G	G15_020	FROM->TO	CURRY COUNTY INTERCHANGE - DEAF SMITH REC-#20 115KV CKT 1	96	96	0.10542	105.4678	SPP-SWPS-V12
FDNS	06NR	2	15G	G15_020	FROM->TO	CURRY COUNTY INTERCHANGE - DEAF SMITH REC-#20 115KV CKT 1	96	96	0.09649	105.0826	NEWHART 230 - PLANT X STATION 230KV CKT 1
FDNS	06NR	2	15G	G15_020	FROM->TO	CURRY COUNTY INTERCHANGE - DEAF SMITH REC-#20 115KV CKT 1	96	96	0.093	104.5559	G14-074T 345.00 - TUCO INTERCHANGE 345KV CKT 1
FDNS	06NR	2	15G	G15_020	FROM->TO	CURRY COUNTY INTERCHANGE - DEAF SMITH REC-#20 115KV CKT 1	96	96	0.09233	104.4918	TUCO INTERCHANGE - YOAKUM_345 345.00 345KV CKT 1
FDNS	06NR	2	15G	G15_020	FROM->TO	CURRY COUNTY INTERCHANGE - DEAF SMITH REC-#20 115KV CKT 1	96	96	0.09298	103.3807	BORDER 7345.00 - TUCO_2 345.00 345KV CKT 1
FDNS	06NR	2	15G	G15_020	FROM->TO	CURRY COUNTY INTERCHANGE - DEAF SMITH REC-#20 115KV CKT 1	96	96	0.09298	103.3806	BORDER 7345.00 - TUCO_2 345.00 345KV CKT 2
FDNS	00NR	2	15SP	G15_020	FROM->TO	CURRY COUNTY INTERCHANGE - DEAF SMITH REC-#20 115KV CKT 1	96	96	0.09623	102.589	DEAF SMITH COUNTY INTERCHANGE - G14-068T 230.00 230KV CKT 1
FDNS	06NR	2	15G	G15_020	FROM->TO	CURRY COUNTY INTERCHANGE - DEAF SMITH REC-#20 115KV CKT 1	96	96	0.09562	101.8102	TOLK STATION EAST - TUCO INTERCHANGE 230KV CKT 1
FDNS	06NR	2	15G	G15_020	FROM->TO	CURRY COUNTY INTERCHANGE - DEAF SMITH REC-#20 115KV CKT 1	96	96	0.09739	100.0627	CHAVES COUNTY INTERCHANGE - EDDY_NORTH 6230.00 230KV CKT 1
FDNS	06NR	2	15G	G15_020	FROM->TO	CURRY COUNTY INTERCHANGE - DEAF SMITH REC-#20 115KV CKT 1	96	96	0.09459	99.6	NEWHART 230 - POTTER COUNTY INTERCHANGE 230KV CKT 1
FDNS	06NR	2	15G	G15_020	TO->FROM	DAWN SUB - Panda Energy Substation Hereford 115KV CKT 1	96	96	0.05851	100.6686	BUSHLAND INTERCHANGE - DEAF SMITH COUNTY INTERCHANGE 230KV CKT 1
FDNS	06NR	2	15G	G15_020	FROM->TO	DEAF SMITH COUNTY INTERCHANGE - Panda Energy Substation Hereford 115KV CKT 1	96	96	0.05851	105.2217	BUSHLAND INTERCHANGE - DEAF SMITH COUNTY INTERCHANGE 230KV CKT 1
FDNS	06NR	2	15G	G15_020	FROM->TO	DEAF SMITH REC-#20 - PARMER COUNTY SUB 115KV CKT 1	96	96	0.10185	127.3186	DEAF SMITH COUNTY INTERCHANGE - G14-068T 230.00 230KV CKT 1
FDNS	06NR	2	15G	G15_020	FROM->TO	DEAF SMITH REC-#20 - PARMER COUNTY SUB 115KV CKT 1	96	96	0.10185	122.0338	G14-068T 230.00 - PLANT X STATION 230KV CKT 1
FDNS	06ALL	2	15SP	G15_020	FROM->TO	DEAF SMITH REC-#20 - PARMER COUNTY SUB 115KV CKT 1	96	96	0.10129	111.0308	BASE CASE
FDNS	06NR	2	15G	G15_020	FROM->TO	DEAF SMITH REC-#20 - PARMER COUNTY SUB 115KV CKT 1	96	96	0.093	101.2887	G14-074T 345.00 - OKLAUNION 345KV CKT 1
FDNS	06ALL	2	20SP	G15_020	FROM->TO	DEAF SMITH REC-#20 - PARMER COUNTY SUB 115KV CKT 1	96	96	0.10004	100.9761	BASE CASE
FDNS	06NR	2	15G	G15_020	TO->FROM	DEAF SMITH REC-#24 - PARMER COUNTY SUB 115KV CKT 1	96	96	0.10185	121.0419	DEAF SMITH COUNTY INTERCHANGE - G14-068T 230.00 230KV CKT 1
FDNS	06NR	2	15G	G15_020	TO->FROM	DEAF SMITH REC-#24 - PARMER COUNTY SUB 115KV CKT 1	96	96	0.10185	115.3182	G14-068T 230.00 - PLANT X STATION 230KV CKT 1
FDNS	06ALL	2	15SP	G15_020	TO->FROM	DEAF SMITH REC-#24 - PARMER COUNTY SUB 115KV CKT 1	96	96	0.10129	102.83	BASE CASE
FDNS	06ALL	2	15SP	G15_020	FROM->TO	ELK CITY 230KV (ELKCTY-6) 230/138/13.8KV TRANSFORMER CKT 1	272	316	0.06348	125.7818	BASE CASE
FDNS	06ALL	2	15SP	G15_020	FROM->TO	ELK CITY 230KV (ELKCTY-6) 230/138/13.8KV TRANSFORMER CKT 1	272	316	0.06348	124.4125	BASE CASE
FDNS	06ALL	2	15G	G15_020	FROM->TO	ELK CITY 230KV (ELKCTY-6) 230/138/13.8KV TRANSFORMER CKT 1	287	316	0.05885	111.2694	BASE CASE
FDNS	06ALL	2	15G	G15_020	FROM->TO	ELK CITY 230KV (ELKCTY-6) 230/138/13.8KV TRANSFORMER CKT 1	287	316	0.05885	110.3238	BASE CASE
FDNS	06ALL	2	15WP	G15_020	FROM->TO	ELK CITY 230KV (ELKCTY-6) 230/138/13.8KV TRANSFORMER CKT 1	287	316	0.06525	107.6385	BASE CASE
FDNS	06ALL	2	15WP	G15_020	FROM->TO	ELK CITY 230KV (ELKCTY-6) 230/138/13.8KV TRANSFORMER CKT 1	287	316	0.06525	106.6339	BASE CASE
FDNS	06ALL	2	20SP	G15_020	FROM->TO	ELK CITY 230KV (ELKCTY-6) 230/138/13.8KV TRANSFORMER CKT 1	272	316	0.06359	103.949	BASE CASE
FDNS	06ALL	2	20SP	G15_020	FROM->TO	ELK CITY 230KV (ELKCTY-6) 230/138/13.8KV TRANSFORMER CKT 1	272	316	0.06359	103.7414	BASE CASE
FDNS	06ALL	2	20WP	G15_020	FROM->TO	ELK CITY 230KV (ELKCTY-6) 230/138/13.8KV TRANSFORMER CKT 1	287	316	0.06284	101.967	BASE CASE
FDNS	06ALL	2	20WP	G15_020	FROM->TO	ELK CITY 230KV (ELKCTY-6) 230/138/13.8KV TRANSFORMER CKT 1	287	316	0.06284	101.2457	BASE CASE
FDNS	06ALL	2	15SP	G15_020	TO->FROM	NEWHART 230 - PLANT X STATION 230KV CKT 1	478	502	0.20191	105.0168	DEAF SMITH COUNTY INTERCHANGE - G14-068T 230.00 230KV CKT 1
FDNS	06ALL	2	15SP	G15_020	TO->FROM	NEWHART 230 - PLANT X STATION 230KV CKT 1	478	502	0.20191	105.011	G14-068T 230.00 - PLANT X STATION 230KV CKT 1
FDNS	06NR	2	15G	G15_020	TO->FROM	PLANT X STATION - TOLK STATION EAST 230KV CKT 2	478	502	0.09445	123.8164	SPP-SWPS-06
FDNS	06NR	2	15G	G15_020	TO->FROM	PLANT X STATION - TOLK STATION EAST 230KV CKT 2	478	502	0.07466	112.0288	TOLK STATION TAP - TOLK STATION WEST 230KV CKT @1
FDNS	06NR	2	15G	G15_020	FROM->TO	TOLK STATION TAP - TOLK STATION WEST 230KV CKT @1	478	610	0.06116	109.214	PLANT X STATION - TOLK STATION EAST 230KV CKT 2
FDNS	06NR	2	15G	G15_020	FROM->TO	TOLK STATION TAP - TOLK STATION WEST 230KV CKT @1	478	610	0.06011	103.3226	TOLK STATION EAST - TUCO INTERCHANGE 230KV CKT 1
FDNS	06ALL	2	15G	G15_020	FROM->TO	TUCO INTERCHANGE - TUCO_2 230.00 230KV CKT 1	478	502	0.23306	200.4231	TUCO INTERCHANGE - TUCO_2 345.00 345KV CKT 1
FDNS	06ALL	2	15SP	G15_020	FROM->TO	TUCO INTERCHANGE - TUCO_2 230.00 230KV CKT 1	478	502	0.23962	183.8625	TUCO INTERCHANGE - TUCO_2 345.00 345KV CKT 1
FDNS	06ALL	2	15WP	G15_020	FROM->TO	TUCO INTERCHANGE - TUCO_2 230.00 230KV CKT 1	557	557	0.24669	142.2485	TUCO INTERCHANGE - TUCO_2 345.00 345KV CKT 1
FDNS	06ALL	2	20SP	G15_020	FROM->TO	TUCO INTERCHANGE - TUCO_2 230.00 230KV CKT 1	478	502	0.244	137.8459	TUCO INTERCHANGE - TUCO_2 345.00 345KV CKT 1
FDNS	06ALL	2	15G	G15_020	FROM->TO	TUCO_2 345.00 (TUCO_2 XFMR) 345/230/13.2KV TRANSFORMER CKT 1	560	560	0.26467	167.6169	TUCO INTERCHANGE - TUCO_2 345.00 345KV CKT 1
FDNS	06ALL	2	15G	G15_020	FROM->TO	TUCO_2 345.00 (TUCO_2 XFMR) 345/230/13.2KV TRANSFORMER CKT 1	560	560	0.26467	164.2629	TUCO INTERCHANGE - TUCO_2 345.00 345KV CKT 1

SOLUTION	GROUP	SCENARIO	SEASON	SOURCE	DIRECTION	MONITORED ELEMENT	RATEA (MVA)	RATEB(MVA)	TDF	TC%LOADING (% MVA)	CONTINGENCY
FDNS	06ALL	2	15SP	G15_020	FROM->TO	TUCO_2 345.00 (TUCO_2 XFMR) 345/230/13.2KV TRANSFORMER CKT 1	560	560	0.27152	149.8147	TUCO INTERCHANGE - TUCO_2 345.00 345KV CKT 1
FDNS	06ALL	2	15SP	G15_020	FROM->TO	TUCO_2 345.00 (TUCO_2 XFMR) 345/230/13.2KV TRANSFORMER CKT 1	560	560	0.27152	147.216	TUCO INTERCHANGE - TUCO_2 345.00 345KV CKT 1
FDNS	06ALL	2	15WP	G15_020	FROM->TO	TUCO_2 345.00 (TUCO_2 XFMR) 345/230/13.2KV TRANSFORMER CKT 1	560	560	0.27821	141.8557	TUCO INTERCHANGE - TUCO_2 345.00 345KV CKT 1
FDNS	06ALL	2	15WP	G15_020	FROM->TO	TUCO_2 345.00 (TUCO_2 XFMR) 345/230/13.2KV TRANSFORMER CKT 1	560	560	0.27821	139.9334	TUCO INTERCHANGE - TUCO_2 345.00 345KV CKT 1
FDNS	06NR	2	15G	G15_020	FROM->TO	TUCO_2 345.00 (TUCO_2 XFMR) 345/230/13.2KV TRANSFORMER CKT 1	560	560	0.03391	137.5112	TUCO INTERCHANGE - TUCO_2 345.00 345KV CKT 1
FDNS	06NR	2	15G	G15_020	FROM->TO	TUCO_2 345.00 (TUCO_2 XFMR) 345/230/13.2KV TRANSFORMER CKT 1	560	560	0.03391	135.6134	TUCO INTERCHANGE - TUCO_2 345.00 345KV CKT 1
FDNS	06ALL	2	20SP	G15_020	FROM->TO	TUCO_2 345.00 (TUCO_2 XFMR) 345/230/13.2KV TRANSFORMER CKT 1	560	560	0.27267	112.3827	TUCO INTERCHANGE - TUCO_2 345.00 345KV CKT 1
FDNS	06ALL	2	20SP	G15_020	FROM->TO	TUCO_2 345.00 (TUCO_2 XFMR) 345/230/13.2KV TRANSFORMER CKT 1	560	560	0.27267	112.1069	TUCO INTERCHANGE - TUCO_2 345.00 345KV CKT 1
FDNS	00NR	3	25SP	G15_020	TO->FROM	CARLISLE INTERCHANGE - TUCO INTERCHANGE 230KV CKT 1	319	351	0.04328	102.9279	JONES STATION - TUCO INTERCHANGE 230KV CKT 1
FDNS	06ALL	3	15SP	G15_020	FROM->TO	ELK CITY 230KV (ELKCTY-6) 230/138/13.8KV TRANSFORMER CKT 1	272	316	0.06102	123.9727	BASE CASE
FDNS	06ALL	3	15SP	G15_020	FROM->TO	ELK CITY 230KV (ELKCTY-6) 230/138/13.8KV TRANSFORMER CKT 1	272	316	0.06102	122.7526	BASE CASE
FDNS	06ALL	3	15G	G15_020	FROM->TO	ELK CITY 230KV (ELKCTY-6) 230/138/13.8KV TRANSFORMER CKT 1	287	316	0.0564	109.3338	BASE CASE
FDNS	06ALL	3	15G	G15_020	FROM->TO	ELK CITY 230KV (ELKCTY-6) 230/138/13.8KV TRANSFORMER CKT 1	287	316	0.0564	108.4212	BASE CASE
FDNS	06ALL	3	15WP	G15_020	FROM->TO	ELK CITY 230KV (ELKCTY-6) 230/138/13.8KV TRANSFORMER CKT 1	287	316	0.06278	106.1239	BASE CASE
FDNS	06ALL	3	15WP	G15_020	FROM->TO	ELK CITY 230KV (ELKCTY-6) 230/138/13.8KV TRANSFORMER CKT 1	287	316	0.06278	105.1628	BASE CASE
FDNS	06ALL	3	20SP	G15_020	FROM->TO	ELK CITY 230KV (ELKCTY-6) 230/138/13.8KV TRANSFORMER CKT 1	272	316	0.06103	102.7547	BASE CASE
FDNS	06ALL	3	20SP	G15_020	FROM->TO	ELK CITY 230KV (ELKCTY-6) 230/138/13.8KV TRANSFORMER CKT 1	272	316	0.06103	102.5743	BASE CASE
FDNS	06ALL	3	20WP	G15_020	FROM->TO	ELK CITY 230KV (ELKCTY-6) 230/138/13.8KV TRANSFORMER CKT 1	287	316	0.06033	100.8598	BASE CASE
FDNS	06ALL	3	20WP	G15_020	FROM->TO	ELK CITY 230KV (ELKCTY-6) 230/138/13.8KV TRANSFORMER CKT 1	287	316	0.06033	100.2492	BASE CASE
FDNS	06ALL	3	15G	G15_020	TO->FROM	GRAPEVINE INTERCHANGE - NICHOLS STATION 230KV CKT 1	319	351	0.06618	100.925	BASE CASE
FDNS	06NR	3	15G	G15_020	TO->FROM	PLANT X STATION - TOLK STATION EAST 230KV CKT 2	478	502	0.05021	106.6575	SPP-SWPS-06
FDNS	06ALL	3	15G	G15_020	FROM->TO	TUCO_2 345.00 (TUCO_2 XFMR) 345/230/13.2KV TRANSFORMER CKT 1	560	560	0.21834	151.8506	TUCO INTERCHANGE - TUCO_2 345.00 345KV CKT 1
FDNS	06ALL	3	15G	G15_020	FROM->TO	TUCO_2 345.00 (TUCO_2 XFMR) 345/230/13.2KV TRANSFORMER CKT 1	560	560	0.21834	149.0893	TUCO INTERCHANGE - TUCO_2 345.00 345KV CKT 1
FDNS	06ALL	3	15SP	G15_020	FROM->TO	TUCO_2 345.00 (TUCO_2 XFMR) 345/230/13.2KV TRANSFORMER CKT 1	560	560	0.22436	133.4173	TUCO INTERCHANGE - TUCO_2 345.00 345KV CKT 1
FDNS	06ALL	3	15SP	G15_020	FROM->TO	TUCO_2 345.00 (TUCO_2 XFMR) 345/230/13.2KV TRANSFORMER CKT 1	560	560	0.22436	131.8248	TUCO INTERCHANGE - TUCO_2 345.00 345KV CKT 1
FDNS	06ALL	3	15WP	G15_020	FROM->TO	TUCO_2 345.00 (TUCO_2 XFMR) 345/230/13.2KV TRANSFORMER CKT 1	560	560	0.23055	127.9846	TUCO INTERCHANGE - TUCO_2 345.00 345KV CKT 1
FDNS	06ALL	3	15WP	G15_020	FROM->TO	TUCO_2 345.00 (TUCO_2 XFMR) 345/230/13.2KV TRANSFORMER CKT 1	560	560	0.23055	126.6738	TUCO INTERCHANGE - TUCO_2 345.00 345KV CKT 1
FDNS	06ALL	3	20WP	G15_020	FROM->TO	TUCO_2 345.00 (TUCO_2 XFMR) 345/230/13.2KV TRANSFORMER CKT 1	560	560	0.22262	121.9391	TUCO INTERCHANGE - TUCO_2 345.00 345KV CKT 1
FDNS	06ALL	3	20WP	G15_020	FROM->TO	TUCO_2 345.00 (TUCO_2 XFMR) 345/230/13.2KV TRANSFORMER CKT 1	560	560	0.22262	121.0095	TUCO INTERCHANGE - TUCO_2 345.00 345KV CKT 1
FDNS	06ALL	3	20SP	G15_020	FROM->TO	TUCO_2 345.00 (TUCO_2 XFMR) 345/230/13.2KV TRANSFORMER CKT 1	560	560	0.22536	100.2304	TUCO INTERCHANGE - TUCO_2 345.00 345KV CKT 1
FDNS	06ALL	3	20SP	G15_020	FROM->TO	TUCO_2 345.00 (TUCO_2 XFMR) 345/230/13.2KV TRANSFORMER CKT 1	560	560	0.22536	100.1212	TUCO INTERCHANGE - TUCO_2 345.00 345KV CKT 1
FDNS	00NR	4	25SP	G15_020	TO->FROM	CARLISLE INTERCHANGE - TUCO INTERCHANGE 230KV CKT 1	319	351	0.04422	103.1286	JONES STATION - TUCO INTERCHANGE 230KV CKT 1
FDNS	06ALL	4	15SP	G15_020	FROM->TO	CHISHOLM6 230.00 - ELK CITY 230KV 230KV CKT 1	353	353	0.06723	100.9254	BASE CASE
FDNS	06ALL	4	15SP	G15_020	FROM->TO	ELK CITY 230KV (ELKCTY-6) 230/138/13.8KV TRANSFORMER CKT 1	272	316	0.06723	129.8441	BASE CASE
FDNS	06ALL	4	15SP	G15_020	FROM->TO	ELK CITY 230KV (ELKCTY-6) 230/138/13.8KV TRANSFORMER CKT 1	272	316	0.06723	128.5805	BASE CASE
FDNS	06ALL	4	15G	G15_020	FROM->TO	ELK CITY 230KV (ELKCTY-6) 230/138/13.8KV TRANSFORMER CKT 1	287	316	0.06281	116.3182	BASE CASE
FDNS	06ALL	4	15G	G15_020	FROM->TO	ELK CITY 230KV (ELKCTY-6) 230/138/13.8KV TRANSFORMER CKT 1	287	316	0.06281	115.4161	BASE CASE
FDNS	06ALL	4	15WP	G15_020	FROM->TO	ELK CITY 230KV (ELKCTY-6) 230/138/13.8KV TRANSFORMER CKT 1	287	316	0.06914	112.0283	BASE CASE
FDNS	06ALL	4	15WP	G15_020	FROM->TO	ELK CITY 230KV (ELKCTY-6) 230/138/13.8KV TRANSFORMER CKT 1	287	316	0.06914	111.0401	BASE CASE
FDNS	06ALL	4	20SP	G15_020	FROM->TO	ELK CITY 230KV (ELKCTY-6) 230/138/13.8KV TRANSFORMER CKT 1	272	316	0.0672	107.1637	BASE CASE
FDNS	06ALL	4	20SP	G15_020	FROM->TO	ELK CITY 230KV (ELKCTY-6) 230/138/13.8KV TRANSFORMER CKT 1	272	316	0.0672	106.9127	BASE CASE
FDNS	06ALL	4	20WP	G15_020	FROM->TO	ELK CITY 230KV (ELKCTY-6) 230/138/13.8KV TRANSFORMER CKT 1	287	316	0.0665	106.7868	BASE CASE
FDNS	06ALL	4	20WP	G15_020	FROM->TO	ELK CITY 230KV (ELKCTY-6) 230/138/13.8KV TRANSFORMER CKT 1	287	316	0.0665	106.1189	BASE CASE
FDNS	06NR	4	15G	G15_020	TO->FROM	PLANT X STATION - TOLK STATION EAST 230KV CKT 2	478	502	0.0511	105.5063	SPP-SWPS-06
FDNS	06ALL	4	15G	G15_020	FROM->TO	POTTER COUNTY INTERCHANGE (WAUK 90343-A) 345/230/13.2KV TRANSFORMER CKT 1	560	560	0.20234	111.314	PLSNT_HILL7 345.00 - POTTER COUNTY INTERCHANGE 345KV CKT 1
FDNS	06ALL	4	15G	G15_020	FROM->TO	POTTER COUNTY INTERCHANGE (WAUK 90343-A) 345/230/13.2KV TRANSFORMER CKT 1	560	560	0.20234	111.0141	PLSNT_HILL7 345.00 - POTTER COUNTY INTERCHANGE 345KV CKT 1
FDNS	00NR	5	25SP	G15_020	TO->FROM	CARLISLE INTERCHANGE - TUCO INTERCHANGE 230KV CKT 1	319	351	0.04439	103.4722	JONES STATION - TUCO INTERCHANGE 230KV CKT 1
FDNS	06ALL	5	15SP	G15_020	FROM->TO	CHISHOLM6 230.00 - ELK CITY 230KV 230KV CKT 1	353	353	0.06729	100.9761	BASE CASE
FDNS	06ALL	5	15SP	G15_020	FROM->TO	ELK CITY 230KV (ELKCTY-6) 230/138/13.8KV TRANSFORMER CKT 1	272	316	0.06729	129.9064	BASE CASE
FDNS	06ALL	5	15SP	G15_020	FROM->TO	ELK CITY 230KV (ELKCTY-6) 230/138/13.8KV TRANSFORMER CKT 1	272	316	0.06729	128.6412	BASE CASE
FDNS	06ALL	5	15G	G15_020	FROM->TO	ELK CITY 230KV (ELKCTY-6) 230/138/13.8KV TRANSFORMER CKT 1	287	316	0.06288	116.3419	BASE CASE
FDNS	06ALL	5	15G	G15_020	FROM->TO	ELK CITY 230KV (ELKCTY-6) 230/138/13.8KV TRANSFORMER CKT 1	287	316	0.06288	115.4406	BASE CASE
FDNS	06ALL	5	15WP	G15_020	FROM->TO	ELK CITY 230KV (ELKCTY-6) 230/138/13.8KV TRANSFORMER CKT 1	287	316	0.06921	112.0665	BASE CASE
FDNS	06ALL	5	15WP	G15_020	FROM->TO	ELK CITY 230KV (ELKCTY-6) 230/138/13.8KV TRANSFORMER CKT 1	287	316	0.06921	111.0777	BASE CASE
FDNS	06ALL	5	20SP	G15_020	FROM->TO	ELK CITY 230KV (ELKCTY-6) 230/138/13.8KV TRANSFORMER CKT 1	272	316	0.06726	107.1735	BASE CASE
FDNS	06ALL	5	20SP	G15_020	FROM->TO	ELK CITY 230KV (ELKCTY-6) 230/138/13.8KV TRANSFORMER CKT 1	272	316	0.06726	106.9225	BASE CASE
FDNS	06ALL	5	20WP	G15_020	FROM->TO	ELK CITY 230KV (ELKCTY-6) 230/138/13.8KV TRANSFORMER CKT 1	287	316	0.06655	106.7889	BASE CASE
FDNS	06ALL	5	20WP	G15_020	FROM->TO	ELK CITY 230KV (ELKCTY-6) 230/138/13.8KV TRANSFORMER CKT 1	287	316	0.06655	106.1215	BASE CASE
FDNS	06NR	5	15G	G15_020	TO->FROM	PLANT X STATION - TOLK STATION EAST 230KV CKT 2	478	502	0.05126	105.3914	SPP-SWPS-06
FDNS	06ALL	5	15G	G15_020	FROM->TO	POTTER COUNTY INTERCHANGE (WAUK 90343-A) 345/230/13.2KV TRANSFORMER CKT 1	560	560	0.20227	111.2115	PLSNT_HILL7 345.00 - POTTER COUNTY INTERCHANGE 345KV CKT 1
FDNS	06ALL	5	15G	G15_020	FROM->TO	POTTER COUNTY INTERCHANGE (WAUK 90343-A) 345/230/13.2KV TRANSFORMER CKT 1	560	560	0.20227	110.9126	PLSNT_HILL7 345.00 - POTTER COUNTY INTERCHANGE 345KV CKT 1
FDNS	00NR	6	25SP	G15_020	TO->FROM	CARLISLE INTERCHANGE - TUCO INTERCHANGE 230KV CKT 1	319	351	0.04427	103.4261	JONES STATION - TUCO INTERCHANGE 230KV CKT 1
FDNS	06NR	6	15G	G15_020	TO->FROM	PLANT X STATION - TOLK STATION EAST 230KV CKT 2	478	502	0.04868	106.1062	SPP-SWPS-06
FDNS	06NR	7	15G	G15_020	TO->FROM	PLANT X STATION - TOLK STATION EAST 230KV CKT 2	478	502	0.04867	106.0159	SPP-SWPS-06
FDNS	03ALL	0	15G	G15_021	FROM->TO	FPL SWITCH - MOORELAND 138KV CKT 1	287	287	0.03626	100.2134	BASE CASE
FDNS	03ALL	2	25SP	G15_021	TO->FROM	HUGOTON SUBSTATION - PIONEER NATURAL RESOURCES TAP 115KV CKT 1	159.3	159.3	0.25672	99.8000	FINNEY SWITCHING STATION - WALKTAP7 345.00 345KV CKT 1
FDNSLock-Blown up	06ALL	0	15G	G15_022		Non-Converged Contingency	0	0	0.34791	-	SPSCONT-02X
FDNSLock-Blown up	06ALL	0	15G	G15_022		Non-Converged Contingency	0	0	0.19954	-	SPSCONT-05AX
FDNSLock-Blown up	06ALL	0	15G	G15_022		Non-Converged Contingency	956	994	0.17421	-	G14-074T 345.00 - OKLAUNION 345KV CKT 1
FDNSLock-Blown up	06ALL	0	15G	G15_022		Non-Converged Contingency	956	994	0.17421	-	G14-074T 345.00 - TUCO INTERCHANGE 345KV CKT 1
FDNSLock-Blown up	06ALL	0	15G	G15_022		Non-Converged Contingency	956	994	0.17421	-	OKLAUNION 345KV SWITCHED SHUNT
FDNSLock-Blown up	06ALL	0	15G	G15_022		Non-Converged Contingency	956	1052	0.17396	-	G14_038T 345.00 - Hitchland Interchange 345KV CKT 1
FDNSLock-Blown up	06ALL	0	15G	G15_022		Non-Converged Contingency	956	1052	0.17396	-	G14_038T 345.00 - POTTER COUNTY INTERCHANGE 345KV CKT 1
FDNSLock-Blown up	06ALL	0	15G	G15_022		Non-Converged Contingency	560	560	0.17396	-	POTTER COUNTY INTERCHANGE (WAUK 90343-A) 345/230/13.2KV TRANSFORMER CKT 1
FDNSLock-Blown up	06ALL	0	15G	G15_022		Non-Converged Contingency	1195	1195	0.16336	-	GRACEMONT - MINCO 345KV CKT 1

SOLUTION	GROUP	SCENARIO	SEASON	SOURCE	DIRECTION	MONITORED ELEMENT	RATEA (MVA)	RATEB(MVA)	TDF	TC%LOADING (% MVA)	CONTINGENCY
FDNSLock-Blown up	06ALL	0	15G	G15_022		Non-Converged Contingency	560	560	0.16326	-	TUCO_2 345.00 (TUCO_2 XFMR) 345/230/13.2KV TRANSFORMER CKT 1
FDNSLock-Blown up	06ALL	0	15G	G15_022		Non-Converged Contingency	0	0	0.15933	-	SPP-SWPS-02
FDNSLock-Blown up	06ALL	0	15G	G15_022		Non-Converged Contingency	1330	1940	0.1513	-	CHISHOLM7 345.00 - GRACEMONT 345KV CKT 1
FDNSLock-Blown up	06ALL	0	15G	G15_022		Non-Converged Contingency	0	0	0.14919	-	SPP-SWPS-03
FDNSLock-Blown up	06ALL	0	15G	G15_022		Non-Converged Contingency	560	560	0.14628	-	TUCO INTERCHANGE (GE M1022338) 345/230/13.2KV TRANSFORMER CKT 1
FDNSLock-Blown up	06ALL	0	15G	G15_022		Non-Converged Contingency	319	351	0.13988	-	AMARILLO SOUTH INTERCHANGE - SWISHER COUNTY INTERCHANGE 230KV CKT 1
FDNSLock-Blown up	06ALL	0	15G	G15_022		Non-Converged Contingency	1792	1792	0.13267	-	CHISHOLM7 345.00 - WOODWARD DISTRICT EHV 345KV CKT 1
FDNSLock-Blown up	06ALL	0	15G	G15_022		Non-Converged Contingency	956	1052	0.13148	-	FINNEY SWITCHING STATION - Hitchland Interchange 345KV CKT 1
FDNSLock-Blown up	06ALL	0	15G	G15_022		Non-Converged Contingency	956	1052	0.13148	-	FINNEY SWITCHING STATION - HOLCOMB 345KV CKT 1
FDNSLock-Blown up	06ALL	0	15G	G15_022		Non-Converged Contingency	0	0	0.13148	-	SPP-SWPS-05
FDNSLock-Blown up	06ALL	0	15G	G15_022		Non-Converged Contingency	1792	1792	0.1314	-	BORDER 7345.00 - CHISHOLM7 345.00 345KV CKT 1
FDNSLock-Blown up	06ALL	0	15G	G15_022		Non-Converged Contingency	1792	1792	0.1314	-	BORDER 7345.00 - CHISHOLM7 345.00 345KV CKT 2
FDNSLock-Blown up	06ALL	0	15G	G15_022		Non-Converged Contingency	1420	1775	0.1314	-	BORDER 7345.00 - TUCO_2 345.00 345KV CKT 1
FDNSLock-Blown up	06ALL	0	15G	G15_022		Non-Converged Contingency	1420	1775	0.1314	-	BORDER 7345.00 - TUCO_2 345.00 345KV CKT 2
FDNSLock-Blown up	06ALL	0	15G	G15_022		Non-Converged Contingency	560	644	0.12748	-	TUCO INTERCHANGE (SIEM 8743066) 345/230/13.2KV TRANSFORMER CKT 2
FDNSLock-Blown up	06ALL	0	15G	G15_022		Non-Converged Contingency	478	502	0.12498	-	NEWHART 230 - POTTER COUNTY INTERCHANGE 230KV CKT 1
FDNSLock-Blown up	06ALL	0	15G	G15_022		Non-Converged Contingency	1420	1775	0.09977	-	G11_051T 345.00 - TATONGA7 345.00 345KV CKT 1
FDNSLock-Blown up	06ALL	0	15G	G15_022		Non-Converged Contingency	1420	1775	0.09977	-	G11_051T 345.00 - WOODWARD DISTRICT EHV 345KV CKT 1
FDNSLock-Blown up	06ALL	0	15G	G15_022		Non-Converged Contingency	1195	1195	0.09977	-	NORTHWEST - TATONGA7 345.00 345KV CKT 1
FDNSLock-Blown up	06ALL	0	15G	G15_022		Non-Converged Contingency	0	0	0.09977	-	SPSCONT-04
FDNSLock-Blown up	06ALL	0	15G	G15_022		Non-Converged Contingency	0	0	0.09977	-	SPSCONT-05B
FDNSLock-Blown up	06ALL	0	15G	G15_022		Non-Converged Contingency	1420	1775	0.09954	-	TUCO INTERCHANGE - TUCO_2 345.00 345KV CKT 1
FDNSLock-Blown up	06ALL	0	15G	G15_022		Non-Converged Contingency	1420	1775	0.09077	-	G11-14T 345.00 - WOODWARD DISTRICT EHV 345KV CKT 1
FDNSLock-Blown up	06ALL	0	15G	G15_022		Non-Converged Contingency	1420	1775	0.09077	-	G11-14T 345.00 - WOODWARD DISTRICT EHV 345KV CKT 2
FDNSLock-Blown up	06ALL	0	15G	G15_022		Non-Converged Contingency	439	439	0.07967	-	CHISHOLM6 230.00 - SWEETWATER 230KV CKT 1
FDNSLock-Blown up	06ALL	0	15G	G15_022		Non-Converged Contingency	319	351	0.07967	-	GRAPEVINE INTERCHANGE - STATELINE INTERCHANGE 230KV CKT 1
FDNSLock-Blown up	06ALL	0	15G	G15_022		Non-Converged Contingency	349	395	0.07967	-	STATELINE INTERCHANGE - STLN-DEMARC6 230KV CKT 1
FDNSLock-Blown up	06ALL	0	15G	G15_022		Non-Converged Contingency	396	441	0.07967	-	STLN-DEMARC6 - SWEETWATER 230KV CKT 1
FDNSLock-Blown up	06ALL	0	15G	G15_022		Non-Converged Contingency	478	502	0.07382	-	HITCHLAND INTERCHANGE - MOORE COUNTY INTERCHANGE 230KV CKT 1
FDNSLock-Blown up	06ALL	0	15G	G15_022		Non-Converged Contingency	478	502	0.07382	-	HITCHLAND INTERCHANGE - MOORE COUNTY INTERCHANGE 230KV CKT 1
FDNSLock-Blown up	06ALL	0	15G	G15_022		Non-Converged Contingency	319	351	0.06989	-	BUSHLAND INTERCHANGE - POTTER COUNTY INTERCHANGE 230KV CKT 1
FDNSLock-Blown up	06ALL	0	15G	G15_022		Non-Converged Contingency	319	351	0.06953	-	GRAPEVINE INTERCHANGE - NICHOLS STATION 230KV CKT 1
FDNSLock-Blown up	06ALL	0	15G	G15_022		Non-Converged Contingency	319	351	0.06751	-	BUSHLAND INTERCHANGE - DEAF SMITH COUNTY INTERCHANGE 230KV CKT 1
FDNSLock-Blown up	06ALL	0	15G	G15_022		Non-Converged Contingency	319	351	0.06751	-	BUSHLAND INTERCHANGE 230KV SWITCHED SHUNT
FDNSLock-Blown up	06ALL	0	15G	G15_022		Non-Converged Contingency	1413	1517	0.0626	-	BUCKNER7 345.00 - SPEARVILLE 345KV CKT 1
FDNSLock-Blown up	06ALL	0	15G	G15_022		Non-Converged Contingency	319	351	0.06251	-	MOORE COUNTY INTERCHANGE - POTTER COUNTY INTERCHANGE 230KV CKT 1
FDNSLock-Blown up	06ALL	0	15G	G15_022		Non-Converged Contingency	319	351	0.06251	-	MOORE COUNTY INTERCHANGE - POTTER COUNTY INTERCHANGE 230KV CKT 1
FDNSLock-Blown up	06ALL	0	15G	G15_022		Non-Converged Contingency	439	439	0.0585	-	CHISHOLM6 230.00 - ELK CITY 230KV 230KV CKT 1
FDNSLock-Blown up	06ALL	0	15G	G15_022		Non-Converged Contingency	287	316	0.0585	-	ELK CITY 230KV (ELKCTY-6) 230/138/13.8KV TRANSFORMER CKT 1
FDNSLock-Blown up	06ALL	0	15G	G15_022		Non-Converged Contingency	478	502	0.04965	-	TOLK STATION EAST - TUCO INTERCHANGE 230KV CKT 1
FDNSLock-Blown up	06ALL	0	15G	G15_022		Non-Converged Contingency	478	478	0.03042	-	DEAF SMITH COUNTY INTERCHANGE - G14-068T 230.00 230KV CKT 1
FDNSLock-Blown up	06ALL	0	15G	G15_022		Non-Converged Contingency	478	478	0.03042	-	G14-068T 230.00 - PLANT X STATION 230KV CKT 1
FDNSLock-Blown up	06ALL	0	15SP	G15_022		Non-Converged Contingency	0	0	0.36066	-	SPSCONT-02X
FDNSLock-Blown up	06ALL	0	15SP	G15_022		Non-Converged Contingency	956	1052	0.18033	-	G14_038T 345.00 - Hitchland Interchange 345KV CKT 1
FDNSLock-Blown up	06ALL	0	15SP	G15_022		Non-Converged Contingency	956	994	0.18016	-	G14-074T 345.00 - OKLAUNION 345KV CKT 1
FDNSLock-Blown up	06ALL	0	15SP	G15_022		Non-Converged Contingency	956	994	0.18016	-	G14-074T 345.00 - TUCO INTERCHANGE 345KV CKT 1
FDNSLock-Blown up	06ALL	0	15SP	G15_022		Non-Converged Contingency	1420	1775	0.13502	-	BORDER 7345.00 - TUCO_2 345.00 345KV CKT 1
FDNSLock-Blown up	06ALL	0	15SP	G15_022		Non-Converged Contingency	1420	1775	0.13502	-	BORDER 7345.00 - TUCO_2 345.00 345KV CKT 2
FDNSLock-Blown up	06ALL	0	15SP	G15_022		Non-Converged Contingency	478	478	0.03243	-	G14-068T 230.00 - PLANT X STATION 230KV CKT 1
FDNSLock-Blown up	06ALL	0	15WP	G15_022		Non-Converged Contingency	1033	1071	0.18527	-	G14-074T 345.00 - OKLAUNION 345KV CKT 1
FDNSLock-Blown up	06ALL	0	20SP	G15_022		Non-Converged Contingency	956	994	0.2294	-	G14-074T 345.00 - OKLAUNION 345KV CKT 1
FDNSLock-Blown up	06ALL	0	20WP	G15_022		Non-Converged Contingency	0	0	0.36944	-	SPSCONT-02X
FDNSLock-Blown up	06ALL	0	20WP	G15_022		Non-Converged Contingency	1033	1071	0.22639	-	G14-074T 345.00 - OKLAUNION 345KV CKT 1
FDNSLock-Blown up	06ALL	0	20WP	G15_022		Non-Converged Contingency	1033	1071	0.22639	-	G14-074T 345.00 - TUCO INTERCHANGE 345KV CKT 1
FDNSLock-Blown up	06ALL	0	20WP	G15_022		Non-Converged Contingency	956	1052	0.18472	-	G14_038T 345.00 - Hitchland Interchange 345KV CKT 1
FDNSLock-Blown up	06ALL	0	20WP	G15_022		Non-Converged Contingency	1420	1775	0.16704	-	BORDER 7345.00 - TUCO_2 345.00 345KV CKT 1
FDNSLock-Blown up	06ALL	0	20WP	G15_022		Non-Converged Contingency	1792	1792	0.16704	-	BORDER 7345.00 - WOODWARD DISTRICT EHV 345KV CKT 1
FDNSLock-Blown up	06ALL	2	15G	G15_022		Non-Converged Contingency	0	0	0.34632	-	SPSCONT-02X
FDNSLock-Blown up	06ALL	2	15G	G15_022		Non-Converged Contingency	956	994	0.17725	-	G14-074T 345.00 - OKLAUNION 345KV CKT 1
FDNSLock-Blown up	06ALL	2	15G	G15_022		Non-Converged Contingency	956	994	0.17725	-	G14-074T 345.00 - TUCO INTERCHANGE 345KV CKT 1
FDNSLock-Blown up	06ALL	2	15G	G15_022		Non-Converged Contingency	956	1052	0.17316	-	G14_038T 345.00 - Hitchland Interchange 345KV CKT 1
FDNSLock-Blown up	06ALL	2	15G	G15_022		Non-Converged Contingency	956	1052	0.17316	-	G14_038T 345.00 - POTTER COUNTY INTERCHANGE 345KV CKT 1
FDNSLock-Blown up	06ALL	2	15G	G15_022		Non-Converged Contingency	560	560	0.17316	-	POTTER COUNTY INTERCHANGE (WAUK 90343-A) 345/230/13.2KV TRANSFORMER CKT 1
FDNSLock-Blown up	06ALL	2	15G	G15_022		Non-Converged Contingency	1420	1775	0.1342	-	BORDER 7345.00 - TUCO_2 345.00 345KV CKT 1
FDNSLock-Blown up	06ALL	2	15G	G15_022		Non-Converged Contingency	1420	1775	0.1342	-	BORDER 7345.00 - TUCO_2 345.00 345KV CKT 2
FDNSLock-Blown up	06ALL	2	15SP	G15_022		Non-Converged Contingency	956	994	0.18265	-	G14-074T 345.00 - OKLAUNION 345KV CKT 1
FDNSLock-Blown up	06ALL	2	15WP	G15_022		Non-Converged Contingency	1033	1071	0.18777	-	G14-074T 345.00 - OKLAUNION 345KV CKT 1
FDNSLock-Blown up	06ALL	3	15G	G15_022		Non-Converged Contingency	0	0	0.39039	-	SPSCONT-02X
FDNSLock-Blown up	06ALL	3	15G	G15_022		Non-Converged Contingency	956	1052	0.1952	-	G14_038T 345.00 - Hitchland Interchange 345KV CKT 1
FDNSLock-Blown up	06ALL	3	15G	G15_022		Non-Converged Contingency	956	1052	0.1952	-	G14_038T 345.00 - POTTER COUNTY INTERCHANGE 345KV CKT 1
FDNSLock-Blown up	06ALL	3	15G	G15_022		Non-Converged Contingency	956	994	0.1704	-	G14-074T 345.00 - OKLAUNION 345KV CKT 1
FDNS	00NR	0	25SP	G15_022	TO->FROM	CARLISLE INTERCHANGE - TUCO INTERCHANGE 230KV CKT 1	319	351	0.07493	104.6408	JONES STATION - TUCO INTERCHANGE 230KV CKT 1
FDNS	06ALL	0	15SP	G15_022	FROM->TO	ELK CITY 230KV (ELKCTY-6) 230/138/13.8KV TRANSFORMER CKT 1	272	316	0.06372	125.7575	BASE CASE
FDNS	06ALL	0	15SP	G15_022	FROM->TO	ELK CITY 230KV (ELKCTY-6) 230/138/13.8KV TRANSFORMER CKT 1	272	316	0.06372	124.0328	BASE CASE
FDNS	06ALL	0	15G	G15_022	FROM->TO	ELK CITY 230KV (ELKCTY-6) 230/138/13.8KV TRANSFORMER CKT 1	287	316	0.0585	112.017	BASE CASE

SOLUTION	GROUP	SCENARIO	SEASON	SOURCE	DIRECTION	MONITORED ELEMENT	RATEA (MVA)	RATEB(MVA)	TDF	TC%LOADING (% MVA)	CONTINGENCY
FDNS	06ALL	0	15G	G15_022	FROM->TO	ELK CITY 230KV (ELKCTY-6) 230/138/13.8KV TRANSFORMER CKT 1	287	316	0.0585	110.2834	BASE CASE
FDNS	06ALL	0	15WP	G15_022	FROM->TO	ELK CITY 230KV (ELKCTY-6) 230/138/13.8KV TRANSFORMER CKT 1	287	316	0.06555	107.7723	BASE CASE
FDNS	06ALL	0	15WP	G15_022	FROM->TO	ELK CITY 230KV (ELKCTY-6) 230/138/13.8KV TRANSFORMER CKT 1	287	316	0.06555	106.4302	BASE CASE
FDNS	06ALL	0	20WP	G15_022	TO->FROM	GRAPEVINE INTERCHANGE - NICHOLS STATION 230KV CKT 1	329	361	0.09646	121.1428	BASE CASE
FDNS	06ALL	0	15G	G15_022	TO->FROM	GRAPEVINE INTERCHANGE - NICHOLS STATION 230KV CKT 1	319	351	0.06953	105.2692	BASE CASE
FDNS	06ALL	0	20SP	G15_022	TO->FROM	GRAPEVINE INTERCHANGE - NICHOLS STATION 230KV CKT 1	319	351	0.09833	99.5	BASE CASE
FDNS	00NR	0	25SP	G15_022	TO->FROM	KRESS INTERCHANGE - SWISHER COUNTY INTERCHANGE 115KV CKT 1	159	175	0.52974	113.7396	PALO DURO SUB - RANDALL COUNTY INTERCHANGE 115KV CKT 1
FDNS	00NR	0	25SP	G15_022	TO->FROM	KRESS INTERCHANGE - SWISHER COUNTY INTERCHANGE 115KV CKT 1	159	175	0.52974	113.0319	SPP-SWPS-T66
FDNS	00NR	0	25SP	G15_022	TO->FROM	KRESS INTERCHANGE - SWISHER COUNTY INTERCHANGE 115KV CKT 1	159	175	0.52974	112.9751	HAPPY INTERCHANGE - PALO DURO SUB 115KV CKT 1
FDNS	00NR	0	25SP	G15_022	TO->FROM	KRESS INTERCHANGE - SWISHER COUNTY INTERCHANGE 115KV CKT 1	159	175	0.48051	110.9298	KRESS INTERCHANGE - NEWHART 115KV CKT 1
FDNS	00NR	0	25SP	G15_022	TO->FROM	KRESS INTERCHANGE - SWISHER COUNTY INTERCHANGE 115KV CKT 1	159	175	0.57342	110.8824	BASE CASE
FDNS	00NR	0	25SP	G15_022	TO->FROM	KRESS INTERCHANGE - SWISHER COUNTY INTERCHANGE 115KV CKT 1	159	175	0.61399	107.0729	SWISHER COUNTY INTERCHANGE - TUCO_2 230.00 230KV CKT 1
FDNS	00NR	0	25SP	G15_022	TO->FROM	KRESS INTERCHANGE - SWISHER COUNTY INTERCHANGE 115KV CKT 1	159	175	0.57148	105.5989	TUCO INTERCHANGE (GE M102345) 230/115/13.2KV TRANSFORMER CKT 1
FDNS	00NR	0	25SP	G15_022	TO->FROM	KRESS INTERCHANGE - SWISHER COUNTY INTERCHANGE 115KV CKT 1	159	175	0.56885	105.5317	PLANT X STATION (WH ALM20171) 230/115/13.2KV TRANSFORMER CKT 1
FDNS	00NR	0	25SP	G15_022	TO->FROM	KRESS INTERCHANGE - SWISHER COUNTY INTERCHANGE 115KV CKT 1	159	175	0.56836	105.5067	FLOYD COUNTY INTERCHANGE - TUCO INTERCHANGE 115KV CKT 1
FDNS	00NR	0	25SP	G15_022	TO->FROM	KRESS INTERCHANGE - SWISHER COUNTY INTERCHANGE 115KV CKT 1	159	175	0.5716	105.3746	TUCO INTERCHANGE (ENRCO 136401) 230/115/13.2KV TRANSFORMER CKT 2
FDNS	00NR	0	25SP	G15_022	TO->FROM	KRESS INTERCHANGE - SWISHER COUNTY INTERCHANGE 115KV CKT 1	159	175	0.56631	105.2356	NEWHART 230 (UPDATE LATER) 230/115/13.2KV TRANSFORMER CKT 2
FDNS	00NR	0	25SP	G15_022	TO->FROM	KRESS INTERCHANGE - SWISHER COUNTY INTERCHANGE 115KV CKT 1	159	175	0.56631	105.2356	NEWHART 230 (WAUK WT01105) 230/115/13.2KV TRANSFORMER CKT 1
FDNS	00NR	0	25SP	G15_022	TO->FROM	KRESS INTERCHANGE - SWISHER COUNTY INTERCHANGE 115KV CKT 1	159	175	0.57884	104.3933	TUCO INTERCHANGE - TUCO_2 230.00 230KV CKT 1
FDNS	00NR	0	25SP	G15_022	TO->FROM	KRESS INTERCHANGE - SWISHER COUNTY INTERCHANGE 115KV CKT 1	159	175	0.57342	104.2617	GEN525562 1-TOLK GEN #2 24 KV
FDNS	00NR	0	25SP	G15_022	TO->FROM	KRESS INTERCHANGE - SWISHER COUNTY INTERCHANGE 115KV CKT 1	159	175	0.57342	104.2499	GEN525561 1-TOLK GEN #1 24 KV
FDNS	00NR	0	25SP	G15_022	TO->FROM	KRESS INTERCHANGE - SWISHER COUNTY INTERCHANGE 115KV CKT 1	159	175	0.57477	104.0712	JONES STATION - TUCO INTERCHANGE 230KV CKT 1
FDNS	00NR	0	25SP	G15_022	TO->FROM	KRESS INTERCHANGE - SWISHER COUNTY INTERCHANGE 115KV CKT 1	159	175	0.56578	103.3146	HALE CO INTERCHANGE - PLANT X STATION 115KV CKT 1
FDNS	00NR	0	25SP	G15_022	TO->FROM	KRESS INTERCHANGE - SWISHER COUNTY INTERCHANGE 115KV CKT 1	159	175	0.57307	103.2366	LAMB COUNTY INTERCHANGE - TOLK STATION WEST 230KV CKT 1
FDNS	00NR	0	25SP	G15_022	TO->FROM	KRESS INTERCHANGE - SWISHER COUNTY INTERCHANGE 115KV CKT 1	159	175	0.57307	103.2298	LAMB COUNTY INTERCHANGE (WH ALM20172) 230/115/13.2KV TRANSFORMER CKT 1
FDNS	00NR	0	25SP	G15_022	TO->FROM	KRESS INTERCHANGE - SWISHER COUNTY INTERCHANGE 115KV CKT 1	159	175	0.57307	103.2298	SPP-SWPS-K37
FDNS	00NR	0	25SP	G15_022	TO->FROM	KRESS INTERCHANGE - SWISHER COUNTY INTERCHANGE 115KV CKT 1	159	175	0.57418	103.1378	CARLISLE INTERCHANGE - TUCO INTERCHANGE 230KV CKT 1
FDNS	00NR	0	25SP	G15_022	TO->FROM	KRESS INTERCHANGE - SWISHER COUNTY INTERCHANGE 115KV CKT 1	159	175	0.57543	103.0692	TUCO INTERCHANGE - YOAKUM_345 345.00 345KV CKT 1
FDNS	00NR	0	25SP	G15_022	TO->FROM	KRESS INTERCHANGE - SWISHER COUNTY INTERCHANGE 115KV CKT 1	159	175	0.57028	102.8106	CROSBY COUNTY INTERCHANGE - LUBBOCK EAST INTERCHANGE 115KV CKT 1
FDNS	06ALL	0	25SP	G15_022	TO->FROM	KRESS INTERCHANGE - SWISHER COUNTY INTERCHANGE 115KV CKT 1	159	175	0.59282	102.0941	AMARILLO SOUTH INTERCHANGE - SWISHER COUNTY INTERCHANGE 230KV CKT 1
FDNS	06ALL	0	25SP	G15_022	TO->FROM	KRESS INTERCHANGE - SWISHER COUNTY INTERCHANGE 115KV CKT 1	159	175	0.47501	100.5462	KRESS INTERCHANGE - NEWHART 115KV CKT 1
FDNS	06ALL	0	25SP	G15_022	TO->FROM	KRESS INTERCHANGE - SWISHER COUNTY INTERCHANGE 115KV CKT 1	159	175	0.56578	99.6	BASE CASE
FDNS	06ALL	0	15WP	G15_022	FROM->TO	TUCO INTERCHANGE (GE M1022338) 345/230/13.2KV TRANSFORMER CKT 1	560	560	0.22794	123.6189	TUCO INTERCHANGE (SIEM 8743066) 345/230/13.2KV TRANSFORMER CKT 2
FDNS	06ALL	0	15WP	G15_022	FROM->TO	TUCO INTERCHANGE (GE M1022338) 345/230/13.2KV TRANSFORMER CKT 1	560	560	0.22794	121.7966	TUCO INTERCHANGE (SIEM 8743066) 345/230/13.2KV TRANSFORMER CKT 2
FDNS	06ALL	0	15WP	G15_022	FROM->TO	TUCO INTERCHANGE (GE M1022338) 345/230/13.2KV TRANSFORMER CKT 1	560	560	0.24056	120.4848	TUCO_2 345.00 (TUCO_2 XFMR) 345/230/13.2KV TRANSFORMER CKT 1
FDNS	06ALL	0	15WP	G15_022	FROM->TO	TUCO INTERCHANGE (GE M1022338) 345/230/13.2KV TRANSFORMER CKT 1	560	560	0.24056	118.8811	TUCO_2 345.00 (TUCO_2 XFMR) 345/230/13.2KV TRANSFORMER CKT 1
FDNS	06ALL	0	15SP	G15_022	FROM->TO	TUCO INTERCHANGE (GE M1022338) 345/230/13.2KV TRANSFORMER CKT 1	560	560	0.22114	113.3311	TUCO INTERCHANGE (SIEM 8743066) 345/230/13.2KV TRANSFORMER CKT 2
FDNS	06ALL	0	15SP	G15_022	FROM->TO	TUCO INTERCHANGE (GE M1022338) 345/230/13.2KV TRANSFORMER CKT 1	560	560	0.22114	111.3719	TUCO INTERCHANGE (SIEM 8743066) 345/230/13.2KV TRANSFORMER CKT 2
FDNS	06ALL	0	15SP	G15_022	FROM->TO	TUCO INTERCHANGE (GE M1022338) 345/230/13.2KV TRANSFORMER CKT 1	560	560	0.23397	110.0342	TUCO_2 345.00 (TUCO_2 XFMR) 345/230/13.2KV TRANSFORMER CKT 1
FDNS	06ALL	0	15SP	G15_022	FROM->TO	TUCO INTERCHANGE (GE M1022338) 345/230/13.2KV TRANSFORMER CKT 1	560	560	0.23397	108.332	TUCO_2 345.00 (TUCO_2 XFMR) 345/230/13.2KV TRANSFORMER CKT 1
FDNS	06ALL	0	15SP	G15_022	FROM->TO	TUCO_2 345.00 (TUCO_2 XFMR) 345/230/13.2KV TRANSFORMER CKT 1	560	560	0.25315	145.8188	TUCO INTERCHANGE - TUCO_2 345.00 345KV CKT 1
FDNS	06ALL	0	15SP	G15_022	FROM->TO	TUCO_2 345.00 (TUCO_2 XFMR) 345/230/13.2KV TRANSFORMER CKT 1	560	560	0.25315	142.7342	TUCO INTERCHANGE - TUCO_2 345.00 345KV CKT 1
FDNS	06ALL	0	15WP	G15_022	FROM->TO	TUCO_2 345.00 (TUCO_2 XFMR) 345/230/13.2KV TRANSFORMER CKT 1	560	560	0.26007	138.8622	TUCO INTERCHANGE - TUCO_2 345.00 345KV CKT 1
FDNS	06ALL	0	15WP	G15_022	FROM->TO	TUCO_2 345.00 (TUCO_2 XFMR) 345/230/13.2KV TRANSFORMER CKT 1	560	560	0.26007	136.3817	TUCO INTERCHANGE - TUCO_2 345.00 345KV CKT 1
FDNS	06ALL	0	15WP	G15_022	FROM->TO	TUCO_2 345.00 (TUCO_2 XFMR) 345/230/13.2KV TRANSFORMER CKT 1	560	560	0.24024	109.7547	TUCO INTERCHANGE (GE M1022338) 345/230/13.2KV TRANSFORMER CKT 1
FDNS	06ALL	0	15WP	G15_022	FROM->TO	TUCO_2 345.00 (TUCO_2 XFMR) 345/230/13.2KV TRANSFORMER CKT 1	560	560	0.24024	108.6761	TUCO INTERCHANGE (GE M1022338) 345/230/13.2KV TRANSFORMER CKT 1
FDNS	06NR	0	15G	G15_022	FROM->TO	TUCO_2 345.00 (TUCO_2 XFMR) 345/230/13.2KV TRANSFORMER CKT 1	560	560	0.03179	107.6222	TUCO INTERCHANGE (GE M1022338) 345/230/13.2KV TRANSFORMER CKT 1
FDNS	06NR	0	15G	G15_022	FROM->TO	TUCO_2 345.00 (TUCO_2 XFMR) 345/230/13.2KV TRANSFORMER CKT 1	560	560	0.03179	106.6939	TUCO INTERCHANGE (GE M1022338) 345/230/13.2KV TRANSFORMER CKT 1
FDNS	06ALL	0	15WP	G15_022	FROM->TO	TUCO_2 345.00 (TUCO_2 XFMR) 345/230/13.2KV TRANSFORMER CKT 1	560	560	0.22734	102.7663	TUCO INTERCHANGE (SIEM 8743066) 345/230/13.2KV TRANSFORMER CKT 2
FDNS	06ALL	0	15WP	G15_022	FROM->TO	TUCO_2 345.00 (TUCO_2 XFMR) 345/230/13.2KV TRANSFORMER CKT 1	560	560	0.22734	101.7947	TUCO INTERCHANGE (SIEM 8743066) 345/230/13.2KV TRANSFORMER CKT 2
FDNS	06NR	0	15G	G15_022	FROM->TO	TUCO_2 345.00 (TUCO_2 XFMR) 345/230/13.2KV TRANSFORMER CKT 1	560	560	0.03184	100.8238	TUCO INTERCHANGE (SIEM 8743066) 345/230/13.2KV TRANSFORMER CKT 2
FDNS	06NR	0	15G	G15_022	FROM->TO	TUCO_2 345.00 (TUCO_2 XFMR) 345/230/13.2KV TRANSFORMER CKT 1	560	560	0.03184	100	TUCO INTERCHANGE (SIEM 8743066) 345/230/13.2KV TRANSFORMER CKT 2
FDNS	06ALL	0	15SP	G15_022	FROM->TO	TUCO_2 345.00 (TUCO_2 XFMR) 345/230/13.2KV TRANSFORMER CKT 1	560	560	0.23427	99.6	TUCO INTERCHANGE (GE M1022338) 345/230/13.2KV TRANSFORMER CKT 1
FDNS	00NR	2	25SP	G15_022	TO->FROM	CARLISLE INTERCHANGE - TUCO INTERCHANGE 230KV CKT 1	319	351	0.07487	105.1859	JONES STATION - TUCO INTERCHANGE 230KV CKT 1
FDNS	06ALL	2	15SP	G15_022	FROM->TO	ELK CITY 230KV (ELKCTY-6) 230/138/13.8KV TRANSFORMER CKT 1	272	316	0.06376	125.7818	BASE CASE
FDNS	06ALL	2	15SP	G15_022	FROM->TO	ELK CITY 230KV (ELKCTY-6) 230/138/13.8KV TRANSFORMER CKT 1	272	316	0.06376	124.4125	BASE CASE
FDNS	06ALL	2	15G	G15_022	FROM->TO	ELK CITY 230KV (ELKCTY-6) 230/138/13.8KV TRANSFORMER CKT 1	287	316	0.05896	111.2694	BASE CASE
FDNS	06ALL	2	15G	G15_022	FROM->TO	ELK CITY 230KV (ELKCTY-6) 230/138/13.8KV TRANSFORMER CKT 1	287	316	0.05896	110.3238	BASE CASE
FDNS	06ALL	2	15WP	G15_022	FROM->TO	ELK CITY 230KV (ELKCTY-6) 230/138/13.8KV TRANSFORMER CKT 1	287	316	0.06553	107.6385	BASE CASE
FDNS	06ALL	2	15WP	G15_022	FROM->TO	ELK CITY 230KV (ELKCTY-6) 230/138/13.8KV TRANSFORMER CKT 1	287	316	0.06553	106.6339	BASE CASE
FDNS	06ALL	2	20SP	G15_022	FROM->TO	ELK CITY 230KV (ELKCTY-6) 230/138/13.8KV TRANSFORMER CKT 1	272	316	0.06382	103.949	BASE CASE
FDNS	06ALL	2	20SP	G15_022	FROM->TO	ELK CITY 230KV (ELKCTY-6) 230/138/13.8KV TRANSFORMER CKT 1	272	316	0.06382	103.7414	BASE CASE
FDNS	06ALL	2	20WP	G15_022	FROM->TO	ELK CITY 230KV (ELKCTY-6) 230/138/13.8KV TRANSFORMER CKT 1	287	316	0.06307	101.967	BASE CASE
FDNS	06ALL	2	20WP	G15_022	FROM->TO	ELK CITY 230KV (ELKCTY-6) 230/138/13.8KV TRANSFORMER CKT 1	287	316	0.06307	101.2457	BASE CASE
FDNS	00NR	2	25SP	G15_022	TO->FROM	KRESS INTERCHANGE - SWISHER COUNTY INTERCHANGE 115KV CKT 1	159	175	0.52989	113.4321	PALO DURO SUB - RANDALL COUNTY INTERCHANGE 115KV CKT 1
FDNS	00NR	2	25SP	G15_022	TO->FROM	KRESS INTERCHANGE - SWISHER COUNTY INTERCHANGE 115KV CKT 1	159	175	0.52989	112.7241	SPP-SWPS-T66
FDNS	00NR	2	25SP	G15_022	TO->FROM	KRESS INTERCHANGE - SWISHER COUNTY INTERCHANGE 115KV CKT 1	159	175	0.52989	112.6698	HAPPY INTERCHANGE - PALO DURO SUB 115KV CKT 1
FDNS	00NR	2	25SP	G15_022	TO->FROM	KRESS INTERCHANGE - SWISHER COUNTY INTERCHANGE 115KV CKT 1	159	175	0.57342	110.9216	BASE CASE
FDNS	00NR	2	25SP	G15_022	TO->FROM	KRESS INTERCHANGE - SWISHER COUNTY INTERCHANGE 115KV CKT 1	159	175	0.48052	110.8558	KRESS INTERCHANGE - NEWHART 115KV CKT 1
FDNS	00NR	2	25SP	G15_022	TO->FROM	KRESS INTERCHANGE - SWISHER COUNTY INTERCHANGE 115KV CKT 1	159	175	0.61329	106.1146	SWISHER COUNTY INTERCHANGE - TUCO_2 230.00 230KV CKT 1
FDNS	00NR	2	25SP	G15_022	TO->FROM	KRESS INTERCHANGE - SWISHER COUNTY INTERCHANGE 115KV CKT 1	159	175	0.57147	105.6562	TUCO INTERCHANGE (GE M102345) 230/115/13.2KV TRANSFORMER CKT 1
FDNS	00NR	2	25SP	G15_022	TO->FROM	KRESS INTERCHANGE - SWISHER COUNTY INTERCHANGE 115KV CKT 1	159	175	0.56836	105.5831	FLOYD COUNTY INTERCHANGE - TUCO INTERCHANGE 115KV CKT 1
FDNS	00NR	2	25SP	G15_022	TO->FROM	KRESS INTERCHANGE - SWISHER COUNTY INTERCHANGE 115KV CKT 1	159	175	0.56885	105.5636	PLANT X STATION (WH ALM20171) 230/115/13.2KV TRANSFORMER CKT 1
FDNS	00NR	2	25SP	G15_022	TO->FROM	KRESS INTERCHANGE - SWISHER COUNTY INTERCHANGE 115KV CKT 1	159	175	0.5716	105.4221	TUCO INTERCHANGE (ENRCO 136401) 230/115/13.2KV TRANSFORMER CKT 2
FDNS	00NR	2	25SP	G15_022	TO->FROM	KRESS INTERCHANGE - SWISHER COUNTY INTERCHANGE 115KV CKT 1	159	175	0.56631	105.2537	NEWHART 230 (UPDATE LATER) 230/115/13.2KV TRANSFORMER CKT 2

SOLUTION	GROUP	SCENARIO	SEASON	SOURCE	DIRECTION	MONITORED ELEMENT	RATEA (MVA)	RATEB(MVA)	TDF	TC%LOADING (% MVA)	CONTINGENCY
FDNS	00NR	2	25SP	G15_022	TO->FROM	KRESS INTERCHANGE - SWISHER COUNTY INTERCHANGE 115KV CKT 1	159	175	0.56631	105.2537	NEWHART 230 (WAUK WT01105) 230/115/13.2KV TRANSFORMER CKT 1
FDNS	00NR	2	25SP	G15_022	TO->FROM	KRESS INTERCHANGE - SWISHER COUNTY INTERCHANGE 115KV CKT 1	159	175	0.57884	104.4695	TUCO INTERCHANGE - TUCO_2 230.00 230KV CKT 1
FDNS	00NR	2	25SP	G15_022	TO->FROM	KRESS INTERCHANGE - SWISHER COUNTY INTERCHANGE 115KV CKT 1	159	175	0.57342	104.2427	GEN525562 1-TOLK GEN #2 24 KV
FDNS	00NR	2	25SP	G15_022	TO->FROM	KRESS INTERCHANGE - SWISHER COUNTY INTERCHANGE 115KV CKT 1	159	175	0.57342	104.1961	GEN525561 1-TOLK GEN #1 24 KV
FDNS	00NR	2	25SP	G15_022	TO->FROM	KRESS INTERCHANGE - SWISHER COUNTY INTERCHANGE 115KV CKT 1	159	175	0.57477	104.1141	JONES STATION - TUCO INTERCHANGE 230KV CKT 1
FDNS	00NR	2	25SP	G15_022	TO->FROM	KRESS INTERCHANGE - SWISHER COUNTY INTERCHANGE 115KV CKT 1	159	175	0.56578	103.3208	HALE CO INTERCHANGE - PLANT X STATION 115KV CKT 1
FDNS	00NR	2	25SP	G15_022	TO->FROM	KRESS INTERCHANGE - SWISHER COUNTY INTERCHANGE 115KV CKT 1	159	175	0.57307	103.2541	LAMB COUNTY INTERCHANGE - TOLK STATION WEST 230KV CKT 1
FDNS	00NR	2	25SP	G15_022	TO->FROM	KRESS INTERCHANGE - SWISHER COUNTY INTERCHANGE 115KV CKT 1	159	175	0.57307	103.2474	LAMB COUNTY INTERCHANGE (WH ALM20172) 230/115/13.2KV TRANSFORMER CKT 1
FDNS	00NR	2	25SP	G15_022	TO->FROM	KRESS INTERCHANGE - SWISHER COUNTY INTERCHANGE 115KV CKT 1	159	175	0.57307	103.2474	SPP-SWPS-K37
FDNS	00NR	2	25SP	G15_022	TO->FROM	KRESS INTERCHANGE - SWISHER COUNTY INTERCHANGE 115KV CKT 1	159	175	0.57418	103.179	CARLISLE INTERCHANGE - TUCO INTERCHANGE 230KV CKT 1
FDNS	00NR	2	25SP	G15_022	TO->FROM	KRESS INTERCHANGE - SWISHER COUNTY INTERCHANGE 115KV CKT 1	159	175	0.57543	103.136	TUCO INTERCHANGE - YOAKUM_345 345.00 345KV CKT 1
FDNS	00NR	2	25SP	G15_022	TO->FROM	KRESS INTERCHANGE - SWISHER COUNTY INTERCHANGE 115KV CKT 1	159	175	0.57342	102.9374	GEN526331 1-JONES GEN #1 22 KV
FDNS	00NR	2	25SP	G15_022	TO->FROM	KRESS INTERCHANGE - SWISHER COUNTY INTERCHANGE 115KV CKT 1	159	175	0.57028	102.8661	CROSBY COUNTY INTERCHANGE - LUBBOCK EAST INTERCHANGE 115KV CKT 1
FDNS	06ALL	2	25SP	G15_022	TO->FROM	KRESS INTERCHANGE - SWISHER COUNTY INTERCHANGE 115KV CKT 1	159	175	0.47539	100.4044	KRESS INTERCHANGE - NEWHART 115KV CKT 1
FDNS	06ALL	2	15G	G15_022	FROM->TO	TUCO INTERCHANGE (GE M1022338) 345/230/13.2KV TRANSFORMER CKT 1	560	560	0.20722	103.2984	TUCO_2 345.00 (TUCO_2 XFMR) 345/230/13.2KV TRANSFORMER CKT 1
FDNS	06ALL	2	15G	G15_022	FROM->TO	TUCO INTERCHANGE (GE M1022338) 345/230/13.2KV TRANSFORMER CKT 1	560	560	0.20722	100.3016	TUCO_2 345.00 (TUCO_2 XFMR) 345/230/13.2KV TRANSFORMER CKT 1
FDNS	06ALL	2	15G	G15_022	FROM->TO	TUCO_2 345.00 (TUCO_2 XFMR) 345/230/13.2KV TRANSFORMER CKT 1	560	560	0.24928	167.6169	TUCO INTERCHANGE - TUCO_2 345.00 345KV CKT 1
FDNS	06ALL	2	15G	G15_022	FROM->TO	TUCO_2 345.00 (TUCO_2 XFMR) 345/230/13.2KV TRANSFORMER CKT 1	560	560	0.24928	164.2629	TUCO INTERCHANGE - TUCO_2 345.00 345KV CKT 1
FDNS	06ALL	2	15SP	G15_022	FROM->TO	TUCO_2 345.00 (TUCO_2 XFMR) 345/230/13.2KV TRANSFORMER CKT 1	560	560	0.25554	149.8147	TUCO INTERCHANGE - TUCO_2 345.00 345KV CKT 1
FDNS	06ALL	2	15SP	G15_022	FROM->TO	TUCO_2 345.00 (TUCO_2 XFMR) 345/230/13.2KV TRANSFORMER CKT 1	560	560	0.25554	147.216	TUCO INTERCHANGE - TUCO_2 345.00 345KV CKT 1
FDNS	06ALL	2	15WP	G15_022	FROM->TO	TUCO_2 345.00 (TUCO_2 XFMR) 345/230/13.2KV TRANSFORMER CKT 1	560	560	0.26226	141.8557	TUCO INTERCHANGE - TUCO_2 345.00 345KV CKT 1
FDNS	06ALL	2	15WP	G15_022	FROM->TO	TUCO_2 345.00 (TUCO_2 XFMR) 345/230/13.2KV TRANSFORMER CKT 1	560	560	0.26226	139.9334	TUCO INTERCHANGE - TUCO_2 345.00 345KV CKT 1
FDNS	06ALL	2	20SP	G15_022	FROM->TO	TUCO_2 345.00 (TUCO_2 XFMR) 345/230/13.2KV TRANSFORMER CKT 1	560	560	0.25562	112.3827	TUCO INTERCHANGE - TUCO_2 345.00 345KV CKT 1
FDNS	06ALL	2	20SP	G15_022	FROM->TO	TUCO_2 345.00 (TUCO_2 XFMR) 345/230/13.2KV TRANSFORMER CKT 1	560	560	0.25562	112.1069	TUCO INTERCHANGE - TUCO_2 345.00 345KV CKT 1
FDNS	00NR	3	25SP	G15_022	TO->FROM	CARLISLE INTERCHANGE - TUCO INTERCHANGE 230KV CKT 1	319	351	0.07326	102.9279	JONES STATION - TUCO INTERCHANGE 230KV CKT 1
FDNS	06ALL	3	15SP	G15_022	FROM->TO	ELK CITY 230KV (ELKCTY-6) 230/138/13.8KV TRANSFORMER CKT 1	272	316	0.06315	123.9727	BASE CASE
FDNS	06ALL	3	15SP	G15_022	FROM->TO	ELK CITY 230KV (ELKCTY-6) 230/138/13.8KV TRANSFORMER CKT 1	272	316	0.06315	122.7526	BASE CASE
FDNS	06ALL	3	15G	G15_022	FROM->TO	ELK CITY 230KV (ELKCTY-6) 230/138/13.8KV TRANSFORMER CKT 1	287	316	0.05839	109.3338	BASE CASE
FDNS	06ALL	3	15G	G15_022	FROM->TO	ELK CITY 230KV (ELKCTY-6) 230/138/13.8KV TRANSFORMER CKT 1	287	316	0.05839	108.4212	BASE CASE
FDNS	06ALL	3	15WP	G15_022	FROM->TO	ELK CITY 230KV (ELKCTY-6) 230/138/13.8KV TRANSFORMER CKT 1	287	316	0.06492	106.1239	BASE CASE
FDNS	06ALL	3	15WP	G15_022	FROM->TO	ELK CITY 230KV (ELKCTY-6) 230/138/13.8KV TRANSFORMER CKT 1	287	316	0.06492	105.1628	BASE CASE
FDNS	06ALL	3	20SP	G15_022	FROM->TO	ELK CITY 230KV (ELKCTY-6) 230/138/13.8KV TRANSFORMER CKT 1	272	316	0.06314	102.7547	BASE CASE
FDNS	06ALL	3	20SP	G15_022	FROM->TO	ELK CITY 230KV (ELKCTY-6) 230/138/13.8KV TRANSFORMER CKT 1	272	316	0.06314	102.5743	BASE CASE
FDNS	06ALL	3	20WP	G15_022	FROM->TO	ELK CITY 230KV (ELKCTY-6) 230/138/13.8KV TRANSFORMER CKT 1	287	316	0.06244	100.8598	BASE CASE
FDNS	06ALL	3	20WP	G15_022	FROM->TO	ELK CITY 230KV (ELKCTY-6) 230/138/13.8KV TRANSFORMER CKT 1	287	316	0.06244	100.2492	BASE CASE
FDNS	06ALL	3	15G	G15_022	TO->FROM	GRAPEVINE INTERCHANGE - NICHOLS STATION 230KV CKT 1	319	351	0.07146	100.925	BASE CASE
FDNS	00NR	3	25SP	G15_022	TO->FROM	KRESS INTERCHANGE - SWISHER COUNTY INTERCHANGE 115KV CKT 1	159	175	0.52956	111.399	PALO DURO SUB - RANDALL COUNTY INTERCHANGE 115KV CKT 1
FDNS	00NR	3	25SP	G15_022	TO->FROM	KRESS INTERCHANGE - SWISHER COUNTY INTERCHANGE 115KV CKT 1	159	175	0.52956	110.6831	SPP-SWPS-T66
FDNS	00NR	3	25SP	G15_022	TO->FROM	KRESS INTERCHANGE - SWISHER COUNTY INTERCHANGE 115KV CKT 1	159	175	0.52956	110.6401	HAPPY INTERCHANGE - PALO DURO SUB 115KV CKT 1
FDNS	00NR	3	25SP	G15_022	TO->FROM	KRESS INTERCHANGE - SWISHER COUNTY INTERCHANGE 115KV CKT 1	159	175	0.48029	110.4133	KRESS INTERCHANGE - NEWHART 115KV CKT 1
FDNS	00NR	3	25SP	G15_022	TO->FROM	KRESS INTERCHANGE - SWISHER COUNTY INTERCHANGE 115KV CKT 1	159	175	0.57309	110.0473	BASE CASE
FDNS	00NR	3	25SP	G15_022	TO->FROM	KRESS INTERCHANGE - SWISHER COUNTY INTERCHANGE 115KV CKT 1	159	175	0.5686	104.967	PLANT X STATION (WH ALM20171) 230/115/13.2KV TRANSFORMER CKT 1
FDNS	00NR	3	25SP	G15_022	TO->FROM	KRESS INTERCHANGE - SWISHER COUNTY INTERCHANGE 115KV CKT 1	159	175	0.56804	104.8092	FLOYD COUNTY INTERCHANGE - TUCO INTERCHANGE 115KV CKT 1
FDNS	00NR	3	25SP	G15_022	TO->FROM	KRESS INTERCHANGE - SWISHER COUNTY INTERCHANGE 115KV CKT 1	159	175	0.57114	104.8072	TUCO INTERCHANGE (GE M102345) 230/115/13.2KV TRANSFORMER CKT 1
FDNS	00NR	3	25SP	G15_022	TO->FROM	KRESS INTERCHANGE - SWISHER COUNTY INTERCHANGE 115KV CKT 1	159	175	0.57127	104.5803	TUCO INTERCHANGE (ENRCO 136401) 230/115/13.2KV TRANSFORMER CKT 2
FDNS	00NR	3	25SP	G15_022	TO->FROM	KRESS INTERCHANGE - SWISHER COUNTY INTERCHANGE 115KV CKT 1	159	175	0.56595	104.366	NEWHART 230 (UPDATE LATER) 230/115/13.2KV TRANSFORMER CKT 2
FDNS	00NR	3	25SP	G15_022	TO->FROM	KRESS INTERCHANGE - SWISHER COUNTY INTERCHANGE 115KV CKT 1	159	175	0.56595	104.366	NEWHART 230 (WAUK WT01105) 230/115/13.2KV TRANSFORMER CKT 1
FDNS	00NR	3	25SP	G15_022	TO->FROM	KRESS INTERCHANGE - SWISHER COUNTY INTERCHANGE 115KV CKT 1	159	175	0.61221	104.3049	SWISHER COUNTY INTERCHANGE - TUCO_2 230.00 230KV CKT 1
FDNS	00NR	3	25SP	G15_022	TO->FROM	KRESS INTERCHANGE - SWISHER COUNTY INTERCHANGE 115KV CKT 1	159	175	0.57832	103.3239	TUCO INTERCHANGE - TUCO_2 230.00 230KV CKT 1
FDNS	00NR	3	25SP	G15_022	TO->FROM	KRESS INTERCHANGE - SWISHER COUNTY INTERCHANGE 115KV CKT 1	159	175	0.5744	103.2076	JONES STATION - TUCO INTERCHANGE 230KV CKT 1
FDNS	00NR	3	25SP	G15_022	TO->FROM	KRESS INTERCHANGE - SWISHER COUNTY INTERCHANGE 115KV CKT 1	159	175	0.5655	102.7744	HALE CO INTERCHANGE - PLANT X STATION 115KV CKT 1
FDNS	00NR	3	25SP	G15_022	TO->FROM	KRESS INTERCHANGE - SWISHER COUNTY INTERCHANGE 115KV CKT 1	159	175	0.57309	102.5709	GEN525562 1-TOLK GEN #2 24 KV
FDNS	00NR	3	25SP	G15_022	TO->FROM	KRESS INTERCHANGE - SWISHER COUNTY INTERCHANGE 115KV CKT 1	159	175	0.57309	102.5367	GEN525561 1-TOLK GEN #1 24 KV
FDNS	00NR	3	25SP	G15_022	TO->FROM	KRESS INTERCHANGE - SWISHER COUNTY INTERCHANGE 115KV CKT 1	159	175	0.57275	102.5293	LAMB COUNTY INTERCHANGE - TOLK STATION WEST 230KV CKT 1
FDNS	00NR	3	25SP	G15_022	TO->FROM	KRESS INTERCHANGE - SWISHER COUNTY INTERCHANGE 115KV CKT 1	159	175	0.57275	102.5185	LAMB COUNTY INTERCHANGE (WH ALM20172) 230/115/13.2KV TRANSFORMER CKT 1
FDNS	00NR	3	25SP	G15_022	TO->FROM	KRESS INTERCHANGE - SWISHER COUNTY INTERCHANGE 115KV CKT 1	159	175	0.57275	102.5185	SPP-SWPS-K37
FDNS	00NR	3	25SP	G15_022	TO->FROM	KRESS INTERCHANGE - SWISHER COUNTY INTERCHANGE 115KV CKT 1	159	175	0.57381	102.2732	CARLISLE INTERCHANGE - TUCO INTERCHANGE 230KV CKT 1
FDNS	00NR	3	25SP	G15_022	TO->FROM	KRESS INTERCHANGE - SWISHER COUNTY INTERCHANGE 115KV CKT 1	159	175	0.56996	102.1125	CROSBY COUNTY INTERCHANGE - LUBBOCK EAST INTERCHANGE 115KV CKT 1
FDNS	00NR	3	25SP	G15_022	TO->FROM	KRESS INTERCHANGE - SWISHER COUNTY INTERCHANGE 115KV CKT 1	159	175	0.57482	101.9366	TUCO INTERCHANGE - YOAKUM_345 345.00 345KV CKT 1
FDNS	06ALL	3	25SP	G15_022	TO->FROM	KRESS INTERCHANGE - SWISHER COUNTY INTERCHANGE 115KV CKT 1	159	175	0.47605	101.0124	KRESS INTERCHANGE - NEWHART 115KV CKT 1
FDNS	06ALL	3	25SP	G15_022	TO->FROM	KRESS INTERCHANGE - SWISHER COUNTY INTERCHANGE 115KV CKT 1	159	175	0.56689	100.3736	BASE CASE
FDNS	06ALL	3	15G	G15_022	FROM->TO	TUCO_2 345.00 (TUCO_2 XFMR) 345/230/13.2KV TRANSFORMER CKT 1	560	560	0.23597	151.8506	TUCO INTERCHANGE - TUCO_2 345.00 345KV CKT 1
FDNS	06ALL	3	15G	G15_022	FROM->TO	TUCO_2 345.00 (TUCO_2 XFMR) 345/230/13.2KV TRANSFORMER CKT 1	560	560	0.23597	149.0893	TUCO INTERCHANGE - TUCO_2 345.00 345KV CKT 1
FDNS	06ALL	3	15SP	G15_022	FROM->TO	TUCO_2 345.00 (TUCO_2 XFMR) 345/230/13.2KV TRANSFORMER CKT 1	560	560	0.24167	133.4173	TUCO INTERCHANGE - TUCO_2 345.00 345KV CKT 1
FDNS	06ALL	3	15SP	G15_022	FROM->TO	TUCO_2 345.00 (TUCO_2 XFMR) 345/230/13.2KV TRANSFORMER CKT 1	560	560	0.24167	131.8248	TUCO INTERCHANGE - TUCO_2 345.00 345KV CKT 1
FDNS	06ALL	3	15WP	G15_022	FROM->TO	TUCO_2 345.00 (TUCO_2 XFMR) 345/230/13.2KV TRANSFORMER CKT 1	560	560	0.24788	127.9846	TUCO INTERCHANGE - TUCO_2 345.00 345KV CKT 1
FDNS	06ALL	3	15WP	G15_022	FROM->TO	TUCO_2 345.00 (TUCO_2 XFMR) 345/230/13.2KV TRANSFORMER CKT 1	560	560	0.24788	126.6738	TUCO INTERCHANGE - TUCO_2 345.00 345KV CKT 1
FDNS	06ALL	3	20WP	G15_022	FROM->TO	TUCO_2 345.00 (TUCO_2 XFMR) 345/230/13.2KV TRANSFORMER CKT 1	560	560	0.23875	121.9391	TUCO INTERCHANGE - TUCO_2 345.00 345KV CKT 1
FDNS	06ALL	3	20WP	G15_022	FROM->TO	TUCO_2 345.00 (TUCO_2 XFMR) 345/230/13.2KV TRANSFORMER CKT 1	560	560	0.23875	121.0095	TUCO INTERCHANGE - TUCO_2 345.00 345KV CKT 1
FDNS	06ALL	3	20SP	G15_022	FROM->TO	TUCO_2 345.00 (TUCO_2 XFMR) 345/230/13.2KV TRANSFORMER CKT 1	560	560	0.24149	100.2304	TUCO INTERCHANGE - TUCO_2 345.00 345KV CKT 1
FDNS	06ALL	3	20SP	G15_022	FROM->TO	TUCO_2 345.00 (TUCO_2 XFMR) 345/230/13.2KV TRANSFORMER CKT 1	560	560	0.24149	100.1212	TUCO INTERCHANGE - TUCO_2 345.00 345KV CKT 1
FDNS	00NR	4	25SP	G15_022	TO->FROM	CARLISLE INTERCHANGE - TUCO INTERCHANGE 230KV CKT 1	319	351	0.0731	103.1286	JONES STATION - TUCO INTERCHANGE 230KV CKT 1
FDNS	06ALL	4	15SP	G15_022	FROM->TO	CHISHOLM6 230.00 - ELK CITY 230KV 230KV CKT 1	353	353	0.06812	100.9254	BASE CASE
FDNS	06ALL	4	15SP	G15_022	FROM->TO	ELK CITY 230KV (ELKCTY-6) 230/138/13.8KV TRANSFORMER CKT 1	272	316	0.06812	129.8441	BASE CASE
FDNS	06ALL	4	15SP	G15_022	FROM->TO	ELK CITY 230KV (ELKCTY-6) 230/138/13.8KV TRANSFORMER CKT 1	272	316	0.06812	128.5805	BASE CASE

SOLUTION	GROUP	SCENARIO	SEASON	SOURCE	DIRECTION	MONITORED ELEMENT	RATEA (MVA)	RATEB(MVA)	TDF	TC%LOADING (% MVA)	CONTINGENCY
FDNS	06ALL	4	15G	G15_022	FROM->TO	ELK CITY 230KV (ELKCTY-6) 230/138/13.8KV TRANSFORMER CKT 1	287	316	0.06352	116.3182	BASE CASE
FDNS	06ALL	4	15G	G15_022	FROM->TO	ELK CITY 230KV (ELKCTY-6) 230/138/13.8KV TRANSFORMER CKT 1	287	316	0.06352	115.4161	BASE CASE
FDNS	06ALL	4	15WP	G15_022	FROM->TO	ELK CITY 230KV (ELKCTY-6) 230/138/13.8KV TRANSFORMER CKT 1	287	316	0.07003	112.0283	BASE CASE
FDNS	06ALL	4	15WP	G15_022	FROM->TO	ELK CITY 230KV (ELKCTY-6) 230/138/13.8KV TRANSFORMER CKT 1	287	316	0.07003	111.0401	BASE CASE
FDNS	06ALL	4	20SP	G15_022	FROM->TO	ELK CITY 230KV (ELKCTY-6) 230/138/13.8KV TRANSFORMER CKT 1	272	316	0.06809	107.1637	BASE CASE
FDNS	06ALL	4	20SP	G15_022	FROM->TO	ELK CITY 230KV (ELKCTY-6) 230/138/13.8KV TRANSFORMER CKT 1	272	316	0.06809	106.9127	BASE CASE
FDNS	06ALL	4	20WP	G15_022	FROM->TO	ELK CITY 230KV (ELKCTY-6) 230/138/13.8KV TRANSFORMER CKT 1	287	316	0.06739	106.7868	BASE CASE
FDNS	06ALL	4	20WP	G15_022	FROM->TO	ELK CITY 230KV (ELKCTY-6) 230/138/13.8KV TRANSFORMER CKT 1	287	316	0.06739	106.1189	BASE CASE
FDNS	00NR	4	25SP	G15_022	TO->FROM	KRESS INTERCHANGE - SWISHER COUNTY INTERCHANGE 115KV CKT 1	159	175	0.52958	111.3453	PALO DURO SUB - RANDALL COUNTY INTERCHANGE 115KV CKT 1
FDNS	00NR	4	25SP	G15_022	TO->FROM	KRESS INTERCHANGE - SWISHER COUNTY INTERCHANGE 115KV CKT 1	159	175	0.52958	110.6315	SPP-SWPS-T66
FDNS	00NR	4	25SP	G15_022	TO->FROM	KRESS INTERCHANGE - SWISHER COUNTY INTERCHANGE 115KV CKT 1	159	175	0.52958	110.5891	HAPPY INTERCHANGE - PALO DURO SUB 115KV CKT 1
FDNS	00NR	4	25SP	G15_022	TO->FROM	KRESS INTERCHANGE - SWISHER COUNTY INTERCHANGE 115KV CKT 1	159	175	0.4803	110.3966	KRESS INTERCHANGE - NEWHART 115KV CKT 1
FDNS	00NR	4	25SP	G15_022	TO->FROM	KRESS INTERCHANGE - SWISHER COUNTY INTERCHANGE 115KV CKT 1	159	175	0.57308	110.0746	BASE CASE
FDNS	00NR	4	25SP	G15_022	TO->FROM	KRESS INTERCHANGE - SWISHER COUNTY INTERCHANGE 115KV CKT 1	159	175	0.56859	104.9887	PLANT X STATION (WH_ALM20171) 230/115/13.2KV TRANSFORMER CKT 1
FDNS	00NR	4	25SP	G15_022	TO->FROM	KRESS INTERCHANGE - SWISHER COUNTY INTERCHANGE 115KV CKT 1	159	175	0.56803	104.8446	FLOYD COUNTY INTERCHANGE - TUCO INTERCHANGE 115KV CKT 1
FDNS	00NR	4	25SP	G15_022	TO->FROM	KRESS INTERCHANGE - SWISHER COUNTY INTERCHANGE 115KV CKT 1	159	175	0.57113	104.8327	TUCO INTERCHANGE (GE_M102345) 230/115/13.2KV TRANSFORMER CKT 1
FDNS	00NR	4	25SP	G15_022	TO->FROM	KRESS INTERCHANGE - SWISHER COUNTY INTERCHANGE 115KV CKT 1	159	175	0.57126	104.6063	TUCO INTERCHANGE (ENRCO 136401) 230/115/13.2KV TRANSFORMER CKT 2
FDNS	00NR	4	25SP	G15_022	TO->FROM	KRESS INTERCHANGE - SWISHER COUNTY INTERCHANGE 115KV CKT 1	159	175	0.56595	104.3876	NEWHART 230 (UPDATE LATER) 230/115/13.2KV TRANSFORMER CKT 2
FDNS	00NR	4	25SP	G15_022	TO->FROM	KRESS INTERCHANGE - SWISHER COUNTY INTERCHANGE 115KV CKT 1	159	175	0.56595	104.3876	NEWHART 230 (WAUK WT01105) 230/115/13.2KV TRANSFORMER CKT 1
FDNS	00NR	4	25SP	G15_022	TO->FROM	KRESS INTERCHANGE - SWISHER COUNTY INTERCHANGE 115KV CKT 1	159	175	0.61189	104.0346	SWISHER COUNTY INTERCHANGE - TUCO_2 230.00 230KV CKT 1
FDNS	00NR	4	25SP	G15_022	TO->FROM	KRESS INTERCHANGE - SWISHER COUNTY INTERCHANGE 115KV CKT 1	159	175	0.57832	103.3438	TUCO INTERCHANGE - TUCO_2 230.00 230KV CKT 1
FDNS	00NR	4	25SP	G15_022	TO->FROM	KRESS INTERCHANGE - SWISHER COUNTY INTERCHANGE 115KV CKT 1	159	175	0.57439	103.2293	JONES STATION - TUCO INTERCHANGE 230KV CKT 1
FDNS	00NR	4	25SP	G15_022	TO->FROM	KRESS INTERCHANGE - SWISHER COUNTY INTERCHANGE 115KV CKT 1	159	175	0.5655	102.7849	HALE CO INTERCHANGE - PLANT X STATION 115KV CKT 1
FDNS	00NR	4	25SP	G15_022	TO->FROM	KRESS INTERCHANGE - SWISHER COUNTY INTERCHANGE 115KV CKT 1	159	175	0.57274	102.5493	LAMB COUNTY INTERCHANGE - TOLK STATION WEST 230KV CKT 1
FDNS	00NR	4	25SP	G15_022	TO->FROM	KRESS INTERCHANGE - SWISHER COUNTY INTERCHANGE 115KV CKT 1	159	175	0.57274	102.5465	LAMB COUNTY INTERCHANGE (WH_ALM20172) 230/115/13.2KV TRANSFORMER CKT 1
FDNS	00NR	4	25SP	G15_022	TO->FROM	KRESS INTERCHANGE - SWISHER COUNTY INTERCHANGE 115KV CKT 1	159	175	0.57274	102.5465	SPP-SWPS-K37
FDNS	00NR	4	25SP	G15_022	TO->FROM	KRESS INTERCHANGE - SWISHER COUNTY INTERCHANGE 115KV CKT 1	159	175	0.57308	102.5038	GEN525562 1-TOLK GEN #2 24 KV
FDNS	00NR	4	25SP	G15_022	TO->FROM	KRESS INTERCHANGE - SWISHER COUNTY INTERCHANGE 115KV CKT 1	159	175	0.57308	102.4707	GEN525561 1-TOLK GEN #1 24 KV
FDNS	00NR	4	25SP	G15_022	TO->FROM	KRESS INTERCHANGE - SWISHER COUNTY INTERCHANGE 115KV CKT 1	159	175	0.5738	102.2945	CARLISLE INTERCHANGE - TUCO INTERCHANGE 230KV CKT 1
FDNS	00NR	4	25SP	G15_022	TO->FROM	KRESS INTERCHANGE - SWISHER COUNTY INTERCHANGE 115KV CKT 1	159	175	0.56995	102.1408	CROSBY COUNTY INTERCHANGE - LUBBOCK EAST INTERCHANGE 115KV CKT 1
FDNS	00NR	4	25SP	G15_022	TO->FROM	KRESS INTERCHANGE - SWISHER COUNTY INTERCHANGE 115KV CKT 1	159	175	0.57478	101.933	TUCO INTERCHANGE - YOAKUM_345 345.00 345KV CKT 1
FDNS	06ALL	4	25SP	G15_022	TO->FROM	KRESS INTERCHANGE - SWISHER COUNTY INTERCHANGE 115KV CKT 1	159	175	0.47587	100.9991	KRESS INTERCHANGE - NEWHART 115KV CKT 1
FDNS	06ALL	4	25SP	G15_022	TO->FROM	KRESS INTERCHANGE - SWISHER COUNTY INTERCHANGE 115KV CKT 1	159	175	0.56715	100.7448	BASE CASE
FDNS	06ALL	4	15G	G15_022	FROM->TO	POTTER COUNTY INTERCHANGE (WAUK 90343-A) 345/230/13.2KV TRANSFORMER CKT 1	560	560	0.22355	111.314	PLSNT_HILL7 345.00 - POTTER COUNTY INTERCHANGE 345KV CKT 1
FDNS	06ALL	4	15G	G15_022	FROM->TO	POTTER COUNTY INTERCHANGE (WAUK 90343-A) 345/230/13.2KV TRANSFORMER CKT 1	560	560	0.22355	111.0141	PLSNT_HILL7 345.00 - POTTER COUNTY INTERCHANGE 345KV CKT 1
FDNS	06ALL	4	15G	G15_022	FROM->TO	TUCO_2 345.00 (TUCO_2 XFMR) 345/230/13.2KV TRANSFORMER CKT 1	560	560	0.20693	127.7356	TUCO INTERCHANGE - TUCO_2 345.00 345KV CKT 1
FDNS	06ALL	4	15G	G15_022	FROM->TO	TUCO_2 345.00 (TUCO_2 XFMR) 345/230/13.2KV TRANSFORMER CKT 1	560	560	0.20693	126.397	TUCO INTERCHANGE - TUCO_2 345.00 345KV CKT 1
FDNS	06ALL	4	15SP	G15_022	FROM->TO	TUCO_2 345.00 (TUCO_2 XFMR) 345/230/13.2KV TRANSFORMER CKT 1	560	560	0.21198	114.1941	TUCO INTERCHANGE - TUCO_2 345.00 345KV CKT 1
FDNS	06ALL	4	15SP	G15_022	FROM->TO	TUCO_2 345.00 (TUCO_2 XFMR) 345/230/13.2KV TRANSFORMER CKT 1	560	560	0.21198	113.3239	TUCO INTERCHANGE - TUCO_2 345.00 345KV CKT 1
FDNS	06ALL	4	15WP	G15_022	FROM->TO	TUCO_2 345.00 (TUCO_2 XFMR) 345/230/13.2KV TRANSFORMER CKT 1	560	560	0.21765	108.1334	TUCO INTERCHANGE - TUCO_2 345.00 345KV CKT 1
FDNS	06ALL	4	15WP	G15_022	FROM->TO	TUCO_2 345.00 (TUCO_2 XFMR) 345/230/13.2KV TRANSFORMER CKT 1	560	560	0.21765	107.4733	TUCO INTERCHANGE - TUCO_2 345.00 345KV CKT 1
FDNS	06ALL	4	20WP	G15_022	FROM->TO	TUCO_2 345.00 (TUCO_2 XFMR) 345/230/13.2KV TRANSFORMER CKT 1	560	560	0.20967	102.8738	TUCO INTERCHANGE - TUCO_2 345.00 345KV CKT 1
FDNS	06ALL	4	20WP	G15_022	FROM->TO	TUCO_2 345.00 (TUCO_2 XFMR) 345/230/13.2KV TRANSFORMER CKT 1	560	560	0.20967	102.4022	TUCO INTERCHANGE - TUCO_2 345.00 345KV CKT 1
FDNS	00NR	5	25SP	G15_022	TO->FROM	CARLISLE INTERCHANGE - TUCO INTERCHANGE 230KV CKT 1	319	351	0.0736	103.4722	JONES STATION - TUCO INTERCHANGE 230KV CKT 1
FDNS	06ALL	5	15SP	G15_022	FROM->TO	CHISHOLM6 230.00 - ELK CITY 230KV 230KV CKT 1	353	353	0.06813	100.9761	BASE CASE
FDNS	06ALL	5	15SP	G15_022	FROM->TO	ELK CITY 230KV (ELKCTY-6) 230/138/13.8KV TRANSFORMER CKT 1	272	316	0.06813	129.9064	BASE CASE
FDNS	06ALL	5	15SP	G15_022	FROM->TO	ELK CITY 230KV (ELKCTY-6) 230/138/13.8KV TRANSFORMER CKT 1	272	316	0.06813	128.6412	BASE CASE
FDNS	06ALL	5	15G	G15_022	FROM->TO	ELK CITY 230KV (ELKCTY-6) 230/138/13.8KV TRANSFORMER CKT 1	287	316	0.06353	116.3419	BASE CASE
FDNS	06ALL	5	15G	G15_022	FROM->TO	ELK CITY 230KV (ELKCTY-6) 230/138/13.8KV TRANSFORMER CKT 1	287	316	0.06353	115.4406	BASE CASE
FDNS	06ALL	5	15WP	G15_022	FROM->TO	ELK CITY 230KV (ELKCTY-6) 230/138/13.8KV TRANSFORMER CKT 1	287	316	0.07005	112.0665	BASE CASE
FDNS	06ALL	5	15WP	G15_022	FROM->TO	ELK CITY 230KV (ELKCTY-6) 230/138/13.8KV TRANSFORMER CKT 1	287	316	0.07005	111.0777	BASE CASE
FDNS	06ALL	5	20SP	G15_022	FROM->TO	ELK CITY 230KV (ELKCTY-6) 230/138/13.8KV TRANSFORMER CKT 1	272	316	0.06811	107.1735	BASE CASE
FDNS	06ALL	5	20SP	G15_022	FROM->TO	ELK CITY 230KV (ELKCTY-6) 230/138/13.8KV TRANSFORMER CKT 1	272	316	0.06811	106.9225	BASE CASE
FDNS	06ALL	5	20WP	G15_022	FROM->TO	ELK CITY 230KV (ELKCTY-6) 230/138/13.8KV TRANSFORMER CKT 1	287	316	0.0674	106.7889	BASE CASE
FDNS	06ALL	5	20WP	G15_022	FROM->TO	ELK CITY 230KV (ELKCTY-6) 230/138/13.8KV TRANSFORMER CKT 1	287	316	0.0674	106.1215	BASE CASE
FDNS	00NR	5	25SP	G15_022	TO->FROM	KRESS INTERCHANGE - SWISHER COUNTY INTERCHANGE 115KV CKT 1	159	175	0.52958	111.3371	PALO DURO SUB - RANDALL COUNTY INTERCHANGE 115KV CKT 1
FDNS	00NR	5	25SP	G15_022	TO->FROM	KRESS INTERCHANGE - SWISHER COUNTY INTERCHANGE 115KV CKT 1	159	175	0.52958	110.6233	SPP-SWPS-T66
FDNS	00NR	5	25SP	G15_022	TO->FROM	KRESS INTERCHANGE - SWISHER COUNTY INTERCHANGE 115KV CKT 1	159	175	0.52958	110.5818	HAPPY INTERCHANGE - PALO DURO SUB 115KV CKT 1
FDNS	00NR	5	25SP	G15_022	TO->FROM	KRESS INTERCHANGE - SWISHER COUNTY INTERCHANGE 115KV CKT 1	159	175	0.48028	110.3811	KRESS INTERCHANGE - NEWHART 115KV CKT 1
FDNS	00NR	5	25SP	G15_022	TO->FROM	KRESS INTERCHANGE - SWISHER COUNTY INTERCHANGE 115KV CKT 1	159	175	0.57308	110.0757	BASE CASE
FDNS	00NR	5	25SP	G15_022	TO->FROM	KRESS INTERCHANGE - SWISHER COUNTY INTERCHANGE 115KV CKT 1	159	175	0.56859	104.9867	PLANT X STATION (WH_ALM20171) 230/115/13.2KV TRANSFORMER CKT 1
FDNS	00NR	5	25SP	G15_022	TO->FROM	KRESS INTERCHANGE - SWISHER COUNTY INTERCHANGE 115KV CKT 1	159	175	0.56804	104.8515	FLOYD COUNTY INTERCHANGE - TUCO INTERCHANGE 115KV CKT 1
FDNS	00NR	5	25SP	G15_022	TO->FROM	KRESS INTERCHANGE - SWISHER COUNTY INTERCHANGE 115KV CKT 1	159	175	0.57114	104.8396	TUCO INTERCHANGE (GE_M102345) 230/115/13.2KV TRANSFORMER CKT 1
FDNS	00NR	5	25SP	G15_022	TO->FROM	KRESS INTERCHANGE - SWISHER COUNTY INTERCHANGE 115KV CKT 1	159	175	0.57127	104.6127	TUCO INTERCHANGE (ENRCO 136401) 230/115/13.2KV TRANSFORMER CKT 2
FDNS	00NR	5	25SP	G15_022	TO->FROM	KRESS INTERCHANGE - SWISHER COUNTY INTERCHANGE 115KV CKT 1	159	175	0.56594	104.3817	NEWHART 230 (UPDATE LATER) 230/115/13.2KV TRANSFORMER CKT 2
FDNS	00NR	5	25SP	G15_022	TO->FROM	KRESS INTERCHANGE - SWISHER COUNTY INTERCHANGE 115KV CKT 1	159	175	0.56594	104.3817	NEWHART 230 (WAUK WT01105) 230/115/13.2KV TRANSFORMER CKT 1
FDNS	00NR	5	25SP	G15_022	TO->FROM	KRESS INTERCHANGE - SWISHER COUNTY INTERCHANGE 115KV CKT 1	159	175	0.61186	103.9905	SWISHER COUNTY INTERCHANGE - TUCO_2 230.00 230KV CKT 1
FDNS	00NR	5	25SP	G15_022	TO->FROM	KRESS INTERCHANGE - SWISHER COUNTY INTERCHANGE 115KV CKT 1	159	175	0.57439	103.2408	JONES STATION - TUCO INTERCHANGE 230KV CKT 1
FDNS	00NR	5	25SP	G15_022	TO->FROM	KRESS INTERCHANGE - SWISHER COUNTY INTERCHANGE 115KV CKT 1	159	175	0.57817	103.1924	TUCO INTERCHANGE - TUCO_2 230.00 230KV CKT 1
FDNS	00NR	5	25SP	G15_022	TO->FROM	KRESS INTERCHANGE - SWISHER COUNTY INTERCHANGE 115KV CKT 1	159	175	0.56549	102.7783	HALE CO INTERCHANGE - PLANT X STATION 115KV CKT 1
FDNS	00NR	5	25SP	G15_022	TO->FROM	KRESS INTERCHANGE - SWISHER COUNTY INTERCHANGE 115KV CKT 1	159	175	0.57274	102.5509	LAMB COUNTY INTERCHANGE - TOLK STATION WEST 230KV CKT 1
FDNS	00NR	5	25SP	G15_022	TO->FROM	KRESS INTERCHANGE - SWISHER COUNTY INTERCHANGE 115KV CKT 1	159	175	0.57274	102.5481	LAMB COUNTY INTERCHANGE (WH_ALM20172) 230/115/13.2KV TRANSFORMER CKT 1
FDNS	00NR	5	25SP	G15_022	TO->FROM	KRESS INTERCHANGE - SWISHER COUNTY INTERCHANGE 115KV CKT 1	159	175	0.57274	102.5481	SPP-SWPS-K37
FDNS	00NR	5	25SP	G15_022	TO->FROM	KRESS INTERCHANGE - SWISHER COUNTY INTERCHANGE 115KV CKT 1	159	175	0.57308	102.5033	GEN525562 1-TOLK GEN #2 24 KV
FDNS	00NR	5	25SP	G15_022	TO->FROM	KRESS INTERCHANGE - SWISHER COUNTY INTERCHANGE 115KV CKT 1	159	175	0.57308	102.4702	GEN525561 1-TOLK GEN #1 24 KV

SOLUTION	GROUP	SCENARIO	SEASON	SOURCE	DIRECTION	MONITORED ELEMENT	RATEA (MVA)	RATEB(MVA)	TDF	TC%LOADING (% MVA)	CONTINGENCY
FDNS	00NR	5	25SP	G15_022	TO->FROM	KRESS INTERCHANGE - SWISHER COUNTY INTERCHANGE 115KV CKT 1	159	175	0.57381	102.3055	CARLISLE INTERCHANGE - TUCO INTERCHANGE 230KV CKT 1
FDNS	00NR	5	25SP	G15_022	TO->FROM	KRESS INTERCHANGE - SWISHER COUNTY INTERCHANGE 115KV CKT 1	159	175	0.56995	102.1412	CROSBY COUNTY INTERCHANGE - LUBBOCK EAST INTERCHANGE 115KV CKT 1
FDNS	00NR	5	25SP	G15_022	TO->FROM	KRESS INTERCHANGE - SWISHER COUNTY INTERCHANGE 115KV CKT 1	159	175	0.57478	101.933	TUCO_2 345.00 - YOAKUM_345 345.00 345KV CKT 1
FDNS	06ALL	5	25SP	G15_022	TO->FROM	KRESS INTERCHANGE - SWISHER COUNTY INTERCHANGE 115KV CKT 1	159	175	0.47588	101.0034	KRESS INTERCHANGE - NEWHART 115KV CKT 1
FDNS	06ALL	5	25SP	G15_022	TO->FROM	KRESS INTERCHANGE - SWISHER COUNTY INTERCHANGE 115KV CKT 1	159	175	0.56716	100.7598	BASE CASE
FDNS	06ALL	5	15G	G15_022	FROM->TO	POTTER COUNTY INTERCHANGE (WAUK 90343-A) 345/230/13.2KV TRANSFORMER CKT 1	560	560	0.22351	111.2115	PLSNT_HILL7 345.00 - POTTER COUNTY INTERCHANGE 345KV CKT 1
FDNS	06ALL	5	15G	G15_022	FROM->TO	POTTER COUNTY INTERCHANGE (WAUK 90343-A) 345/230/13.2KV TRANSFORMER CKT 1	560	560	0.22351	110.9126	PLSNT_HILL7 345.00 - POTTER COUNTY INTERCHANGE 345KV CKT 1
FDNS	00NR	6	25SP	G15_022	TO->FROM	CARLISLE INTERCHANGE - TUCO INTERCHANGE 230KV CKT 1	319	351	0.07363	103.4261	JONES STATION - TUCO INTERCHANGE 230KV CKT 1
FDNSLock-Blown up	09ALL	0	15G	G15_023		Non-Converged Contingency	720	720	0.67592	-	GRAND ISLAND - HOLT.CO3 345.00 345KV CKT 1
FDNSLock-Blown up	09ALL	0	15SP	G15_023		Non-Converged Contingency	720	720	0.67593	-	GRAND ISLAND - HOLT.CO3 345.00 345KV CKT 1
FDNSLock-Blown up	09ALL	0	15WP	G15_023		Non-Converged Contingency	720	720	0.67511	-	GRAND ISLAND - HOLT.CO3 345.00 345KV CKT 1
FDNSLock-Blown up	09ALL	2	15G	G15_023		Non-Converged Contingency	720	720	0.67604	-	GRAND ISLAND - HOLT.CO3 345.00 345KV CKT 1
FDNSLock-Blown up	09ALL	2	15SP	G15_023		Non-Converged Contingency	720	720	0.67671	-	GRAND ISLAND - HOLT.CO3 345.00 345KV CKT 1
FDNSLock-Blown up	09ALL	2	15WP	G15_023		Non-Converged Contingency	720	720	0.67552	-	GRAND ISLAND - HOLT.CO3 345.00 345KV CKT 1
FDNS	09NR	0	15G	G15_023	FROM->TO	G14-059T 230.00 - OGALLALA 230KV CKT 1	320	320	0.03088	125.8320	KEYSTONE - SIDNEY 345KV CKT 1
FDNS	00NR	0	15SP	G15_023	FROM->TO	G14-059T 230.00 - OGALLALA 230KV CKT 1	320	320	0.02962	124.5109	KEYSTONE - SIDNEY 345KV CKT 1
FDNS	09ALL	0	15G	G15_023	TO->FROM	GRAND ISLAND - HOLT.CO3 345.00 345KV CKT 1	720	720	1	105.6115	FT THOMPSON - FTTHOM2-LNX3345.00 345KV CKT Z
FDNS	09ALL	0	15WP	G15_023	TO->FROM	GRAND ISLAND - HOLT.CO3 345.00 345KV CKT 1	720	720	1	104.2632	FTTHOM2-LNX3345.00 - GRPRAR2-LNX3345.00 345KV CKT 1
FDNS	09ALL	0	15G	G15_023	TO->FROM	GRAND ISLAND - HOLT.CO3 345.00 345KV CKT 1	720	720	1	102.2864	GRPRAR2-LNX3345.00 - YANKTON 345KV CKT Z
FDNS	09ALL	0	15SP	G15_023	TO->FROM	GRAND ISLAND - HOLT.CO3 345.00 345KV CKT 1	720	720	1	101.7641	FT THOMPSON - FTTHOM2-LNX3345.00 345KV CKT Z
FDNS	09ALL	0	15WP	G15_023	TO->FROM	GRAND ISLAND - HOLT.CO3 345.00 345KV CKT 1	720	720	1	101.2599	FT THOMPSON - FTTHOM2-LNX3345.00 345KV CKT Z
FDNS	09ALL	0	15G	G15_023	TO->FROM	GRAND ISLAND - HOLT.CO3 345.00 345KV CKT 1	720	720	1	100.9998	FTTHOM2-LNX3345.00 - GRPRAR2-LNX3345.00 345KV CKT 1
FDNS	09ALL	0	15SP	G15_023	TO->FROM	GRAND ISLAND - HOLT.CO3 345.00 345KV CKT 1	720	720	1	100.8104	GRPRAR2-LNX3345.00 - YANKTON 345KV CKT Z
FDNS	09ALL	0	15WP	G15_023	TO->FROM	GRAND ISLAND - HOLT.CO3 345.00 345KV CKT 1	720	720	1	100.4388	GRPRAR2-LNX3345.00 - YANKTON 345KV CKT Z
FDNS	09ALL	0	15SP	G15_023	TO->FROM	GRAND ISLAND - HOLT.CO3 345.00 345KV CKT 1	720	720	1	100.1924	FTTHOM2-LNX3345.00 - GRPRAR2-LNX3345.00 345KV CKT 1
FDNS	09NR	2	15G	G15_023	FROM->TO	G14-059T 230.00 - OGALLALA 230KV CKT 1	320	320	0.03086	125.5977	KEYSTONE - SIDNEY 345KV CKT 1
FDNS	00NR	2	15SP	G15_023	FROM->TO	G14-059T 230.00 - OGALLALA 230KV CKT 1	320	320	0.0296	124.5047	KEYSTONE - SIDNEY 345KV CKT 1
FDNS	09ALL	2	15G	G15_023	TO->FROM	GRAND ISLAND - HOLT.CO3 345.00 345KV CKT 1	720	720	1	104.4652	FT THOMPSON - FTTHOM2-LNX3345.00 345KV CKT Z
FDNS	09ALL	2	15WP	G15_023	TO->FROM	GRAND ISLAND - HOLT.CO3 345.00 345KV CKT 1	720	720	1	103.0793	FTTHOM2-LNX3345.00 - GRPRAR2-LNX3345.00 345KV CKT 1
FDNS	09ALL	2	15G	G15_023	TO->FROM	GRAND ISLAND - HOLT.CO3 345.00 345KV CKT 1	720	720	1	102.1002	GRPRAR2-LNX3345.00 - YANKTON 345KV CKT Z
FDNS	09ALL	2	15SP	G15_023	TO->FROM	GRAND ISLAND - HOLT.CO3 345.00 345KV CKT 1	720	720	1	101.5484	FT THOMPSON - FTTHOM2-LNX3345.00 345KV CKT Z
FDNS	09ALL	2	15WP	G15_023	TO->FROM	GRAND ISLAND - HOLT.CO3 345.00 345KV CKT 1	720	720	1	101.0140	FT THOMPSON - FTTHOM2-LNX3345.00 345KV CKT Z
FDNS	09ALL	2	15SP	G15_023	TO->FROM	GRAND ISLAND - HOLT.CO3 345.00 345KV CKT 1	720	720	1	100.6774	GRPRAR2-LNX3345.00 - YANKTON 345KV CKT Z
FDNS	09ALL	2	15G	G15_023	TO->FROM	GRAND ISLAND - HOLT.CO3 345.00 345KV CKT 1	720	720	1	100.6442	FTTHOM2-LNX3345.00 - GRPRAR2-LNX3345.00 345KV CKT 1
FDNS	09ALL	2	15WP	G15_023	TO->FROM	GRAND ISLAND - HOLT.CO3 345.00 345KV CKT 1	720	720	1	100.1510	GRPRAR2-LNX3345.00 - YANKTON 345KV CKT Z
FDNS	09ALL	2	15SP	G15_023	TO->FROM	GRAND ISLAND - HOLT.CO3 345.00 345KV CKT 1	720	720	1	100.0000	FTTHOM2-LNX3345.00 - GRPRAR2-LNX3345.00 345KV CKT 1
FDNS	03ALL	0	15SP	G15_024	TO->FROM	BENTON - WICHITA 345KV CKT 1	878	956	0.25641	102.1058	GEN532751 1-WOLF CREEK GENERATING STATION UNIT 1
FDNS	03ALL	0	15SP	G15_025	TO->FROM	BENTON - WICHITA 345KV CKT 1	878	956	0.25641	102.1058	GEN532751 1-WOLF CREEK GENERATING STATION UNIT 1
FDNS	03ALL	0	15WP	G15_026	FROM->TO	BUCKNER7 345.00 - HOLCOMB 345KV CKT 1	726.6	726.6	0.43968	100.0000	G13-010T 345.00 - POST ROCK 345KV CKT 1
FDNS	03ALL	0	25SP	G15_026	FROM->TO	BUCKNER7 345.00 - HOLCOMB 345KV CKT 1	726.6	726.6	0.44454	99.8000	G13-010T 345.00 - POST ROCK 345KV CKT 1
FDNS	03ALL	0	15G	G15_026	FROM->TO	FPL SWITCH - MOORELAND 138KV CKT 1	287	287	0.0363	100.2134	BASE CASE
FDNS	03ALL	3	15WP	G15_026	FROM->TO	BUCKNER7 345.00 - HOLCOMB 345KV CKT 1	726.6	726.6	0.43881	100.0000	G13-010T 345.00 - POST ROCK 345KV CKT 1
FDNS	03ALL	0	25SP	G15_027	FROM->TO	CRKCK 3 115.00 - CUDAHY 115KV CKT 1	119.5	148.2	0.29876	114.6466	BUCKNER7 345.00 - HOLCOMB 345KV CKT 1
FDNS	03ALL	0	15WP	G15_027	FROM->TO	CRKCK 3 115.00 - CUDAHY 115KV CKT 1	119.5	148.2	0.29312	112.8578	BUCKNER7 345.00 - HOLCOMB 345KV CKT 1
FDNS	03ALL	0	20WP	G15_027	FROM->TO	CRKCK 3 115.00 - CUDAHY 115KV CKT 1	119.5	148.2	0.29819	102.2452	BUCKNER7 345.00 - HOLCOMB 345KV CKT 1
FDNS	03ALL	0	15G	G15_027	FROM->TO	CRKCK 3 115.00 - CUDAHY 115KV CKT 1	119.5	148.2	0.29299	102.0622	BUCKNER7 345.00 - HOLCOMB 345KV CKT 1
FDNS	03ALL	0	15WP	G15_027	FROM->TO	CRKCK 3 115.00 - CUDAHY 115KV CKT 1	119.5	148.2	0.29105	100.9918	BASE CASE
FDNS	03ALL	0	20SP	G15_027	FROM->TO	CRKCK 3 115.00 - CUDAHY 115KV CKT 1	119.5	148.2	0.29875	100.3302	BUCKNER7 345.00 - HOLCOMB 345KV CKT 1
FDNS	03ALL	0	25SP	G15_027	FROM->TO	CUDAHY - KISMET 3 115.00 115KV CKT 1	119.5	135.8	0.29876	117.8695	BUCKNER7 345.00 - HOLCOMB 345KV CKT 1
FDNS	03ALL	0	15WP	G15_027	FROM->TO	CUDAHY - KISMET 3 115.00 115KV CKT 1	119.5	148.2	0.29312	107.9114	BUCKNER7 345.00 - HOLCOMB 345KV CKT 1
FDNS	03ALL	0	20SP	G15_027	FROM->TO	CUDAHY - KISMET 3 115.00 115KV CKT 1	119.5	135.8	0.29875	102.7869	BUCKNER7 345.00 - HOLCOMB 345KV CKT 1
FDNS	03ALL	0	15G	G15_027	FROM->TO	FPL SWITCH - MOORELAND 138KV CKT 1	287	287	0.03469	100.2134	BASE CASE
FDNS	03ALL	0	25SP	G15_027	TO->FROM	GREENSBURG - SSTARTP3 115.00 115KV CKT 1	115.1	115.1	0.09657	119.3545	BASE CASE
FDNS	03ALL	0	20SP	G15_027	TO->FROM	GREENSBURG - SSTARTP3 115.00 115KV CKT 1	115.1	115.1	0.09642	117.3763	BASE CASE
FDNS	03ALL	0	20WP	G15_027	TO->FROM	GREENSBURG - SSTARTP3 115.00 115KV CKT 1	119.5	148.2	0.09597	115.8265	BASE CASE
FDNS	03ALL	0	15SP	G15_027	TO->FROM	GREENSBURG - SSTARTP3 115.00 115KV CKT 1	115.1	115.1	0.09725	114.7695	BASE CASE
FDNS	03ALL	0	15WP	G15_027	TO->FROM	GREENSBURG - SSTARTP3 115.00 115KV CKT 1	119.5	148.2	0.09666	109.0418	BASE CASE
FDNS	03ALL	0	15G	G15_027	TO->FROM	GREENSBURG - SSTARTP3 115.00 115KV CKT 1	119.5	134.6	0.09656	108.5867	BASE CASE
FDNS	03ALL	2	25SP	G15_027	FROM->TO	CRKCK 3 115.00 - CUDAHY 115KV CKT 1	119.5	148.2	0.36123	114.7906	BUCKNER7 345.00 - HOLCOMB 345KV CKT 1
FDNS	03ALL	2	15WP	G15_027	FROM->TO	CRKCK 3 115.00 - CUDAHY 115KV CKT 1	119.5	148.2	0.3528	110.1003	BUCKNER7 345.00 - HOLCOMB 345KV CKT 1
FDNS	03ALL	2	25SP	G15_027	FROM->TO	CRKCK 3 115.00 - CUDAHY 115KV CKT 1	119.5	148.2	0.36072	109.9181	FINNEY SWITCHING STATION - WALKTAP7 345.00 345KV CKT 1
FDNS	03ALL	2	20WP	G15_027	FROM->TO	CRKCK 3 115.00 - CUDAHY 115KV CKT 1	119.5	148.2	0.36015	103.9505	BUCKNER7 345.00 - HOLCOMB 345KV CKT 1
FDNS	03ALL	2	15G	G15_027	FROM->TO	CRKCK 3 115.00 - CUDAHY 115KV CKT 1	119.5	148.2	0.35292	102.0496	BUCKNER7 345.00 - HOLCOMB 345KV CKT 1
FDNS	03ALL	2	25SP	G15_027	FROM->TO	CRKCK 3 115.00 - CUDAHY 115KV CKT 1	119.5	148.2	0.35922	101.5683	BASE CASE
FDNS	03ALL	2	25SP	G15_027	FROM->TO	CUDAHY - KISMET 3 115.00 115KV CKT 1	119.5	135.8	0.36123	118.1751	BUCKNER7 345.00 - HOLCOMB 345KV CKT 1
FDNS	03ALL	2	25SP	G15_027	FROM->TO	CUDAHY - KISMET 3 115.00 115KV CKT 1	119.5	135.8	0.36072	112.3857	FINNEY SWITCHING STATION - WALKTAP7 345.00 345KV CKT 1
FDNS	03ALL	2	15WP	G15_027	FROM->TO	CUDAHY - KISMET 3 115.00 115KV CKT 1	119.5	148.2	0.3528	105.2764	BUCKNER7 345.00 - HOLCOMB 345KV CKT 1
FDNS	03ALL	2	20SP	G15_027	FROM->TO	CUDAHY - KISMET 3 115.00 115KV CKT 1	119.5	135.8	0.361	101.2921	BUCKNER7 345.00 - HOLCOMB 345KV CKT 1
FDNS	03ALL	2	25SP	G15_027	TO->FROM	GREENSBURG - SSTARTP3 115.00 115KV CKT 1	115.1	115.1	0.0876	119.8692	BASE CASE
FDNS	03ALL	2	20SP	G15_027	TO->FROM	GREENSBURG - SSTARTP3 115.00 115KV CKT 1	115.1	115.1	0.08755	118.3192	BASE CASE
FDNS	03ALL	2	20WP	G15_027	TO->FROM	GREENSBURG - SSTARTP3 115.00 115KV CKT 1	119.5	148.2	0.08699	116.2924	BASE CASE
FDNS	03ALL	2	15SP	G15_027	TO->FROM	GREENSBURG - SSTARTP3 115.00 115KV CKT 1	115.1	115.1	0.08843	115.7170	BASE CASE
FDNS	03ALL	2	15WP	G15_027	TO->FROM	GREENSBURG - SSTARTP3 115.00 115KV CKT 1	119.5	148.2	0.08786	110.2580	BASE CASE
FDNS	03ALL	2	15G	G15_027	TO->FROM	GREENSBURG - SSTARTP3 115.00 115KV CKT 1	119.5	134.6	0.08777	109.6848	BASE CASE
FDNS	08ALL	0	15WP	G15_028	FROM->TO	CHIKASKIA - KILDARE4 138KV CKT 1	143	143	0.34029	106.4486	HUNTERS7 345.00 - WOODRING 345KV CKT 1

SOLUTION	GROUP	SCENARIO	SEASON	SOURCE	DIRECTION	MONITORED ELEMENT	RATEA (MVA)	RATEB(MVA)	TDF	TC%LOADING (% MVA)	CONTINGENCY
FDNS	08ALL	0	15G	G15_028	FROM->TO	CHIKASKIA - KILDARE4 138KV CKT 1	143	143	0.34051	105.2570	HUNTERS7 345.00 - WOODRING 345KV CKT 1
FDNS	08ALL	0	15SP	G15_028	FROM->TO	CHIKASKIA - KILDARE4 138KV CKT 1	143	143	0.33936	101.8138	HUNTERS7 345.00 - WOODRING 345KV CKT 1
FDNS	01ALL	0	15G	G15_029	FROM->TO	FPL SWITCH - MOORELAND 138KV CKT 1	287	287	0.04822	114.0611	BASE CASE
FDNS	01ALL	0	15WP	G15_029	FROM->TO	FPL SWITCH - MOORELAND 138KV CKT 1	287	287	0.0523	106.2657	BASE CASE
FDNS	01ALL	0	20WP	G15_029	FROM->TO	FPL SWITCH - MOORELAND 138KV CKT 1	287	287	0.05278	105.9437	BASE CASE

G1: Stand Alone Power Flow Analysis (Constraints Requiring Transmission Reinforcement)

See next page.

SOLUTION	GROUP	SCENARIO	SEASON	SOURCE	DIRECTION	MONITORED ELEMENT	RATEA (MVA)	RATEB(MVA)	TDF	TC%LOADING (% MVA)	CONTINGENCY
FDNS	04ALL_G10_048	0	25SP	G10_048	TO->FROM	BEACH STATION - G10-48T 115.00 115KV CKT 1	80	88	0.41101	106.6117	MINGO (MINGO) 345/115/13.8KV TRANSFORMER CKT 1
FDNS	09ALL_G14_023	0	15G	G14_023	TO->FROM	FT RANDAL - G14_023T 230.00 230KV CKT 1	320	320	1	123.1182	KELLY - MEADOWGROVE4230.00 230KV CKT 1
FDNS	09ALL_G14_023	0	15SP	G14_023	TO->FROM	FT RANDAL - G14_023T 230.00 230KV CKT 1	320	320	1	122.6773	KELLY - MEADOWGROVE4230.00 230KV CKT 1
FDNS	09ALL_G14_023	0	25SP	G14_023	TO->FROM	FT RANDAL - G14_023T 230.00 230KV CKT 1	320	320	1	122.6357	KELLY - MEADOWGROVE4230.00 230KV CKT 1
FDNS	09ALL_G14_023	0	20WP	G14_023	TO->FROM	FT RANDAL - G14_023T 230.00 230KV CKT 1	320	320	1	122.5794	KELLY - MEADOWGROVE4230.00 230KV CKT 1
FDNS	09ALL_G14_023	0	15WP	G14_023	TO->FROM	FT RANDAL - G14_023T 230.00 230KV CKT 1	320	320	1	122.5172	KELLY - MEADOWGROVE4230.00 230KV CKT 1
FDNS	09ALL_G14_023	0	20SP	G14_023	TO->FROM	FT RANDAL - G14_023T 230.00 230KV CKT 1	320	320	1	122.5105	KELLY - MEADOWGROVE4230.00 230KV CKT 1
FDNS	09NR_G14_023	0	15G	G14_023	TO->FROM	FT RANDAL - G14_023T 230.00 230KV CKT 1	320	320	1	109.5358	KELLY - MEADOWGROVE4230.00 230KV CKT 1
FDNS	00NR_G14_023	0	25SP	G14_023	FROM->TO	FT RANDAL - SPENCER 115KV CKT 1	120	120	0.03376	103.2629	AINSWORTH - AINSWORTH 115KV CKT 1
FDNS	09ALL_G14_023	0	15G	G14_023	TO->FROM	KELLY - MEADOWGROVE4230.00 230KV CKT 1	368	368	1	108.9083	FT RANDAL - G14_023T 230.00 230KV CKT 1
FDNS	09ALL_G14_023	0	25SP	G14_023	TO->FROM	KELLY - MEADOWGROVE4230.00 230KV CKT 1	368	368	1	108.0742	FT RANDAL - G14_023T 230.00 230KV CKT 1
FDNS	09ALL_G14_023	0	15WP	G14_023	TO->FROM	KELLY - MEADOWGROVE4230.00 230KV CKT 1	368	368	1	107.9817	FT RANDAL - G14_023T 230.00 230KV CKT 1
FDNS	09ALL_G14_023	0	20WP	G14_023	TO->FROM	KELLY - MEADOWGROVE4230.00 230KV CKT 1	368	368	1	107.9186	FT RANDAL - G14_023T 230.00 230KV CKT 1
FDNS	09ALL_G14_023	0	20SP	G14_023	TO->FROM	KELLY - MEADOWGROVE4230.00 230KV CKT 1	368	368	1	107.6430	FT RANDAL - G14_023T 230.00 230KV CKT 1
FDNS	09ALL_G14_023	0	15SP	G14_023	TO->FROM	KELLY - MEADOWGROVE4230.00 230KV CKT 1	368	368	1	107.5517	FT RANDAL - G14_023T 230.00 230KV CKT 1
FDNS	09ALL_G14_023	2	15SP	G14_023	TO->FROM	ALBION - PETERSBURG 115KV CKT 1	137	137	0.0538	101.7154	BASE CASE
FDNS	09ALL_G14_023	2	15G	G14_023	TO->FROM	KELLY - MEADOWGROVE4230.00 230KV CKT 1	368	368	0.76549	100.3423	FT RANDAL - G14_023T 230.00 230KV CKT 1
FDNS	09ALL_G14_023	2	15SP	G14_023	FROM->TO	PETERSBRG.N7115.00 - PETERSBURG 115KV CKT Z1	137	137	0.0538	105.2806	BASE CASE
FDNSLock-Blown up	02ALL_G14_037	0	15G	G14_037		Non-Converged Contingency	956	1052	0.24413	-	FINNEY SWITCHING STATION - Hitchland Interchange 345KV CKT 1
FDNSLock-Blown up	02ALL_G14_037	0	15G	G14_037		Non-Converged Contingency	956	1052	0.24413	-	FINNEY SWITCHING STATION - HOLCOMB 345KV CKT 1
FDNSLock-Blown up	02ALL_G14_037	0	15G	G14_037		Non-Converged Contingency	0	0	0.24413	-	SPP-SWPS-05
FDNSLock-Blown up	02ALL_G14_037	2	15G	G14_037		Non-Converged Contingency	956.09	1051.7	0.25747	-	Hitchland Interchange - WALKTAP7 345.00 345KV CKT 1
FDNSLock-Blown up	02ALL_G14_037	3	15G	G14_037		Non-Converged Contingency	956.09	1051.7	0.24375	-	Hitchland Interchange - WALKTAP7 345.00 345KV CKT 1
FDNS	02ALL_G14_037	0	15G	G14_037	FROM->TO	FPL SWITCH - MOORELAND 138KV CKT 1	287	287	0.05913	110.2692	BASE CASE
FDNS	02ALL_G14_037	0	15G	G14_037	TO->FROM	FPL SWITCH - WOODWARD 138KV CKT 1	287	287	0.05913	104.2418	BASE CASE
FDNS	02ALL_G14_037	2	15G	G14_037	FROM->TO	FPL SWITCH - MOORELAND 138KV CKT 1	287	287	0.05855	109.1498	BASE CASE
FDNS	02ALL_G14_037	2	15G	G14_037	TO->FROM	FPL SWITCH - WOODWARD 138KV CKT 1	287	287	0.05855	103.1238	BASE CASE
FDNS	02ALL_G14_037	3	15G	G14_037	FROM->TO	FPL SWITCH - MOORELAND 138KV CKT 1	287	287	0.05958	110.5027	BASE CASE
FDNS	02ALL_G14_037	3	15G	G14_037	TO->FROM	FPL SWITCH - WOODWARD 138KV CKT 1	287	287	0.05958	104.4698	BASE CASE
FDNSLock-Blown up	02ALL_G14_038	0	15G	G14_038		Non-Converged Contingency	956	1052	0.24119	-	FINNEY SWITCHING STATION - Hitchland Interchange 345KV CKT 1
FDNSLock-Blown up	02ALL_G14_038	0	15G	G14_038		Non-Converged Contingency	956	1052	0.24119	-	FINNEY SWITCHING STATION - HOLCOMB 345KV CKT 1
FDNSLock-Blown up	02ALL_G14_038	0	15G	G14_038		Non-Converged Contingency	0	0	0.24119	-	SPP-SWPS-05
FDNSLock-Blown up	02ALL_G14_038	2	15G	G14_038		Non-Converged Contingency	956.09	1051.7	0.25438	-	Hitchland Interchange - WALKTAP7 345.00 345KV CKT 1
FDNS	02ALL_G14_038	0	15G	G14_038	FROM->TO	FPL SWITCH - MOORELAND 138KV CKT 1	287	287	0.05447	110.1325	BASE CASE
FDNS	02ALL_G14_038	0	15G	G14_038	TO->FROM	FPL SWITCH - WOODWARD 138KV CKT 1	287	287	0.05447	104.1435	BASE CASE
FDNS	02ALL_G14_038	0	20SP	G14_038	FROM->TO	POTTER COUNTY INTERCHANGE (WAUK 90343-A) 345/230/13.2KV TRANSFORMER CKT 1	560	560	0.21571	105.8497	GEN525561 1-TOLK GEN #1 24 KV
FDNS	02ALL_G14_038	0	20SP	G14_038	FROM->TO	POTTER COUNTY INTERCHANGE (WAUK 90343-A) 345/230/13.2KV TRANSFORMER CKT 1	560	560	0.24707	105.3322	FINNEY SWITCHING STATION - HOLCOMB 345KV CKT 1
FDNS	02ALL_G14_038	0	20SP	G14_038	FROM->TO	POTTER COUNTY INTERCHANGE (WAUK 90343-A) 345/230/13.2KV TRANSFORMER CKT 1	560	560	0.22806	104.0544	HITCHLAND INTERCHANGE - MOORE COUNTY INTERCHANGE 230KV CKT 1
FDNS	02ALL_G14_038	0	20SP	G14_038	FROM->TO	POTTER COUNTY INTERCHANGE (WAUK 90343-A) 345/230/13.2KV TRANSFORMER CKT 1	560	560	0.22806	104.0544	HITCHLAND INTERCHANGE - MOORE COUNTY INTERCHANGE 230KV CKT 1
FDNS	02ALL_G14_038	0	20SP	G14_038	FROM->TO	POTTER COUNTY INTERCHANGE (WAUK 90343-A) 345/230/13.2KV TRANSFORMER CKT 1	560	560	0.21571	103.8757	GEN525562 1-TOLK GEN #2 24 KV
FDNS	02ALL_G14_038	0	20SP	G14_038	FROM->TO	POTTER COUNTY INTERCHANGE (WAUK 90343-A) 345/230/13.2KV TRANSFORMER CKT 1	560	560	0.21571	103.6795	GEN525561 1-TOLK GEN #1 24 KV
FDNS	02ALL_G14_038	0	20SP	G14_038	FROM->TO	POTTER COUNTY INTERCHANGE (WAUK 90343-A) 345/230/13.2KV TRANSFORMER CKT 1	560	560	0.24707	102.7069	FINNEY SWITCHING STATION - HOLCOMB 345KV CKT 1
FDNS	02ALL_G14_038	0	20SP	G14_038	FROM->TO	POTTER COUNTY INTERCHANGE (WAUK 90343-A) 345/230/13.2KV TRANSFORMER CKT 1	560	560	0.21571	101.8195	GEN525562 1-TOLK GEN #2 24 KV
FDNS	02ALL_G14_038	0	20SP	G14_038	FROM->TO	POTTER COUNTY INTERCHANGE (WAUK 90343-A) 345/230/13.2KV TRANSFORMER CKT 1	560	560	0.22806	101.7943	HITCHLAND INTERCHANGE - MOORE COUNTY INTERCHANGE 230KV CKT 1
FDNS	02ALL_G14_038	0	20SP	G14_038	FROM->TO	POTTER COUNTY INTERCHANGE (WAUK 90343-A) 345/230/13.2KV TRANSFORMER CKT 1	560	560	0.22806	101.7943	HITCHLAND INTERCHANGE - MOORE COUNTY INTERCHANGE 230KV CKT 1
FDNS	02ALL_G14_038	0	20SP	G14_038	FROM->TO	POTTER COUNTY INTERCHANGE (WAUK 90343-A) 345/230/13.2KV TRANSFORMER CKT 1	560	560	0.24707	101.5133	FINNEY SWITCHING STATION - Hitchland Interchange 345KV CKT 1
FDNS	02ALL_G14_038	0	20SP	G14_038	FROM->TO	POTTER COUNTY INTERCHANGE (WAUK 90343-A) 345/230/13.2KV TRANSFORMER CKT 1	560	560	0.21571	101.2821	GEN523972 1-HARRINGTON GEN #2 24 KV
FDNS	02ALL_G14_038	0	20SP	G14_038	FROM->TO	POTTER COUNTY INTERCHANGE (WAUK 90343-A) 345/230/13.2KV TRANSFORMER CKT 1	560	560	0.21571	101.2817	GEN523973 1-HARRINGTON GEN #3 24 KV
FDNS	02ALL_G14_038	0	20SP	G14_038	FROM->TO	POTTER COUNTY INTERCHANGE (WAUK 90343-A) 345/230/13.2KV TRANSFORMER CKT 1	560	560	0.21571	101.2812	GEN523971 1-HARRINGTON GEN #1 24 KV
FDNS	02ALL_G14_038	0	20SP	G14_038	FROM->TO	POTTER COUNTY INTERCHANGE (WAUK 90343-A) 345/230/13.2KV TRANSFORMER CKT 1	560	560	0.24707	101.276	SPP-SWPS-05
FDNS	02ALL_G14_038	0	20SP	G14_038	FROM->TO	POTTER COUNTY INTERCHANGE (WAUK 90343-A) 345/230/13.2KV TRANSFORMER CKT 1	560	560	0.23539	100.2471	G11-14T 345.00 - WOODWARD DISTRICT EHV 345KV CKT 1
FDNS	02ALL_G14_038	0	20SP	G14_038	FROM->TO	POTTER COUNTY INTERCHANGE (WAUK 90343-A) 345/230/13.2KV TRANSFORMER CKT 1	560	560	0.23539	100.2471	G11-14T 345.00 - WOODWARD DISTRICT EHV 345KV CKT 2
FDNS	02ALL_G14_038	2	15G	G14_038	FROM->TO	FPL SWITCH - MOORELAND 138KV CKT 1	287	287	0.0539	108.8403	BASE CASE
FDNS	02ALL_G14_038	2	15G	G14_038	TO->FROM	FPL SWITCH - WOODWARD 138KV CKT 1	287	287	0.0539	102.8283	BASE CASE
FDNS	02ALL_G14_038	2	20SP	G14_038	FROM->TO	POTTER COUNTY INTERCHANGE (WAUK 90343-A) 345/230/13.2KV TRANSFORMER CKT 1	560	560	0.21398	104.3735	GEN525561 1-TOLK GEN #1 24 KV
FDNS	02ALL_G14_038	2	20SP	G14_038	FROM->TO	POTTER COUNTY INTERCHANGE (WAUK 90343-A) 345/230/13.2KV TRANSFORMER CKT 1	560	560	0.21398	102.5398	GEN525562 1-TOLK GEN #2 24 KV
FDNS	02ALL_G14_038	2	20SP	G14_038	FROM->TO	POTTER COUNTY INTERCHANGE (WAUK 90343-A) 345/230/13.2KV TRANSFORMER CKT 1	560	560	0.21398	102.3132	GEN525561 1-TOLK GEN #1 24 KV
FDNS	02ALL_G14_038	2	20SP	G14_038	FROM->TO	POTTER COUNTY INTERCHANGE (WAUK 90343-A) 345/230/13.2KV TRANSFORMER CKT 1	560	560	0.22602	102.2906	HITCHLAND INTERCHANGE - MOORE COUNTY INTERCHANGE 230KV CKT 1
FDNS	02ALL_G14_038	2	20SP	G14_038	FROM->TO	POTTER COUNTY INTERCHANGE (WAUK 90343-A) 345/230/13.2KV TRANSFORMER CKT 1	560	560	0.22602	102.2906	HITCHLAND INTERCHANGE - MOORE COUNTY INTERCHANGE 230KV CKT 1
FDNS	02ALL_G14_038	2	20SP	G14_038	FROM->TO	POTTER COUNTY INTERCHANGE (WAUK 90343-A) 345/230/13.2KV TRANSFORMER CKT 1	560	560	0.24705	101.4313	Hitchland Interchange - WALKTAP7 345.00 345KV CKT 1
FDNS	02ALL_G14_038	2	20SP	G14_038	FROM->TO	POTTER COUNTY INTERCHANGE (WAUK 90343-A) 345/230/13.2KV TRANSFORMER CKT 1	560	560	0.21398	100.585	GEN525562 1-TOLK GEN #2 24 KV
FDNS	02ALL_G14_038	2	20SP	G14_038	FROM->TO	POTTER COUNTY INTERCHANGE (WAUK 90343-A) 345/230/13.2KV TRANSFORMER CKT 1	560	560	0.22602	100.1753	HITCHLAND INTERCHANGE - MOORE COUNTY INTERCHANGE 230KV CKT 1
FDNS	02ALL_G14_038	2	20SP	G14_038	FROM->TO	POTTER COUNTY INTERCHANGE (WAUK 90343-A) 345/230/13.2KV TRANSFORMER CKT 1	560	560	0.22602	100.1753	HITCHLAND INTERCHANGE - MOORE COUNTY INTERCHANGE 230KV CKT 1
FDNS	02ALL_G14_038	2	20SP	G14_038	FROM->TO	POTTER COUNTY INTERCHANGE (WAUK 90343-A) 345/230/13.2KV TRANSFORMER CKT 1	560	560	0.21398	99.8	GEN523971 1-HARRINGTON GEN #1 24 KV
FDNS	02ALL_G14_038	2	20SP	G14_038	FROM->TO	POTTER COUNTY INTERCHANGE (WAUK 90343-A) 345/230/13.2KV TRANSFORMER CKT 1	560	560	0.21398	99.8	GEN523972 1-HARRINGTON GEN #2 24 KV
FDNS	02ALL_G14_038	2	20SP	G14_038	FROM->TO	POTTER COUNTY INTERCHANGE (WAUK 90343-A) 345/230/13.2KV TRANSFORMER CKT 1	560	560	0.21398	99.8	GEN523973 1-HARRINGTON GEN #3 24 KV
FDNS	02ALL_G14_038	3	15G	G14_038	FROM->TO	FPL SWITCH - MOORELAND 138KV CKT 1	287	287	0.05481	110.1794	BASE CASE
FDNS	02ALL_G14_038	3	15G	G14_038	TO->FROM	FPL SWITCH - WOODWARD 138KV CKT 1	287	287	0.05481	104.1616	BASE CASE
FDNS	00NR_G14_046	0	25SP	G14_046	TO->FROM	CARLSBAD INTERCHANGE - PECOS INTERCHANGE 115KV CKT 1	141	141	0.07559	117.9121	HOBBS - KIOWA 7345.00 345KV CKT 1
FDNS	06NR_G14_046	0	15G	G14_046	TO->FROM	CARLSBAD INTERCHANGE - PECOS INTERCHANGE 115KV CKT 1	141	141	0.08421	100.7713	POTASH JUNCTION INTERCHANGE (GE M100747) 230/115/13.2KV TRANSFORMER CKT 1
FDNS	00NR_G14_046	0	15SP	G14_046	FROM->TO	CHAVES COUNTY INTERCHANGE - SAMSON SUB 115KV CKT 1	120	154	0.17126	106.7183	CHAVES COUNTY INTERCHANGE - URTON SUB 115KV CKT 1
FDNS	00NR_G14_046	0	15SP	G14_046	FROM->TO	CHAVES COUNTY INTERCHANGE - URTON SUB 115KV CKT 1	159	160	0.17089	103.7302	CHAVES COUNTY INTERCHANGE - SAMSON SUB 115KV CKT 1
FDNS	06NR_G14_046	0	15G	G14_046	FROM->TO	POTASH JUNCTION INTERCHANGE (GE M100747) 230/115/13.2KV TRANSFORMER CKT 1	150	150	0.05651	106.8262	CARLSBAD INTERCHANGE - PECOS INTERCHANGE 115KV CKT 1
FDNS	06NR_G14_046	0	15G	G14_046	FROM->TO	POTASH JUNCTION INTERCHANGE (GE M100747) 230/115/13.2KV TRANSFORMER CKT 1	150	150	0.05651	102.5664	CARLSBAD INTERCHANGE - PECOS INTERCHANGE 115KV CKT 1
FDNS	00NR_G14_059	0	15SP	G14_059	FROM->TO	G14-059T 230.00 - OGALLALA 230KV CKT 1	320	320	0.83828	125.1059	KEYSTONE - SIDNEY 345KV CKT 1

SOLUTION	GROUP	SCENARIO	SEASON	SOURCE	DIRECTION	MONITORED ELEMENT	RATEA (MVA)	RATEB(MVA)	TDF	TC%LOADING (% MVA)	CONTINGENCY
FDNS	09NR_G14_059	0	15G	G14_059	FROM->TO	G14-059T 230.00 - OGALLALA 230KV CKT 1	320	320	0.8386	125.0772	KEYSTONE - SIDNEY 345KV CKT 1
FDNS	09ALL_G14_059	0	15G	G14_059	FROM->TO	G14-059T 230.00 - OGALLALA 230KV CKT 1	320	320	0.8177	123.3034	KEYSTONE - SIDNEY 345KV CKT 1
FDNS	09ALL_G14_059	0	15SP	G14_059	FROM->TO	G14-059T 230.00 - OGALLALA 230KV CKT 1	320	320	0.81869	119.9768	KEYSTONE - SIDNEY 345KV CKT 1
FDNSLock	00NR_G14_059	0	25SP	G14_059	FROM->TO	G14-059T 230.00 - OGALLALA 230KV CKT 1	320	320	0.83659	119.8454	KEYSTONE - SIDNEY 345KV CKT 1
FDNSLock	00NR_G14_059	0	15WP	G14_059	FROM->TO	G14-059T 230.00 - OGALLALA 230KV CKT 1	320	320	0.83623	118.3356	KEYSTONE - SIDNEY 345KV CKT 1
FDNS	00NR_G14_059	0	20SP	G14_059	FROM->TO	G14-059T 230.00 - OGALLALA 230KV CKT 1	320	320	0.83771	117.5654	KEYSTONE - SIDNEY 345KV CKT 1
FDNS	09ALL_G14_059	0	25SP	G14_059	FROM->TO	G14-059T 230.00 - OGALLALA 230KV CKT 1	320	320	0.82065	114.4593	KEYSTONE - SIDNEY 345KV CKT 1
FDNS	09ALL_G14_059	0	20SP	G14_059	FROM->TO	G14-059T 230.00 - OGALLALA 230KV CKT 1	320	320	0.82061	113.8286	KEYSTONE - SIDNEY 345KV CKT 1
FDNS	00NR_G14_059	0	20WP	G14_059	FROM->TO	G14-059T 230.00 - OGALLALA 230KV CKT 1	320	320	0.83661	113.7713	KEYSTONE - SIDNEY 345KV CKT 1
FDNS	09ALL_G14_059	0	15WP	G14_059	FROM->TO	G14-059T 230.00 - OGALLALA 230KV CKT 1	320	320	0.81822	113.6625	KEYSTONE - SIDNEY 345KV CKT 1
FDNS	09ALL_G14_059	0	20WP	G14_059	FROM->TO	G14-059T 230.00 - OGALLALA 230KV CKT 1	320	320	0.82066	110.1020	KEYSTONE - SIDNEY 345KV CKT 1
FDNS	09ALL	0	15G	G14_059	FROM->TO	GGS	1635	1635	0.79998	104.9857	BASE CASE
FDNS	09ALL	0	15WP	G14_059	FROM->TO	GGS	1635	1635	0.79956	102.7627	BASE CASE
FDNS	09ALL	0	15G	G14_059	FROM->TO	REDWILLMINGO	468	468	0.26096	101.0842	BASE CASE
FDNS	00NR_G14_059	0	15WP	G14_059	FROM->TO	VICTORY HILL (VICTORYHL T1) 230/115/13.8KV TRANSFORMER CKT 1	187	187	0.03485	105.2549	STEGALL - WAYSIDE 230KV CKT 1
FDNS	00NR_G14_059	0	15WP	G14_059	FROM->TO	VICTORY HILL (VICTORYHL T1) 230/115/13.8KV TRANSFORMER CKT 1	187	187	0.03485	104.6970	STEGALL - WAYSIDE 230KV CKT 1
FDNS	06ALL_G14_065	0	25SP	G14_065	TO->FROM	OCHOA SUB - PNDEROSATP 3115.00 115KV CKT 1	141	141	0.33962	141.5441	HOBBS - KIOWA 7345.00 345KV CKT 1
FDNS	06ALL_G14_065	0	25SP	G14_065	TO->FROM	OCHOA SUB - PNDEROSATP 3115.00 115KV CKT 1	141	141	0.30176	124.8051	KIOWA 7345.00 - RDRUNNER 7345.00 345KV CKT 1
FDNS	06ALL_G14_065	0	25SP	G14_065	TO->FROM	OCHOA SUB - PNDEROSATP 3115.00 115KV CKT 1	141	141	0.30176	124.4459	RDRUNNER 7345.00 (UPDATE LATER) 345/115/13.2KV TRANSFORMER CKT 1
FDNS	06ALL_G14_065	0	20SP	G14_065	TO->FROM	OCHOA SUB - PNDEROSATP 3115.00 115KV CKT 1	141	141	0.33963	118.55	HOBBS - KIOWA 7345.00 345KV CKT 1
FDNS	06ALL_G14_065	0	20SP	G14_065	TO->FROM	OCHOA SUB - PNDEROSATP 3115.00 115KV CKT 1	141	141	0.30176	109.9034	KIOWA 7345.00 - RDRUNNER 7345.00 345KV CKT 1
FDNS	06ALL_G14_065	0	20SP	G14_065	TO->FROM	OCHOA SUB - PNDEROSATP 3115.00 115KV CKT 1	141	141	0.30176	109.6127	RDRUNNER 7345.00 (UPDATE LATER) 345/115/13.2KV TRANSFORMER CKT 1
FDNS	06ALL_G14_065	0	25SP	G14_065	TO->FROM	PNDEROSATP 3115.00 - WHITTEN SUB 115KV CKT 1	141	141	0.33962	163.1026	HOBBS - KIOWA 7345.00 345KV CKT 1
FDNS	06ALL_G14_065	0	25SP	G14_065	TO->FROM	PNDEROSATP 3115.00 - WHITTEN SUB 115KV CKT 1	141	141	0.30176	146.3907	KIOWA 7345.00 - RDRUNNER 7345.00 345KV CKT 1
FDNS	06ALL_G14_065	0	25SP	G14_065	TO->FROM	PNDEROSATP 3115.00 - WHITTEN SUB 115KV CKT 1	141	141	0.30176	146.0338	RDRUNNER 7345.00 (UPDATE LATER) 345/115/13.2KV TRANSFORMER CKT 1
FDNS	06ALL_G14_065	0	20SP	G14_065	TO->FROM	PNDEROSATP 3115.00 - WHITTEN SUB 115KV CKT 1	141	141	0.33963	134.7501	HOBBS - KIOWA 7345.00 345KV CKT 1
FDNS	06ALL_G14_065	0	20SP	G14_065	TO->FROM	PNDEROSATP 3115.00 - WHITTEN SUB 115KV CKT 1	141	141	0.30176	126.1385	KIOWA 7345.00 - RDRUNNER 7345.00 345KV CKT 1
FDNS	06ALL_G14_065	0	20SP	G14_065	TO->FROM	PNDEROSATP 3115.00 - WHITTEN SUB 115KV CKT 1	141	141	0.30176	125.85	RDRUNNER 7345.00 (UPDATE LATER) 345/115/13.2KV TRANSFORMER CKT 1
FDNS	06ALL_G14_065	0	25SP	G14_065	TO->FROM	PNDEROSATP 3115.00 - WHITTEN SUB 115KV CKT 1	141	141	0.39468	116.9017	LAGARTO 3115.00 - National Enrichment Plant Tap 115KV CKT 1
FDNS	06ALL_G14_065	0	25SP	G14_065	TO->FROM	PNDEROSATP 3115.00 - WHITTEN SUB 115KV CKT 1	141	141	0.39001	113.8674	HOBBS (UPDATE DATA) 345/230/13.2KV TRANSFORMER CKT 1
FDNS	06ALL_G14_065	0	20WP	G14_065	TO->FROM	PNDEROSATP 3115.00 - WHITTEN SUB 115KV CKT 1	156	156	0.33974	110.1032	HOBBS - KIOWA 7345.00 345KV CKT 1
FDNS	06ALL_G14_065	0	25SP	G14_065	TO->FROM	PNDEROSATP 3115.00 - WHITTEN SUB 115KV CKT 1	141	141	0.39468	109.7558	LAGARTO 3115.00 - SAGE_BRUSH 3115.00 115KV CKT 1
FDNS	06ALL_G14_065	0	25SP	G14_065	TO->FROM	PNDEROSATP 3115.00 - WHITTEN SUB 115KV CKT 1	141	141	0.56505	108.4052	SPP-SWPS-T85
FDNS	06ALL_G14_065	0	25SP	G14_065	TO->FROM	PNDEROSATP 3115.00 - WHITTEN SUB 115KV CKT 1	141	141	0.37618	107.4145	INTREPDW_TP3115.00 - POTASH JUNCTION INTERCHANGE 115KV CKT 1
FDNS	06ALL_G14_065	0	25SP	G14_065	TO->FROM	PNDEROSATP 3115.00 - WHITTEN SUB 115KV CKT 1	141	141	0.37027	107.373	LIVSTNRIDGE3115.00 - WIPP SUB 115KV CKT 1
FDNS	06ALL_G14_065	0	25SP	G14_065	TO->FROM	PNDEROSATP 3115.00 - WHITTEN SUB 115KV CKT 1	141	141	0.36835	106.5465	HOBBS - YOAKUM_345 345.00 345KV CKT 1
FDNS	06ALL_G14_065	0	25SP	G14_065	TO->FROM	PNDEROSATP 3115.00 - WHITTEN SUB 115KV CKT 1	141	141	0.38181	106.4688	DOLLARHIDE SUB - TOBOSOFLATS3115.00 115KV CKT 1
FDNS	06ALL_G14_065	0	20WP	G14_065	TO->FROM	PNDEROSATP 3115.00 - WHITTEN SUB 115KV CKT 1	156	156	0.30185	106.2942	KIOWA 7345.00 - RDRUNNER 7345.00 345KV CKT 1
FDNS	06ALL_G14_065	0	25SP	G14_065	TO->FROM	PNDEROSATP 3115.00 - WHITTEN SUB 115KV CKT 1	141	141	0.38093	106.1167	KIOWA 7345.00 - NLOV_PLT 7345.00 345KV CKT 1
FDNS	06ALL_G14_065	0	25SP	G14_065	TO->FROM	PNDEROSATP 3115.00 - WHITTEN SUB 115KV CKT 1	141	141	0.37618	106.0811	IMC_#1_TP 3115.00 - INTREPDW_TP3115.00 115KV CKT 1
FDNS	06ALL_G14_065	0	25SP	G14_065	TO->FROM	PNDEROSATP 3115.00 - WHITTEN SUB 115KV CKT 1	141	141	0.37027	106.069	SAND DUNES SUB - WIPP SUB 115KV CKT 1
FDNS	06ALL_G14_065	0	20WP	G14_065	TO->FROM	PNDEROSATP 3115.00 - WHITTEN SUB 115KV CKT 1	156	156	0.30185	106.0627	RDRUNNER 7345.00 (UPDATE LATER) 345/115/13.2KV TRANSFORMER CKT 1
FDNS	06ALL_G14_065	0	25SP	G14_065	TO->FROM	PNDEROSATP 3115.00 - WHITTEN SUB 115KV CKT 1	141	141	0.38198	105.4612	CUNNINGHAM STATION - POTASH JUNCTION INTERCHANGE 230KV CKT 1
FDNS	06ALL_G14_065	0	25SP	G14_065	TO->FROM	PNDEROSATP 3115.00 - WHITTEN SUB 115KV CKT 1	141	141	0.37522	105.0841	CHINA_DRAW 3115.00 - WOOD_DRAW 3115.00 115KV CKT 1
FDNS	06ALL_G14_065	0	25SP	G14_065	TO->FROM	PNDEROSATP 3115.00 - WHITTEN SUB 115KV CKT 1	141	141	0.37618	105.0671	IMC_#1_TP 3115.00 - LIVSTNRIDGE3115.00 115KV CKT 1
FDNS	06ALL_G14_065	0	25SP	G14_065	TO->FROM	PNDEROSATP 3115.00 - WHITTEN SUB 115KV CKT 1	141	141	0.38014	105.0175	CHINA_DRAW 7345.00 - NLOV_PLT 7345.00 345KV CKT 1
FDNS	06ALL_G14_065	0	25SP	G14_065	TO->FROM	PNDEROSATP 3115.00 - WHITTEN SUB 115KV CKT 1	141	141	0.38014	104.8608	CHINA_DRAW 7345.00 (UPDATE LATER) 345/115/13.2KV TRANSFORMER CKT 1
FDNS	06ALL_G14_065	0	25SP	G14_065	TO->FROM	PNDEROSATP 3115.00 - WHITTEN SUB 115KV CKT 1	141	141	0.3794	104.4968	POTASH JUNCTION INTERCHANGE (UPDATE LATER) 230/115/13.2KV TRANSFORMER CKT 1
FDNS	06ALL_G14_065	0	25SP	G14_065	TO->FROM	PNDEROSATP 3115.00 - WHITTEN SUB 115KV CKT 1	141	141	0.38235	103.8077	PCA INTERCHANGE - QUAHADA 3115.00 115KV CKT 1
FDNS	06ALL_G14_065	0	25SP	G14_065	TO->FROM	PNDEROSATP 3115.00 - WHITTEN SUB 115KV CKT 1	141	141	0.38215	103.2635	CUNNINGHAM STATION - QUAHADA 3115.00 115KV CKT 1
FDNS	06ALL_G14_065	0	25SP	G14_065	TO->FROM	PNDEROSATP 3115.00 - WHITTEN SUB 115KV CKT 1	141	141	0.38183	102.761	MADDOX STATION - PEARL SUB 115KV CKT 1
FDNS	06ALL_G14_065	0	25SP	G14_065	TO->FROM	PNDEROSATP 3115.00 - WHITTEN SUB 115KV CKT 1	141	141	0.39468	102.7039	LIVSTNRIDGE3115.00 - SAGE_BRUSH 3115.00 115KV CKT 1
FDNS	06ALL_G14_065	0	25SP	G14_065	TO->FROM	PNDEROSATP 3115.00 - WHITTEN SUB 115KV CKT 1	141	141	0.38188	102.42	SPP-SWPS-T14
FDNS	06ALL_G14_065	0	25SP	G14_065	TO->FROM	PNDEROSATP 3115.00 - WHITTEN SUB 115KV CKT 1	141	141	0.38181	102.4188	GEN562637 1-ASGI14_010_213.000
FDNS	06ALL_G14_065	0	25SP	G14_065	TO->FROM	PNDEROSATP 3115.00 - WHITTEN SUB 115KV CKT 1	141	141	0.38181	100.0617	BASE CASE
FDNS	06ALL_G14_065	0	20SP	G14_065	TO->FROM	PNDEROSATP 3115.00 - WHITTEN SUB 115KV CKT 1	141	141	0.39468	99.8	LAGARTO 3115.00 - National Enrichment Plant Tap 115KV CKT 1
FDNS	00NR_G14_068	0	25SP	G14_068	FROM->TO	DEAF SMITH COUNTY INTERCHANGE (LIKE POTTER) 230/115/13.2KV TRANSFORMER CKT 1	250	250	0.18885	101.9764	DEAF SMITH COUNTY INTERCHANGE (LIKE POTTER) 230/115/13.8KV TRANSFORMER CKT 2
FDNS	00NR_G14_074	0	25SP	G14_074	FROM->TO	TUCO INTERCHANGE (ENRCO 136401) 230/115/13.2KV TRANSFORMER CKT 2	250	288	0.06561	107.717	TUCO INTERCHANGE (GE M102345) 230/115/13.2KV TRANSFORMER CKT 1
FDNS	00NR_G14_074	0	25SP	G14_074	FROM->TO	TUCO INTERCHANGE (ENRCO 136401) 230/115/13.2KV TRANSFORMER CKT 2	250	288	0.06561	101.9198	TUCO INTERCHANGE (GE M102345) 230/115/13.2KV TRANSFORMER CKT 1
FDNS	00NR_G14_074	0	25SP	G14_074	FROM->TO	TUCO INTERCHANGE (GE M102345) 230/115/13.2KV TRANSFORMER CKT 1	242	252	0.06693	124.3509	TUCO INTERCHANGE (ENRCO 136401) 230/115/13.2KV TRANSFORMER CKT 2
FDNS	00NR_G14_074	0	25SP	G14_074	FROM->TO	TUCO INTERCHANGE (GE M102345) 230/115/13.2KV TRANSFORMER CKT 1	242	252	0.06693	118.3368	TUCO INTERCHANGE (ENRCO 136401) 230/115/13.2KV TRANSFORMER CKT 2
FDNS	00NR_G14_074	0	20SP	G14_074	FROM->TO	TUCO INTERCHANGE (GE M102345) 230/115/13.2KV TRANSFORMER CKT 1	242	252	0.06698	102.7484	TUCO INTERCHANGE (ENRCO 136401) 230/115/13.2KV TRANSFORMER CKT 2
FDNS	08ALL_G15_003	0	20SP	G15_003	FROM->TO	VIOLA 7 345.00 (VIOLA 1X) 345/138/13.8KV TRANSFORMER CKT 1	448	492.8	0.26969	100.2598	VIOLA 7 345.00 - WICHITA 345KV CKT 1
FDNS	08ALL_G15_003	2	15SP	G15_003	FROM->TO	VIOLA 7 345.00 (VIOLA 1X) 345/138/13.8KV TRANSFORMER CKT 1	448	492.8	0.26859	100.0000	VIOLA 7 345.00 - WICHITA 345KV CKT 1
FDNS	08ALL_G15_003	3	15G	G15_003	FROM->TO	CLEARWATER - GILL ENERGY CENTER WEST 138KV CKT 1	143	143	0.03979	104.5084	BASE CASE
FDNSLock-Blown up	02ALL_G15_006	0	15G	G15_006		Non-Converged Contingency	956	1052	0.21337	-	FINNEY SWITCHING STATION - Hitchland Interchange 345KV CKT 1
FDNSLock-Blown up	02ALL_G15_006	0	15G	G15_006		Non-Converged Contingency	956	1052	0.21337	-	FINNEY SWITCHING STATION - HOLCOMB 345KV CKT 1
FDNSLock-Blown up	02ALL_G15_006	0	15G	G15_006		Non-Converged Contingency	0	0	0.21337	-	SPP-SWPS-05
FDNSLock-Blown up	02ALL_G15_006	2	15G	G15_006		Non-Converged Contingency	956.09	1051.7	0.22504	-	Hitchland Interchange - WALKTAP7 345.00 345KV CKT 1
FDNS	02ALL_G15_006	0	15G	G15_006	FROM->TO	FPL SWITCH - MOORELAND 138KV CKT 1	287	287	0.0645	108.9747	BASE CASE
FDNS	02ALL_G15_006	0	15G	G15_006	TO->FROM	FPL SWITCH - WOODWARD 138KV CKT 1	287	287	0.0645	102.9836	BASE CASE
FDNS	02ALL_G15_006	2	15G	G15_006	FROM->TO	FPL SWITCH - MOORELAND 138KV CKT 1	287	287	0.06399	107.7526	BASE CASE
FDNS	02ALL_G15_006	2	15G	G15_006	TO->FROM	FPL SWITCH - WOODWARD 138KV CKT 1	287	287	0.06399	101.7375	BASE CASE
FDNS	02ALL_G15_006	3	15G	G15_006	FROM->TO	FPL SWITCH - MOORELAND 138KV CKT 1	287	287	0.06516	109.0791	BASE CASE
FDNS	02ALL_G15_006	3	15G	G15_006	TO->FROM	FPL SWITCH - WOODWARD 138KV CKT 1	287	287	0.06516	103.0561	BASE CASE

SOLUTION	GROUP	SCENARIO	SEASON	SOURCE	DIRECTION	MONITORED ELEMENT	RATEA (MVA)	RATEB(MVA)	TDF	TC%LOADING (% MVA)	CONTINGENCY
FDNS	09ALL_G15_008	0	15G	G15_008	FROM->TO	ALBION - GENOA 115KV CKT 1	137	137	0.25168	105.7256	COUNTY LINE - NELIGH.EAST7115.00 115KV CKT 1
FDNS	09ALL_G15_008	0	15G	G15_008	FROM->TO	ALBION - GENOA 115KV CKT 1	137	137	0.25168	105.6801	LN-1163-2
FDNS	09ALL_G15_008	0	15G	G15_008	FROM->TO	ALBION - GENOA 115KV CKT 1	137	137	0.25168	105.5604	BATTLE CREEK - COUNTY LINE 115KV CKT 1
FDNS	09ALL_G15_008	0	15G	G15_008	FROM->TO	ALBION - GENOA 115KV CKT 1	137	137	0.25168	104.0470	BATTLE CREEK - NORTH NORFOLK 115KV CKT 1
FDNS	09ALL_G15_008	0	15G	G15_008	TO->FROM	ALBION - PETERSBURG 115KV CKT 1	137	137	0.37877	153.7784	LN-1163-2
FDNS	09ALL_G15_008	0	15G	G15_008	TO->FROM	ALBION - PETERSBURG 115KV CKT 1	137	137	0.37877	153.7545	COUNTY LINE - NELIGH.EAST7115.00 115KV CKT 1
FDNS	09ALL_G15_008	0	15G	G15_008	TO->FROM	ALBION - PETERSBURG 115KV CKT 1	137	137	0.37877	153.5026	BATTLE CREEK - COUNTY LINE 115KV CKT 1
FDNS	09ALL_G15_008	0	15WP	G15_008	TO->FROM	ALBION - PETERSBURG 115KV CKT 1	137	137	0.37878	152.4071	LN-1163-2
FDNS	09ALL_G15_008	0	15WP	G15_008	TO->FROM	ALBION - PETERSBURG 115KV CKT 1	137	137	0.37878	152.3154	COUNTY LINE - NELIGH.EAST7115.00 115KV CKT 1
FDNS	09ALL_G15_008	0	15WP	G15_008	TO->FROM	ALBION - PETERSBURG 115KV CKT 1	137	137	0.37878	152.1589	BATTLE CREEK - COUNTY LINE 115KV CKT 1
FDNS	09ALL_G15_008	0	15G	G15_008	TO->FROM	ALBION - PETERSBURG 115KV CKT 1	137	137	0.37877	151.2769	BATTLE CREEK - NORTH NORFOLK 115KV CKT 1
FDNS	09ALL_G15_008	0	15SP	G15_008	TO->FROM	ALBION - PETERSBURG 115KV CKT 1	137	137	0.37888	148.4878	LN-1163-2
FDNS	09ALL_G15_008	0	15SP	G15_008	TO->FROM	ALBION - PETERSBURG 115KV CKT 1	137	137	0.37888	148.4490	COUNTY LINE - NELIGH.EAST7115.00 115KV CKT 1
FDNS	09ALL_G15_008	0	15WP	G15_008	TO->FROM	ALBION - PETERSBURG 115KV CKT 1	137	137	0.37878	147.6394	BATTLE CREEK - NORTH NORFOLK 115KV CKT 1
FDNS	09ALL_G15_008	0	15SP	G15_008	TO->FROM	ALBION - PETERSBURG 115KV CKT 1	137	137	0.37888	146.7160	BATTLE CREEK - COUNTY LINE 115KV CKT 1
FDNS	09ALL_G15_008	0	15SP	G15_008	TO->FROM	ALBION - PETERSBURG 115KV CKT 1	137	137	0.37888	137.9732	BATTLE CREEK - NORTH NORFOLK 115KV CKT 1
FDNS	09NR_G15_008	0	15G	G15_008	TO->FROM	ALBION - PETERSBURG 115KV CKT 1	137	137	0.38311	130.2259	LN-1163-2
FDNS	09NR_G15_008	0	15G	G15_008	TO->FROM	ALBION - PETERSBURG 115KV CKT 1	137	137	0.38311	130.1442	COUNTY LINE - NELIGH.EAST7115.00 115KV CKT 1
FDNS	09NR_G15_008	0	15G	G15_008	TO->FROM	ALBION - PETERSBURG 115KV CKT 1	137	137	0.38311	130.0031	BATTLE CREEK - COUNTY LINE 115KV CKT 1
FDNS	09NR_G15_008	0	15G	G15_008	TO->FROM	ALBION - PETERSBURG 115KV CKT 1	137	137	0.38311	128.0991	BATTLE CREEK - NORTH NORFOLK 115KV CKT 1
FDNS	09ALL_G15_008	0	15G	G15_008	TO->FROM	ALBION - PETERSBURG 115KV CKT 1	137	137	0.27085	125.5442	BLOOMFIELD - GAVINS POINT 115KV CKT 1
FDNS	09ALL_G15_008	0	15WP	G15_008	TO->FROM	ALBION - PETERSBURG 115KV CKT 1	137	137	0.27094	125.3155	BLOOMFIELD - GAVINS POINT 115KV CKT 1
FDNS	09ALL_G15_008	0	15SP	G15_008	TO->FROM	ALBION - PETERSBURG 115KV CKT 1	137	137	0.27103	123.7227	BLOOMFIELD - GAVINS POINT 115KV CKT 1
FDNS	09ALL_G15_008	0	15SP	G15_008	TO->FROM	ALBION - PETERSBURG 115KV CKT 1	137	137	0.27464	117.0911	LN-1164
FDNS	09ALL_G15_008	0	15SP	G15_008	TO->FROM	ALBION - PETERSBURG 115KV CKT 1	137	137	0.27464	117.0035	CLEARWATER - NELIGH 115KV CKT 1
FDNS	09ALL_G15_008	0	15SP	G15_008	TO->FROM	ALBION - PETERSBURG 115KV CKT 1	137	137	0.27103	115.8835	CREIGHTON - NELIGH.EAST7115.00 115KV CKT 1
FDNS	09ALL_G15_008	0	15SP	G15_008	TO->FROM	ALBION - PETERSBURG 115KV CKT 1	137	137	0.22291	115.3832	KELLY - MEADOWGROVE4230.00 230KV CKT 1
FDNS	09ALL_G15_008	0	15SP	G15_008	TO->FROM	ALBION - PETERSBURG 115KV CKT 1	137	137	0.22344	114.7415	GRPRAR1-LNX3345.00 - HOLT.CO3 345.00 345KV CKT 1
FDNS	09ALL_G15_008	0	15SP	G15_008	TO->FROM	ALBION - PETERSBURG 115KV CKT 1	137	137	0.22344	114.7395	GRPRAR1-LNX3345.00 - YANKTON 345KV CKT Z
FDNS	09ALL_G15_008	0	15SP	G15_008	TO->FROM	ALBION - PETERSBURG 115KV CKT 1	137	137	0.22344	114.7092	GRAND ISLAND - HOLT.CO3 345.00 345KV CKT 1
FDNS	09ALL_G15_008	0	15SP	G15_008	TO->FROM	ALBION - PETERSBURG 115KV CKT 1	137	137	0.27464	114.5434	CLEARWATER - ONEILL 115KV CKT 1
FDNS	09ALL_G15_008	0	15SP	G15_008	TO->FROM	ALBION - PETERSBURG 115KV CKT 1	137	137	0.2163	114.0338	BROKEN BOW - LOUP CITY 115KV CKT 1
FDNS	09ALL_G15_008	0	15WP	G15_008	TO->FROM	ALBION - PETERSBURG 115KV CKT 1	137	137	0.27094	111.6546	CREIGHTON - NELIGH.EAST7115.00 115KV CKT 1
FDNS	09ALL_G15_008	0	15WP	G15_008	TO->FROM	ALBION - PETERSBURG 115KV CKT 1	137	137	0.27452	111.1974	LN-1164
FDNS	09ALL_G15_008	0	15WP	G15_008	TO->FROM	ALBION - PETERSBURG 115KV CKT 1	137	137	0.27452	111.1809	CLEARWATER - NELIGH 115KV CKT 1
FDNS	09ALL_G15_008	0	15SP	G15_008	TO->FROM	ALBION - PETERSBURG 115KV CKT 1	137	137	0.22222	111.0917	GEN640010 1-GERALD GENTLEMAN STATION UNIT 1
FDNS	09ALL_G15_008	0	15SP	G15_008	TO->FROM	ALBION - PETERSBURG 115KV CKT 1	137	137	0.22222	111.0193	GEN640011 2-GERALD GENTLEMAN STATION UNIT 2
FDNS	09ALL_G15_008	0	15SP	G15_008	TO->FROM	ALBION - PETERSBURG 115KV CKT 1	137	137	0.23099	110.6775	GAVINS POINT - YANKON JCT 115KV CKT 1
FDNS	09ALL_G15_008	0	15WP	G15_008	TO->FROM	ALBION - PETERSBURG 115KV CKT 1	137	137	0.27452	110.6567	CLEARWATER - ONEILL 115KV CKT 1
FDNS	09ALL_G15_008	0	15SP	G15_008	TO->FROM	ALBION - PETERSBURG 115KV CKT 1	137	137	0.22222	110.5009	GEN640428 1-BRKNBW.GEN1W0.6900
FDNS	09ALL_G15_008	0	15SP	G15_008	TO->FROM	ALBION - PETERSBURG 115KV CKT 1	137	137	0.2241	110.4242	NEB02WAPAB2
FDNS	09ALL_G15_008	0	15SP	G15_008	TO->FROM	ALBION - PETERSBURG 115KV CKT 1	137	137	0.22222	110.3048	GEN640449 W-BRKNBW.GEN2W0.6900
FDNS	09ALL_G15_008	0	15G	G15_008	TO->FROM	ALBION - PETERSBURG 115KV CKT 1	137	137	0.27085	110.0669	CREIGHTON - NELIGH.EAST7115.00 115KV CKT 1
FDNS	09ALL_G15_008	0	15SP	G15_008	TO->FROM	ALBION - PETERSBURG 115KV CKT 1	137	137	0.2241	109.7638	GAVINS POINT - HARTINGTON 115KV CKT 1
FDNS	09ALL_G15_008	0	15SP	G15_008	TO->FROM	ALBION - PETERSBURG 115KV CKT 1	137	137	0.22406	109.6318	GAVINS POINT - SPIRIT MOUND 115KV CKT 1
FDNS	09ALL_G15_008	0	15G	G15_008	TO->FROM	ALBION - PETERSBURG 115KV CKT 1	137	137	0.2744	109.5697	LN-1164
FDNS	09ALL_G15_008	0	15G	G15_008	TO->FROM	ALBION - PETERSBURG 115KV CKT 1	137	137	0.2744	109.5583	CLEARWATER - NELIGH 115KV CKT 1
FDNS	09ALL_G15_008	0	15G	G15_008	TO->FROM	ALBION - PETERSBURG 115KV CKT 1	137	137	0.2744	109.1462	CLEARWATER - ONEILL 115KV CKT 1
FDNS	09ALL_G15_008	0	15WP	G15_008	TO->FROM	ALBION - PETERSBURG 115KV CKT 1	137	137	0.21621	109.0257	BROKEN BOW - LOUP CITY 115KV CKT 1
FDNS	09ALL_G15_008	0	15WP	G15_008	TO->FROM	ALBION - PETERSBURG 115KV CKT 1	137	137	0.22279	107.9396	KELLY - MEADOWGROVE4230.00 230KV CKT 1
FDNS	09ALL_G15_008	0	15SP	G15_008	TO->FROM	ALBION - PETERSBURG 115KV CKT 1	137	137	0.22222	107.4908	NUCOR-1
FDNS	09ALL_G15_008	0	15SP	G15_008	TO->FROM	ALBION - PETERSBURG 115KV CKT 1	137	137	0.22222	107.4675	BASE CASE
FDNS	09ALL_G15_008	0	15WP	G15_008	TO->FROM	ALBION - PETERSBURG 115KV CKT 1	137	137	0.27094	107.4139	BLOOMFIELD - CREIGHTON 115KV CKT 1
FDNS	09ALL_G15_008	0	15G	G15_008	TO->FROM	ALBION - PETERSBURG 115KV CKT 1	137	137	0.27085	107.0867	BLOOMFIELD - CREIGHTON 115KV CKT 1
FDNS	09ALL_G15_008	0	15WP	G15_008	TO->FROM	ALBION - PETERSBURG 115KV CKT 1	137	137	0.23088	106.0902	GAVINS POINT - YANKON JCT 115KV CKT 1
FDNS	09NR_G15_008	0	15G	G15_008	TO->FROM	ALBION - PETERSBURG 115KV CKT 1	137	137	0.27598	106.0333	BLOOMFIELD - GAVINS POINT 115KV CKT 1
FDNS	09ALL_G15_008	0	15WP	G15_008	TO->FROM	ALBION - PETERSBURG 115KV CKT 1	137	137	0.22329	105.6878	GRPRAR1-LNX3345.00 - HOLT.CO3 345.00 345KV CKT 1
FDNS	09ALL_G15_008	0	15WP	G15_008	TO->FROM	ALBION - PETERSBURG 115KV CKT 1	137	137	0.22329	105.6839	GRPRAR1-LNX3345.00 - YANKTON 345KV CKT Z
FDNS	09ALL_G15_008	0	15G	G15_008	TO->FROM	ALBION - PETERSBURG 115KV CKT 1	137	137	0.22271	105.6753	KELLY - MEADOWGROVE4230.00 230KV CKT 1
FDNS	09ALL_G15_008	0	15WP	G15_008	TO->FROM	ALBION - PETERSBURG 115KV CKT 1	137	137	0.22329	105.6567	GRAND ISLAND - HOLT.CO3 345.00 345KV CKT 1
FDNS	09ALL_G15_008	0	15G	G15_008	TO->FROM	ALBION - PETERSBURG 115KV CKT 1	137	137	0.21621	105.4736	BROKEN BOW - LOUP CITY 115KV CKT 1
FDNS	09ALL_G15_008	0	15SP	G15_008	TO->FROM	ALBION - PETERSBURG 115KV CKT 1	137	137	0.22222	104.8966	GEN659111 2-LELAND OLDS UNIT2
FDNS	09ALL_G15_008	0	15SP	G15_008	TO->FROM	ALBION - PETERSBURG 115KV CKT 1	137	137	0.21105	104.7592	NELIGH - NELIGH.EAST7115.00 115KV CKT 1
FDNS	09ALL_G15_008	0	15G	G15_008	TO->FROM	ALBION - PETERSBURG 115KV CKT 1	137	137	0.24574	104.7518	LN-WAPA6
FDNS	09ALL_G15_008	0	15G	G15_008	TO->FROM	ALBION - PETERSBURG 115KV CKT 1	137	137	0.24574	104.7518	NEB001NPPB2
FDNS	09ALL_G15_008	0	15G	G15_008	TO->FROM	ALBION - PETERSBURG 115KV CKT 1	137	137	0.24574	104.7188	ONEILL - SPENCER 115KV CKT 1
FDNS	09ALL_G15_008	0	15SP	G15_008	TO->FROM	ALBION - PETERSBURG 115KV CKT 1	137	137	0.22222	104.6569	GEN659103 1-ANTELOPE VALLEY UNIT1
FDNS	09ALL_G15_008	0	15SP	G15_008	TO->FROM	ALBION - PETERSBURG 115KV CKT 1	137	137	0.22222	104.6569	GEN659107 2-ANTELOPE VALLEY UNIT2
FDNS	09ALL_G15_008	0	15SP	G15_008	TO->FROM	ALBION - PETERSBURG 115KV CKT 1	137	137	0.22222	104.6443	GEN640421 1-CROFTON HILLS WIND
FDNS	09ALL_G15_008	0	15WP	G15_008	TO->FROM	ALBION - PETERSBURG 115KV CKT 1	137	137	0.24581	104.6241	LN-WAPA6
FDNS	09ALL_G15_008	0	15WP	G15_008	TO->FROM	ALBION - PETERSBURG 115KV CKT 1	137	137	0.24581	104.6241	NEB001NPPB2
FDNS	09ALL_G15_008	0	15WP	G15_008	TO->FROM	ALBION - PETERSBURG 115KV CKT 1	137	137	0.24581	104.5414	ONEILL - SPENCER 115KV CKT 1
FDNS	09ALL_G15_008	0	15G	G15_008	TO->FROM	ALBION - PETERSBURG 115KV CKT 1	137	137	0.22321	104.3958	GRPRAR1-LNX3345.00 - HOLT.CO3 345.00 345KV CKT 1
FDNS	09ALL_G15_008	0	15G	G15_008	TO->FROM	ALBION - PETERSBURG 115KV CKT 1	137	137	0.22321	104.3898	GRPRAR1-LNX3345.00 - YANKTON 345KV CKT Z
FDNS	09ALL_G15_008	0	15G	G15_008	TO->FROM	ALBION - PETERSBURG 115KV CKT 1	137	137	0.24574	104.3585	FT RANDAL - SPENCER 115KV CKT 1

SOLUTION	GROUP	SCENARIO	SEASON	SOURCE	DIRECTION	MONITORED ELEMENT	RATEA (MVA)	RATEB(MVA)	TDF	TC%LOADING (% MVA)	CONTINGENCY
FDNS	09ALL_G15_008	0	15G	G15_008	TO->FROM	ALBION - PETERSBURG 115KV CKT 1	137	137	0.22321	104.3546	GRAND ISLAND - HOLT.CO3 345.00 345KV CKT 1
FDNS	09ALL_G15_008	0	15SP	G15_008	TO->FROM	ALBION - PETERSBURG 115KV CKT 1	137	137	0.22222	104.0973	SPALDING 115KV SWITCHED SHUNT
FDNS	09ALL_G15_008	0	15WP	G15_008	TO->FROM	ALBION - PETERSBURG 115KV CKT 1	137	137	0.2221	104.0583	GEN640010 1-GERALD GENTLEMAN STATION UNIT 1
FDNSLock	09ALL_G15_008	0	15SP	G15_008	TO->FROM	ALBION - PETERSBURG 115KV CKT 1	137	137	0.22222	104.0430	SPALDING 115KV SWITCHED SHUNT
FDNS	09ALL_G15_008	0	15WP	G15_008	TO->FROM	ALBION - PETERSBURG 115KV CKT 1	137	137	0.2221	103.9544	GEN640428 1-BRKNBW.GEN1W0.6900
FDNS	09ALL_G15_008	0	15WP	G15_008	TO->FROM	ALBION - PETERSBURG 115KV CKT 1	137	137	0.2221	103.7536	GEN640449 W-BRKNBW.GEN2W0.6900
FDNS	09ALL_G15_008	0	15WP	G15_008	TO->FROM	ALBION - PETERSBURG 115KV CKT 1	137	137	0.228	103.6651	UTICA - YANKON JCT 115KV CKT 1
FDNS	09ALL_G15_008	0	15WP	G15_008	TO->FROM	ALBION - PETERSBURG 115KV CKT 1	137	137	0.22398	103.6491	NEB02WAPAB2
FDNS	09ALL_G15_008	0	15SP	G15_008	TO->FROM	ALBION - PETERSBURG 115KV CKT 1	137	137	0.2459	103.6248	LN-WAPA6
FDNS	09ALL_G15_008	0	15SP	G15_008	TO->FROM	ALBION - PETERSBURG 115KV CKT 1	137	137	0.2459	103.6248	NEB001NPPB2
FDNS	09ALL_G15_008	0	15WP	G15_008	TO->FROM	ALBION - PETERSBURG 115KV CKT 1	137	137	0.2221	103.6061	GEN640011 2-GERALD GENTLEMAN STATION UNIT 2
FDNS	09ALL_G15_008	0	15WP	G15_008	TO->FROM	ALBION - PETERSBURG 115KV CKT 1	137	137	0.22395	103.5946	GAVINS POINT - SPIRIT MOUND 115KV CKT 1
FDNS	09ALL_G15_008	0	15SP	G15_008	TO->FROM	ALBION - PETERSBURG 115KV CKT 1	137	137	0.20625	103.5765	NELIGH - NELIGH.EAST7115.00 115KV CKT 2
FDNS	09ALL_G15_008	0	15SP	G15_008	TO->FROM	ALBION - PETERSBURG 115KV CKT 1	137	137	0.2459	103.5615	ONEILL - SPENCER 115KV CKT 1
FDNS	09ALL_G15_008	0	15WP	G15_008	TO->FROM	ALBION - PETERSBURG 115KV CKT 1	137	137	0.24581	103.5586	FT RANDAL - SPENCER 115KV CKT 1
FDNS	09ALL_G15_008	0	15G	G15_008	TO->FROM	ALBION - PETERSBURG 115KV CKT 1	137	137	0.23078	103.4349	GAVINS POINT - YANKON JCT 115KV CKT 1
FDNS	09ALL_G15_008	0	15SP	G15_008	TO->FROM	ALBION - PETERSBURG 115KV CKT 1	137	137	0.22222	103.2354	ALBION 115KV SWITCHED SHUNT
FDNSLock	09ALL_G15_008	0	15SP	G15_008	TO->FROM	ALBION - PETERSBURG 115KV CKT 1	137	137	0.22222	103.2109	ALBION 115KV SWITCHED SHUNT
FDNS	09ALL_G15_008	0	15WP	G15_008	TO->FROM	ALBION - PETERSBURG 115KV CKT 1	137	137	0.23366	103.1023	HOSKINS - NORTH NORFOLK 115KV CKT 1
FDNS	09ALL_G15_008	0	15WP	G15_008	TO->FROM	ALBION - PETERSBURG 115KV CKT 1	137	137	0.22398	103.0780	GAVINS POINT - HARTINGTON 115KV CKT 1
FDNS	09ALL_G15_008	0	15SP	G15_008	TO->FROM	ALBION - PETERSBURG 115KV CKT 1	137	137	0.2459	102.7393	FT RANDAL - SPENCER 115KV CKT 1
FDNS	09ALL_G15_008	0	15G	G15_008	TO->FROM	ALBION - PETERSBURG 115KV CKT 1	137	137	0.22791	102.0181	UTICA - YANKON JCT 115KV CKT 1
FDNS	09ALL_G15_008	0	15SP	G15_008	TO->FROM	ALBION - PETERSBURG 115KV CKT 1	137	137	0.22222	102.0103	GEN640418 1-ELKHORN RIDGE WIND
FDNS	09ALL_G15_008	0	15G	G15_008	TO->FROM	ALBION - PETERSBURG 115KV CKT 1	137	137	0.22201	101.9967	GEN640428 1-BRKNBW.GEN1W0.6900
FDNS	09ALL_G15_008	0	15G	G15_008	TO->FROM	ALBION - PETERSBURG 115KV CKT 1	137	137	0.23358	101.8735	HOSKINS - NORTH NORFOLK 115KV CKT 1
FDNS	09ALL_G15_008	0	15G	G15_008	TO->FROM	ALBION - PETERSBURG 115KV CKT 1	137	137	0.22201	101.7987	GEN640449 W-BRKNBW.GEN2W0.6900
FDNS	09ALL_G15_008	0	15G	G15_008	TO->FROM	ALBION - PETERSBURG 115KV CKT 1	137	137	0.22386	101.6438	GAVINS POINT - SPIRIT MOUND 115KV CKT 1
FDNS	09ALL_G15_008	0	15G	G15_008	TO->FROM	ALBION - PETERSBURG 115KV CKT 1	137	137	0.2239	101.2166	NEB02WAPAB2
FDNS	09ALL_G15_008	0	15G	G15_008	TO->FROM	ALBION - PETERSBURG 115KV CKT 1	137	137	0.22566	101.1608	DAK02WAPAB2
FDNS	09ALL_G15_008	0	15WP	G15_008	TO->FROM	ALBION - PETERSBURG 115KV CKT 1	137	137	0.2221	100.8510	BASE CASE
FDNS	09ALL_G15_008	0	15WP	G15_008	TO->FROM	ALBION - PETERSBURG 115KV CKT 1	137	137	0.2221	100.7772	NUCOR-1
FDNS	09ALL_G15_008	0	15G	G15_008	TO->FROM	BATTLE CREEK - COUNTY LINE 115KV CKT 1	240	240	0.5166	119.8471	BLOOMFIELD - GAVINS POINT 115KV CKT 1
FDNS	09ALL_G15_008	0	15G	G15_008	TO->FROM	BATTLE CREEK - COUNTY LINE 115KV CKT 1	240	240	0.52893	116.4639	PETERSBRG.N7115.00 - PETERSBURG 115KV CKT Z1
FDNS	09ALL_G15_008	0	15G	G15_008	TO->FROM	BATTLE CREEK - COUNTY LINE 115KV CKT 1	240	240	0.52893	116.2656	ALBION - PETERSBURG 115KV CKT 1
FDNS	09ALL_G15_008	0	15WP	G15_008	TO->FROM	BATTLE CREEK - COUNTY LINE 115KV CKT 1	240	240	0.51641	115.7549	BLOOMFIELD - GAVINS POINT 115KV CKT 1
FDNS	09ALL_G15_008	0	15WP	G15_008	TO->FROM	BATTLE CREEK - COUNTY LINE 115KV CKT 1	240	240	0.52878	114.6508	PETERSBRG.N7115.00 - PETERSBURG 115KV CKT Z1
FDNS	09ALL_G15_008	0	15WP	G15_008	TO->FROM	BATTLE CREEK - COUNTY LINE 115KV CKT 1	240	240	0.52878	114.2390	ALBION - PETERSBURG 115KV CKT 1
FDNS	09NR_G15_008	0	15G	G15_008	TO->FROM	BATTLE CREEK - COUNTY LINE 115KV CKT 1	240	240	0.51083	102.4990	BLOOMFIELD - GAVINS POINT 115KV CKT 1
FDNS	09ALL_G15_008	0	15G	G15_008	TO->FROM	BATTLE CREEK - COUNTY LINE 115KV CKT 1	240	240	0.47822	101.1921	WAPA-OG-2
FDNS	09ALL_G15_008	0	15G	G15_008	TO->FROM	BATTLE CREEK - COUNTY LINE 115KV CKT 1	240	240	0.5166	99.8000	CREIGHTON - NELIGH.EAST7115.00 115KV CKT 1
FDNS	09NR_G15_008	0	15G	G15_008	TO->FROM	BATTLE CREEK - COUNTY LINE 115KV CKT 1	240	240	0.52782	99.6000	PETERSBRG.N7115.00 - PETERSBURG 115KV CKT Z1
FDNS	09ALL_G15_008	0	15G	G15_008	FROM->TO	BATTLE CREEK - NORTH NORFOLK 115KV CKT 1	193	193	0.5166	145.3343	BLOOMFIELD - GAVINS POINT 115KV CKT 1
FDNS	09ALL_G15_008	0	15G	G15_008	FROM->TO	BATTLE CREEK - NORTH NORFOLK 115KV CKT 1	193	193	0.52893	141.1347	PETERSBRG.N7115.00 - PETERSBURG 115KV CKT Z1
FDNS	09ALL_G15_008	0	15G	G15_008	FROM->TO	BATTLE CREEK - NORTH NORFOLK 115KV CKT 1	193	193	0.52893	140.8888	ALBION - PETERSBURG 115KV CKT 1
FDNS	09ALL_G15_008	0	15WP	G15_008	FROM->TO	BATTLE CREEK - NORTH NORFOLK 115KV CKT 1	193	193	0.51641	135.1112	BLOOMFIELD - GAVINS POINT 115KV CKT 1
FDNS	09ALL_G15_008	0	15WP	G15_008	FROM->TO	BATTLE CREEK - NORTH NORFOLK 115KV CKT 1	193	193	0.52878	133.7457	PETERSBRG.N7115.00 - PETERSBURG 115KV CKT Z1
FDNS	09ALL_G15_008	0	15WP	G15_008	FROM->TO	BATTLE CREEK - NORTH NORFOLK 115KV CKT 1	193	193	0.52878	133.2365	ALBION - PETERSBURG 115KV CKT 1
FDNS	09NR_G15_008	0	15G	G15_008	FROM->TO	BATTLE CREEK - NORTH NORFOLK 115KV CKT 1	193	193	0.51083	123.7840	BLOOMFIELD - GAVINS POINT 115KV CKT 1
FDNS	09ALL_G15_008	0	15G	G15_008	FROM->TO	BATTLE CREEK - NORTH NORFOLK 115KV CKT 1	193	193	0.47822	122.1517	WAPA-OG-2
FDNS	09ALL_G15_008	0	15G	G15_008	FROM->TO	BATTLE CREEK - NORTH NORFOLK 115KV CKT 1	193	193	0.5166	120.3678	CREIGHTON - NELIGH.EAST7115.00 115KV CKT 1
FDNS	09NR_G15_008	0	15G	G15_008	FROM->TO	BATTLE CREEK - NORTH NORFOLK 115KV CKT 1	193	193	0.52782	120.2183	PETERSBRG.N7115.00 - PETERSBURG 115KV CKT Z1
FDNS	09NR_G15_008	0	15G	G15_008	FROM->TO	BATTLE CREEK - NORTH NORFOLK 115KV CKT 1	193	193	0.52782	119.9806	ALBION - PETERSBURG 115KV CKT 1
FDNS	09ALL_G15_008	0	15G	G15_008	FROM->TO	BATTLE CREEK - NORTH NORFOLK 115KV CKT 1	193	193	0.46331	119.8972	ALBION - GENOA 115KV CKT 1
FDNS	09ALL_G15_008	0	15G	G15_008	FROM->TO	BATTLE CREEK - NORTH NORFOLK 115KV CKT 1	193	193	0.46331	118.2918	COLUMBUS - GENOA 115KV CKT 1
FDNS	09ALL_G15_008	0	15G	G15_008	FROM->TO	BATTLE CREEK - NORTH NORFOLK 115KV CKT 1	193	193	0.4638	118.0826	WAPA-OG-1
FDNS	09ALL_G15_008	0	15G	G15_008	FROM->TO	BATTLE CREEK - NORTH NORFOLK 115KV CKT 1	193	193	0.5166	115.7990	BLOOMFIELD - CREIGHTON 115KV CKT 1
FDNS	09ALL_G15_008	0	15G	G15_008	FROM->TO	BATTLE CREEK - NORTH NORFOLK 115KV CKT 1	193	193	0.49032	114.6272	LN-1164
FDNS	09ALL_G15_008	0	15G	G15_008	FROM->TO	BATTLE CREEK - NORTH NORFOLK 115KV CKT 1	193	193	0.49032	114.6127	CLEARWATER - NELIGH 115KV CKT 1
FDNS	09ALL_G15_008	0	15G	G15_008	FROM->TO	BATTLE CREEK - NORTH NORFOLK 115KV CKT 1	193	193	0.49032	114.1528	CLEARWATER - ONEILL 115KV CKT 1
FDNS	09ALL_G15_008	0	15WP	G15_008	FROM->TO	BATTLE CREEK - NORTH NORFOLK 115KV CKT 1	193	193	0.51641	112.9646	CREIGHTON - NELIGH.EAST7115.00 115KV CKT 1
FDNS	09ALL_G15_008	0	15WP	G15_008	FROM->TO	BATTLE CREEK - NORTH NORFOLK 115KV CKT 1	193	193	0.46304	111.3571	ALBION - GENOA 115KV CKT 1
FDNS	09ALL_G15_008	0	15G	G15_008	FROM->TO	BATTLE CREEK - NORTH NORFOLK 115KV CKT 1	193	193	0.45095	109.6526	LN-WAPA6
FDNS	09ALL_G15_008	0	15G	G15_008	FROM->TO	BATTLE CREEK - NORTH NORFOLK 115KV CKT 1	193	193	0.45095	109.6526	NEB001NPPB2
FDNS	09ALL_G15_008	0	15G	G15_008	FROM->TO	BATTLE CREEK - NORTH NORFOLK 115KV CKT 1	193	193	0.45095	109.6309	ONEILL - SPENCER 115KV CKT 1
FDNS	09ALL_G15_008	0	15G	G15_008	FROM->TO	BATTLE CREEK - NORTH NORFOLK 115KV CKT 1	193	193	0.45095	109.2089	FT RANDAL - SPENCER 115KV CKT 1
FDNS	09ALL_G15_008	0	15G	G15_008	FROM->TO	BATTLE CREEK - NORTH NORFOLK 115KV CKT 1	193	193	0.52893	109.1114	NELIGH - PETERSBRG.N7115.00 115KV CKT 1
FDNS	09ALL_G15_008	0	15G	G15_008	FROM->TO	BATTLE CREEK - NORTH NORFOLK 115KV CKT 1	193	193	0.42218	108.2481	GAVINS POINT - HARTINGTON 115KV CKT 1
FDNS	09ALL_G15_008	0	15G	G15_008	FROM->TO	BATTLE CREEK - NORTH NORFOLK 115KV CKT 1	193	193	0.42823	108.0614	GAVINS POINT - YANKON JCT 115KV CKT 1
FDNS	09ALL_G15_008	0	15WP	G15_008	FROM->TO	BATTLE CREEK - NORTH NORFOLK 115KV CKT 1	193	193	0.46304	107.8248	COLUMBUS - GENOA 115KV CKT 1
FDNS	09ALL_G15_008	0	15WP	G15_008	FROM->TO	BATTLE CREEK - NORTH NORFOLK 115KV CKT 1	193	193	0.47793	107.8008	WAPA-OG-2
FDNS	09ALL_G15_008	0	15WP	G15_008	FROM->TO	BATTLE CREEK - NORTH NORFOLK 115KV CKT 1	193	193	0.46354	107.7485	WAPA-OG-1
FDNS	09ALL_G15_008	0	15G	G15_008	FROM->TO	BATTLE CREEK - NORTH NORFOLK 115KV CKT 1	193	193	0.42218	107.6867	NEB02WAPAB2
FDNS	09ALL_G15_008	0	15G	G15_008	FROM->TO	BATTLE CREEK - NORTH NORFOLK 115KV CKT 1	193	193	0.4158	107.4510	KELLY - MEADOWGROVE4230.00 230KV CKT 1
FDNS	09ALL_G15_008	0	15WP	G15_008	FROM->TO	BATTLE CREEK - NORTH NORFOLK 115KV CKT 1	193	193	0.49019	107.4334	LN-1164
FDNS	09ALL_G15_008	0	15WP	G15_008	FROM->TO	BATTLE CREEK - NORTH NORFOLK 115KV CKT 1	193	193	0.49019	107.4111	CLEARWATER - NELIGH 115KV CKT 1

SOLUTION	GROUP	SCENARIO	SEASON	SOURCE	DIRECTION	MONITORED ELEMENT	RATEA (MVA)	RATEB(MVA)	TDF	TC%LOADING (% MVA)	CONTINGENCY
FDNS	09ALL_G15_008	0	15WP	G15_008	FROM->TO	BATTLE CREEK - NORTH NORFOLK 115KV CKT 1	193	193	0.49019	106.8435	CLEARWATER - ONEILL 115KV CKT 1
FDNS	09ALL_G15_008	0	15G	G15_008	FROM->TO	BATTLE CREEK - NORTH NORFOLK 115KV CKT 1	193	193	0.42132	106.6560	DAK02WAPAB2
FDNS	09ALL_G15_008	0	15G	G15_008	FROM->TO	BATTLE CREEK - NORTH NORFOLK 115KV CKT 1	193	193	0.42422	106.5464	UTICA - YANKON JCT 115KV CKT 1
FDNS	09ALL_G15_008	0	15G	G15_008	FROM->TO	BATTLE CREEK - NORTH NORFOLK 115KV CKT 1	193	193	0.42218	106.3897	BELDEN - HARTINGTON 115KV CKT 1
FDNS	09ALL_G15_008	0	15WP	G15_008	FROM->TO	BATTLE CREEK - NORTH NORFOLK 115KV CKT 1	193	193	0.51641	106.1975	BLOOMFIELD - CREIGHTON 115KV CKT 1
FDNS	09ALL_G15_008	0	15G	G15_008	FROM->TO	BATTLE CREEK - NORTH NORFOLK 115KV CKT 1	193	193	0.41805	106.1608	GAVINS POINT - SPIRIT MOUND 115KV CKT 1
FDNS	09ALL_G15_008	0	15G	G15_008	FROM->TO	BATTLE CREEK - NORTH NORFOLK 115KV CKT 1	193	193	0.41519	105.7992	GEN560350 1-G10-51 0.6900
FDNS	09ALL_G15_008	0	15SP	G15_008	FROM->TO	BATTLE CREEK - NORTH NORFOLK 115KV CKT 1	193	193	0.5288	105.7874	PETERSBRG.N7115.00 - PETERSBURG 115KV CKT Z1
FDNS	09ALL_G15_008	0	15G	G15_008	FROM->TO	BATTLE CREEK - NORTH NORFOLK 115KV CKT 1	193	193	0.41519	105.5617	GEN635213 3-NEAL UNIT 3
FDNS	09ALL_G15_008	0	15G	G15_008	FROM->TO	BATTLE CREEK - NORTH NORFOLK 115KV CKT 1	193	193	0.43267	105.5395	ALBION - SPALDING 115KV CKT 1
FDNS	09ALL_G15_008	0	15G	G15_008	FROM->TO	BATTLE CREEK - NORTH NORFOLK 115KV CKT 1	193	193	0.41322	105.3436	DIXONCO 230.00 - HOSKINS 230KV CKT 1
FDNS	09ALL_G15_008	0	15G	G15_008	FROM->TO	BATTLE CREEK - NORTH NORFOLK 115KV CKT 1	193	193	0.41805	105.2287	MANNING - SPIRIT MOUND 115KV CKT 1
FDNS	09ALL_G15_008	0	15G	G15_008	FROM->TO	BATTLE CREEK - NORTH NORFOLK 115KV CKT 1	193	193	0.41989	105.1643	LOUP CITY - ST LIBORY 115KV CKT 1
FDNS	09ALL_G15_008	0	15G	G15_008	FROM->TO	BATTLE CREEK - NORTH NORFOLK 115KV CKT 1	193	193	0.41519	105.1498	GEN635214 4-NEAL UNIT 4
FDNS	09ALL_G15_008	0	15G	G15_008	FROM->TO	BATTLE CREEK - NORTH NORFOLK 115KV CKT 1	193	193	0.43267	104.9325	NORTH LOUP - SPALDING 115KV CKT 1
FDNS	09ALL_G15_008	0	15G	G15_008	FROM->TO	BATTLE CREEK - NORTH NORFOLK 115KV CKT 1	193	193	0.41612	104.9224	FT RANDAL - SIOUX CITY 230KV CKT 1
FDNS	09ALL_G15_008	0	15G	G15_008	FROM->TO	BATTLE CREEK - NORTH NORFOLK 115KV CKT 1	193	193	0.43437	104.8872	NELIGH - NELIGH.EAST7115.00 115KV CKT 2
FDNS	09NR_G15_008	0	15G	G15_008	FROM->TO	BATTLE CREEK - NORTH NORFOLK 115KV CKT 1	193	193	0.51083	104.7965	CREIGHTON - NELIGH.EAST7115.00 115KV CKT 1
FDNS	09ALL_G15_008	0	15G	G15_008	FROM->TO	BATTLE CREEK - NORTH NORFOLK 115KV CKT 1	193	193	0.41571	104.7819	GRPRAR1-LNX3345.00 - HOLT.CO3 345.00 345KV CKT 1
FDNS	09ALL_G15_008	0	15G	G15_008	FROM->TO	BATTLE CREEK - NORTH NORFOLK 115KV CKT 1	193	193	0.41571	104.7813	GRAND ISLAND - HOLT.CO3 345.00 345KV CKT 1
FDNS	09ALL_G15_008	0	15G	G15_008	FROM->TO	BATTLE CREEK - NORTH NORFOLK 115KV CKT 1	193	193	0.41571	104.7766	GRPRAR1-LNX3345.00 - YANKTON 345KV CKT Z
FDNS	09ALL_G15_008	0	15G	G15_008	FROM->TO	BATTLE CREEK - NORTH NORFOLK 115KV CKT 1	193	193	0.41761	104.7716	AINSWORTH - VALENTINE 115KV CKT 1
FDNS	09ALL_G15_008	0	15G	G15_008	FROM->TO	BATTLE CREEK - NORTH NORFOLK 115KV CKT 1	193	193	0.41561	104.7504	GRAND ISLAND - MCCOOL 345KV CKT 1
FDNS	09ALL_G15_008	0	15G	G15_008	FROM->TO	BATTLE CREEK - NORTH NORFOLK 115KV CKT 1	193	193	0.41519	104.7069	GEN562003 1-G11_027_3 0.6900
FDNS	09ALL_G15_008	0	15G	G15_008	FROM->TO	BATTLE CREEK - NORTH NORFOLK 115KV CKT 1	193	193	0.41805	104.6876	BERSFORD - MANNING 115KV CKT 1
FDNS	09ALL_G15_008	0	15G	G15_008	FROM->TO	BATTLE CREEK - NORTH NORFOLK 115KV CKT 1	193	193	0.41531	104.6090	SHELL CREEK (SHELLCREEKT1) 345/230/13.8KV TRANSFORMER CKT 1
FDNS	09ALL_G15_008	0	15G	G15_008	FROM->TO	BATTLE CREEK - NORTH NORFOLK 115KV CKT 1	193	193	0.41531	104.6086	KELLY - SHELL CREEK 230KV CKT 1
FDNS	09ALL_G15_008	0	15SP	G15_008	FROM->TO	BATTLE CREEK - NORTH NORFOLK 115KV CKT 1	193	193	0.5288	104.2896	ALBION - PETERSBURG 115KV CKT 1
FDNS	09NR_G15_008	0	15G	G15_008	FROM->TO	BATTLE CREEK - NORTH NORFOLK 115KV CKT 1	193	193	0.47274	104.2518	WAPA-OG-2
FDNS	09ALL_G15_008	0	15G	G15_008	FROM->TO	BATTLE CREEK - NORTH NORFOLK 115KV CKT 1	193	193	0.41519	102.9665	BASE CASE
FDNS	09NR_G15_008	0	15G	G15_008	FROM->TO	BATTLE CREEK - NORTH NORFOLK 115KV CKT 1	193	193	0.45833	102.6431	ALBION - GENOA 115KV CKT 1
FDNS	09ALL_G15_008	0	15WP	G15_008	FROM->TO	BATTLE CREEK - NORTH NORFOLK 115KV CKT 1	193	193	0.52878	102.6046	NELIGH - PETERSBRG.N7115.00 115KV CKT 1
FDNS	09ALL_G15_008	0	15G	G15_008	FROM->TO	BATTLE CREEK - NORTH NORFOLK 115KV CKT 1	193	193	0.41519	102.4528	NUCOR-1
FDNS	09ALL_G15_008	0	15WP	G15_008	FROM->TO	BATTLE CREEK - NORTH NORFOLK 115KV CKT 1	193	193	0.42198	101.9473	GAVINS POINT - HARTINGTON 115KV CKT 1
FDNS	09ALL_G15_008	0	15WP	G15_008	FROM->TO	BATTLE CREEK - NORTH NORFOLK 115KV CKT 1	193	193	0.42805	101.9031	GAVINS POINT - YANKON JCT 115KV CKT 1
FDNS	09ALL_G15_008	0	15G	G15_008	FROM->TO	BATTLE CREEK - NORTH NORFOLK 115KV CKT 1	193	193	0.41519	101.7099	NUCOR-2
FDNS	09ALL_G15_008	0	15G	G15_008	FROM->TO	BATTLE CREEK - NORTH NORFOLK 115KV CKT 1	193	193	0.4158	101.3087	FT RANDAL - MEADOWGROVE4230.00 230KV CKT 1
FDNS	09ALL_G15_008	0	15G	G15_008	FROM->TO	BATTLE CREEK - NORTH NORFOLK 115KV CKT 1	193	193	0.41492	101.2686	LAKEFIELD 3 - RAUN 345KV CKT 1
FDNS	09ALL_G15_008	0	15G	G15_008	FROM->TO	BATTLE CREEK - NORTH NORFOLK 115KV CKT 1	193	193	0.42554	101.2260	ATKINSON - STUART 115KV CKT 1
FDNS	09ALL_G15_008	0	15G	G15_008	FROM->TO	BATTLE CREEK - NORTH NORFOLK 115KV CKT 1	193	193	0.42554	101.1433	AINSWORTH - STUART 115KV CKT 1
FDNS	09NR_G15_008	0	15G	G15_008	FROM->TO	BATTLE CREEK - NORTH NORFOLK 115KV CKT 1	193	193	0.45833	101.0880	COLUMBUS - GENOA 115KV CKT 1
FDNS	09ALL_G15_008	0	15WP	G15_008	FROM->TO	BATTLE CREEK - NORTH NORFOLK 115KV CKT 1	193	193	0.42198	101.0764	NEB02WAPAB2
FDNS	09ALL_G15_008	0	15G	G15_008	FROM->TO	BATTLE CREEK - NORTH NORFOLK 115KV CKT 1	193	193	0.41761	100.8565	BROKEN BOW - LOUP CITY 115KV CKT 1
FDNS	09ALL_G15_008	0	15G	G15_008	FROM->TO	BATTLE CREEK - NORTH NORFOLK 115KV CKT 1	193	193	0.41587	100.8272	RAUN - SIOUX CITY 345KV CKT 1
FDNS	09NR_G15_008	0	15G	G15_008	FROM->TO	BATTLE CREEK - NORTH NORFOLK 115KV CKT 1	193	193	0.45884	100.8240	WAPA-OG-1
FDNS	09ALL_G15_008	0	15WP	G15_008	FROM->TO	BATTLE CREEK - NORTH NORFOLK 115KV CKT 1	193	193	0.4156	100.6833	KELLY - MEADOWGROVE4230.00 230KV CKT 1
FDNS	09ALL_G15_008	0	15G	G15_008	FROM->TO	BATTLE CREEK - NORTH NORFOLK 115KV CKT 1	193	193	0.41519	100.6084	GEN659118 1-LARAMIE RIVER UNIT1
FDNS	09ALL_G15_008	0	15G	G15_008	FROM->TO	BATTLE CREEK - NORTH NORFOLK 115KV CKT 1	193	193	0.40675	100.5929	NORFOLK - NORTH NORFOLK 115KV CKT 1
FDNS	09ALL_G15_008	0	15G	G15_008	FROM->TO	BATTLE CREEK - NORTH NORFOLK 115KV CKT 1	193	193	0.41235	100.4193	SIOUX CITY - TWIN CHURCH 230KV CKT 1
FDNS	09ALL_G15_008	0	15G	G15_008	FROM->TO	BATTLE CREEK - NORTH NORFOLK 115KV CKT 1	193	193	0.40669	100.3957	HOSKINS - RAUN 345KV CKT 1
FDNS	09ALL_G15_008	0	15G	G15_008	FROM->TO	BATTLE CREEK - NORTH NORFOLK 115KV CKT 1	193	193	0.41519	100.3721	GEN640026 1-AINSWORTH WIND
FDNS	09NR_G15_008	0	15G	G15_008	FROM->TO	BATTLE CREEK - NORTH NORFOLK 115KV CKT 1	193	193	0.51083	100.2486	BLOOMFIELD - CREIGHTON 115KV CKT 1
FDNS	09ALL_G15_008	0	15WP	G15_008	FROM->TO	BATTLE CREEK - NORTH NORFOLK 115KV CKT 1	193	193	0.45074	100.1675	LN-WAPA6
FDNS	09ALL_G15_008	0	15WP	G15_008	FROM->TO	BATTLE CREEK - NORTH NORFOLK 115KV CKT 1	193	193	0.45074	100.1675	NEB001NPPB2
FDNS	09ALL_G15_008	0	15WP	G15_008	FROM->TO	BATTLE CREEK - NORTH NORFOLK 115KV CKT 1	193	193	0.45074	100.1113	ONEILL - SPENCER 115KV CKT 1
FDNS	09ALL_G15_008	0	15G	G15_008	FROM->TO	BLOOMFIELD - GAVINS POINT 115KV CKT 1	120	120	0.33801	185.9551	COUNTY LINE - NELIGH.EAST7115.00 115KV CKT 1
FDNS	09ALL_G15_008	0	15G	G15_008	FROM->TO	BLOOMFIELD - GAVINS POINT 115KV CKT 1	120	120	0.33801	185.8835	LN-1163-2
FDNS	09ALL_G15_008	0	15G	G15_008	FROM->TO	BLOOMFIELD - GAVINS POINT 115KV CKT 1	120	120	0.33801	185.6920	BATTLE CREEK - COUNTY LINE 115KV CKT 1
FDNS	09ALL_G15_008	0	15G	G15_008	FROM->TO	BLOOMFIELD - GAVINS POINT 115KV CKT 1	120	120	0.33801	183.3911	BATTLE CREEK - NORTH NORFOLK 115KV CKT 1
FDNS	09ALL_G15_008	0	15WP	G15_008	FROM->TO	BLOOMFIELD - GAVINS POINT 115KV CKT 1	120	120	0.33794	173.0668	COUNTY LINE - NELIGH.EAST7115.00 115KV CKT 1
FDNS	09ALL_G15_008	0	15WP	G15_008	FROM->TO	BLOOMFIELD - GAVINS POINT 115KV CKT 1	120	120	0.33794	172.9549	LN-1163-2
FDNS	09ALL_G15_008	0	15WP	G15_008	FROM->TO	BLOOMFIELD - GAVINS POINT 115KV CKT 1	120	120	0.33794	172.8830	BATTLE CREEK - COUNTY LINE 115KV CKT 1
FDNS	09ALL_G15_008	0	15WP	G15_008	FROM->TO	BLOOMFIELD - GAVINS POINT 115KV CKT 1	120	120	0.33794	167.8222	BATTLE CREEK - NORTH NORFOLK 115KV CKT 1
FDNS	09NR_G15_008	0	15G	G15_008	FROM->TO	BLOOMFIELD - GAVINS POINT 115KV CKT 1	120	120	0.33347	154.0333	COUNTY LINE - NELIGH.EAST7115.00 115KV CKT 1
FDNS	09NR_G15_008	0	15G	G15_008	FROM->TO	BLOOMFIELD - GAVINS POINT 115KV CKT 1	120	120	0.33347	153.9461	LN-1163-2
FDNS	09NR_G15_008	0	15G	G15_008	FROM->TO	BLOOMFIELD - GAVINS POINT 115KV CKT 1	120	120	0.33347	153.8147	BATTLE CREEK - COUNTY LINE 115KV CKT 1
FDNS	09ALL_G15_008	0	15G	G15_008	FROM->TO	BLOOMFIELD - GAVINS POINT 115KV CKT 1	120	120	0.24457	153.3562	PETERSBRG.N7115.00 - PETERSBURG 115KV CKT Z1
FDNS	09ALL_G15_008	0	15G	G15_008	FROM->TO	BLOOMFIELD - GAVINS POINT 115KV CKT 1	120	120	0.24457	153.1770	ALBION - PETERSBURG 115KV CKT 1
FDNS	09NR_G15_008	0	15G	G15_008	FROM->TO	BLOOMFIELD - GAVINS POINT 115KV CKT 1	120	120	0.33347	151.7380	BATTLE CREEK - NORTH NORFOLK 115KV CKT 1
FDNS	09ALL_G15_008	0	15WP	G15_008	FROM->TO	BLOOMFIELD - GAVINS POINT 115KV CKT 1	120	120	0.24458	142.9533	PETERSBRG.N7115.00 - PETERSBURG 115KV CKT Z1
FDNS	09ALL_G15_008	0	15WP	G15_008	FROM->TO	BLOOMFIELD - GAVINS POINT 115KV CKT 1	120	120	0.24458	142.5848	ALBION - PETERSBURG 115KV CKT 1
FDNS	09ALL_G15_008	0	15G	G15_008	FROM->TO	BLOOMFIELD - GAVINS POINT 115KV CKT 1	120	120	0.21464	137.8740	ALBION - GENOA 115KV CKT 1
FDNS	09ALL_G15_008	0	15G	G15_008	FROM->TO	BLOOMFIELD - GAVINS POINT 115KV CKT 1	120	120	0.21673	137.7881	WAPA-OG-2
FDNS	09ALL_G15_008	0	15G	G15_008	FROM->TO	BLOOMFIELD - GAVINS POINT 115KV CKT 1	120	120	0.21448	136.8739	WAPA-OG-1
FDNS	09ALL_G15_008	0	15G	G15_008	FROM->TO	BLOOMFIELD - GAVINS POINT 115KV CKT 1	120	120	0.21464	136.7501	COLUMBUS - GENOA 115KV CKT 1

SOLUTION	GROUP	SCENARIO	SEASON	SOURCE	DIRECTION	MONITORED ELEMENT	RATEA (MVA)	RATEB(MVA)	TDF	TC%LOADING (% MVA)	CONTINGENCY
FDNS	09ALL_G15_008	0	15G	G15_008	FROM->TO	BLOOMFIELD - GAVINS POINT 115KV CKT 1	120	120	0.23528	136.3079	CLEARWATER - NELIGH 115KV CKT 1
FDNS	09ALL_G15_008	0	15G	G15_008	FROM->TO	BLOOMFIELD - GAVINS POINT 115KV CKT 1	120	120	0.23528	136.2736	LN-1164
FDNS	09ALL_G15_008	0	15G	G15_008	FROM->TO	BLOOMFIELD - GAVINS POINT 115KV CKT 1	120	120	0.23528	135.9037	CLEARWATER - ONEILL 115KV CKT 1
FDNS	09ALL_G15_008	0	15G	G15_008	FROM->TO	BLOOMFIELD - GAVINS POINT 115KV CKT 1	120	120	0.21542	132.6589	ONEILL - SPENCER 115KV CKT 1
FDNS	09ALL_G15_008	0	15G	G15_008	FROM->TO	BLOOMFIELD - GAVINS POINT 115KV CKT 1	120	120	0.21542	132.5911	LN-WAPA6
FDNS	09ALL_G15_008	0	15G	G15_008	FROM->TO	BLOOMFIELD - GAVINS POINT 115KV CKT 1	120	120	0.21542	132.5911	NEB001NPPB2
FDNS	09ALL_G15_008	0	15G	G15_008	FROM->TO	BLOOMFIELD - GAVINS POINT 115KV CKT 1	120	120	0.21542	132.2855	FT RANDAL - SPENCER 115KV CKT 1
FDNS	09ALL_G15_008	0	15G	G15_008	FROM->TO	BLOOMFIELD - GAVINS POINT 115KV CKT 1	120	120	0.24457	130.7948	NELIGH - PETERSBRG.N7115.00 115KV CKT 1
FDNS	09ALL_G15_008	0	15G	G15_008	FROM->TO	BLOOMFIELD - GAVINS POINT 115KV CKT 1	120	120	0.20636	130.3828	HOSKINS - NORTH NORFOLK 115KV CKT 1
FDNS	09ALL_G15_008	0	15WP	G15_008	FROM->TO	BLOOMFIELD - GAVINS POINT 115KV CKT 1	120	120	0.2146	127.9864	ALBION - GENOA 115KV CKT 1
FDNS	09ALL_G15_008	0	15WP	G15_008	FROM->TO	BLOOMFIELD - GAVINS POINT 115KV CKT 1	120	120	0.23529	127.4953	CLEARWATER - NELIGH 115KV CKT 1
FDNS	09ALL_G15_008	0	15WP	G15_008	FROM->TO	BLOOMFIELD - GAVINS POINT 115KV CKT 1	120	120	0.23529	127.4384	LN-1164
FDNS	09ALL_G15_008	0	15WP	G15_008	FROM->TO	BLOOMFIELD - GAVINS POINT 115KV CKT 1	120	120	0.23529	127.0286	CLEARWATER - ONEILL 115KV CKT 1
FDNS	09ALL_G15_008	0	15G	G15_008	FROM->TO	BLOOMFIELD - GAVINS POINT 115KV CKT 1	120	120	0.19437	126.9375	BASE CASE
FDNS	09ALL_G15_008	0	15WP	G15_008	FROM->TO	BLOOMFIELD - GAVINS POINT 115KV CKT 1	120	120	0.21444	125.8235	WAPA-OG-1
FDNS	09ALL_G15_008	0	15WP	G15_008	FROM->TO	BLOOMFIELD - GAVINS POINT 115KV CKT 1	120	120	0.2146	125.7817	COLUMBUS - GENOA 115KV CKT 1
FDNS	09ALL_G15_008	0	15WP	G15_008	FROM->TO	BLOOMFIELD - GAVINS POINT 115KV CKT 1	120	120	0.21668	125.7650	WAPA-OG-2
FDNS	09NR_G15_008	0	15G	G15_008	FROM->TO	BLOOMFIELD - GAVINS POINT 115KV CKT 1	120	120	0.24279	125.7536	PETERSBRG.N7115.00 - PETERSBURG 115KV CKT Z1
FDNS	09NR_G15_008	0	15G	G15_008	FROM->TO	BLOOMFIELD - GAVINS POINT 115KV CKT 1	120	120	0.24279	125.5845	ALBION - PETERSBURG 115KV CKT 1
FDNS	09ALL_G15_008	0	15SP	G15_008	FROM->TO	BLOOMFIELD - GAVINS POINT 115KV CKT 1	120	120	0.33784	123.3786	COUNTY LINE - NELIGH.EAST7115.00 115KV CKT 1
FDNS	09ALL_G15_008	0	15SP	G15_008	FROM->TO	BLOOMFIELD - GAVINS POINT 115KV CKT 1	120	120	0.33784	123.0397	LN-1163-2
FDNS	09ALL_G15_008	0	15WP	G15_008	FROM->TO	BLOOMFIELD - GAVINS POINT 115KV CKT 1	120	120	0.24458	122.5848	NELIGH - PETERSBRG.N7115.00 115KV CKT 1
FDNS	09ALL_G15_008	0	15WP	G15_008	FROM->TO	BLOOMFIELD - GAVINS POINT 115KV CKT 1	120	120	0.21539	121.9871	ONEILL - SPENCER 115KV CKT 1
FDNS	09ALL_G15_008	0	15WP	G15_008	FROM->TO	BLOOMFIELD - GAVINS POINT 115KV CKT 1	120	120	0.21539	121.8225	LN-WAPA6
FDNS	09ALL_G15_008	0	15WP	G15_008	FROM->TO	BLOOMFIELD - GAVINS POINT 115KV CKT 1	120	120	0.21539	121.8225	NEB001NPPB2
FDNS	09ALL_G15_008	0	15SP	G15_008	FROM->TO	BLOOMFIELD - GAVINS POINT 115KV CKT 1	120	120	0.33784	121.4287	BATTLE CREEK - COUNTY LINE 115KV CKT 1
FDNS	09ALL_G15_008	0	15WP	G15_008	FROM->TO	BLOOMFIELD - GAVINS POINT 115KV CKT 1	120	120	0.21539	121.0131	FT RANDAL - SPENCER 115KV CKT 1
FDNS	09ALL_G15_008	0	15WP	G15_008	FROM->TO	BLOOMFIELD - GAVINS POINT 115KV CKT 1	120	120	0.20634	120.9575	HOSKINS - NORTH NORFOLK 115KV CKT 1
FDNS	09ALL_G15_008	0	15WP	G15_008	FROM->TO	BLOOMFIELD - GAVINS POINT 115KV CKT 1	120	120	0.19436	118.3155	BASE CASE
FDNS	09NR_G15_008	0	15G	G15_008	FROM->TO	BLOOMFIELD - GAVINS POINT 115KV CKT 1	120	120	0.21118	114.0198	ALBION - GENOA 115KV CKT 1
FDNS	09NR_G15_008	0	15G	G15_008	FROM->TO	BLOOMFIELD - GAVINS POINT 115KV CKT 1	120	120	0.21319	113.6031	WAPA-OG-2
FDNS	09NR_G15_008	0	15G	G15_008	FROM->TO	BLOOMFIELD - GAVINS POINT 115KV CKT 1	120	120	0.21101	113.1836	WAPA-OG-1
FDNS	09NR_G15_008	0	15G	G15_008	FROM->TO	BLOOMFIELD - GAVINS POINT 115KV CKT 1	120	120	0.21118	113.0467	COLUMBUS - GENOA 115KV CKT 1
FDNS	09NR_G15_008	0	15G	G15_008	FROM->TO	BLOOMFIELD - GAVINS POINT 115KV CKT 1	120	120	0.2325	112.9947	CLEARWATER - NELIGH 115KV CKT 1
FDNS	09NR_G15_008	0	15G	G15_008	FROM->TO	BLOOMFIELD - GAVINS POINT 115KV CKT 1	120	120	0.2325	112.9439	LN-1164
FDNS	09NR_G15_008	0	15G	G15_008	FROM->TO	BLOOMFIELD - GAVINS POINT 115KV CKT 1	120	120	0.2325	112.6321	CLEARWATER - ONEILL 115KV CKT 1
FDNS	09ALL_G15_008	0	15SP	G15_008	FROM->TO	BLOOMFIELD - GAVINS POINT 115KV CKT 1	120	120	0.33784	112.1625	BATTLE CREEK - NORTH NORFOLK 115KV CKT 1
FDNS	09NR_G15_008	0	15G	G15_008	FROM->TO	BLOOMFIELD - GAVINS POINT 115KV CKT 1	120	120	0.21146	109.7025	ONEILL - SPENCER 115KV CKT 1
FDNS	09NR_G15_008	0	15G	G15_008	FROM->TO	BLOOMFIELD - GAVINS POINT 115KV CKT 1	120	120	0.21146	109.6422	LN-WAPA6
FDNS	09NR_G15_008	0	15G	G15_008	FROM->TO	BLOOMFIELD - GAVINS POINT 115KV CKT 1	120	120	0.21146	109.6422	NEB001NPPB2
FDNS	09NR_G15_008	0	15G	G15_008	FROM->TO	BLOOMFIELD - GAVINS POINT 115KV CKT 1	120	120	0.19108	109.5734	FT RANDAL - UTICA JCT 230KV CKT 1
FDNS	09NR_G15_008	0	15G	G15_008	FROM->TO	BLOOMFIELD - GAVINS POINT 115KV CKT 1	120	120	0.24279	109.3717	NELIGH - PETERSBRG.N7115.00 115KV CKT 1
FDNS	09NR_G15_008	0	15G	G15_008	FROM->TO	BLOOMFIELD - GAVINS POINT 115KV CKT 1	120	120	0.21146	109.3368	FT RANDAL - SPENCER 115KV CKT 1
FDNS	09NR_G15_008	0	15G	G15_008	FROM->TO	BLOOMFIELD - GAVINS POINT 115KV CKT 1	120	120	0.19214	109.0823	DIXONCO 230.00 - TWIN CHURCH 230KV CKT 1
FDNS	09NR_G15_008	0	15G	G15_008	FROM->TO	BLOOMFIELD - GAVINS POINT 115KV CKT 1	120	120	0.19127	108.4692	GEN652575 1-GAVINS POINT
FDNS	09NR_G15_008	0	15G	G15_008	FROM->TO	BLOOMFIELD - GAVINS POINT 115KV CKT 1	120	120	0.19127	108.4692	GEN652576 2-GAVINS POINT
FDNS	09NR_G15_008	0	15G	G15_008	FROM->TO	BLOOMFIELD - GAVINS POINT 115KV CKT 1	120	120	0.1879	108.3532	FT RANDAL - WHITE SWAN 115KV CKT 1
FDNS	09NR_G15_008	0	15G	G15_008	FROM->TO	BLOOMFIELD - GAVINS POINT 115KV CKT 1	120	120	0.19065	108.1577	RAUN - SIOUX CITY 345KV CKT 1
FDNS	09NR_G15_008	0	15G	G15_008	FROM->TO	BLOOMFIELD - GAVINS POINT 115KV CKT 1	120	120	0.20303	108.1386	HOSKINS - NORTH NORFOLK 115KV CKT 1
FDNSLock	09NR_G15_008	0	15G	G15_008	FROM->TO	BLOOMFIELD - GAVINS POINT 115KV CKT 1	120	120	0.19127	108.0485	GEN659103 1-ANTELOPE VALLEY UNIT1
FDNSLock	09NR_G15_008	0	15G	G15_008	FROM->TO	BLOOMFIELD - GAVINS POINT 115KV CKT 1	120	120	0.19127	108.0485	GEN659107 2-ANTELOPE VALLEY UNIT2
FDNS	09NR_G15_008	0	15G	G15_008	FROM->TO	BLOOMFIELD - GAVINS POINT 115KV CKT 1	120	120	0.1879	108.0370	TYNDALL - WHITE SWAN 115KV CKT 1
FDNS	09NR_G15_008	0	15G	G15_008	FROM->TO	BLOOMFIELD - GAVINS POINT 115KV CKT 1	120	120	0.19127	107.8116	GEN659111 2-LELAND OLDS UNIT2
FDNS	09ALL_G15_008	0	15SP	G15_008	FROM->TO	BLOOMFIELD - GAVINS POINT 115KV CKT 1	120	120	0.24453	106.6866	PETERSBRG.N7115.00 - PETERSBURG 115KV CKT Z1
FDNS	09ALL_G15_008	0	15SP	G15_008	FROM->TO	BLOOMFIELD - GAVINS POINT 115KV CKT 1	120	120	0.24453	105.6131	ALBION - PETERSBURG 115KV CKT 1
FDNS	09NR_G15_008	0	15G	G15_008	FROM->TO	BLOOMFIELD - GAVINS POINT 115KV CKT 1	120	120	0.19127	105.3157	BASE CASE
FDNS	09NR_G15_008	0	15G	G15_008	FROM->TO	BLOOMFIELD - GAVINS POINT 115KV CKT 1	120	120	0.1803	102.5029	DAK02WAPAB2
FDNS	09NR_G15_008	0	15G	G15_008	FROM->TO	BLOOMFIELD - GAVINS POINT 115KV CKT 1	120	120	0.18028	102.3447	UTICA JCT (UJ KV3A) 230/115/13.2KV TRANSFORMER CKT 1
FDNS	09NR_G15_008	0	15G	G15_008	FROM->TO	BLOOMFIELD - GAVINS POINT 115KV CKT 1	120	120	0.19127	102.2323	GEN645062 W-TPWPBG1W 0.6900
FDNS	09NR_G15_008	0	15G	G15_008	FROM->TO	BLOOMFIELD - GAVINS POINT 115KV CKT 1	120	120	0.19003	102.1924	GRAND ISLAND - HOLT.CO3 345.00 345KV CKT 1
FDNS	09NR_G15_008	0	15G	G15_008	FROM->TO	BLOOMFIELD - GAVINS POINT 115KV CKT 1	120	120	0.19003	102.1917	GRPRAR1-LNX3345.00 - YANKTON 345KV CKT Z
FDNS	09NR_G15_008	0	15G	G15_008	FROM->TO	BLOOMFIELD - GAVINS POINT 115KV CKT 1	120	120	0.19003	102.1850	GRPRAR1-LNX3345.00 - HOLT.CO3 345.00 345KV CKT 1
FDNS	09NR_G15_008	0	15G	G15_008	FROM->TO	BLOOMFIELD - GAVINS POINT 115KV CKT 1	120	120	0.18576	100.8011	BERSFORD - MANNING 115KV CKT 1
FDNS	09NR_G15_008	0	15G	G15_008	FROM->TO	BLOOMFIELD - GAVINS POINT 115KV CKT 1	120	120	0.19063	100.5605	KELLY - MEADOWGROVE4230.00 230KV CKT 1
FDNS	09NR_G15_008	0	15G	G15_008	FROM->TO	BLOOMFIELD - GAVINS POINT 115KV CKT 1	120	120	0.18233	99.6000	BELDEN - HARTINGTON 115KV CKT 1
FDNS	09ALL_G15_008	0	15G	G15_008	TO->FROM	COLUMBUS - GENOA 115KV CKT 1	137	137	0.25168	100.2041	COUNTY LINE - NELIGH.EAST7115.00 115KV CKT 1
FDNS	09ALL_G15_008	0	15G	G15_008	TO->FROM	COLUMBUS - GENOA 115KV CKT 1	137	137	0.25168	100.1600	LN-1163-2
FDNS	09ALL_G15_008	0	15G	G15_008	TO->FROM	COLUMBUS - GENOA 115KV CKT 1	137	137	0.25168	100.0000	BATTLE CREEK - COUNTY LINE 115KV CKT 1
FDNS	09ALL_G15_008	0	15G	G15_008	TO->FROM	COUNTY LINE - NELIGH.EAST7115.00 115KV CKT 1	240	240	0.5166	120.1472	BLOOMFIELD - GAVINS POINT 115KV CKT 1
FDNS	09ALL_G15_008	0	15G	G15_008	TO->FROM	COUNTY LINE - NELIGH.EAST7115.00 115KV CKT 1	240	240	0.52893	116.7683	PETERSBRG.N7115.00 - PETERSBURG 115KV CKT Z1
FDNS	09ALL_G15_008	0	15G	G15_008	TO->FROM	COUNTY LINE - NELIGH.EAST7115.00 115KV CKT 1	240	240	0.52893	116.5701	ALBION - PETERSBURG 115KV CKT 1
FDNS	09ALL_G15_008	0	15WP	G15_008	TO->FROM	COUNTY LINE - NELIGH.EAST7115.00 115KV CKT 1	240	240	0.51641	116.0126	BLOOMFIELD - GAVINS POINT 115KV CKT 1
FDNS	09ALL_G15_008	0	15WP	G15_008	TO->FROM	COUNTY LINE - NELIGH.EAST7115.00 115KV CKT 1	240	240	0.52878	114.9115	PETERSBRG.N7115.00 - PETERSBURG 115KV CKT Z1
FDNS	09ALL_G15_008	0	15WP	G15_008	TO->FROM	COUNTY LINE - NELIGH.EAST7115.00 115KV CKT 1	240	240	0.52878	114.4996	ALBION - PETERSBURG 115KV CKT 1
FDNS	09NR_G15_008	0	15G	G15_008	TO->FROM	COUNTY LINE - NELIGH.EAST7115.00 115KV CKT 1	240	240	0.51083	102.8029	BLOOMFIELD - GAVINS POINT 115KV CKT 1

SOLUTION	GROUP	SCENARIO	SEASON	SOURCE	DIRECTION	MONITORED ELEMENT	RATEA (MVA)	RATEB(MVA)	TDF	TC%LOADING (% MVA)	CONTINGENCY
FDNS	09ALL_G15_008	0	15G	G15_008	TO->FROM	COUNTY LINE - NELIGH.EAST7115.00 115KV CKT 1	240	240	0.47822	101.4951	WAPA-OG-2
FDNS	09ALL_G15_008	0	15SP	G15_008	TO->FROM	COUNTY LINE - NELIGH.EAST7115.00 115KV CKT 1	240	240	0.5288	100.5169	PETERSBRG.N7115.00 - PETERSBURG 115KV CKT Z1
FDNS	09ALL_G15_008	0	15G	G15_008	TO->FROM	COUNTY LINE - NELIGH.EAST7115.00 115KV CKT 1	240	240	0.5166	100.0599	CREIGHTON - NELIGH.EAST7115.00 115KV CKT 1
FDNS	09NR_G15_008	0	15G	G15_008	TO->FROM	COUNTY LINE - NELIGH.EAST7115.00 115KV CKT 1	240	240	0.52782	99.9000	PETERSBRG.N7115.00 - PETERSBURG 115KV CKT Z1
FDNS	09NR_G15_008	0	15G	G15_008	TO->FROM	COUNTY LINE - NELIGH.EAST7115.00 115KV CKT 1	240	240	0.52782	99.7000	ALBION - PETERSBURG 115KV CKT 1
FDNS	09ALL_G15_008	0	15G	G15_008	TO->FROM	COUNTY LINE - NELIGH.EAST7115.00 115KV CKT 1	240	240	0.46331	99.7000	ALBION - GENOA 115KV CKT 1
FDNS	09ALL_G15_008	0	15G	G15_008	TO->FROM	NORFOLK - NORTH NORFOLK 115KV CKT 1	120	120	0.38229	134.8461	HOSKINS - NORTH NORFOLK 115KV CKT 1
FDNS	09NR_G15_008	0	15G	G15_008	TO->FROM	NORFOLK - NORTH NORFOLK 115KV CKT 1	120	120	0.37875	113.5987	HOSKINS - NORTH NORFOLK 115KV CKT 1
FDNS	09ALL_G15_008	0	15WP	G15_008	TO->FROM	NORFOLK - NORTH NORFOLK 115KV CKT 1	120	120	0.38212	113.4522	HOSKINS - NORTH NORFOLK 115KV CKT 1
FDNS	09ALL_G15_008	0	15G	G15_008	FROM->TO	PETERSBRG.N7115.00 - PETERSBURG 115KV CKT Z1	137	137	0.37877	154.4047	LN-1163-2
FDNS	09ALL_G15_008	0	15G	G15_008	FROM->TO	PETERSBRG.N7115.00 - PETERSBURG 115KV CKT Z1	137	137	0.37877	154.3809	COUNTY LINE - NELIGH.EAST7115.00 115KV CKT 1
FDNS	09ALL_G15_008	0	15G	G15_008	FROM->TO	PETERSBRG.N7115.00 - PETERSBURG 115KV CKT Z1	137	137	0.37877	154.1288	BATTLE CREEK - COUNTY LINE 115KV CKT 1
FDNS	09ALL_G15_008	0	15WP	G15_008	FROM->TO	PETERSBRG.N7115.00 - PETERSBURG 115KV CKT Z1	137	137	0.37878	153.7224	LN-1163-2
FDNS	09ALL_G15_008	0	15WP	G15_008	FROM->TO	PETERSBRG.N7115.00 - PETERSBURG 115KV CKT Z1	137	137	0.37878	153.6304	COUNTY LINE - NELIGH.EAST7115.00 115KV CKT 1
FDNS	09ALL_G15_008	0	15WP	G15_008	FROM->TO	PETERSBRG.N7115.00 - PETERSBURG 115KV CKT Z1	137	137	0.37878	153.4739	BATTLE CREEK - COUNTY LINE 115KV CKT 1
FDNS	09ALL_G15_008	0	15SP	G15_008	FROM->TO	PETERSBRG.N7115.00 - PETERSBURG 115KV CKT Z1	137	137	0.37888	152.2486	LN-1163-2
FDNS	09ALL_G15_008	0	15SP	G15_008	FROM->TO	PETERSBRG.N7115.00 - PETERSBURG 115KV CKT Z1	137	137	0.37888	152.2050	COUNTY LINE - NELIGH.EAST7115.00 115KV CKT 1
FDNS	09ALL_G15_008	0	15G	G15_008	FROM->TO	PETERSBRG.N7115.00 - PETERSBURG 115KV CKT Z1	137	137	0.37877	151.9017	BATTLE CREEK - NORTH NORFOLK 115KV CKT 1
FDNS	09ALL_G15_008	0	15SP	G15_008	FROM->TO	PETERSBRG.N7115.00 - PETERSBURG 115KV CKT Z1	137	137	0.37888	150.4641	BATTLE CREEK - COUNTY LINE 115KV CKT 1
FDNS	09ALL_G15_008	0	15WP	G15_008	FROM->TO	PETERSBRG.N7115.00 - PETERSBURG 115KV CKT Z1	137	137	0.37878	148.9517	BATTLE CREEK - NORTH NORFOLK 115KV CKT 1
FDNS	09ALL_G15_008	0	15SP	G15_008	FROM->TO	PETERSBRG.N7115.00 - PETERSBURG 115KV CKT Z1	137	137	0.37888	141.6919	BATTLE CREEK - NORTH NORFOLK 115KV CKT 1
FDNS	09NR_G15_008	0	15G	G15_008	FROM->TO	PETERSBRG.N7115.00 - PETERSBURG 115KV CKT Z1	137	137	0.38311	130.8419	LN-1163-2
FDNS	09NR_G15_008	0	15G	G15_008	FROM->TO	PETERSBRG.N7115.00 - PETERSBURG 115KV CKT Z1	137	137	0.38311	130.7598	COUNTY LINE - NELIGH.EAST7115.00 115KV CKT 1
FDNS	09NR_G15_008	0	15G	G15_008	FROM->TO	PETERSBRG.N7115.00 - PETERSBURG 115KV CKT Z1	137	137	0.38311	130.6191	BATTLE CREEK - COUNTY LINE 115KV CKT 1
FDNS	09NR_G15_008	0	15G	G15_008	FROM->TO	PETERSBRG.N7115.00 - PETERSBURG 115KV CKT Z1	137	137	0.38311	128.7145	BATTLE CREEK - NORTH NORFOLK 115KV CKT 1
FDNS	09ALL_G15_008	0	15SP	G15_008	FROM->TO	PETERSBRG.N7115.00 - PETERSBURG 115KV CKT Z1	137	137	0.27103	127.3914	BLOOMFIELD - GAVINS POINT 115KV CKT 1
FDNS	09ALL_G15_008	0	15WP	G15_008	FROM->TO	PETERSBRG.N7115.00 - PETERSBURG 115KV CKT Z1	137	137	0.27094	126.6140	BLOOMFIELD - GAVINS POINT 115KV CKT 1
FDNS	09ALL_G15_008	0	15G	G15_008	FROM->TO	PETERSBRG.N7115.00 - PETERSBURG 115KV CKT Z1	137	137	0.27085	126.1592	BLOOMFIELD - GAVINS POINT 115KV CKT 1
FDNS	09ALL_G15_008	0	15SP	G15_008	FROM->TO	PETERSBRG.N7115.00 - PETERSBURG 115KV CKT Z1	137	137	0.27464	120.7284	LN-1164
FDNS	09ALL_G15_008	0	15SP	G15_008	FROM->TO	PETERSBRG.N7115.00 - PETERSBURG 115KV CKT Z1	137	137	0.27464	120.6399	CLEARWATER - NELIGH 115KV CKT 1
FDNS	09ALL_G15_008	0	15SP	G15_008	FROM->TO	PETERSBRG.N7115.00 - PETERSBURG 115KV CKT Z1	137	137	0.27103	119.5173	CREIGHTON - NELIGH.EAST7115.00 115KV CKT 1
FDNS	09ALL_G15_008	0	15SP	G15_008	FROM->TO	PETERSBRG.N7115.00 - PETERSBURG 115KV CKT Z1	137	137	0.22291	119.0202	KELLY - MEADOWGROVE4230.00 230KV CKT 1
FDNS	09ALL_G15_008	0	15SP	G15_008	FROM->TO	PETERSBRG.N7115.00 - PETERSBURG 115KV CKT Z1	137	137	0.22344	118.3615	GRPRAR1-LNX3345.00 - HOLT.CO3 345.00 345KV CKT 1
FDNS	09ALL_G15_008	0	15SP	G15_008	FROM->TO	PETERSBRG.N7115.00 - PETERSBURG 115KV CKT Z1	137	137	0.22344	118.3600	GRPRAR1-LNX3345.00 - YANKTON 345KV CKT Z
FDNS	09ALL_G15_008	0	15SP	G15_008	FROM->TO	PETERSBRG.N7115.00 - PETERSBURG 115KV CKT Z1	137	137	0.22344	118.3325	GRAND ISLAND - HOLT.CO3 345.00 345KV CKT 1
FDNS	09ALL_G15_008	0	15SP	G15_008	FROM->TO	PETERSBRG.N7115.00 - PETERSBURG 115KV CKT Z1	137	137	0.27464	118.1693	CLEARWATER - ONEILL 115KV CKT 1
FDNS	09ALL_G15_008	0	15SP	G15_008	FROM->TO	PETERSBRG.N7115.00 - PETERSBURG 115KV CKT Z1	137	137	0.2163	117.6812	BROKEN BOW - LOUP CITY 115KV CKT 1
FDNS	09ALL_G15_008	0	15SP	G15_008	FROM->TO	PETERSBRG.N7115.00 - PETERSBURG 115KV CKT Z1	137	137	0.22222	114.6842	GEN640010 1-GERALD GENTLEMAN STATION UNIT 1
FDNS	09ALL_G15_008	0	15SP	G15_008	FROM->TO	PETERSBRG.N7115.00 - PETERSBURG 115KV CKT Z1	137	137	0.22222	114.6101	GEN640011 2-GERALD GENTLEMAN STATION UNIT 2
FDNS	09ALL_G15_008	0	15SP	G15_008	FROM->TO	PETERSBRG.N7115.00 - PETERSBURG 115KV CKT Z1	137	137	0.23099	114.2868	GAVINS POINT - YANKON JCT 115KV CKT 1
FDNS	09ALL_G15_008	0	15SP	G15_008	FROM->TO	PETERSBRG.N7115.00 - PETERSBURG 115KV CKT Z1	137	137	0.22222	114.1105	GEN640428 1-BRKNBW.GEN1W0.6900
FDNS	09ALL_G15_008	0	15SP	G15_008	FROM->TO	PETERSBRG.N7115.00 - PETERSBURG 115KV CKT Z1	137	137	0.2241	114.0323	NEB02WAPAB2
FDNS	09ALL_G15_008	0	15SP	G15_008	FROM->TO	PETERSBRG.N7115.00 - PETERSBURG 115KV CKT Z1	137	137	0.22222	113.9103	GEN640449 W-BRKNBW.GEN2W0.6900
FDNS	09ALL_G15_008	0	15SP	G15_008	FROM->TO	PETERSBRG.N7115.00 - PETERSBURG 115KV CKT Z1	137	137	0.2241	113.3739	GAVINS POINT - HARTINGTON 115KV CKT 1
FDNS	09ALL_G15_008	0	15SP	G15_008	FROM->TO	PETERSBRG.N7115.00 - PETERSBURG 115KV CKT Z1	137	137	0.22406	113.2375	GAVINS POINT - SPIRIT MOUND 115KV CKT 1
FDNS	09ALL_G15_008	0	15WP	G15_008	FROM->TO	PETERSBRG.N7115.00 - PETERSBURG 115KV CKT Z1	137	137	0.27094	112.9440	CREIGHTON - NELIGH.EAST7115.00 115KV CKT 1
FDNS	09ALL_G15_008	0	15WP	G15_008	FROM->TO	PETERSBRG.N7115.00 - PETERSBURG 115KV CKT Z1	137	137	0.27452	112.4864	LN-1164
FDNS	09ALL_G15_008	0	15WP	G15_008	FROM->TO	PETERSBRG.N7115.00 - PETERSBURG 115KV CKT Z1	137	137	0.27452	112.4699	CLEARWATER - NELIGH 115KV CKT 1
FDNS	09ALL_G15_008	0	15WP	G15_008	FROM->TO	PETERSBRG.N7115.00 - PETERSBURG 115KV CKT Z1	137	137	0.27452	111.9452	CLEARWATER - ONEILL 115KV CKT 1
FDNS	09ALL_G15_008	0	15SP	G15_008	FROM->TO	PETERSBRG.N7115.00 - PETERSBURG 115KV CKT Z1	137	137	0.22222	111.0808	NUCOR-1
FDNS	09ALL_G15_008	0	15SP	G15_008	FROM->TO	PETERSBRG.N7115.00 - PETERSBURG 115KV CKT Z1	137	137	0.22222	111.0622	BASE CASE
FDNS	09ALL_G15_008	0	15G	G15_008	FROM->TO	PETERSBRG.N7115.00 - PETERSBURG 115KV CKT Z1	137	137	0.27085	110.6767	CREIGHTON - NELIGH.EAST7115.00 115KV CKT 1
FDNS	09ALL_G15_008	0	15WP	G15_008	FROM->TO	PETERSBRG.N7115.00 - PETERSBURG 115KV CKT Z1	137	137	0.21621	110.3062	BROKEN BOW - LOUP CITY 115KV CKT 1
FDNS	09ALL_G15_008	0	15G	G15_008	FROM->TO	PETERSBRG.N7115.00 - PETERSBURG 115KV CKT Z1	137	137	0.2744	110.1786	LN-1164
FDNS	09ALL_G15_008	0	15G	G15_008	FROM->TO	PETERSBRG.N7115.00 - PETERSBURG 115KV CKT Z1	137	137	0.2744	110.1673	CLEARWATER - NELIGH 115KV CKT 1
FDNS	09ALL_G15_008	0	15G	G15_008	FROM->TO	PETERSBRG.N7115.00 - PETERSBURG 115KV CKT Z1	137	137	0.2744	109.7550	CLEARWATER - ONEILL 115KV CKT 1
FDNS	09ALL_G15_008	0	15WP	G15_008	FROM->TO	PETERSBRG.N7115.00 - PETERSBURG 115KV CKT Z1	137	137	0.22279	109.2289	KELLY - MEADOWGROVE4230.00 230KV CKT 1
FDNS	09ALL_G15_008	0	15WP	G15_008	FROM->TO	PETERSBRG.N7115.00 - PETERSBURG 115KV CKT Z1	137	137	0.27094	108.7002	BLOOMFIELD - CREIGHTON 115KV CKT 1
FDNS	09ALL_G15_008	0	15SP	G15_008	FROM->TO	PETERSBRG.N7115.00 - PETERSBURG 115KV CKT Z1	137	137	0.22222	108.4726	GEN659111 2-LELAND OLDS UNIT2
FDNS	09ALL_G15_008	0	15SP	G15_008	FROM->TO	PETERSBRG.N7115.00 - PETERSBURG 115KV CKT Z1	137	137	0.21105	108.3421	NELIGH - NELIGH.EAST7115.00 115KV CKT 1
FDNS	09ALL_G15_008	0	15SP	G15_008	FROM->TO	PETERSBRG.N7115.00 - PETERSBURG 115KV CKT Z1	137	137	0.22222	108.2313	GEN659103 1-ANTELOPE VALLEY UNIT1
FDNS	09ALL_G15_008	0	15SP	G15_008	FROM->TO	PETERSBRG.N7115.00 - PETERSBURG 115KV CKT Z1	137	137	0.22222	108.2313	GEN659107 2-ANTELOPE VALLEY UNIT2
FDNS	09ALL_G15_008	0	15SP	G15_008	FROM->TO	PETERSBRG.N7115.00 - PETERSBURG 115KV CKT Z1	137	137	0.22222	108.2248	GEN640421 1-CROFTON HILLS WIND
FDNS	09ALL_G15_008	0	15SP	G15_008	FROM->TO	PETERSBRG.N7115.00 - PETERSBURG 115KV CKT Z1	137	137	0.22222	107.9204	SPALDING 115KV SWITCHED SHUNT
FDNSLock	09ALL_G15_008	0	15SP	G15_008	FROM->TO	PETERSBRG.N7115.00 - PETERSBURG 115KV CKT Z1	137	137	0.22222	107.8717	SPALDING 115KV SWITCHED SHUNT
FDNS	09ALL_G15_008	0	15G	G15_008	FROM->TO	PETERSBRG.N7115.00 - PETERSBURG 115KV CKT Z1	137	137	0.27085	107.6933	BLOOMFIELD - CREIGHTON 115KV CKT 1
FDNS	09ALL_G15_008	0	15WP	G15_008	FROM->TO	PETERSBRG.N7115.00 - PETERSBURG 115KV CKT Z1	137	137	0.23088	107.3755	GAVINS POINT - YANKON JCT 115KV CKT 1
FDNS	09ALL_G15_008	0	15SP	G15_008	FROM->TO	PETERSBRG.N7115.00 - PETERSBURG 115KV CKT Z1	137	137	0.2459	107.2029	LN-WAPA6
FDNS	09ALL_G15_008	0	15SP	G15_008	FROM->TO	PETERSBRG.N7115.00 - PETERSBURG 115KV CKT Z1	137	137	0.2459	107.2029	NEB001NPPB2
FDNS	09ALL_G15_008	0	15SP	G15_008	FROM->TO	PETERSBRG.N7115.00 - PETERSBURG 115KV CKT Z1	137	137	0.22222	107.1602	ALBION 115KV SWITCHED SHUNT
FDNS	09ALL_G15_008	0	15SP	G15_008	FROM->TO	PETERSBRG.N7115.00 - PETERSBURG 115KV CKT Z1	137	137	0.20625	107.1544	NELIGH - NELIGH.EAST7115.00 115KV CKT 2
FDNS	09ALL_G15_008	0	15SP	G15_008	FROM->TO	PETERSBRG.N7115.00 - PETERSBURG 115KV CKT Z1	137	137	0.2459	107.1390	ONEILL - SPENCER 115KV CKT 1
FDNSLock	09ALL_G15_008	0	15SP	G15_008	FROM->TO	PETERSBRG.N7115.00 - PETERSBURG 115KV CKT Z1	137	137	0.22222	107.1382	ALBION 115KV SWITCHED SHUNT
FDNS	09ALL_G15_008	0	15WP	G15_008	FROM->TO	PETERSBRG.N7115.00 - PETERSBURG 115KV CKT Z1	137	137	0.22329	106.9684	GRPRAR1-LNX3345.00 - HOLT.CO3 345.00 345KV CKT 1
FDNS	09ALL_G15_008	0	15WP	G15_008	FROM->TO	PETERSBRG.N7115.00 - PETERSBURG 115KV CKT Z1	137	137	0.22329	106.9646	GRPRAR1-LNX3345.00 - YANKTON 345KV CKT Z

SOLUTION	GROUP	SCENARIO	SEASON	SOURCE	DIRECTION	MONITORED ELEMENT	RATEA (MVA)	RATEB(MVA)	TDF	TC%LOADING (% MVA)	CONTINGENCY
FDNS	09ALL_G15_008	0	15WP	G15_008	FROM->TO	PETERSBRG.N7115.00 - PETERSBURG 115KV CKT Z1	137	137	0.22329	106.9384	GRAND ISLAND - HOLT.CO3 345.00 345KV CKT 1
FDNS	09NR_G15_008	0	15G	G15_008	FROM->TO	PETERSBRG.N7115.00 - PETERSBURG 115KV CKT Z1	137	137	0.27598	106.6410	BLOOMFIELD - GAVINS POINT 115KV CKT 1
FDNS	09ALL_G15_008	0	15SP	G15_008	FROM->TO	PETERSBRG.N7115.00 - PETERSBURG 115KV CKT Z1	137	137	0.2459	106.3131	FT RANDAL - SPENCER 115KV CKT 1
FDNS	09ALL_G15_008	0	15G	G15_008	FROM->TO	PETERSBRG.N7115.00 - PETERSBURG 115KV CKT Z1	137	137	0.22271	106.2846	KELLY - MEADOWGROVE4230.00 230KV CKT 1
FDNS	09ALL_G15_008	0	15G	G15_008	FROM->TO	PETERSBRG.N7115.00 - PETERSBURG 115KV CKT Z1	137	137	0.21621	106.0779	BROKEN BOW - LOUP CITY 115KV CKT 1
FDNS	09ALL_G15_008	0	15WP	G15_008	FROM->TO	PETERSBRG.N7115.00 - PETERSBURG 115KV CKT Z1	137	137	0.24581	105.9082	LN-WAPA6
FDNS	09ALL_G15_008	0	15WP	G15_008	FROM->TO	PETERSBRG.N7115.00 - PETERSBURG 115KV CKT Z1	137	137	0.24581	105.9082	NEB001NPPB2
FDNS	09ALL_G15_008	0	15WP	G15_008	FROM->TO	PETERSBRG.N7115.00 - PETERSBURG 115KV CKT Z1	137	137	0.24581	105.8254	ONEILL - SPENCER 115KV CKT 1
FDNS	09ALL_G15_008	0	15SP	G15_008	FROM->TO	PETERSBRG.N7115.00 - PETERSBURG 115KV CKT Z1	137	137	0.22222	105.5779	GEN640418 1-ELKHORN RIDGE WIND
FDNS	09ALL_G15_008	0	15G	G15_008	FROM->TO	PETERSBRG.N7115.00 - PETERSBURG 115KV CKT Z1	137	137	0.24574	105.3594	LN-WAPA6
FDNS	09ALL_G15_008	0	15G	G15_008	FROM->TO	PETERSBRG.N7115.00 - PETERSBURG 115KV CKT Z1	137	137	0.24574	105.3594	NEB001NPPB2
FDNS	09ALL_G15_008	0	15WP	G15_008	FROM->TO	PETERSBRG.N7115.00 - PETERSBURG 115KV CKT Z1	137	137	0.2221	105.3336	GEN640010 1-GERALD GENTLEMAN STATION UNIT 1
FDNS	09ALL_G15_008	0	15G	G15_008	FROM->TO	PETERSBRG.N7115.00 - PETERSBURG 115KV CKT Z1	137	137	0.24574	105.3263	ONEILL - SPENCER 115KV CKT 1
FDNS	09ALL_G15_008	0	15WP	G15_008	FROM->TO	PETERSBRG.N7115.00 - PETERSBURG 115KV CKT Z1	137	137	0.2221	105.2325	GEN640428 1-BRKNBW.GEN1W0.6900
FDNS	09ALL_G15_008	0	15WP	G15_008	FROM->TO	PETERSBRG.N7115.00 - PETERSBURG 115KV CKT Z1	137	137	0.2221	105.0317	GEN640449 W-BRKNBW.GEN2W0.6900
FDNS	09ALL_G15_008	0	15G	G15_008	FROM->TO	PETERSBRG.N7115.00 - PETERSBURG 115KV CKT Z1	137	137	0.22321	105.0012	GRPRAR1-LNX3345.00 - HOLT.CO3 345.00 345KV CKT 1
FDNS	09ALL_G15_008	0	15G	G15_008	FROM->TO	PETERSBRG.N7115.00 - PETERSBURG 115KV CKT Z1	137	137	0.22321	104.9952	GRPRAR1-LNX3345.00 - YANKTON 345KV CKT Z
FDNS	09ALL_G15_008	0	15G	G15_008	FROM->TO	PETERSBRG.N7115.00 - PETERSBURG 115KV CKT Z1	137	137	0.24574	104.9660	FT RANDAL - SPENCER 115KV CKT 1
FDNS	09ALL_G15_008	0	15G	G15_008	FROM->TO	PETERSBRG.N7115.00 - PETERSBURG 115KV CKT Z1	137	137	0.22321	104.9606	GRAND ISLAND - HOLT.CO3 345.00 345KV CKT 1
FDNS	09ALL_G15_008	0	15WP	G15_008	FROM->TO	PETERSBRG.N7115.00 - PETERSBURG 115KV CKT Z1	137	137	0.228	104.9483	UTICA - YANKON JCT 115KV CKT 1
FDNS	09ALL_G15_008	0	15WP	G15_008	FROM->TO	PETERSBRG.N7115.00 - PETERSBURG 115KV CKT Z1	137	137	0.22398	104.9321	NEB02WAPAB2
FDNS	09ALL_G15_008	0	15WP	G15_008	FROM->TO	PETERSBRG.N7115.00 - PETERSBURG 115KV CKT Z1	137	137	0.2221	104.8821	GEN640011 2-GERALD GENTLEMAN STATION UNIT 2
FDNS	09ALL_G15_008	0	15WP	G15_008	FROM->TO	PETERSBRG.N7115.00 - PETERSBURG 115KV CKT Z1	137	137	0.22395	104.8779	GAVINS POINT - SPIRIT MOUND 115KV CKT 1
FDNS	09ALL_G15_008	0	15WP	G15_008	FROM->TO	PETERSBRG.N7115.00 - PETERSBURG 115KV CKT Z1	137	137	0.24581	104.8419	FT RANDAL - SPENCER 115KV CKT 1
FDNS	09ALL_G15_008	0	15WP	G15_008	FROM->TO	PETERSBRG.N7115.00 - PETERSBURG 115KV CKT Z1	137	137	0.23366	104.3852	HOSKINS - NORTH NORFOLK 115KV CKT 1
FDNS	09ALL_G15_008	0	15WP	G15_008	FROM->TO	PETERSBRG.N7115.00 - PETERSBURG 115KV CKT Z1	137	137	0.22398	104.3616	GAVINS POINT - HARTINGTON 115KV CKT 1
FDNS	09ALL_G15_008	0	15G	G15_008	FROM->TO	PETERSBRG.N7115.00 - PETERSBURG 115KV CKT Z1	137	137	0.23078	104.0418	GAVINS POINT - YANKON JCT 115KV CKT 1
FDNS	09ALL_G15_008	0	15G	G15_008	FROM->TO	PETERSBRG.N7115.00 - PETERSBURG 115KV CKT Z1	137	137	0.22791	102.6245	UTICA - YANKON JCT 115KV CKT 1
FDNS	09ALL_G15_008	0	15G	G15_008	FROM->TO	PETERSBRG.N7115.00 - PETERSBURG 115KV CKT Z1	137	137	0.22201	102.6000	GEN640428 1-BRKNBW.GEN1W0.6900
FDNS	09ALL_G15_008	0	15G	G15_008	FROM->TO	PETERSBRG.N7115.00 - PETERSBURG 115KV CKT Z1	137	137	0.23358	102.4800	HOSKINS - NORTH NORFOLK 115KV CKT 1
FDNS	09ALL_G15_008	0	15G	G15_008	FROM->TO	PETERSBRG.N7115.00 - PETERSBURG 115KV CKT Z1	137	137	0.22201	102.4019	GEN640449 W-BRKNBW.GEN2W0.6900
FDNS	09ALL_G15_008	0	15G	G15_008	FROM->TO	PETERSBRG.N7115.00 - PETERSBURG 115KV CKT Z1	137	137	0.22386	102.2500	GAVINS POINT - SPIRIT MOUND 115KV CKT 1
FDNS	09ALL_G15_008	0	15WP	G15_008	FROM->TO	PETERSBRG.N7115.00 - PETERSBURG 115KV CKT Z1	137	137	0.2221	102.1318	BASE CASE
FDNS	09ALL_G15_008	0	15WP	G15_008	FROM->TO	PETERSBRG.N7115.00 - PETERSBURG 115KV CKT Z1	137	137	0.2221	102.0570	NUCOR-1
FDNS	09ALL_G15_008	0	15G	G15_008	FROM->TO	PETERSBRG.N7115.00 - PETERSBURG 115KV CKT Z1	137	137	0.2239	101.8228	NEB02WAPAB2
FDNS	09ALL_G15_008	0	15G	G15_008	FROM->TO	PETERSBRG.N7115.00 - PETERSBURG 115KV CKT Z1	137	137	0.22566	101.7677	DAK02WAPAB2
FDNS	09ALL_G15_008	0	20SP	G15_008	FROM->TO	PETERSBRG.N7115.00 - PETERSBURG 115KV CKT Z1	137	137	0.22547	100.1571	NELIGH.EAST3345.00 (NELIGH.E T1) 345/115/13.8KV TRANSFORMER CKT 1
FDNS	09ALL_G15_008	0	20SP	G15_008	FROM->TO	PETERSBRG.N7115.00 - PETERSBURG 115KV CKT Z1	137	137	0.22547	100.1232	HOSKINS - NELIGH.EAST3345.00 345KV CKT 1
FDNS	09ALL_G15_008	0	15WP	G15_008	FROM->TO	PETERSBRG.N7115.00 - PETERSBURG 115KV CKT Z1	137	137	0.20614	100.0000	NELIGH - NELIGH.EAST7115.00 115KV CKT 2
FDNS	09ALL_G15_008	0	15WP	G15_008	FROM->TO	PETERSBRG.N7115.00 - PETERSBURG 115KV CKT Z1	137	137	0.22048	99.9000	BROKEN BOW - CROOKED CREEK 115KV CKT 1
FDNS	09ALL_G15_008	0	15WP	G15_008	FROM->TO	PETERSBRG.N7115.00 - PETERSBURG 115KV CKT Z1	137	137	0.22048	99.9000	CROOKED CREEK (CR.CREEK T1) 230/115/13.8KV TRANSFORMER CKT 1
FDNS	09ALL_G15_008	0	15WP	G15_008	FROM->TO	PETERSBRG.N7115.00 - PETERSBURG 115KV CKT Z1	137	137	0.2221	99.8000	GEN635214 4-NEAL UNIT 4
FDNS	09ALL_G15_008	0	25SP	G15_008	FROM->TO	PETERSBRG.N7115.00 - PETERSBURG 115KV CKT Z1	137	137	0.22553	99.6000	NELIGH.EAST3345.00 (NELIGH.E T1) 345/115/13.8KV TRANSFORMER CKT 1
FDNS	09ALL_G15_008	0	15G	G15_008	FROM->TO	PETERSBRG.N7115.00 - PETERSBURG 115KV CKT Z1	137	137	0.22201	99.5000	BASE CASE
FDNS	09ALL_G15_008	0	25SP	G15_008	FROM->TO	PETERSBRG.N7115.00 - PETERSBURG 115KV CKT Z1	137	137	0.22553	99.5000	HOSKINS - NELIGH.EAST3345.00 345KV CKT 1
FDNS	09ALL_G15_008	2	15SP	G15_008	TO->FROM	ALBION - PETERSBURG 115KV CKT 1	137	137	0.22222	107.5527	NELIGH.EAST3345.00 (NELIGH.E T1) 345/115/13.8KV TRANSFORMER CKT 1
FDNS	09ALL_G15_008	2	15SP	G15_008	TO->FROM	ALBION - PETERSBURG 115KV CKT 1	137	137	0.22222	107.5049	HOSKINS - NELIGH.EAST3345.00 345KV CKT 1
FDNS	09ALL_G15_008	2	15WP	G15_008	TO->FROM	ALBION - PETERSBURG 115KV CKT 1	137	137	0.2221	100.9347	NELIGH.EAST3345.00 (NELIGH.E T1) 345/115/13.8KV TRANSFORMER CKT 1
FDNS	09ALL_G15_008	2	15WP	G15_008	TO->FROM	ALBION - PETERSBURG 115KV CKT 1	137	137	0.2221	100.9254	HOSKINS - NELIGH.EAST3345.00 345KV CKT 1
FDNS	09ALL_G15_008	2	15G	G15_008	FROM->TO	BATTLE CREEK - NORTH NORFOLK 115KV CKT 1	193	193	0.41519	102.8856	NELIGH.EAST3345.00 (NELIGH.E T1) 345/115/13.8KV TRANSFORMER CKT 1
FDNS	09ALL_G15_008	2	15G	G15_008	FROM->TO	BATTLE CREEK - NORTH NORFOLK 115KV CKT 1	193	193	0.41519	102.8463	HOSKINS - NELIGH.EAST3345.00 345KV CKT 1
FDNS	09NR_G15_008	2	15G	G15_008	FROM->TO	BLOOMFIELD - GAVINS POINT 115KV CKT 1	120	120	0.19127	105.3588	HOSKINS - NELIGH.EAST3345.00 345KV CKT 1
FDNS	09NR_G15_008	2	15G	G15_008	FROM->TO	BLOOMFIELD - GAVINS POINT 115KV CKT 1	120	120	0.19127	105.3270	NELIGH.EAST3345.00 (NELIGH.E T1) 345/115/13.8KV TRANSFORMER CKT 1
FDNS	09ALL_G15_008	2	15SP	G15_008	FROM->TO	PETERSBRG.N7115.00 - PETERSBURG 115KV CKT Z1	137	137	0.22222	111.1394	NELIGH.EAST3345.00 (NELIGH.E T1) 345/115/13.8KV TRANSFORMER CKT 1
FDNS	09ALL_G15_008	2	15SP	G15_008	FROM->TO	PETERSBRG.N7115.00 - PETERSBURG 115KV CKT Z1	137	137	0.22222	111.1009	HOSKINS - NELIGH.EAST3345.00 345KV CKT 1
FDNS	09ALL_G15_008	2	15WP	G15_008	FROM->TO	PETERSBRG.N7115.00 - PETERSBURG 115KV CKT Z1	137	137	0.2221	102.2139	NELIGH.EAST3345.00 (NELIGH.E T1) 345/115/13.8KV TRANSFORMER CKT 1
FDNS	09ALL_G15_008	2	15WP	G15_008	FROM->TO	PETERSBRG.N7115.00 - PETERSBURG 115KV CKT Z1	137	137	0.2221	102.2067	HOSKINS - NELIGH.EAST3345.00 345KV CKT 1
FDNS	09ALL_G15_008	2	15G	G15_008	FROM->TO	PETERSBRG.N7115.00 - PETERSBURG 115KV CKT Z1	137	137	0.22201	99.6000	HOSKINS - NELIGH.EAST3345.00 345KV CKT 1
FDNS	09ALL_G15_008	2	15G	G15_008	FROM->TO	PETERSBRG.N7115.00 - PETERSBURG 115KV CKT Z1	137	137	0.22201	99.6000	NELIGH.EAST3345.00 (NELIGH.E T1) 345/115/13.8KV TRANSFORMER CKT 1
FDNSLock-Blown up	06ALL_G15_009	0	15G	G15_009		Non-Converged Contingency	0	0	0.42453	-	SPP-SWPS-01
FDNSLock-Blown up	06ALL_G15_009	0	15G	G15_009		Non-Converged Contingency	956	994	0.25762	-	OKLAUNION - TUCO INTERCHANGE 345KV CKT 1
FDNS	00NR_G15_009	0	15SP	G15_009	FROM->TO	CUNNINGHAM STATION - MADDOX STATION 115KV CKT 1	160	160	0.06245	124.8498	HOBBS INTERCHANGE - MADDOX STATION 115KV CKT 1
FDNS	00NR_G15_009	0	25SP	G15_009	FROM->TO	CUNNINGHAM STATION - POTASH JUNCTION INTERCHANGE 230KV CKT 1	319	351	0.06783	116.069	HOBBS - KIOWA 7345.00 345KV CKT 1
FDNS	00NR_G15_009	0	15SP	G15_009	FROM->TO	HOBBS INTERCHANGE (ME C0482951) 230/115/13.2KV TRANSFORMER CKT 1	150	150	0.22126	101.0599	CUNNINGHAM STATION - HOBBS INTERCHANGE 230KV CKT 1
FDNS	00NR_G15_009	0	15SP	G15_009	FROM->TO	HOBBS INTERCHANGE (ME C0482951) 230/115/13.2KV TRANSFORMER CKT 1	150	150	0.22126	99.7	CUNNINGHAM STATION - HOBBS INTERCHANGE 230KV CKT 1
FDNS	00NR_G15_009	2	15SP	G15_009	FROM->TO	CUNNINGHAM STATION - MADDOX STATION 115KV CKT 1	160	160	0.04248	121.4924	HOBBS INTERCHANGE - MADDOX STATION 115KV CKT 1
FDNS	06ALL_G15_010	0	15SP	G15_010	FROM->TO	CURRY COUNTY INTERCHANGE - DEAF SMITH REC-#20 115KV CKT 1	96	96	0.07981	101.2602	BASE CASE
FDNS	00NR_G15_015	0	20WP	G15_015	FROM->TO	CLEARWATER - GILL ENERGY CENTER WEST 138KV CKT 1	143	143	0.02978	103.5213	GILL ENERGY CENTER SOUTH - VIOLA 4 138.00 138KV CKT 1
FDNS	04NR_G15_017	0	15G	G15_017_G	FROM->TO	ARNOLD - RANSOM 115KV CKT 1	79.7	79.7	0.28279	103.8764	MINGO (MINGO) 345/115/13.8KV TRANSFORMER CKT 1
FDNS	00_G15_017	0	15SP	G15_017_SP	FROM->TO	ARNOLD - RANSOM 115KV CKT 1	79.7	79.7	0.27835	102.9439	MINGO (MINGO) 345/115/13.8KV TRANSFORMER CKT 1
FDNS	00_G15_017	0	20SP	G15_017_SP	FROM->TO	ARNOLD - RANSOM 115KV CKT 1	79.7	79.7	0.27796	102.5233	MINGO (MINGO) 345/115/13.8KV TRANSFORMER CKT 1
FDNS	00_G15_017	0	15WP	G15_017_WP	FROM->TO	ARNOLD - RANSOM 115KV CKT 1	79.7	79.7	0.27824	125.2399	MINGO (MINGO) 345/115/13.8KV TRANSFORMER CKT 1
FDNS	00_G15_017	0	20WP	G15_017_WP	FROM->TO	ARNOLD - RANSOM 115KV CKT 1	79.7	79.7	0.27791	121.7379	MINGO (MINGO) 345/115/13.8KV TRANSFORMER CKT 1
FDNS	00_G15_017	0	15WP	G15_017_WP	FROM->TO	ARNOLD - RANSOM 115KV CKT 1	79.7	79.7	0.06853	100.8358	BASE CASE
FDNS	06ALL_G15_020	0	15SP	G15_020	FROM->TO	CURRY COUNTY INTERCHANGE - DEAF SMITH REC-#20 115KV CKT 1	96	96	0.11967	101.337	BASE CASE

SOLUTION	GROUP	SCENARIO	SEASON	SOURCE	DIRECTION	MONITORED ELEMENT	RATEA (MVA)	RATEB(MVA)	TDF	TC%LOADING (% MVA)	CONTINGENCY
FDNS	03ALL_G15_021	0	20SP	G15_021	FROM->TO	PILE - SCOTT CITY 115KV CKT 1	195.4	195.4	0.35929	99.7000	HOLCOMB (HOLCOMB) 345/115/13.8KV TRANSFORMER CKT 1
FDNS	00NR_G15_022	0	25SP	G15_022	TO->FROM	KRESS INTERCHANGE - SWISHER COUNTY INTERCHANGE 115KV CKT 1	159	175	0.53177	113.3515	PALO DURO SUB - RANDALL COUNTY INTERCHANGE 115KV CKT 1
FDNS	00NR_G15_022	0	25SP	G15_022	TO->FROM	KRESS INTERCHANGE - SWISHER COUNTY INTERCHANGE 115KV CKT 1	159	175	0.53177	112.6478	SPP-SWPS-T66
FDNS	00NR_G15_022	0	25SP	G15_022	TO->FROM	KRESS INTERCHANGE - SWISHER COUNTY INTERCHANGE 115KV CKT 1	159	175	0.53177	112.5875	HAPPY INTERCHANGE - PALO DURO SUB 115KV CKT 1
FDNS	00NR_G15_022	0	25SP	G15_022	TO->FROM	KRESS INTERCHANGE - SWISHER COUNTY INTERCHANGE 115KV CKT 1	159	175	0.57449	111.3035	BASE CASE
FDNS	00NR_G15_022	0	25SP	G15_022	TO->FROM	KRESS INTERCHANGE - SWISHER COUNTY INTERCHANGE 115KV CKT 1	159	175	0.48171	107.8984	KRESS INTERCHANGE - NEWHART 115KV CKT 1
FDNS	00NR_G15_022	0	25SP	G15_022	TO->FROM	KRESS INTERCHANGE - SWISHER COUNTY INTERCHANGE 115KV CKT 1	159	175	0.56943	105.945	FLOYD COUNTY INTERCHANGE - TUCO INTERCHANGE 115KV CKT 1
FDNS	00NR_G15_022	0	25SP	G15_022	TO->FROM	KRESS INTERCHANGE - SWISHER COUNTY INTERCHANGE 115KV CKT 1	159	175	0.60658	105.8106	NEWHART 230 - SWISHER COUNTY INTERCHANGE 230KV CKT 1
FDNS	00NR_G15_022	0	25SP	G15_022	TO->FROM	KRESS INTERCHANGE - SWISHER COUNTY INTERCHANGE 115KV CKT 1	159	175	0.57261	105.762	TUCO INTERCHANGE (GE M102345) 230/115/13.2KV TRANSFORMER CKT 1
FDNS	00NR_G15_022	0	25SP	G15_022	TO->FROM	KRESS INTERCHANGE - SWISHER COUNTY INTERCHANGE 115KV CKT 1	159	175	0.56756	105.6752	NEWHART 230 (UPDATE LATER) 230/115/13.2KV TRANSFORMER CKT 2
FDNS	00NR_G15_022	0	25SP	G15_022	TO->FROM	KRESS INTERCHANGE - SWISHER COUNTY INTERCHANGE 115KV CKT 1	159	175	0.56756	105.6752	NEWHART 230 (WAUK WT01105) 230/115/13.2KV TRANSFORMER CKT 1
FDNS	00NR_G15_022	0	25SP	G15_022	TO->FROM	KRESS INTERCHANGE - SWISHER COUNTY INTERCHANGE 115KV CKT 1	159	175	0.57274	105.5874	TUCO INTERCHANGE (ENRCO 136401) 230/115/13.2KV TRANSFORMER CKT 2
FDNS	00NR_G15_022	0	25SP	G15_022	TO->FROM	KRESS INTERCHANGE - SWISHER COUNTY INTERCHANGE 115KV CKT 1	159	175	0.57652	104.572	TUCO INTERCHANGE - YOAKUM_345 345.00 345KV CKT 1
FDNS	00NR_G15_022	0	25SP	G15_022	TO->FROM	KRESS INTERCHANGE - SWISHER COUNTY INTERCHANGE 115KV CKT 1	159	175	0.57449	104.5207	GEN525562 1-TOLK GEN #2 24 KV
FDNS	00NR_G15_022	0	25SP	G15_022	TO->FROM	KRESS INTERCHANGE - SWISHER COUNTY INTERCHANGE 115KV CKT 1	159	175	0.57449	104.311	GEN525561 1-TOLK GEN #1 24 KV
FDNS	00NR_G15_022	0	25SP	G15_022	TO->FROM	KRESS INTERCHANGE - SWISHER COUNTY INTERCHANGE 115KV CKT 1	159	175	0.57123	104.0876	CROSBY COUNTY INTERCHANGE - LUBBOCK EAST INTERCHANGE 115KV CKT 1
FDNS	00NR_G15_022	0	25SP	G15_022	TO->FROM	KRESS INTERCHANGE - SWISHER COUNTY INTERCHANGE 115KV CKT 1	159	175	0.57467	104.085	BUSHLAND INTERCHANGE - DEAF SMITH COUNTY INTERCHANGE 230KV CKT 1
FDNS	00NR_G15_022	0	25SP	G15_022	TO->FROM	KRESS INTERCHANGE - SWISHER COUNTY INTERCHANGE 115KV CKT 1	159	175	0.55563	103.8002	HALE CO INTERCHANGE - TUCO INTERCHANGE 115KV CKT 1
FDNS	00NR_G15_022	0	25SP	G15_022	TO->FROM	KRESS INTERCHANGE - SWISHER COUNTY INTERCHANGE 115KV CKT 1	159	175	0.57057	103.7588	PLANT X STATION (WH ALM20171) 230/115/13.2KV TRANSFORMER CKT 1
FDNS	00NR_G15_022	0	25SP	G15_022	TO->FROM	KRESS INTERCHANGE - SWISHER COUNTY INTERCHANGE 115KV CKT 1	159	175	0.58026	103.5807	TUCO INTERCHANGE - TUCO_2 230.00 230KV CKT 1
FDNS	00NR_G15_022	0	25SP	G15_022	TO->FROM	KRESS INTERCHANGE - SWISHER COUNTY INTERCHANGE 115KV CKT 1	159	175	0.57441	103.289	JONES STATION - LUBBOCK EAST INTERCHANGE 230KV CKT 1
FDNS	00NR_G15_022	0	25SP	G15_022	TO->FROM	KRESS INTERCHANGE - SWISHER COUNTY INTERCHANGE 115KV CKT 1	159	175	0.57449	103.1495	BUSHLAND INTERCHANGE - POTTER COUNTY INTERCHANGE 230KV CKT 1
FDNS	00NR_G15_022	0	25SP	G15_022	TO->FROM	KRESS INTERCHANGE - SWISHER COUNTY INTERCHANGE 115KV CKT 1	159	175	0.57534	103.0257	CARLISLE INTERCHANGE - TUCO INTERCHANGE 230KV CKT 1
FDNS	06ALL_G15_022	0	25SP	G15_022	TO->FROM	KRESS INTERCHANGE - SWISHER COUNTY INTERCHANGE 115KV CKT 1	159	175	0.56575	101.8902	BASE CASE
FDNS	06ALL_G15_022	0	25SP	G15_022	TO->FROM	KRESS INTERCHANGE - SWISHER COUNTY INTERCHANGE 115KV CKT 1	159	175	0.47503	99.9	KRESS INTERCHANGE - NEWHART 115KV CKT 1
FDNSLock-Blown up	09ALL_G15_023	0	15SP	G15_023		Non-Converged Contingency	720	720	0.67701	76.2030	GRAND ISLAND - HOLT.CO3 345.00 345KV CKT 1
FDNSLock-Blown up	09ALL_G15_023	0	15G	G15_023		Non-Converged Contingency	720	720	0.67611	61.9200	GRAND ISLAND - HOLT.CO3 345.00 345KV CKT 1
FDNSLock-Blown up	09ALL_G15_023	0	15WP	G15_023		Non-Converged Contingency	720	720	0.67609	57.8345	GRAND ISLAND - HOLT.CO3 345.00 345KV CKT 1
FDNS	09ALL_G15_023	0	15G	G15_023	TO->FROM	GRAND ISLAND - HOLT.CO3 345.00 345KV CKT 1	720	720	1	104.7511	FTTHOM2-LNX3345.00 - GRPRAR2-LNX3345.00 345KV CKT 1
FDNS	09ALL_G15_023	0	15WP	G15_023	TO->FROM	GRAND ISLAND - HOLT.CO3 345.00 345KV CKT 1	720	720	1	102.2539	FTTHOM2-LNX3345.00 - GRPRAR2-LNX3345.00 345KV CKT 1
FDNS	09ALL_G15_023	0	15SP	G15_023	TO->FROM	GRAND ISLAND - HOLT.CO3 345.00 345KV CKT 1	720	720	1	102.2227	FTTHOM2-LNX3345.00 - GRPRAR2-LNX3345.00 345KV CKT 1
FDNS	09ALL_G15_023	0	15G	G15_023	TO->FROM	GRAND ISLAND - HOLT.CO3 345.00 345KV CKT 1	720	720	1	101.4100	FT THOMPSON - FTTHOM2-LNX3345.00 345KV CKT Z
FDNS	09ALL_G15_023	0	15SP	G15_023	TO->FROM	GRAND ISLAND - HOLT.CO3 345.00 345KV CKT 1	720	720	1	100.7893	FT THOMPSON - FTTHOM2-LNX3345.00 345KV CKT Z
FDNS	09ALL_G15_023	0	15WP	G15_023	TO->FROM	GRAND ISLAND - HOLT.CO3 345.00 345KV CKT 1	720	720	1	100.6396	FT THOMPSON - FTTHOM2-LNX3345.00 345KV CKT Z
FDNS	09ALL_G15_023	0	15G	G15_023	TO->FROM	GRAND ISLAND - HOLT.CO3 345.00 345KV CKT 1	720	720	1	100.4577	GRPRAR2-LNX3345.00 - YANKTON 345KV CKT Z
FDNS	09ALL_G15_023	0	15SP	G15_023	TO->FROM	GRAND ISLAND - HOLT.CO3 345.00 345KV CKT 1	720	720	1	99.8000	GRPRAR2-LNX3345.00 - YANKTON 345KV CKT Z
FDNS	09ALL_G15_023	0	15WP	G15_023	TO->FROM	GRAND ISLAND - HOLT.CO3 345.00 345KV CKT 1	720	720	1	99.8000	GRPRAR2-LNX3345.00 - YANKTON 345KV CKT Z
FDNS	03ALL_G15_026	0	15WP	G15_026	FROM->TO	BUCKNER7 345.00 - HOLCOMB 345KV CKT 1	726.6	726.6	0.43946	100.9471	G13-010T 345.00 - POST ROCK 345KV CKT 1
FDNS	03ALL_G15_026	0	25SP	G15_026	FROM->TO	BUCKNER7 345.00 - HOLCOMB 345KV CKT 1	726.6	726.6	0.4447	99.6000	G13-010T 345.00 - POST ROCK 345KV CKT 1
FDNS	03ALL_G15_026	2	15WP	G15_026	FROM->TO	BUCKNER7 345.00 - HOLCOMB 345KV CKT 1	726.6	726.6	0.439	103.2758	G13-010T 345.00 - POST ROCK 345KV CKT 1
FDNS	03ALL_G15_026	3	15WP	G15_026	FROM->TO	BUCKNER7 345.00 - HOLCOMB 345KV CKT 1	726.6	726.6	0.43898	103.5354	G13-010T 345.00 - POST ROCK 345KV CKT 1
FDNS	03ALL_G15_027	0	15SP	G15_027	TO->FROM	CIMARRON RIVER TAP - KISMET 3 115.00 115KV CKT 1	133.9	133.9	0.29351	101.2377	BUCKNER7 345.00 - HOLCOMB 345KV CKT 1
FDNS	03ALL_G15_027	0	15WP	G15_027	FROM->TO	CRKCK 3 115.00 - CUDAHY 115KV CKT 1	119.5	148.2	0.29291	116.1348	BUCKNER7 345.00 - HOLCOMB 345KV CKT 1
FDNS	03ALL_G15_027	0	25SP	G15_027	FROM->TO	CRKCK 3 115.00 - CUDAHY 115KV CKT 1	119.5	148.2	0.29907	106.9612	BUCKNER7 345.00 - HOLCOMB 345KV CKT 1
FDNS	03ALL_G15_027	0	15G	G15_027	FROM->TO	CRKCK 3 115.00 - CUDAHY 115KV CKT 1	119.5	148.2	0.29302	103.7400	BUCKNER7 345.00 - HOLCOMB 345KV CKT 1
FDNS	03ALL_G15_027	0	20WP	G15_027	FROM->TO	CRKCK 3 115.00 - CUDAHY 115KV CKT 1	119.5	148.2	0.29817	103.1630	BUCKNER7 345.00 - HOLCOMB 345KV CKT 1
FDNS	03ALL_G15_027	0	15WP	G15_027	FROM->TO	CRKCK 3 115.00 - CUDAHY 115KV CKT 1	119.5	148.2	0.29085	101.9051	BASE CASE
FDNS	03ALL_G15_027	0	15WP	G15_027	FROM->TO	CUDAHY - KISMET 3 115.00 115KV CKT 1	119.5	148.2	0.29291	111.2472	BUCKNER7 345.00 - HOLCOMB 345KV CKT 1
FDNS	03ALL_G15_027	0	25SP	G15_027	FROM->TO	CUDAHY - KISMET 3 115.00 115KV CKT 1	119.5	135.8	0.29907	109.6682	BUCKNER7 345.00 - HOLCOMB 345KV CKT 1
FDNS	03ALL_G15_027	0	15SP	G15_027	FROM->TO	CUDAHY - KISMET 3 115.00 115KV CKT 1	119.5	135.8	0.29351	101.6053	BUCKNER7 345.00 - HOLCOMB 345KV CKT 1
FDNS	03ALL_G15_027	0	25SP	G15_027	TO->FROM	GREENSBURG - SSTARTP3 115.00 115KV CKT 1	115.1	115.1	0.09647	120.9227	BASE CASE
FDNS	03ALL_G15_027	0	20SP	G15_027	TO->FROM	GREENSBURG - SSTARTP3 115.00 115KV CKT 1	115.1	115.1	0.09641	118.4084	BASE CASE
FDNS	03ALL_G15_027	0	20WP	G15_027	TO->FROM	GREENSBURG - SSTARTP3 115.00 115KV CKT 1	119.5	148.2	0.09588	115.7845	BASE CASE
FDNS	03ALL_G15_027	0	15SP	G15_027	TO->FROM	GREENSBURG - SSTARTP3 115.00 115KV CKT 1	115.1	115.1	0.09702	113.9602	BASE CASE
FDNS	03ALL_G15_027	0	15WP	G15_027	TO->FROM	GREENSBURG - SSTARTP3 115.00 115KV CKT 1	119.5	148.2	0.09648	108.5667	BASE CASE
FDNS	03ALL_G15_027	0	15G	G15_027	TO->FROM	GREENSBURG - SSTARTP3 115.00 115KV CKT 1	119.5	134.6	0.09641	108.4852	BASE CASE
FDNS	03ALL_G15_027	2	15SP	G15_027	TO->FROM	CIMARRON RIVER TAP - KISMET 3 115.00 115KV CKT 1	133.9	133.9	0.30997	109.8176	SPP-SEPC-07
FDNS	03ALL_G15_027	2	15G	G15_027	TO->FROM	CIMARRON RIVER TAP - KISMET 3 115.00 115KV CKT 1	150.4	150.4	0.30954	103.1219	CTU SUBLETTE - HASKELL 115KV CKT 1
FDNS	03ALL_G15_027	2	15G	G15_027	TO->FROM	CIMARRON RIVER TAP - KISMET 3 115.00 115KV CKT 1	150.4	150.4	0.30954	99.9000	HASKELL - SEWARD-3 115KV CKT 1
FDNS	01ALL_G15_029	0	15G	G15_029	FROM->TO	FPL SWITCH - MOORELAND 138KV CKT 1	287	287	0.04799	108.8314	BASE CASE

H: Power Flow Analysis (Other Constraints Not Requiring Transmission Reinforcement)

Available upon request. Contact SPP Generation Interconnection Studies for details.

H1: Stand Alone Power Flow Analysis (Other Constraints Not Requiring Transmission Reinforcement)

Available upon request. Contact SPP Generation Interconnection Studies for details.

I: Power Flow Analysis (Constraints from Multi-Contingencies)

Available upon request. Contact SPP Generation Interconnection Studies for details.

J: Group 1 Dynamic Stability Analysis Report

See ABB study report on next page

DEFINITIVE IMPACT STUDY
DISIS-2015-001 (GROUP 01)

FINAL REPORT

July 23, 2015

SUBMITTED TO:
Southwest Power Pool
201 Worthen Drive
Little Rock, AR 72223

SUBMITTED BY:
ABB Inc.
Power Systems Division
Grid Systems Consulting
901 Main Campus Drive, Suite 300
Raleigh, NC 27606

Legal Notice

This document, prepared by ABB Inc., is an account of work sponsored by Southwest Power Pool (SPP). Neither SPP nor ABB Inc, nor any person or persons acting on behalf of either party: (i) makes any warranty or representation, expressed or implied, with respect to the use of any information contained in this report, or that the use of any information, apparatus, method, or process disclosed in this report may not infringe privately owned rights, or (ii) assumes any liabilities with respect to the use of or for damages resulting from the use of any information, apparatus, method, or process disclosed in this document.

ABB Inc – Power Systems Consulting

Technical Report

Southwest Power Pool	**No.** 2015-E15796	
Definitive Impact Study DISIS-2015-001 (Group 01)	7/23/2015	# Pages 20

Author(s):	**Reviewed by:**	**Approved by:**
Lang Chen	Shu Liu	Willie Wong

Executive Summary

Southwest Power Pool (SPP) has commissioned ABB Inc., to perform a Definitive Impact Study for DISIS-2015-001 (Group 01) which includes generation interconnection request GEN-2015-029 (161 MW wind farm connected at the Tatonga 345 kV substation).

The objective of this study is to evaluate the impact of project GEN-2015-029 on the existing and future planning system. The study is performed on three system scenarios provided by SPP:

- 2015 Summer Peak Case
- 2015 Winter Peak Case
- 2025 Summer Peak Case

Results of the stability analysis show that the studied system is stable following all simulated faults with the proposed GEN-2015-029 project in-service. There are no voltage violations in the monitored area and the local synchronous generators show good damping performance which meets the criteria specified.

System short-circuit current levels at up to five buses away from the point of interconnection were calculated and tabulated for SPP's reference.

Power Factor Analysis was performed to ensure the studied project meets FERC and SPP power factor requirements for wind farm interconnections. The results show that a 17MVAr capacitor bank is required on the wind farm's substation 34.5kV bus for 2015 summer peak case, an 18MVAr capacitor bank is required for the 2015 winter peak case, and no capacitor bank is required for 2025 summer peak case. These capacitor bank sizes are only estimates based on the information provided by the Interconnection Customer for its collector system design. Final needs will be based on final designs of the collector system determined by the Interconnection Customer to meet the power factor requirement.

The Low/No Wind analysis shows that a 13.41 MVAr shunt reactor is required to bring the MVAr flow in the POI down to approximate zero under low/no wind conditions for all three studied seasons. The reactor bank size is approximate and the final size will be determined in the final facility and collector system design.

Based on the results of stability analysis it can be concluded that **the proposed GEN-2015-029 project does not adversely impact the stability of the SPP system**.

The results of this analysis are based on available data and assumptions made at the time of conducting this study. If any of the data and/or assumptions made in developing the study model change, the results provided in this report may not apply.

TABLE OF CONTENTS

1 INTRODUCTION 1
2 STABILITY ANALYSIS 5
2.1 STABILITY ANALYSIS METHODOLOGY 5
2.2 STUDY RESULTS 11
3 SHORT CIRCUIT ANALYSIS 13
4 POWER FACTOR ANALYSIS 17
4.1 POWER FACTOR ANALYSIS METHODOLOGY 17
4.2 STUDY RESULTS 17
5 LOW WIND/NO WIND ANALYSIS 19
5.1 LOW/NO WIND ANALYSIS METHODOLOGY 19
5.2 STUDY RESULTS 19
6 CONCLUSIONS 20
APPENDIX A SOUTHWEST POWER POOL DISTURBANCE PERFORMANCE CRITERIA REQUIREMENTS 22
APPENDIX B SIMULATION PLOTS FOR STABILITY ANALYSIS 25
APPENDIX C POWER FACTOR ANALYSIS RESULTS 26

1 INTRODUCTION

Southwest Power Pool (SPP) has commissioned ABB Inc., to perform a Definitive Impact Study for DISIS-2015-001 (Group 01) which includes generation interconnection request GEN-2015-029 (161 MW wind farm connected at the Tatonga 345 kV substation) as shown in Table 1-1.

Table 1-1: Group 01 Generation Interconnection Requests

Request	Size (MW)	Generator Model	POI
GEN-2015-029	161	GE 2.3MW (70 generators)	Tatonga 345kV (515407)

The objective of this study is to evaluate the impact of project GEN-2015-029 on the existing and future planning system. The study is performed on three system scenarios provided by SPP:

- 2015 Summer Peak Case
- 2015 Winter Peak Case
- 2025 Summer Peak Case

SPP provided the study cases for all three system scenarios with GEN-2015-029 included. One line diagrams of the local area for all three seasons are shown in Figure 1-1. The studied generator is circled red.

The three system scenarios supplied by SPP included the following prior queued projects for Group1:

Table 1-2: Group 01 Prior Queued Projects

Request	Size (MW)	Generator Model	Point of Interconnection
GEN-2001-014	94.5	Suzlon 2.1MW	Fort Supply 138kV (520920)
GEN-2001-037	102	GE 1.5MW	Moorland – Woodward 138kV (515785)
GEN-2005-008	120	GE 1.5MW	Woodward 138kV (514785)
GEN-2006-024S	18.9	Suzlon 2.1MW	Buffalo Bear 69kV (521120)
GEN-2006-046	132	Mitsubishi 2.4MW	Dewey 138kV (514787)
GEN-2007-021	200	GE 1.6MW	Tatonga 345kV (515407)
GEN-2007-043	200	GE 1.6	Minco 345kV (514801)
GEN-2007-044	299.2	GE 1.6MW	Tatonga 345kV (515407)
GEN-2007-050	170.2	Siemens 2.3MW	Woodward 138kV (515376)
GEN-2007-062	765	GE 1.5MW	Woodward 345kV (515375)
GEN-2008-003	101.2	Siemens 2.3MW	Woodward 138kV (515376)
GEN-2008-044	197.8	Siemens SWT 2.3MW	Tatonga 345kV (515407)
GEN-2010-011	29.7	Siemens SWT 2.3MW	Tatonga 345kV (515407) (Addition to Gen-2008-044 34.5kV bus (515450)

Request	Size (MW)	Generator Model	Point of Interconnection
GEN-2010-040	298.5	RePower 2.05MW	Cimarron 345kV (514901)
GEN-2011-010	100.8	GE 1.6MW	Minco 345kV (514801)
GEN-2011-019	299	Siemens 2.3MW	Woodward 345kV (515375)
GEN-2011-020	299	Siemens 2.3MW	Woodward 345kV (515375)
GEN-2011-051	104.4	Vestas V90 1.8MW	Tap on the Woodward - Tatonga 345kV line (G11_051-TAP, 562075)
GEN-2011-054	298	Vestas V100 2.0MW	Cimarron 345kV (514901)
GEN-2014-002	10.53 increase (Pmax=209.4)	GE 97.4m 1.79MW (579256)	Tatonga 345kV (515407)
GEN-2014-003	15.84 increase (Pmax=315)	GE 97.4m 1.79MW (579271,579275)	Tatonga 345kV (515407)
GEN-2014-005	5.67 increase (Pmax=106.5)	GE 97.4m 1.79MW (514113)	Minco 345kV (514801)
GEN-2014-020	100.0	Vestas V110 2.0MW	Tuttle 138kV (511501)
GEN-2014-056	250.0	GE 2.0MW	Minco 345kV (514801)

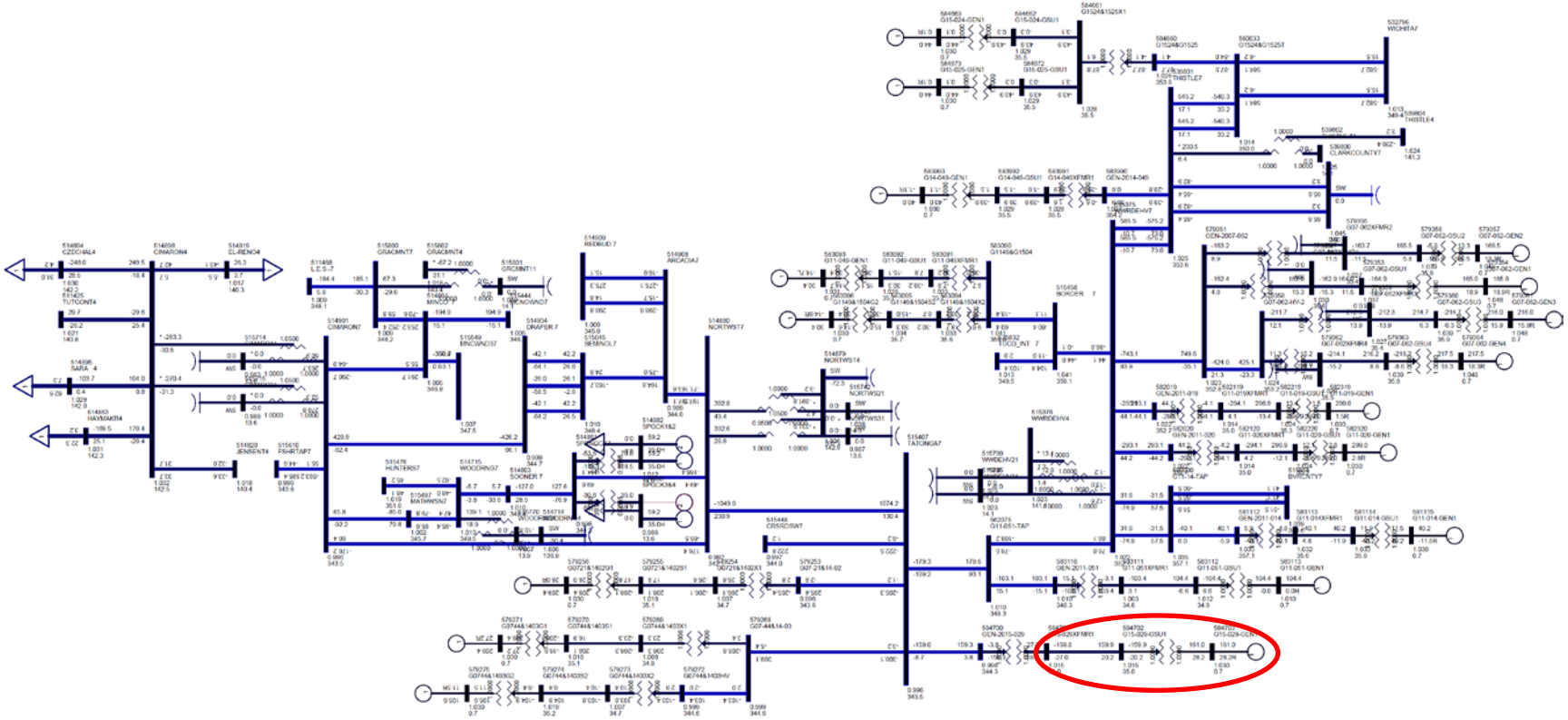

Figure 1-1 (a): One Line Diagram of Tatonga Area for 2015 Summer Peak Case

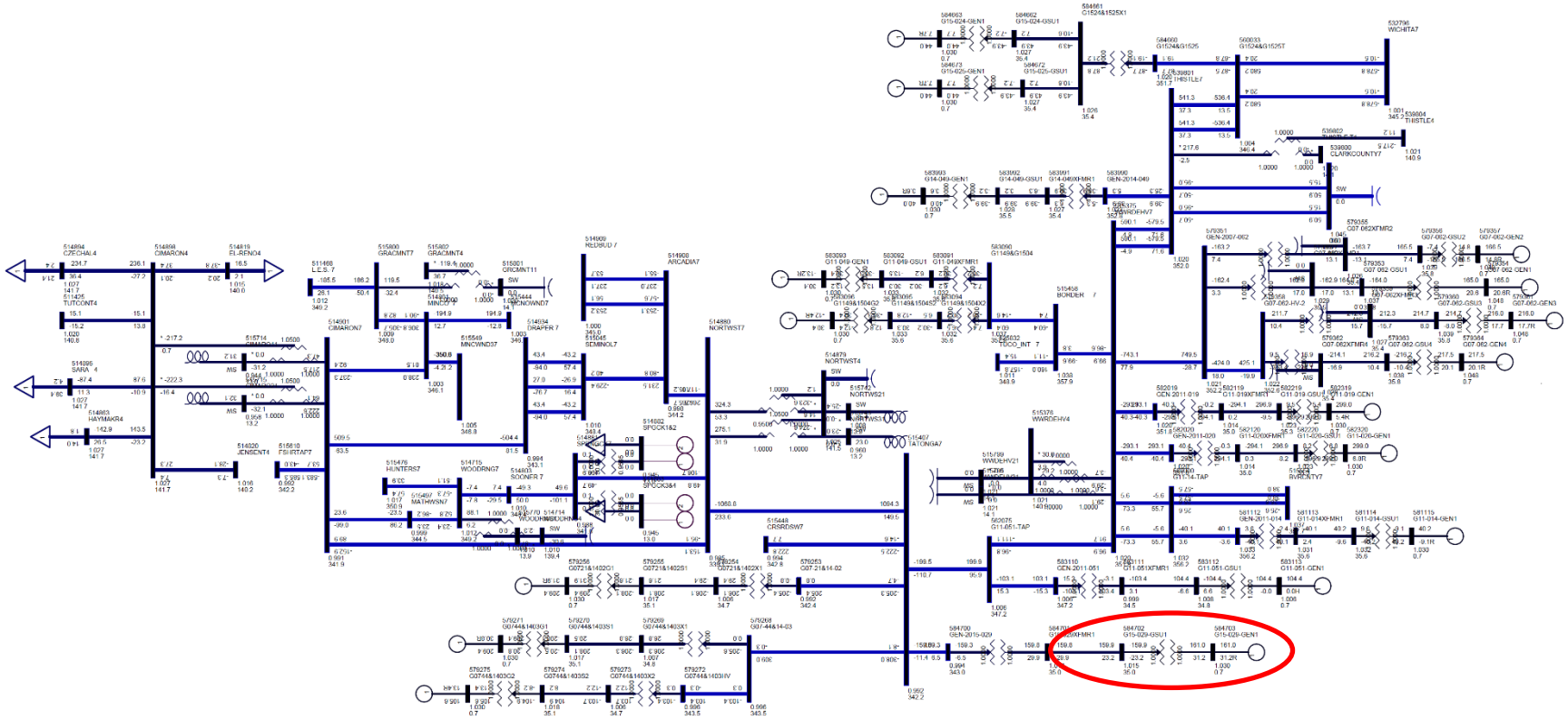

Figure 1-2 (b): One Line Diagram of Tatonga Area for 2015 Winter Peak Case

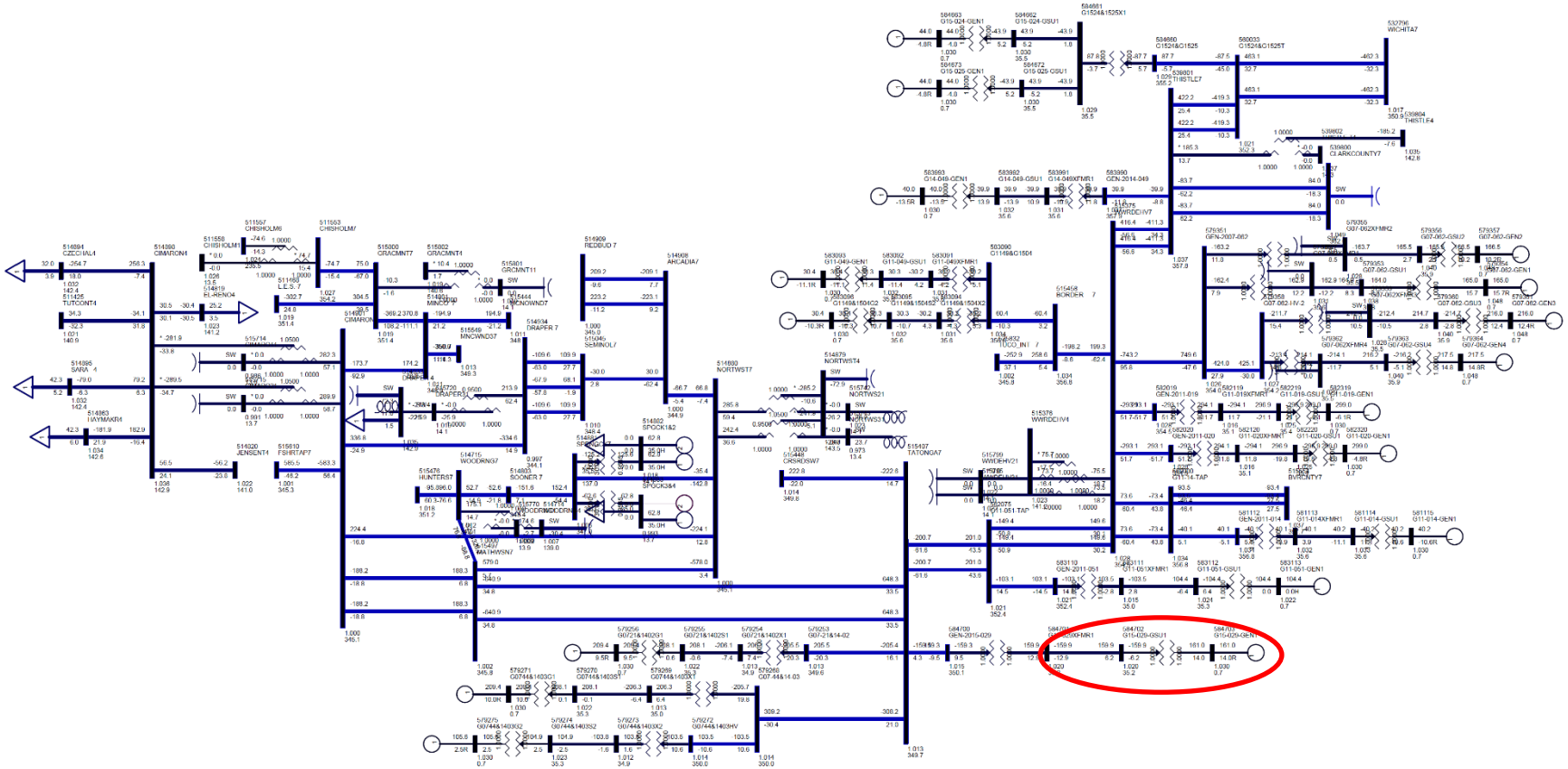

Figure 1-3 (c): One Line Diagram of Tatonga Area for 2025 Summer Peak Case

2 STABILITY ANALYSIS

In this study, ABB investigated the stability of the system for faults in the vicinity of the proposed plant as defined by SPP. The studied faults involve three-phase transformer faults with normal clearing, three-phase line faults with normal clearing and re-closing test, and single-line-to-ground (SLG) faults with stuck breaker.

2.1 STABILITY ANALYSIS METHODOLOGY

Stability analysis is performed to determine whether the electric system would meet stability criteria following the addition of the GEN-2015-029 project.

Stability analysis was performed using Siemens-PTI's PSS/E dynamics program V32.1.0.

All the faults listed in Table 2-1 were simulated for 20 seconds.

Table 2-1: List of Faults for Stability Analysis

Cont. No.	Cont. Name	Description
1	FLT01-3PH	3 phase fault on Cimarron 345kV (514901) to Minco 345kV (514801) CKT 1, near Cimarron. a. Apply fault at the Cimarron 345kV bus. b. Clear fault after 5 cycles and trip the faulted line. c. Wait 20 cycles, and then re-close the line in (b) back into the fault. d. Leave fault on for 5 cycles, then trip the line in (b) and remove fault.
2	FLT02-3PH	3 phase fault on Cimarron 345kV (514901) to Northwest 345kV (514880) CKT 1, near Cimarron. a. Apply fault at the Cimarron 345kV bus. b. Clear fault after 5 cycles and trip the faulted line. c. Wait 20 cycles, and then re-close the line in (b) back into the fault. d. Leave fault on for 5 cycles, then trip the line in (b) and remove fault.
3	FLT03-3PH	3 phase fault on Cimarron 345kV (514901) to Draper 345kV (514934) CKT 1, near Cimarron. a. Apply fault at the Cimarron 345kV bus. b. Clear fault after 5 cycles and trip the faulted line. c. Wait 20 cycles, and then re-close the line in (b) back into the fault. d. Leave fault on for 5 cycles, then trip the line in (b) and remove fault.
4	FLT04-3PH	3 phase fault on Cimarron 345kV (514901) to Mathewson 345kV (515497) CKT 1, near Mathewson. a. Apply fault at the Mathewson 345kV bus. b. Clear fault after 5 cycles and trip the faulted line. c. Wait 20 cycles, and then re-close the line in (b) back into the fault. d. Leave fault on for 5 cycles, then trip the line in (b) and remove fault.
5	FLT05-3PH 2025SP Only	3 phase fault on the on Cimarron 345kV (514901) to Mathewson 345kV (515497) CKT 1 and 2, near Cimarron. a. Apply fault at the Cimarron 345kV bus. b. Clear fault after 5 cycles and trip the faulted lines (CKT 1 and 2).
6	FLT06-3PH	3 phase fault on the Cimarron 345kV (514901) to Cimarron 138kV (514898) to Cimarron 13.8kV (515714) XFMR CKT 1, near Cimarron 345kV. a. Apply fault at the Cimarron 345kV bus. b. Clear fault after 5 cycles and trip the faulted transformer.

Cont. No.	Cont. Name	Description
7	FLT07-3PH	3 phase fault on Minco 345kV (514801) to Gracemont 345kV (515800) CKT 1, near Minco. a. Apply fault at the Minco 345kV bus. b. Clear fault after 5 cycles and trip the faulted line. c. Wait 20 cycles, and then re-close the line in (b) back into the fault. d. Leave fault on for 5 cycles, then trip the line in (b) and remove fault.
8	FLT08-3PH	3 phase fault on Northwest 345kV (514880) to Spring Creek 345kV (514881) CKT 1, near Northwest. a. Apply fault at the Northwest 345kV bus. b. Clear fault after 5 cycles and trip the faulted line. c. Wait 20 cycles, and then re-close the line in (b) back into the fault. d. Leave fault on for 5 cycles, then trip the line in (b) and remove fault.
9	FLT09-3PH	3 phase fault on Northwest 345kV (514880) to Arcadia 345kV (514908) CKT 1, near Northwest. a. Apply fault at the Northwest 345kV bus. b. Clear fault after 5 cycles and trip the faulted line. c. Wait 20 cycles, and then re-close the line in (b) back into the fault. d. Leave fault on for 5 cycles, then trip the line in (b) and remove fault.
10	FLT10-3PH	3 phase fault on Northwest 345kV (514880) to Northwest 138kV (514879) to Northwest 13.8kV (515742) XFMR CKT 1, near Northwest 345kV. a. Apply fault at the Northwest 345kV bus. b. Clear fault after 5 cycles and trip the faulted transformer.
11	FLT11-3PH	3 phase fault on Draper 345kV (514934) to Seminole 345kV (515045) CKT 1, near Draper. a. Apply fault at the Draper 345kV bus. b. Clear fault after 5 cycles and trip the faulted line. c. Wait 20 cycles, and then re-close the line in (b) back into the fault. d. Leave fault on for 5 cycles, then trip the line in (b) and remove fault.
12	FLT12-3PH	3 phase fault on Draper 345kV (514934) to Seminole 345kV (515045) CKT 3, near Draper. a. Apply fault at the Draper 345kV bus. b. Clear fault after 5 cycles and trip the faulted line. c. Wait 20 cycles, and then re-close the line in (b) back into the fault. d. Leave fault on for 5 cycles, then trip the line in (b) and remove fault.
13	FLT13-3PH 2025SP Only	3 phase fault on the Draper 345kV (514934) to Draper 138kV (514933) to Draper 13.8kV (515720) XFMR CKT 1, near Draper 345kV. a. Apply fault at the Draper 345kV bus. b. Clear fault after 5 cycles and trip the faulted transformer.
14	FLT14-3PH	3 phase fault on Mathewson 345kV (515497) to Woodwring 345kV (514715) CKT1, near Mathewson. a. Apply fault at the Mathewson 345kV bus. b. Clear fault after 5 cycles and trip the faulted line. c. Wait 20 cycles, and then re-close the line in (b) back into the fault. d. Leave fault on for 5 cycles, then trip the line in (b) and remove fault.
15	FLT15-3PH 2025SP Only	3 phase fault on Mathewson 345kV (515497) to Northwest 345kV (514880) CKT1, near Mathewson. a. Apply fault at the Mathewson 345kV bus. b. Clear fault after 5 cycles and trip the faulted line. c. Wait 20 cycles, and then re-close the line in (b) back into the fault. d. Leave fault on for 5 cycles, then trip the line in (b) and remove fault.
16	FLT16-3PH 2025SP Only	3 phase fault on Tatonga 345kV (515407) to Mathewson 345kV (515497) CKT1 and 2, near Tatonga. a. Apply fault at the Tatonga 345kV bus. b. Clear fault after 5 cycles and trip the faulted lines (CKT1 and 2).

Cont. No.	Cont. Name	Description
17	FLT17-3PH	3 phase fault on Tatonga 345kV (515407) to G11-051 Tap 345kV (562075) CKT1, near Tatonga. a. Apply fault at the Tatonga 345kV bus. b. Clear fault after 5 cycles and trip the faulted line. c. Wait 20 cycles, and then re-close the line in (b) back into the fault. d. Leave fault on for 5 cycles, then trip the line in (b) and remove fault.
18	FLT18-3PH	3 phase fault on Gracemont 345kV (515800) to LES 345kV (511468) CKT1, near Gracemont. a. Apply fault at the Gracemont 345kV bus. b. Clear fault after 5 cycles and trip the faulted line. c. Wait 20 cycles, and then re-close the line in (b) back into the fault. d. Leave fault on for 5 cycles, then trip the line in (b) and remove fault.
19	FLT19-3PH 2025SP Only	3 phase fault on Gracemont 345kV (515800) to Chisholm 345kV (511533) CKT1, near Gracemont. a. Apply fault at the Gracemont 345kV bus. b. Clear fault after 5 cycles and trip the faulted line. c. Wait 20 cycles, and then re-close the line in (b) back into the fault. d. Leave fault on for 5 cycles, then trip the line in (b) and remove fault.
20	FLT20-3PH	3 phase fault on the Gracemont 345kV (515800) to Gracemont 138kV (515802) to Gracemont 13.8kV (515801) XFMR CKT 1, near Gracemont 345kV. a. Apply fault at the Gracemont 345kV bus. b. Clear fault after 5 cycles and trip the faulted transformer.
21	FLT21-3PH 2025SP Only	3 phase fault on the Chisholm 345kV (511553) to LES 230kV (511557) to Chisholm 13.2kV (511558) XFMR CKT 2, near Chisholm 345kV. a. Apply fault at the Chisholm 345kV bus. b. Clear fault after 5 cycles and trip the faulted transformer.
22	FLT22-3PH	3 phase fault on Spring Creek 345kV (514881) to Sooner 345kV (514803) CKT1, near Spring Creek. a. Apply fault at the Spring Creek 345kV bus. b. Clear fault after 5 cycles and trip the faulted line. c. Wait 20 cycles, and then re-close the line in (b) back into the fault. d. Leave fault on for 5 cycles, then trip the line in (b) and remove fault.
23	FLT23-3PH	3 phase fault on Arcadia 345kV (514908) to Seminole 345kV (515045) CKT2, near Arcadia. a. Apply fault at the Arcadia 345kV bus. b. Clear fault after 5 cycles and trip the faulted line. c. Wait 20 cycles, and then re-close the line in (b) back into the fault. d. Leave fault on for 5 cycles, then trip the line in (b) and remove fault.
24	FLT24-3PH	3 phase fault on Woodring 345kV (514715) to Sooner 345kV (514803) CKT1, near Woodring. a. Apply fault at the Woodring 345kV bus. b. Clear fault after 5 cycles and trip the faulted line. c. Wait 20 cycles, and then re-close the line in (b) back into the fault. d. Leave fault on for 5 cycles, then trip the line in (b) and remove fault.
25	FLT25-3PH	3 phase fault on Woodring 345kV (514715) to Hunter 345kV (515476) CKT1, near Woodring. a. Apply fault at the Woodring 345kV bus. b. Clear fault after 5 cycles and trip the faulted line. c. Wait 20 cycles, and then re-close the line in (b) back into the fault. d. Leave fault on for 5 cycles, then trip the line in (b) and remove fault.
26	FLT26-3PH	3 phase fault on the Woodring 345kV (514715) to Woodring 138kV (514714) to Woodring 13.8kV (515770) XFMR CKT 1, near Woodring 345kV. a. Apply fault at the Woodring 345kV bus. b. Clear fault after 5 cycles and trip the faulted transformer.

Cont. No.	Cont. Name	Description
27	FLT27-3PH	3 phase fault on G11-051 Tap 345kV (562075) to Woodward 345kV (515375) CKT1, near G11-051 Tap. a. Apply fault at the G11-051 Tap 345kV bus. b. Clear fault after 5 cycles and trip the faulted line. c. Wait 20 cycles, and then re-close the line in (b) back into the fault. d. Leave fault on for 5 cycles, then trip the line in (b) and remove fault.
28	FLT28-3PH 2025SP Only	3 phase fault on G11-051 Tap 345kV (562075) to Woodward 345kV (515375) CKT 1 and 2, near G11-051 Tap. a. Apply fault at the G11-051 Tap 345kV bus. b. Clear fault after 5 cycles and trip the faulted lines (CKT1 and 2).
29	FLT29-3PH	3 phase fault on Woodward 345kV (515375) to Border 345kV (515458) CKT1, near Woodward. a. Apply fault at the Woodward 345kV bus. b. Clear fault after 5 cycles and trip the faulted line. c. Wait 20 cycles, and then re-close the line in (b) back into the fault. d. Leave fault on for 5 cycles, then trip the line in (b) and remove fault.
30	FLT30-3PH	3 phase fault on Woodward 345kV (515375) to G11-14-Tap 345kV (560000) CKT1, near Woodward. a. Apply fault at the Woodward 345kV bus. b. Clear fault after 5 cycles and trip the faulted line. c. Wait 20 cycles, and then re-close the line in (b) back into the fault. d. Leave fault on for 5 cycles, then trip the line in (b) and remove fault.
31	FLT31-3PH	3 phase fault on Woodward 345kV (515375) to G11-14-Tap 345kV (560000) CKT 1 and 2, near Woodward. a. Apply fault at the Woodward 345kV bus. b. Clear fault after 5 cycles and trip the faulted lines (CKT1 and 2).
32	FLT32-3PH	3 phase fault on Woodward 345kV (515375) to Thistle 345kV (539801) CKT1, near Woodward. a. Apply fault at the Woodward 345kV bus. b. Clear fault after 5 cycles and trip the faulted line. c. Wait 20 cycles, and then re-close the line in (b) back into the fault. d. Leave fault on for 5 cycles, then trip the line in (b) and remove fault.
33	FLT33-3PH	3 phase fault on Woodward 345kV (515375) to Thistle 345kV (539801) CKT 1 and 2, near Woodward. a. Apply fault at the Woodward 345kV bus. b. Clear fault after 5 cycles and trip the faulted lines (CKT1 and 2).
34	FLT34-3PH	3 phase fault on the Woodward 345kV (515375) to Woodward 138kV (515376) to Woodward 13.8kV (515795) XFMR CKT 1, near Woodward 345kV. a. Apply fault at the Woodward 345kV bus. b. Clear fault after 5 cycles and trip the faulted transformer.
35	FLT35-3PH	3 phase fault on Border 345kV (515458) to Tuco 345kV (525832) CKT1, near Border. a. Apply fault at the Border 345kV bus. b. Clear fault after 5 cycles and trip the faulted line. c. Wait 20 cycles, and then re-close the line in (b) back into the fault. d. Leave fault on for 5 cycles, then trip the line in (b) and remove fault.
36	FLT36-3PH	3 phase fault on the Thistle 345kV (539801) to Wichita 345kV (532796) CKT 1, near Thistle. a. Apply fault at the Thistle 345kV bus. b. Clear fault after 5 cycles and trip the faulted line. c. Wait 20 cycles, and then re-close the line in (b) back into the fault. d. Leave fault on for 5 cycles, then trip the line in (b) and remove fault.
37	FLT37-3PH	3 phase fault on the Thistle 345kV (539801) to Wichita 345kV (532796) CKT 1 and 2, near Thistle. a. Apply fault at the Thistle 345kV bus. b. Clear fault after 5 cycles and trip the faulted lines (CKT 1 and 2).

Cont. No.	Cont. Name	Description
38	FLT38-3PH 2015WP & 2015SP Only	3 phase fault Tatonga 345kV (515407) to Northwest 345kV (514880) CKT 1, near Tatonga. a. Apply fault at the Tatonga 345kV bus. b. Clear fault after 5 cycles and trip the faulted line. c. Wait 20 cycles, and then re-close the line in (b) back into the fault. d. Leave fault on for 5 cycles, then trip the line in (b) and remove fault.
39	FLT39-3PH 2025SP	3 phase Tatonga (515407) to Mathewson 345kV (515497) CKT 1, near Tatonga. a. Apply fault at the Tatonga 345kV bus. b. Clear fault after 5 cycles and trip the faulted line. c. Wait 20 cycles, and then re-close the line in (b) back into the fault. d. Leave fault on for 5 cycles, then trip the line in (b) and remove fault.
40	FLT40-3PH	3 phase fault on the Tuttle Conoco Tap 138kV (511425) to Cimarron 138kV (514898) CKT 1, near Tuttle Conoco Tap. a. Apply fault at the Tuttle Conoco Tap 138kV bus. b. Clear fault after 5 cycles and trip the faulted line. c. Wait 20 cycles, and then re-close the line in (b) back into the fault. d. Leave fault on for 5 cycles, then trip the line in (b) and remove fault.
41	FLT11-3PH	3 phase fault on the Cimarron 138kV (514898) to El Reno 138kV (514819) CKT 1, near Cimarron. a. Apply fault at the Cimarron 138kV bus. b. Clear fault after 5 cycles and trip the faulted line. c. Wait 20 cycles, and then re-close the line in (b) back into the fault. d. Leave fault on for 5 cycles, then trip the line in (b) and remove fault.
42	FLT42-3PH	3 phase fault on the Cimarron 138kV (514898) to Jensen Tap 138kV (514820) CKT 1, near Cimarron. a. Apply fault at the Cimarron 138kV bus. b. Clear fault after 5 cycles and trip the faulted line. c. Wait 20 cycles, and then re-close the line in (b) back into the fault. d. Leave fault on for 5 cycles, then trip the line in (b) and remove fault.
43	FLT43-3PH	3 phase fault on the Cimarron 138kV (514898) to Haymaker 138kV (514863) CKT 1, near Cimarron. a. Apply fault at the Cimarron 138kV bus. b. Clear fault after 5 cycles and trip the faulted line. c. Wait 20 cycles, and then re-close the line in (b) back into the fault. d. Leave fault on for 5 cycles, then trip the line in (b) and remove fault.
44	FLT44-3PH	3 phase fault on the Cimarron 138kV (514898) to Czech Hall 138kV (514894) CKT 1, near Cimarron. a. Apply fault at the Cimarron 138kV bus. b. Clear fault after 5 cycles and trip the faulted line. c. Wait 20 cycles, and then re-close the line in (b) back into the fault. d. Leave fault on for 5 cycles, then trip the line in (b) and remove fault.
45	FLT45-3PH	3 phase fault on the Cimarron 138kV (514898) to Sara 138kV (514895) CKT 1, near Cimarron. a. Apply fault at the Cimarron 138kV bus. b. Clear fault after 5 cycles and trip the faulted line. c. Wait 20 cycles, and then re-close the line in (b) back into the fault. d. Leave fault on for 5 cycles, then trip the line in (b) and remove fault.
46	FLT46-PO	**Prior Outage of Cimarron (514901) – Draper (514934) 345kV;** 3 phase fault on the Northwest (514880) - Arcadia (514908) 345kV near Northwest a. Apply fault at the Northwest 345kV bus. b. Clear fault after 5 cycles and trip the faulted line. c. Wait 20 cycles, and then re-close the line in (b) back into the fault. d. Leave fault on for 5 cycles, then trip the line in (b) and remove fault.

Cont. No.	Cont. Name	Description
47	FLT47-PO	**Prior Outage of Northwest (514880) – Arcadia (514908) 345kV;** 3 phase fault on the Cimarron (514901) – Draper (514934) 345kV line near Cimarron a. Apply fault at the Cimarron 345kV bus. b. Clear fault after 5 cycles and trip the faulted line. c. Wait 20 cycles, and then re-close the line in (b) back into the fault. d. Leave fault on for 5 cycles, then trip the line in (b) and remove fault.
48	FLT48-SB	**Stuck Breaker at Cimarron (514901)** Apply single phase fault at Cimarron 345kV bus. b. Clear fault after 16 cycles and trip the following elements c. Cimarron (514901)-Draper (514934) 345kV line d. Cimarron (514901)-Northwest (514880) 345kV line.
49 *	FLT49-PO 2015SP and 2015WP only	**Prior Outage of Woodward (515375)-Thistle (539801) 345kV:** 3 phase fault on Tatonga (515407) – Northwest (514880) 345kV line near Tatonga. a. Apply fault at the Tatonga 345kV bus. b. Clear fault after 5 cycles and trip the faulted line.
50	FLT50-PO	**Prior Outage of Woodward (515375)-GEN-2011-051 (562075) 345kV:** 3 phase fault on the Northwest (514880) – Arcadia (514908) near Northwest a. Apply fault at the Northwest 345kV bus. b. Clear fault after 5 cycles and trip the faulted line.

***Only one of the transmission lines between Woodward and Thistle was disconnected as prior outage.**

Single- line-to-ground faults were simulated with the standard method of applying fault impedance to the positive sequence network to represent the effect of the negative and zero sequence networks on the positive sequence network. The SLG fault impedance was computed by assuming a positive sequence voltage at the fault location at approximately 60% of pre-fault voltage, which is a typical value.

The Southwest Pool Disturbance Performance Criteria Requirements in Appendix A were used to evaluate the system response during the initial transient period following a disturbance on the system. Generator response and bus voltages (115 kV and above) in Area 520, 524, 525, 526, 531, 534, and 536 were monitored to ensure the system performance meets criteria requirements. Rotor angles of the nearby synchronous machines were investigated to make sure they maintained synchronism and had adequate damping following system faults.

Any wind generator must comply with FERC Order 661A on low voltage ride through requirements for wind farms. Therefore, the wind generators should not be tripped off line for faults by under voltage relay actuation. Generator speed of pre-queued projects was also monitored to ensure they stay online under system contingencies. For contingencies that result in a prior queued project tripping off-line; the contingency shall be re-run with the prior queued project's voltage and frequency tripping disabled.

2.2 STUDY RESULTS

The results of all studied disturbances show **no** instability problems or voltage violations for all three seasons (see Table 2-2: Summary of Results). All generators in the studied system are kept online without tripping following all simulated faults.

Table 2-2 Study Results Summary

Contingency	2015SP	2015WP	2025SP
FLT01-3PH	Stable	Stable	Stable
FLT02-3PH	Stable	Stable	Stable
FLT03-3PH	Stable	Stable	Stable
FLT04-3PH	Stable	Stable	Stable
FLT05-3PH	N/A	N/A	Stable
FLT06-3PH	Stable	Stable	Stable
FLT07-3PH	Stable	Stable	Stable
FLT08-3PH	Stable	Stable	Stable
FLT09-3PH	Stable	Stable	Stable
FLT10-3PH	Stable	Stable	Stable
FLT11-3PH	Stable	Stable	Stable
FLT12-3PH	Stable	Stable	Stable
FLT13-3PH	N/A	N/A	Stable
FLT14-3PH	Stable	Stable	Stable
FLT15-3PH	N/A	N/A	Stable
FLT16-3PH	N/A	N/A	Stable
FLT17-3PH	Stable	Stable	Stable
FLT18-3PH	Stable	Stable	Stable
FLT19-3PH	N/A	N/A	Stable
FLT20-3PH	Stable	Stable	Stable
FLT21-3PH	N/A	N/A	Stable
FLT22-3PH	Stable	Stable	Stable
FLT23-3PH	Stable	Stable	Stable
FLT24-3PH	Stable	Stable	Stable
FLT25-3PH	Stable	Stable	Stable
FLT26-3PH	Stable	Stable	Stable
FLT27-3PH	Stable	Stable	Stable
FLT28-3PH	N/A	N/A	Stable
FLT29-3PH	Stable	Stable	Stable
FLT30-3PH	Stable	Stable	Stable
FLT31-3PH	Stable	Stable	Stable
FLT32-3PH	Stable	Stable	Stable
FLT33-3PH	Stable	Stable	Stable
FLT34-3PH	Stable	Stable	Stable
FLT35-3PH	Stable	Stable	Stable
FLT36-3PH	Stable	Stable	Stable
FLT37-3PH	Stable	Stable	Stable
FLT38-3PH	Stable	Stable	N/A
FLT39-3PH	N/A	N/A	Stable
FLT40-3PH	Stable	Stable	Stable
FLT41-3PH	Stable	Stable	Stable
FLT42-3PH	Stable	Stable	Stable
FLT43-3PH	Stable	Stable	Stable

Contingency	2015SP	2015WP	2025SP
FLT44-3PH	Stable	Stable	Stable
FLT45-3PH	Stable	Stable	Stable
FLT46-PO	Stable	Stable	Stable
FLT47-PO	Stable	Stable	Stable
FLT48-SB	Stable	Stable	Stable
FLT49-PO	Stable	Stable	N/A
FLT50-PO	Stable	Stable	Stable

Figure 2-1 shows the response of the studied generator following fault FLT01-3PH for 2015 Summer Peak case. The machine speed, active and reactive power output and terminal voltage are plotted to show the generator response. All the simulation plots are included in Appendix B.

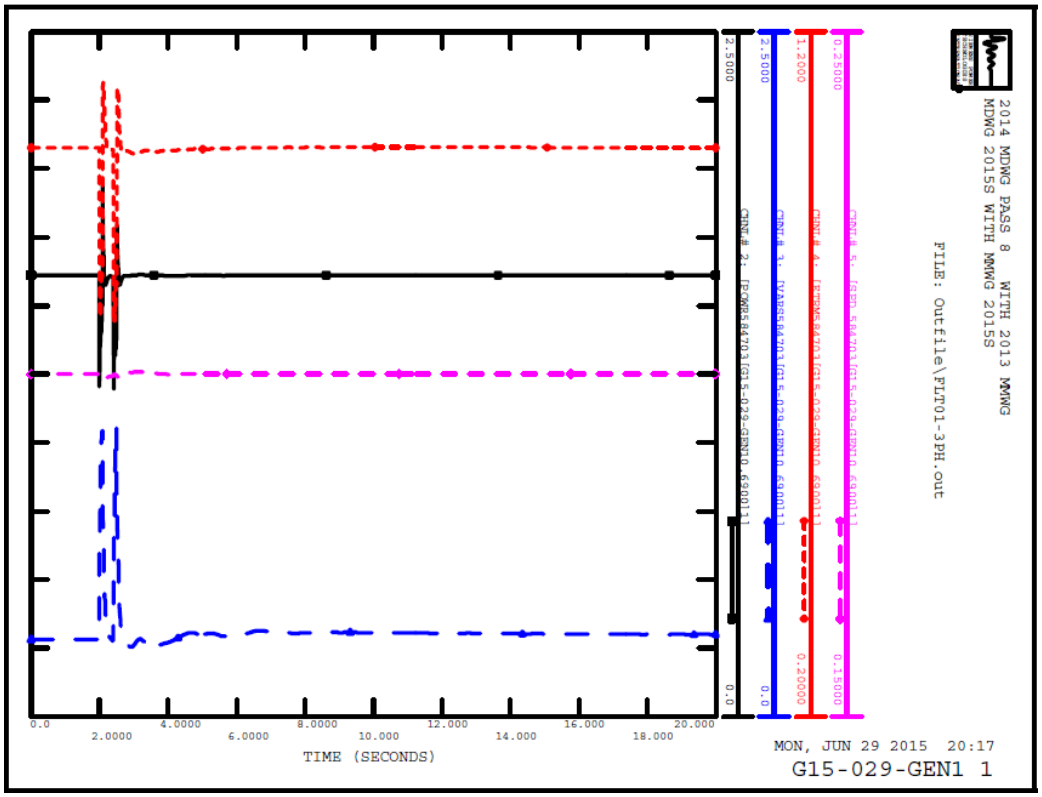

Figure 2-1 GEN-2015-029 Response Following Fault FLT01-3PH for 2015 Summer Peak Case

3 SHORT CIRCUIT ANALYSIS

Short circuit analysis was performed on the 2025 Summer Peak power flow case using the PSS/E program. Since the power flow model does not contain negative and zero sequence data, only three-phase symmetrical fault current levels were calculated at up to five buses away from the point of interconnection.

Table 3-1 tabulates all the three-phase fault current levels, and the calculated values were listed here for SPP's reference.

Table 3-1 Three-Phase Fault Currents

Number	Name	3PH(Amp)	Number	Name	3PH(Amp)
525824	TUCO_TR1 113.200	31857.5	514852	SLVRLAK4 138.00	31637.4
525825	TUCO_TR2 113.200	23936.2	514853	DVISION4 138.00	34309.8
515576	RANCHRD7 345.00	13065.1	514854	BRADEN 4 138.00	30485
525830	TUCO_INT 6230.00	22743.3	521006	MARSHAL4 138.00	7739.8
525832	TUCO_INT 7345.00	12198.6	515375	WWRDEHV7 345.00	20032
531469	SPERVIL7 345.00	14624	515376	WWRDEHV4 138.00	25604.1
515757	SEMINO21 14.400	23361.9	512817	CLEVLND1 13.800	12436
515600	KNGFSHR7 345.00	11016.7	584500	GEN-2015-006345.00	11313.3
515601	KNGFSR11 34.500	30625.3	583990	GEN-2014-049345.00	8028
515602	KNGFSR12 34.500	30716	583991	G14-049XFMR134.500	24691.4
515603	KNGFSRT1 13.800	53721	514873	LNEOAK 4 138.00	26399.9
525844	ELK_1 118.000	43931.8	515484	CHSHMVW1 34.500	18135.5
515605	CANADN7 345.00	11318.9	532796	WICHITA7 345.00	25093.2
515606	CANDN11 34.500	18886.7	515722	EL RENO1 13.200	9832.5
515607	CANDN12 34.500	19232	532798	VIOLA 7 345.00	13894
515608	CANDNT1 13.800	34483.7	514879	NORTWST4 138.00	41369.9
515609	CANDNT2 13.800	34883.9	514880	NORTWST7 345.00	29635.6
515610	FSHRTAP7 345.00	15945.1	514881	SPRNGCK7 345.00	21472.4
515621	OPENSKY7 345.00	11745.3	515394	KEENAN 4 138.00	9165.1
584660	G1524&G1525 345.00	5206.9	514883	SPGCK3&4 13.800	78628.4
573501	GEN-2008-047345.00	13596.5	515396	OUSPRT T 9.9600	31057
511553	CHISHOLM7 345.00	5481.3	514885	NORTWS41 13.800	49733.1
512694	CLEVLND7 345.00	14597	515398	OUSPRT 4 138.00	9762.9
583750	GEN-2013-029345.00	11568	514893	XEROX 4 138.00	27357.4
582219	G11-019-GSU134.500	35152.5	514894	CZECHAL4 138.00	26514.7
582220	G11-020-GSU134.500	35187.8	515407	TATONGA7 345.00	16200.8
514949	SOONRTP4 138.00	20947.5	515408	CRSRDX-WTG2 0.6900	130484.2
583760	GEN-2013-030345.00	12355	515409	CRSRDX-CB2 34.500	12441.3

Number	Name	3PH(Amp)	Number	Name	3PH(Amp)
539803	IRONWOOD7 345.00	14144.4	514898	CIMARON4 138.00	40536.3
526936	YOAKUM_345 345.00	9430.2	514899	REDBUD1S 18.000	80094.5
515224	MUSKOGE7 345.00	28535.2	514900	REDBUD2S 18.000	80094.5
514863	HAYMAKR4 138.00	25741.8	514901	CIMARON7 345.00	30175.9
510907	PITTSB-7 345.00	13328.7	509782	R.S.S.-7 345.00	30060
300138	4CLEVLND 138.00	15847.3	514905	REDBUD3S 18.000	80094.5
515700	ARCADI41 13.800	68661.8	514906	JNSKAMO4 138.00	20474.4
515703	ARCADI21 13.800	49229	514907	ARCADIA4 138.00	39777.4
515704	ARCADI31 13.800	45074.7	514908	ARCADIA7 345.00	24649.2
515604	KNGFSRT2 13.800	53836.6	514909	REDBUD 7 345.00	23713
525845	ELK_4 1 18.000	43921.4	514910	REDBUD1G 18.000	76945.9
515714	CIMARO11 13.800	37192.4	514911	REDBUD2G 18.000	76945.9
515715	CIMARO21 13.800	51965.6	514912	REDBUD3G 18.000	76945.9
515720	DRAPER31 13.800	49636.4	515042	SEMINL3G 20.900	188899.6
515721	DRAPER41 13.800	49636.4	584060	GEN-2014-056345.00	8216.4
515785	WINDFRM4 138.00	18897.8	515443	MNCOWND1 34.500	28201.3
560010	G14-037-TAP 345.00	16917	515444	MCNOWND7 345.00	16007.5
514703	FAIRMNT4 138.00	10676.1	514933	DRAPER 4 138.00	39253.1
514704	MILLERT4 138.00	20369	514934	DRAPER 7 345.00	21319.6
514707	PERRY 4 138.00	11028.1	515447	MORISNT4 138.00	13499.9
514708	OTTER 4 138.00	9547.4	515448	CRSRDSW7 345.00	11513.8
514709	FRMNTAP4 138.00	16651	515449	CRSRDW11 34.500	16663.7
514710	WAUKOMI4 138.00	9401.3	515450	CRSRDW21 34.500	17588.1
514711	WAUKOTP4 138.00	14703.4	515451	CRSRDWT1 13.800	27016.7
539800	CLARKCOUNTY7345.00	12740.9	515452	CRSRDWT2 13.800	27888.4
539801	THISTLE7 345.00	15999.2	514942	REDBUD4G 18.000	40225.7
514714	WOODRNG4 138.00	17991	560000	G11-14-TAP 345.00	14627
514715	WOODRNG7 345.00	16837	515392	KEENAN T 9.9600	38823.5
539804	THISTLE4 138.00	16889.2	515458	BORDER 7345.00	5117.1
515742	NORTWS21 13.800	49909.2	582019	GEN-2011-019345.00	20032
515743	NORTWS31 13.800	49841.2	582020	GEN-2011-020345.00	20032
514731	SO4TH 4 138.00	14288.2	515461	RNDBARN4 138.00	37952.4
515756	SEMINO11 14.400	38203.9	515393	KEENAN 1 34.500	16196.3
514733	MARSHL 4 138.00	7775.7	515465	LGARBER4 138.00	21025.5
515760	SOONER 1 13.800	42594.5	515466	MITCHSB4 138.00	21133.7
579253	G07-21&14-02345.00	13466.6	515479	CHSHMVE1 34.500	17905.7
579254	G0721&1402X134.500	25640.4	514882	SPGCK1&2 13.800	116919.2

Number	Name	3PH(Amp)	Number	Name	3PH(Amp)
579255	G0721&1402S134.500	24351.2	515471	NW164TH4 138.00	34363.4
579256	G0721&1402G10.6900	1023890.4	514961	GM 4 138.00	19426.1
515770	WOODRNG1 13.800	24428.6	515476	HUNTERS7 345.00	12747.3
515771	WOODWR21 13.200	20608.5	515477	CHSHLMV7 345.00	12729.8
583370	GEN-2012-024345.00	10181.9	514713	WRVALLY4 138.00	8733.8
515445	MNCOWNDT 13.800	49945.9	515481	STHLAKE4 138.00	20865.4
579268	G07-44&14-03345.00	9112.1	515482	CHSHMVET 13.200	38607
579269	G0744&1403X134.500	24972.9	562075	G11-051-TAP 345.00	16558.1
579270	G0744&1403S134.500	23769.2	509852	T.NO.--7 345.00	23284.5
579271	G0744&1403G10.6900	1006036.8	539802	THISTLE T1 13.800	8421.2
579272	G0744&1403HV345.00	9112.1	515397	OUSPRT 1 34.500	13701.6
579273	G0744&1403X234.500	14737	560033	G1524&G1525T345.00	19836.8
579274	G0744&1403S234.500	13630.4	560027	G14-074-TAP 345.00	6576.8
579275	G0744&1403G20.6900	555919.4	515497	MATHWSN7 345.00	28604.1
515792	DRAPER21 13.800	69887	515485	CHSHMVWT 13.200	38542.8
582008	GEN-2011-008345.00	10301.3	583090	G1149&G1504 345.00	4687
515795	WWDEHV31 13.800	61875.2	583091	G11-049XFMR134.500	15518.9
515799	WWDEHV21 13.800	61535.2	583094	G1149&1504X234.500	15546.5
515800	GRACMNT7 345.00	14628	515003	BARNES 4 138.00	16155.5
515801	GRCMNT11 13.800	45843.3	511424	T-CONCO4 138.00	7032.1
515802	GRACMNT4 138.00	28567.9	511425	TUTCONT4 138.00	10835.8
514782	WODWRD 2 69.000	12099.1	583110	GEN-2011-051345.00	16558.1
514783	WOODWR11 24.900	25453.1	583111	G11-051XFMR134.500	20652.1
514785	WOODWRD4 138.00	20901	583112	G11-051-GSU134.500	20178.2
514787	DEWEY 4 138.00	6627.9	583113	G11-051-GEN10.6900	933665.8
514940	REDBUD4S 18.000	80089.6	514001	CRSRD-WTG1 0.6900	589028.8
514796	IODINE-4 138.00	7201.4	514002	CRSRD-CB1 34.500	15180.6
514798	SNRPMPT4 138.00	20414.5	514003	CRSRD-WTG2 0.6900	659051.1
514801	MINCO 7 345.00	16051.4	514004	CRSRD-CB2 34.500	16318.7
514802	SOONER 4 138.00	30977.5	515543	RENFROW7 345.00	13173.7
514803	SOONER 7 345.00	22864.6	515544	RENFROW4 138.00	14650.5
514805	SOONER1G 22.000	178145.7	515545	RENFRO11 13.800	50467.6
514806	SOONER2G 20.000	201326.8	514895	SARA 4 138.00	18809.1
514851	QUAILCK4 138.00	28631.1	515549	MNCWND37 345.00	11166
583490	GEN-2012-041345.00	11568.2	515550	MNCWND31 34.500	25084.9
584450	GEN-2015-001345.00	13065.1	515551	MNCWND3T 13.800	45721
514819	EL-RENO4 138.00	15271.2	511501	TUTTLE4 138.00	10728.2

Number	Name	3PH(Amp)	Number	Name	3PH(Amp)
514820	JENSENT4 138.00	15163	515041	SEMINL2G 17.100	194722.2
514821	JENSEN 4 138.00	10773.9	515554	BVRCNTY7 345.00	16237.1
514823	ROMNOSE4 138.00	4084.6	515044	SEMINOL4 138.00	58223.4
514827	CTNWOOD4 138.00	16391.7	515045	SEMINOL7 345.00	28250.8
514828	KETCHTP4 138.00	26002.5	582119	G11-019XFMR134.500	37089.7
514946	MIDWEST4 138.00	31254.9	582120	G11-020XFMR134.500	37112.1
514834	KETCH 4 138.00	26449	584170	GEN-2014-064138.00	9476.5
584470	GEN-2015-003345.00	9709	511468	L.E.S.-7 345.00	12132.4
579351	GEN-2007-062345.00	8609.6	578542	GEN-2010-001345.00	13297.2
579352	G07-062XFMR134.500	20725.9	584690	GEN-2015-030345.00	17765.8
579353	G07-062-GSU134.500	20123	584691	G15-030XFMR134.500	26430.5
514818	ELRENO 2 69.000	7323	539638	FLATRDG3 138.00	15180.1
579355	G07-062XFMR234.500	20626.1	581112	GEN-2011-014345.00	10788.7
579356	G07-062-GSU234.500	19540	581113	G11-014XFMR134.500	23605.4
579358	G07-062-HV-2345.00	6591.1	584700	GEN-2015-029345.00	9754.6
579359	G07-062XFMR334.500	24076.8	584701	G15-029XFMR134.500	18913.7
514864	PIEDMNT4 138.00	22140.3	584702	G15-029-GSU134.500	18898.8
579362	G07-062XFMR434.500	24144	584703	G15-029-GEN10.6900	787971.8
515363	CENT 4 138.00	4014.1			

4 POWER FACTOR ANALYSIS

Since the studied project is a renewable energy project, power factor analysis was performed on three provided cluster scenarios upon SPP's request.

4.1 POWER FACTOR ANALYSIS METHODOLOGY

Power Factor Analysis was performed for the studied wind farm under system intact and contingency conditions. All stability faults shown in Table 2-1 were analyzed as power flow contingencies. The power factor requirements for the wind farm were determined to maintain the voltage at the POI to the schedule voltage which is the higher of the POI voltage in the provided base case or 1.0 per unit. Fictitious var generator was added to the studied wind farm to maintain the scheduled voltage following all studied contingencies. The MW and Mvar injections from the studied wind farm at the POI were recorded and the power factors were calculated for all contingencies. The most lagging and most leading power factors determine the minimum power factor range capability required for the studied wind farm.

If more than one studied project share the same POI, the projects were grouped together and common power factor requirements were determined for this group of studied projects. With this method, none of the studied projects is required to provide more or less than its fair share of the reactive power requirements at the same POI. If a prior-queued project is connected at the same POI as the studied project, the prior-queued project was not grouped with the studied project since its reactive power requirements was determined in previous studies. However, the voltage schedules of the prior-queued project and the studied project at the same POI were coordinated and the local existing capacitor banks were set to their maximum capability, if necessary.

Per FERC and SPP requirements, if the power factor needed to maintain the scheduled voltage is less than 0.95 lagging or leading, the requirements is limited to 0.95 lagging or leading.

If the required power factor at the POI is beyond the capability of the studied wind turbine, the approximate size of the additional capacitors were determined.

4.2 STUDY RESULTS

Table 4-1 summarizes the power factor analysis results. It is shown in the table that a 17MVAr capacitor bank is required on the wind farm's substation 34.5kV bus (584701) for 2015 summer peak case, and an 18MVAr capacitor bank is required for the 2015 winter peak case. No additional capacitor bank is needed for the 2025 summer peak case. These capacitor bank sizes are only estimates based on the information provided by the Interconnection Customer for its collector system design. Final needs will be based on final designs of the collector system determined by the Interconnection Customer to meet the power factor requirement.

Stability results show that the additional reactive power resources are not required to be dynamically controlled. However, any change in wind turbine model could change the stability results, which may show a need for dynamically controlled reactive power devices.

The detailed power factor analysis results for each studied contingency are provided in Appendix C.

Table 4-1 Power Factor Analysis Results

Request	Size (MW)	Generator Model	POI	Scenario	Final PF Requirement		Capacitor Requirement (Mvar)3
					Leading[1]	Lagging[2]	
GEN-2015-029	161	GE 2.3MW	Tatonga 345kV (515407)	15SP	1.0	0.950	17
				15WP	1.0	0.950	18
				25SP	0.998	0.983	N/A

Notes:
1. Leading is when the generator is absorbing reactive power from the transmission grid.
2. Lagging is when the generator is providing reactive power to the transmission grid.
3. Approximate sizes as discussed in this report Section 4.

5 LOW WIND/NO WIND ANALYSIS

In this study, ABB investigated the GEN-2015-029 project for low wind/no wind conditions, since the interconnected wind farm is connected to a 345kV bus.

5.1 LOW/NO WIND ANALYSIS METHODOLOGY

Low wind/No wind analysis is performed to determine the required shunt reactor size at the study project substation high side bus to bring the MVAr flow into the POI down to approximately zero.

For each studied scenario, the studied wind generator and capacitor bank (none in this case) was switched out of service with the collector system as modeled remaining in service. The resulting reactive power injection into the transmission network coming from the capacitance of the project's transmission lines and collector cables was measured. Then, the required shunt reactor size was calculated to bring the MVAr flow into the POI down to approximately zero.

5.2 STUDY RESULTS

Table 5-1 summaries the Low/No Wind analysis results. It is shown that 13.41 MVAr shunt reactor at the substation high side bus (584700) is required to bring the MVAr flow in the POI down to approximately zero under low/no wind conditions for all three studied seasons. This reactor bank size is approximate to be finalized during final facility and collector system design.

Table 5-1 Low/No Wind Analysis Results

Scenario	Reactive Power Injection at POI (MVAr)	Bus 584700 Volt (pu)	Required Shunt Reactor (MVAr)
15SP	13.41	1.0002	**13.41**
15WP	13.30	0.9961	**13.41**
25SP	13.86	1.0167	**13.41**

6 CONCLUSIONS

Southwest Power Pool (SPP) has commissioned ABB Inc., to perform a Definitive Impact Study for DISIS-2015-001 (Group 01) which includes generation interconnection request GEN-2015-029 (161 MW wind farm connected at the Tatonga 345 kV substation).

Request	Size (MW)	Generator Model	POI
GEN-2015-029	161	GE 2.3MW	Tatonga 345kV (515407)

The objective of this study is to evaluate the impact of project GEN-2015-029 on the existing and future planning system. The study is performed on three system scenarios provided by SPP:

- 2015 Summer Peak Case
- 2015 Winter Peak Case
- 2025 Summer Peak Case

Results of the stability analysis show that the studied system is stable following all simulated faults with the proposed GEN-2015-029 project in-service. There are no voltage violations in the monitored area and the local synchronous generators show good damping performance which meets the criteria specified.

System short-circuit current levels at up to five buses away from the point of interconnection were calculated and tabulated for SPP's reference.

Power Factor Analysis was performed to ensure the studied project meets FERC and SPP power factor requirements for wind farm interconnections. The results show that a 17MVAr capacitor bank is required on the wind farm's substation 34.5kV bus for 2015 summer peak case, an 18MVAr capacitor bank is required for the 2015 winter peak case, and no capacitor bank is required for 2025 summer peak case. These capacitor bank sizes are only estimates based on the information provided by the Interconnection Customer for its collector system design. Final needs will be based on final designs of the collector system determined by the Interconnection Customer to meet the power factor requirement.

The Low/No Wind analysis shows that a 13.41 MVAr shunt reactor is required to bring the MVAr flow in the POI down to approximate zero under low/no wind conditions for all three studied seasons. The reactor bank size is approximate and the final size will be determined in the final facility and collector system design.

Based on the results of stability analysis it can be concluded that **the proposed GEN-2015-029 project does not adversely impact the stability of the SPP system**.

The results of this analysis are based on available data and assumptions made at the time of conducting this study. If any of the data and/or assumptions made in developing the study model change, the results provided in this report may not apply.

APPENDIX A SOUTHWEST POWER POOL DISTURBANCE PERFORMANCE CRITERIA REQUIREMENTS

OVERVIEW

These Disturbance Performance Requirements ("Requirements") shall be applicable to the Bulk Electric System within the Southwest Power Pool Planning Area. Utilization of these Requirements applies to all registered entities within the Southwest Power Pool Planning Area. These Requirements shall not be applicable to facilities that are not part of Bulk Electric System. More stringent Requirements are at the sole discretion of each Transmission Owner.

Transient and dynamic stability assessments are generally performed to assure adequate avoidance of loss of generator synchronism and prevention of system voltage collapse within the first 20 seconds after a system disturbance. These Requirements provide a basis for evaluating the system response during the initial transient period following a disturbance on the Bulk Electric System by establishing minimum requirements for machine rotor angle damping and transient voltage recovery.

ROTOR ANGLE DAMPING REQUIREMENT

Machine Rotor Angles shall exhibit well damped angular oscillations [as defined below] and acceptable power swings following a disturbance on the Bulk Electric System for all NERC Category A, B and C events.

Well damped angular oscillations shall meet one of the following two requirements when calculated directly from the rotor angle:

1. Successive Positive Peak Ratio (SPPR) must be less than or equal to 0.95 where SPPR is calculated as follows:

$$\text{SPPR} = \frac{\text{Peak Rotor Angle of 2}^{\text{nd}}\text{ Positive Swing Peak}}{\text{Peak Rotor Angle of 1}^{\text{st}}\text{ Positive Swing Peak}} \leq 0.95$$

-or- Damping Factor % = (1 – SPPR) x 100% $\geq$ 5%

The machine rotor angle damping ratio may be determined by appropriate modal analysis (i.e. Prony Analysis) where the following equivalent requirement must be met:

Damping Ratio $\geq$ 0.0081633

2. Successive Positive Peak Ratio Five (SPPR5) must be less than or equal to 0.774 where SPPR5 is calculated as follows:

$$\text{SPPR5} = \frac{\text{Peak Rotor Angle of 5}^{th}\text{ Positive Swing Peak}}{\text{Peak Rotor Angle of 1}^{st}\text{ Positive Swing Peak}} \leq 0.774$$

-or- Damping Factor % = (1 – SPPR5) x 100% $\geq$ 22.6%

The machine rotor angle damping ratio may be determined by appropriate modal analysis (i.e. Prony Analysis) where the following equivalent requirement must be met:

Damping Ratio $\geq$ 0.0081633

Qualitatively, these Requirements are shown in Figure 1 below.

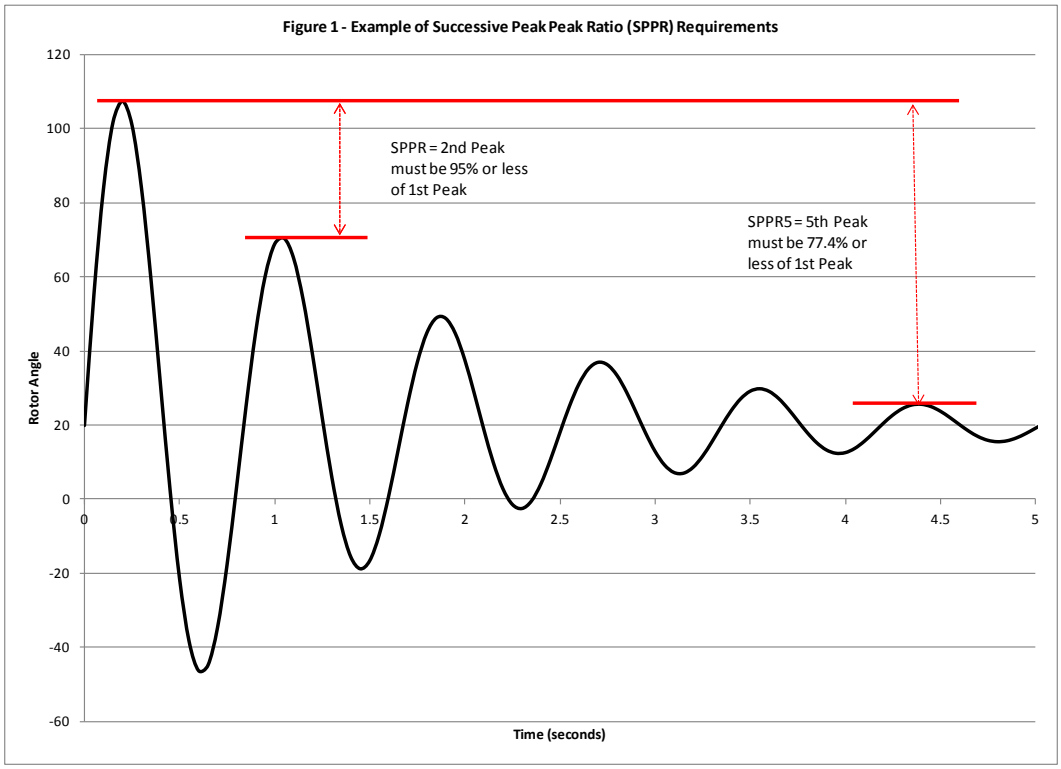

TRANSIENT VOLTAGE RECOVERY REQUIREMENT

Any time after a disturbance is cleared; bus voltages on the Bulk Electric System shall not swing outside of the bandwidth of 0.70 per unit to 1.20 per unit.

Qualitatively, this Requirement is shown in Figure 2 below.

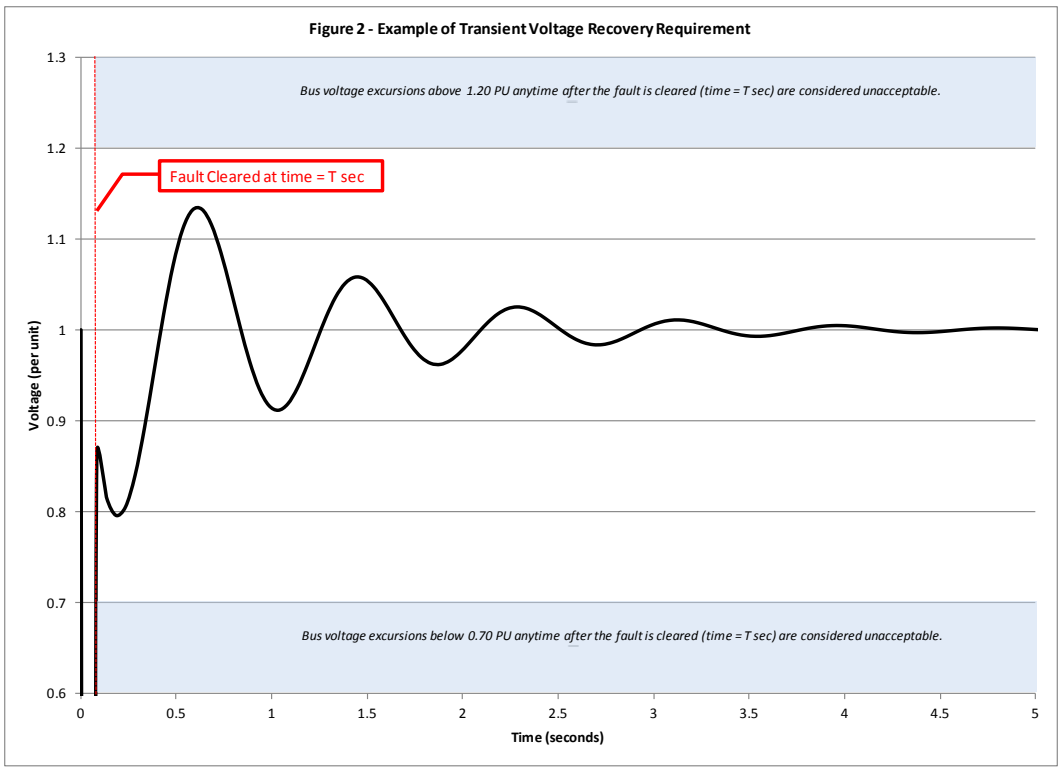
Figure 2 - Example of Transient Voltage Recovery Requirement
Bus voltage excursions above 1.20 PU anytime after the fault is cleared (time = T sec) are considered unacceptable.
Fault Cleared at time = T sec
Bus voltage excursions below 0.70 PU anytime after the fault is cleared (time = T sec) are considered unacceptable.
Voltage (per unit)
1.3
1.2
1.1
1
0.9
0.8
0.7
0.6
0
0.5
1
1.5
2
2.5
3
3.5
4
4.5
5
Time (seconds)

APPENDIX B SIMULATION PLOTS FOR STABILITY ANALYSIS

APPENDIX C POWER FACTOR ANALYSIS RESULTS

Appendix C – Power Factor Analysis Results

All the contingency numbers shown in this appendix match with the fault numbers shown in Table 2-1.

C.1 GEN-2015-029 2015 Summer Peak Case

The GEN-2015-029 POI voltage is 0.9957 pu in the provided 2015 summer peak case. Therefore, the power factor requirements for the wind farm were determined to maintain the voltage at the POI to 1.0 per unit. The lowest lagging and leading power factors are highlighted in the table below.

Outage No.		MW	Mvar	PF	
System Intact	0	-159	-5.1	0.999	lagging
Contingency	1	-159	-8.5	0.999	lagging
Contingency	2	-159	-5.4	0.999	lagging
Contingency	3	-159	-5.3	0.999	lagging
Contingency	4	-159	-5.5	0.999	lagging
Contingency	6	-159	-4.7	1	lagging
Contingency	7	-159	-4	1	lagging
Contingency	8	-159	-9.9	0.998	lagging
Contingency	9	-159	-6.3	0.999	lagging
Contingency	10	-159	-3.9	1	lagging
Contingency	11	-159	-5.3	0.999	lagging
Contingency	12	-159	-5.3	0.999	lagging
Contingency	14	-159	-5.4	0.999	lagging
Contingency	17	-159	-10.9	0.998	lagging
Contingency	18	-159	-4.2	1	lagging
Contingency	20	-159	-5.1	0.999	lagging
Contingency	22	-159	-5.9	0.999	lagging
Contingency	23	-159	-4.8	1	lagging
Contingency	24	-159	-5.1	0.999	lagging
Contingency	25	-159	-5.6	0.999	lagging
Contingency	26	-159	-4.7	1	lagging
Contingency	27	-159	-16.3	0.995	lagging
Contingency	29	-159	-10.1	0.998	lagging
Contingency	30	-159	-7.7	0.999	lagging
Contingency	31	-159	-14.8	0.996	lagging
Contingency	32	-159.1	-20.3	0.992	lagging
Contingency	33	-159	-83.6	**0.885**	lagging
Contingency	34	-159	-5	1	lagging
Contingency	35	-159	-7.8	0.999	lagging
Contingency	36	-159	-9.1	0.998	lagging
Contingency	37	-159.1	-26.6	0.986	lagging

Outage No.		MW	Mvar	PF	
Contingency	38	-159	-8.5	0.999	lagging
Contingency	40	-159	-5.1	0.999	lagging
Contingency	41	-159	-5.1	0.999	lagging
Contingency	42	-159	-5	1	lagging
Contingency	43	-159	-5.5	0.999	lagging
Contingency	44	-159	-5.4	0.999	lagging
Contingency	45	-159	-5	1	lagging
Contingency	46	-159	-6.6	0.999	lagging
Contingency	47	-159	-6.6	0.999	lagging
Contingency	49	-159	-21.3	0.991	lagging
Contingency	50	-159	-18.4	0.993	lagging

C.2 GEN-2015-029 2015 Winter Peak Case

The GEN-2015-029 POI voltage is 0.9919 pu in the provided 2015 winter peak case. Therefore, the power factor requirements for the wind farm were determined to maintain the voltage at the POI to 1.0 per unit. The lowest lagging and leading power factors are highlighted in the table below.

Outage No.		MW	Mvar	PF	
System Intact	0	-159	-10.3	0.998	lagging
Contingency	1	-159	-13.9	0.996	lagging
Contingency	2	-159	-11.6	0.997	lagging
Contingency	3	-159	-10.7	0.998	lagging
Contingency	4	-159	-11.4	0.997	lagging
Contingency	6	-159	-9.8	0.998	lagging
Contingency	7	-159	-9.1	0.998	lagging
Contingency	8	-159	-12.7	0.997	lagging
Contingency	9	-159	-12.8	0.997	lagging
Contingency	10	-159	-8.8	0.998	lagging
Contingency	11	-159	-10.7	0.998	lagging
Contingency	12	-159	-10.6	0.998	lagging
Contingency	14	-159	-11.2	0.998	lagging
Contingency	17	-159	-12.8	0.997	lagging
Contingency	18	-159	-9.5	0.998	lagging
Contingency	20	-159	-10.2	0.998	lagging
Contingency	22	-159	-12.6	0.997	lagging
Contingency	23	-159	-9.9	0.998	lagging
Contingency	24	-159	-10.3	0.998	lagging
Contingency	25	-159	-10.9	0.998	lagging
Contingency	26	-159	-10.1	0.998	lagging

Outage No.		MW	Mvar	PF	
Contingency	27	-159	-18.3	0.993	lagging
Contingency	29	-159.1	-16.5	0.995	lagging
Contingency	30	-159	-12.7	0.997	lagging
Contingency	31	-159	-18.2	0.994	lagging
Contingency	32	-159.1	-27.2	0.986	lagging
Contingency	33	-158.8	-129.2	**0.776**	lagging
Contingency	34	-159	-10.2	0.998	lagging
Contingency	35	-159	-14.1	0.996	lagging
Contingency	36	-159	-14.4	0.996	lagging
Contingency	37	-159.1	-33.5	0.978	lagging
Contingency	38	-159	-10.4	0.998	lagging
Contingency	40	-159	-10.3	0.998	lagging
Contingency	41	-159	-10.4	0.998	lagging
Contingency	42	-159	-10.3	0.998	lagging
Contingency	43	-159	-10.6	0.998	lagging
Contingency	44	-159	-10.7	0.998	lagging
Contingency	45	-159	-10.3	0.998	lagging
Contingency	46	-159	-13.6	0.996	lagging
Contingency	47	-159	-13.6	0.996	lagging
Contingency	49	-159.1	-25.3	0.988	lagging
Contingency	50	-159.1	-22	0.991	lagging

C.3 GEN-2015-029 2025 Summer Peak Case

The GEN-2015-029 POI voltage is 1.0135 pu in the provided 2025 summer peak case. Therefore, the power factor requirements for the wind farm were determined to maintain the voltage at the POI to 1.0135 pu per unit. The lowest lagging and leading power factors are highlighted in the table below.

Outage No.		MW	Mvar	PF	
System Intact	0	-159	9.1	0.998	leading
Contingency	1	-159.1	4.2	1	leading
Contingency	2	-159	8.7	0.999	leading
Contingency	3	-159	8.8	0.998	leading
Contingency	4	-159	9.3	0.998	leading
Contingency	5	-159	9.3	0.998	leading
Contingency	6	-159	10.2	0.998	leading
Contingency	7	-159.1	7.9	0.999	leading
Contingency	8	-159.1	4.4	1	leading
Contingency	9	-159	9.1	0.998	leading
Contingency	10	-159	10.2	0.998	leading

Outage No.		MW	Mvar	PF	
Contingency	11	-159	8.3	0.999	leading
Contingency	12	-159	8.5	0.999	leading
Contingency	13	-159	9.4	0.998	leading
Contingency	14	-159.1	7.1	0.999	leading
Contingency	15	-159	10.7	0.998	leading
Contingency	16	-159.1	-0.2	1	lagging
Contingency	17	-159.1	1.4	1	leading
Contingency	18	-159	9.3	0.998	leading
Contingency	19	-159	9	0.998	leading
Contingency	20	-159	9.1	0.998	leading
Contingency	21	-159	10	0.998	leading
Contingency	22	-159	8.2	0.999	leading
Contingency	23	-159	9	0.998	leading
Contingency	24	-159	8.9	0.998	leading
Contingency	25	-159	8.4	0.999	leading
Contingency	26	-159	10.2	0.998	leading
Contingency	27	-159.1	3.9	1	leading
Contingency	28	-159.1	2.3	1	leading
Contingency	29	-159.1	0.5	1	leading
Contingency	30	-159.1	5.3	0.999	leading
Contingency	31	-159.1	-3.9	1	lagging
Contingency	32	-159.1	-4.2	1	lagging
Contingency	33	-159.1	-29.3	**0.983**	lagging
Contingency	34	-159	10	0.998	leading
Contingency	35	-159.1	4.6	1	leading
Contingency	36	-159.1	6.9	0.999	leading
Contingency	37	-159.1	-3.1	1	lagging
Contingency	39	-159.1	0.7	1	leading
Contingency	40	-159	9.4	0.998	leading
Contingency	41	-159	9.2	0.998	leading
Contingency	42	-159	9.3	0.998	leading
Contingency	43	-159	9	0.998	leading
Contingency	44	-159	9.3	0.998	leading
Contingency	45	-159	9.4	0.998	leading
Contingency	46	-159	8.5	0.999	leading
Contingency	47	-159	8.5	0.999	leading
Contingency	50	-159.1	3.9	1	leading

K: Group 2 Dynamic Stability Analysis Report

See Power-Tek report next page

DISIS-2015-001 (Group 02) Definitive Interconnection System Impact Study

Final Report

Prepared by	**PSC North America**
For	**Southwest Power Pool, LLC**
Reference	**DISIS-2015-001 (Group 02)**
Date	**August 24, 2015**
	Proprietary & Confidential

Revision Table

Revision	Issue Date	Description
0	July 20, 2015	First issue for SPP comments.
1	August 24, 2015	Final issue – no changes.

Reviewers

Name	Interest	Date
Andrew Robbie	Principal Engineer	August 24, 2015

Approval

Name	Position	Date
Marc Brunet Watson	Director Power Networks, PSC-NA	August 24, 2015

TABLE OF CONTENTS

1 ..... Executive Summary 5
1.1 Cluster scenario 5
1.2 Standalone scenario, GEN-2014-037 6
1.3 Standalone scenario, GEN-2014-038 6
1.4 Standalone scenario, GEN-2015-006 7
1.5 Prior queue project issues 8
2 ..... Introduction 9
3 ..... Base case model and generator data 11
3.1 Simulation Tools 11
3.2 Generator power flow data 11
3.3 Generator dynamic models and data 13
3.4 Power flow base cases 13
3.5 Contingency definitions 15
4 ..... Short circuit analysis 16
5 ..... Stability analysis 18
5.1 Evaluation criteria 18
5.2 Cluster scenario results 19
5.3 Standalone scenario (GEN-2014-037) 25
5.4 Standalone scenario (GEN-2014-038) 28
6 ..... Power factor analysis 34
7 ..... Conclusions 38
7.1 Cluster scenario 38
7.2 Standalone scenario, GEN-2014-037 38
7.3 Standalone scenario, GEN-2014-038 39
7.4 Standalone scenario, GEN-2015-006 39
7.5 Prior queue project issues 40

Appendix A **Southwest Power Pool Disturbance Performance Requirements 41**

Appendix B **Project dynamic model data 44**

Appendix C **Results from Stability Analysis Results for Cluster scenario 47**

Appendix D **Stability Analysis Results for Standalone Scenario (GEN-2014-037) 48**

Appendix E **Stability Analysis Results for Standalone Scenario (GEN-2014-038) 49**

Appendix F **Stability Analysis Results for Standalone Scenario (GEN-2015-006) 50**

List of Tables

Table 1: Group 02 Generation Interconnection Requests..... 5
Table 2: Prior Queued Projects 9
Table 3: GEN-2014-037, GEN-2014-038 and GEN-2015-006 power flow data 12
Table 4: Short circuit analysis results 16
Table 5: Summary of stability analysis results for cluster scenario 20
Table 6: Summary of mitigation measures required for Cluster Scenario 24
Table 7: Summary of stability results for standalone scenario (GEN-2014-037).....26
Table 8: Mitigation measures required for Standalone scenario (GEN-2014-037).....27
Table 9: Summary of stability results for standalone scenario (GEN-2014-038).....28
Table 10: Mitigation measures required for Standalone scenario (GEN-2014-038) 30
Table 11: Summary of stability results for standalone scenario (GEN-2015-006).....32
Table 12: Mitigation measures required for Standalone scenario (GEN-2015-006) 33
Table 13: Power factor analysis for 2015 SP base case.....34
Table 14: Power factor analysis for 2015 WP base case.....35
Table 15: Power factor analysis for 2025 SP base case.....36
Table 16: Reactive power from the project's transmission lines 37

List of Figures

Figure 1: One line diagram for GEN-2014-037, GEN-2014-038 and GEN-2015-006.....11
Figure 2: Cluster scenario case- Power flow 2015 Summer Peak 14
Figure 3: Cluster scenario case – Power flow 2015 Winter Peak 14
Figure 4: Cluster scenario case – Power flow 2025 Summer Peak 15

1 Executive Summary

As the Regional Transmission Operator, SouthWest Power Pool (SPP) is responsible for conducting a Definitive Impact Study for its interconnection customers. The customers in DISIS-2015-001 (Group 02) have now requested a generation interconnection study through SPP for their respective interconnection requests. SPP contracted Power Systems Consultants (PSC) to carry out this definitive interconnection system impact study (DISIS), which includes the projects listed in Table 1.

Table 1: Group 02 Generation Interconnection Requests

Request	Size (MW)	Wind Turbine Model	Point of Interconnection
GEN-2014-037	200	Vestas V110 2.0MW	Tap on Hitchland to Beaver County 345kV (Optima 345kV – 560010)
GEN-2014-038	200	Vestas V110 VCSS 2.0MW	Tap on Hitchland to Potter County 345kV (560011)
GEN-2015-006	150	Vestas V100 VCSS 2.0MW	Beaver County 345kV (515554)

The definitive impact studies include short circuit analysis, stability analysis, reactive analysis and power factor analysis.

The following base cases were studied as part of the impact studies:

- MDWG14-15SP_DIS1501_G02 – 2015 summer peak base case
- MDWG14-15WP_DIS1501_G02 – 2015 winter peak base case
- MDWG14-25SP_DIS1501_G02 – 2025 summer peak base case

1.1 Cluster scenario

Fifty-one contingencies including no-fault contingency were simulated for each of the three base cases: 2015 summer peak, 2015 winter peak, and 2025 summer peak.

A number of contingencies were found to be unstable and mitigations were required to enable a stable outcome to be achieved. This occurred for contingencies related to the transfer paths of Hitchland-Beaver County-Woodward and Hitchland-Finney- Holcomb:

- FLT04-3PH, FLT06-3PH, FLT39-PO, FLT40-PO and FLT42-PO.

Mitigations that were tested included one or more of the following:

- A new 345 kV line from Beaver County 345 kV to Grapevine 345 kV (a new substation) to Chisholm 345kV.
- A runback of Group 02 generators to 50% or 25% output, or tripping of the generators.
- Disabling of prior queue project wind farm voltage and/or frequency tripping relays.

Once the mitigations were applied:

- Group 02 wind generators (as listed in Table 1) are able to ride through all the contingencies tested and the transient recovery voltage at the POIs remains within a 0.7 to 1.2 pu range following fault clearance;
- No tripping of prior queue projects occurs;
- No large rotor angle deviation and oscillations (as per SPP Disturbance Performance Requirements) occurring for the synchronous generators in the monitored areas (the rotor angle deviation is less than 1 degree for the synchronous generators).

1.2 Standalone scenario, GEN-2014-037

Fifty-one contingencies including no-fault contingency were simulated for each of the three base cases: 2015 summer peak, 2015 winter peak, and 2025 summer peak.

A number of contingencies were found to be unstable and mitigations were required to enable a stable outcome to be achieved. This occurred for contingencies mainly related to the transfer paths of Hitchland-Beaver County-Woodward and Hitchland-Finney- Holcomb:

- FLT01-3PH, FLT04-3PH, FLT06-3PH, FLT39-PO, FLT40-PO and FLT42-PO.

Mitigations that were tested included one or more of the following:

- A new 345 kV line from Beaver County 345 kV to Grapevine 345 kV (a new substation) to Chisholm 345kV.
- A runback of GEN-2014-037 generator to 50% output.
- Disabling of prior queue project wind farm voltage and/or frequency tripping relays.

Once the mitigations were applied:

- GEN-2014-037 is able to ride through all the contingencies tested and the transient recovery voltage at the POI remains within a 0.7 to 1.2 pu range following fault clearance;
- No tripping of prior queue projects occurs;
- No large rotor angle deviation and oscillations (as per SPP Disturbance Performance Requirements) occurring for the synchronous generators in the monitored areas (the rotor angle deviation is less than 1 degree for the synchronous generators).

1.3 Standalone scenario, GEN-2014-038

Forty-three contingencies including no-fault contingency were simulated for each of the three base cases: 2015 summer peak, 2015 winter peak, and 2025 summer peak.

A number of contingencies were found to be unstable and mitigations were required to enable a stable outcome to be achieved. This occurred for contingencies related to the transfer paths of Hitchland-Beaver County-Woodward and Hitchland-Finney- Holcomb:

- FLT04-3PH, FLT06-3PH, FLT40-PO and FLT42-PO.

Mitigations that were tested included one or more of the following:

- A new 345 kV line from Beaver County 345 kV to Grapevine 345 kV (a new substation) to Chisholm 345kV.
- A runback of GEN-2014-038 generators to 25% output.
- Disabling of prior queue project wind farm voltage and/or frequency tripping relays.

Once the mitigations were applied:

- GEN-2014-038 is able to ride through all the contingencies tested and the transient recovery voltage at the POI remains within a 0.7 to 1.2 pu range following fault clearance;
- No tripping of prior queue projects occurs;
- No large rotor angle deviation and oscillations (as per SPP Disturbance Performance Requirements) occurring for the synchronous generators in the monitored areas (the rotor angle deviation is less than 1 degree for the synchronous generators).

1.4 Standalone scenario, GEN-2015-006

Forty-seven contingencies including no-fault contingency were simulated for each of the three base cases: 2015 summer peak, 2015 winter peak, and 2025 summer peak.

A number of contingencies were found to be unstable and mitigations were required to enable a stable outcome to be achieved. This occurred for contingencies related to the transfer paths of Hitchland-Beaver County-Woodward and Hitchland-Finney- Holcomb:

- FLT04-3PH, FLT06-3PH, FLT40-PO and FLT42-PO.

Mitigations that were tested included one or more of the following:

- A new 345 kV line from Beaver County 345 kV to Grapevine 345 kV (a new substation) to Chisholm 345kV.
- A runback of GEN-2015-006 generator to 50% or 25% output.
- Disabling of prior queue project wind farm voltage and/or frequency tripping relays.

Once the mitigations were applied:

- GEN-2015-006 is able to ride through all the contingencies tested and the transient recovery voltage at the POI remains within a 0.7 to 1.2 pu range following fault clearance;
- No tripping of prior queue projects occurs;
- No large rotor angle deviation and oscillations (as per SPP Disturbance Performance Requirements) occurring for the synchronous generators in the monitored areas (the rotor angle deviation is less than 1 degree for the synchronous generators).

1.5 Prior queue project issues

A possible issue with prior queue project GEN-2006-044 dynamic model was identified whereby for FLT42-PO, after mitigations were applied, it causes high frequency oscillations in power output and machine terminal voltage post fault clearing for several seconds before stabilising. This was found to be consistent across all three base cases for the cluster, and all three standalone assessments. Enabling the voltage/frequency trip relays for GEN-2006-044 resulted in it tripping post-fault and the high frequency oscillations have been removed.

2 Introduction

As the Regional Transmission Operator, SPP is responsible to conduct a definitive impact study for its interconnection customers. The customers in DISIS-2015-001 (Group 02) have now requested a generation interconnection study through SPP for their respective interconnection requests.

SPP contracted Power Systems Consultants (PSC) to carry out this definitive impact study (DIS), which includes the Group 02 projects listed in Table 1.

The definitive impact studies include short circuit analysis, stability analysis, reactive analysis and power factor analysis.

The Group 02 projects are analysed for two scenarios: each as standalone (other Group 02 projects off); and together as a cluster (all on).

For the study, both the Group 02 projects and the prior queued projects listed in Table 2 have been monitored, in addition to voltages in the following areas:

- Area 520 – AEPW : American Electric Power West
- Area 524 – OKGE : Oklahoma Gas and Electric
- Area 525 – WFEC : Western Farmers Electric Cooperative
- Area 526 – SPS
- Area 531 – MIDW
- Area 534 – SUNC : Sunflower Electric Power Corporation
- Area 536 – WERE : Westar Energy

Table 2: Prior Queued Projects

Request	Size (MW)	Wind Turbine Model	Point of Interconnection
GEN-2002-008	240	GE 1.5MW	Hitchland 345kV (523097)
GEN-2002-009	79.8	Suzlon 2.1MW	Hansford 115kV (523195)
GEN-2003-020	159.1	GE 1.5/1.6 MW	Carson Co. 115kV (523928)
GEN-2006-020S	20	D8.2 2.0MW	Frisco Wind 115kV (523160)
GEN-2006-044	370	DeWind D9.2 2.0MW	Hitchland 345kV (523097)
GEN-2007-046	200.0	Vestas V100/V110 2.0MW	Hitchland 115kV (523093)
GEN-2008-047	300	GE 1.7MW	Beaver County 345kV (515554)
GEN-2010-001	300	GE 1.85MW	Beaver County 345kV (515554)
GEN-2010-014	358.8	Siemens SWT 2.3MW	Hitchland 345kV (523097)
ASGI-2011-002	20	DeWind D8.2 2.0MW	Herring 115kV (523359)

Request	Size (MW)	Wind Turbine Model	Point of Interconnection
GEN-2011-014	201	Siemens 3.0MW	Beaver County 345kV (515554)
GEN-2011-022	299	Siemens 2.3MW	Hitchland 345kV (523097)
GEN-2013-030	300	Vestas 2.0 MW VCSS (583763, 583766)	Beaver County 345kV (515554)
GEN-2014-026	150.0	Acciona AW3000 109M, 3.0MW	Beaver County 345kV (515554)

3 Base case model and generator data

3.1 Simulation Tools

The modelling and studies in this report were undertaken using the PSS/E Version 32.2.1 software package.

3.2 Generator power flow data

The Group 02 generators' power flow data for GEN-2014-037, GEN-2014-038 and GEN-2015-006 as obtained from the base case model are provided in Table 3. The one line diagrams from PSS/E showing the connectivity of those plants are shown in Figure 1.

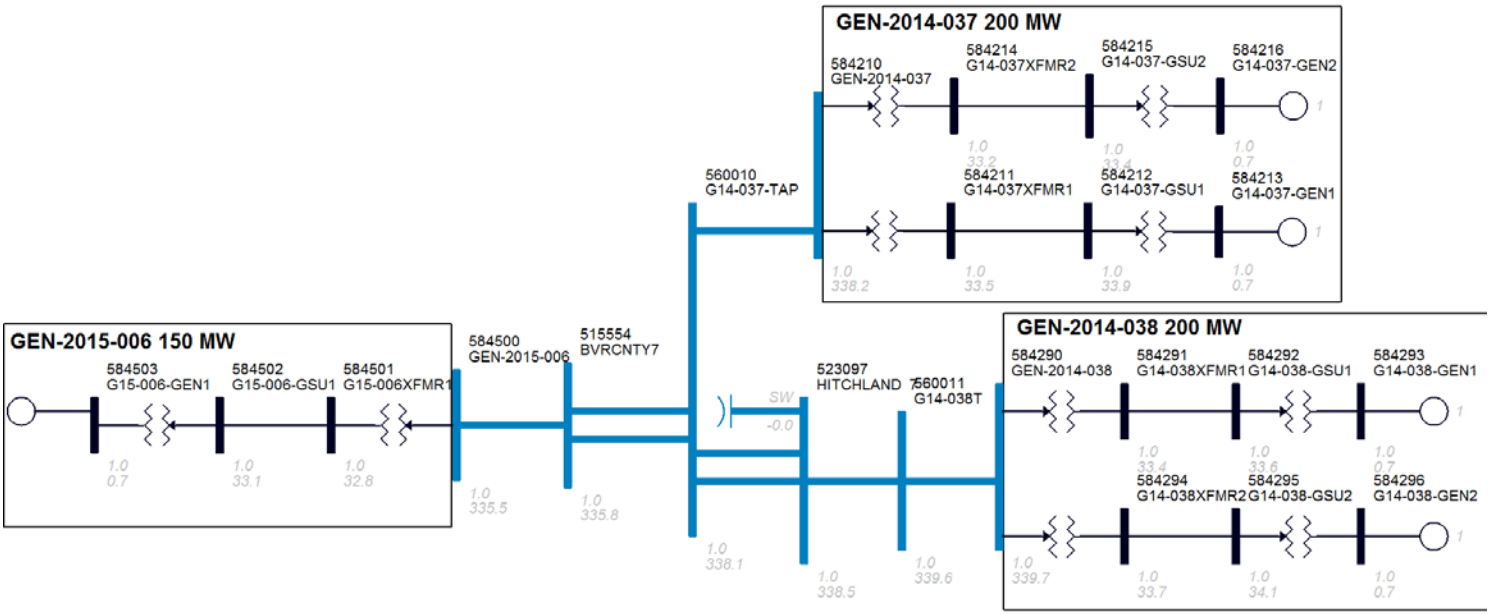

Figure 1: One line diagram for GEN-2014-037, GEN-2014-038 and GEN-2015-006

Table 3: GEN-2014-037, GEN-2014-038 and GEN-2015-006 power flow data

	G14-037-GEN1	G14-037-GEN2	G14-038-GEN1	G14-038-GEN2	G15-006-GEN1
Generator	Wind	Wind	Wind	Wind	Wind
Pgen [MW]	92	108	110	90	150
Pmax [MW]	92	108	110	90	150
Pmin [MW]	0	0	0	0	0
Qmax [MVAr]	18.68	21.93	22.34	18.28	30.46
Qmin [MVAr]	-26.83	-31.5	-32.08	-26.25	-43.75
Mbase [MVA]	92	108 MVA	110	90	150
Zsorce [pu on MVA base	R = 0.005 X= j0.1991	R = 0.005 X= j0.1991	R = 0.005 X= j0.1991	R = 0.005 X= j0.1991	R = 0.005 X= j0.1991
Transformer 1	GSU	GSU	GSU	GSU	GSU
Ratio [kV/kV]	34.5 / 0.69	34.5 / 0.69	34.5 / 0.69	34.5 / 0.69	34.5 / 0.69
Rating [MVA]	92	108	92	108	150
Mbase [MVA]	96	108	96	108	150
Impedance [pu on Mbase]	R = 0.0063 X = j0.0758	R = 0.0063 X = j0.0758	R = 0.0063 X = j0.0758	R = 0.0063 X = j0.0758	R= 0.00896 X= j0.08955
Number of taps	5	5	5	5	5
Tap step size	5 %	5 %	5 %	5 %	5 %
Transformer 2	Collector	Collector	Collector	Collector	Collector
Voltage Ratio [kV/kV]	345 / 34.5	345/34.5	345/34.5	345/34.5	345/34.5
Rating [MVA]	110	110	110	110	168
Mbase [MVA]	110	110	110	110	168
Impedance (pu on Mbase)	R = 0.00191 X = j0.08998	R= 0.00191 X= j0.08998	R= 0.00191 X= j0.08998	R= 0.00191 X= j0.08998	R= 0.00458 X= j0.1099
Number of taps	33	33	33	33	33
Tap step size	5 %?	5 %?	5 %?	5 %?	5 %?
Transmission line 34.5 kV [pu, 100 MVA base]	R = 0.01361 X = 0.01946 B = 0.05734	R = 0.00463 X = 0.00539 B = 0.03341	R = 0.00604 X = 0.00765 B = 0.04301	R = 0.01481 X = 0.02053 B = 0.05795	R = 0.00553 X = 0.00482 B = 0.03770
Transmission line 345 kV [pu, 100 MVA base]	R= 0.00116 X= 0.00479 B= 0.04364 L= 7.04 miles	R= 0.00116 X= 0.00479 B= 0.04364 L= 7.04 miles	R= 0.00049 X= 0.00203 B= 0.01848 L= 2.982 miles	R= 0.00049 X= 0.00203 B= 0.01848 L= 2.982 miles	R= 0.00055 X= 0.00506 B= 0.08545 L= 10.0 miles

3.3 Generator dynamic models and data

The dynamics simulation model for GEN-2014-037, GEN-2014-038 and GEN-2015-006 are based on the Vestas V110 & V100 VCSS 2.0 MW user models. The dynamic data for each of the generators is given in Appendix B.

3.4 Power flow base cases

The following base cases were studied as part of the impact studies:

- MDWG14-15SP_DIS1402_G07 – 2015 Summer peak base case
- MDWG14-15WP_DIS1402_G07 – 2015 winter peak base case
- MDWG14-25SP_DIS1402_G07 – 2025 summer peak base case

The base cases contain the GEN-2014-037, GEN-2014-038 and GEN-2015-006 projects dispatched at 100% output power as well as the prior queued projects listed in Table 2, also dispatched at 100% output power.

The three base cases were also updated with the following (based on advice from SPP):

- The Group 02 generators were modelled with a reactive range corresponding to -0.96 (leading) to 0.98 (lagging) power factor.
- A 75 MVAr SVC was added at Beaver County 345 kV (Bus 560123)

The power flow and voltages from GEN-2014-037, GEN-2014-038 and GEN-2015-006 and the POIs, in the Cluster scenario cases without outage are shown in Figure 2 to Figure 4 for 2015 summer peak, 2015 winter peak, and 2025 summer peak base cases respectively.

No voltages outside the range of 0.95 to 1.05 pu were observed on buses above 115 kV in the monitored areas.

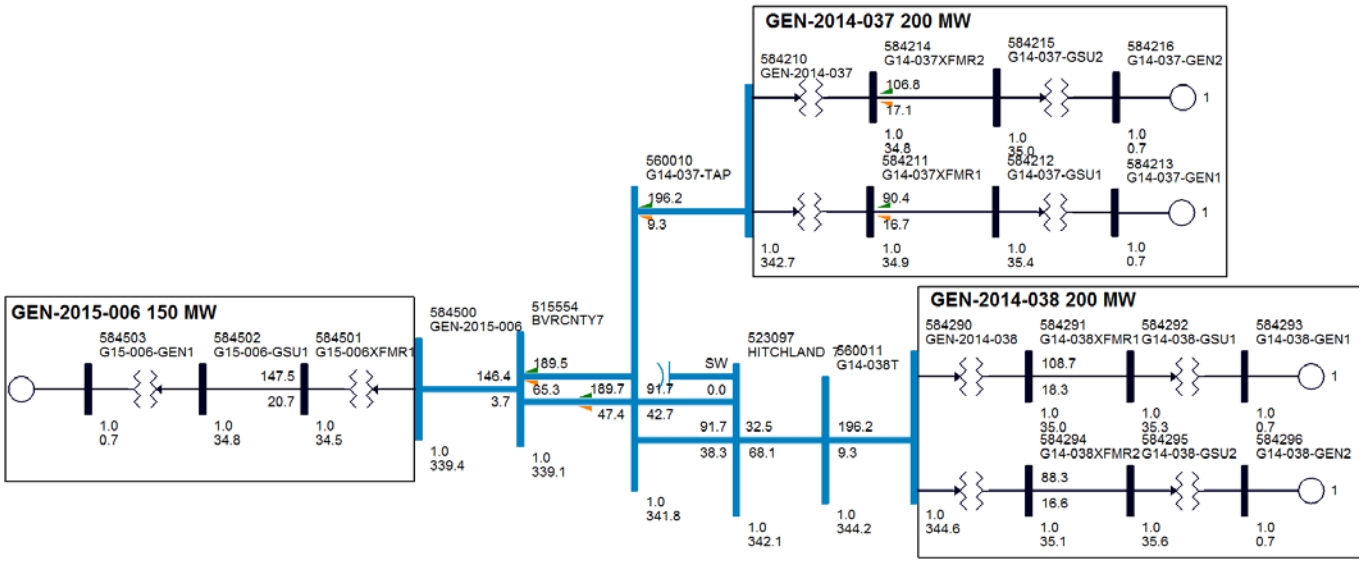

Figure 2: Cluster scenario case- Power flow 2015 Summer Peak

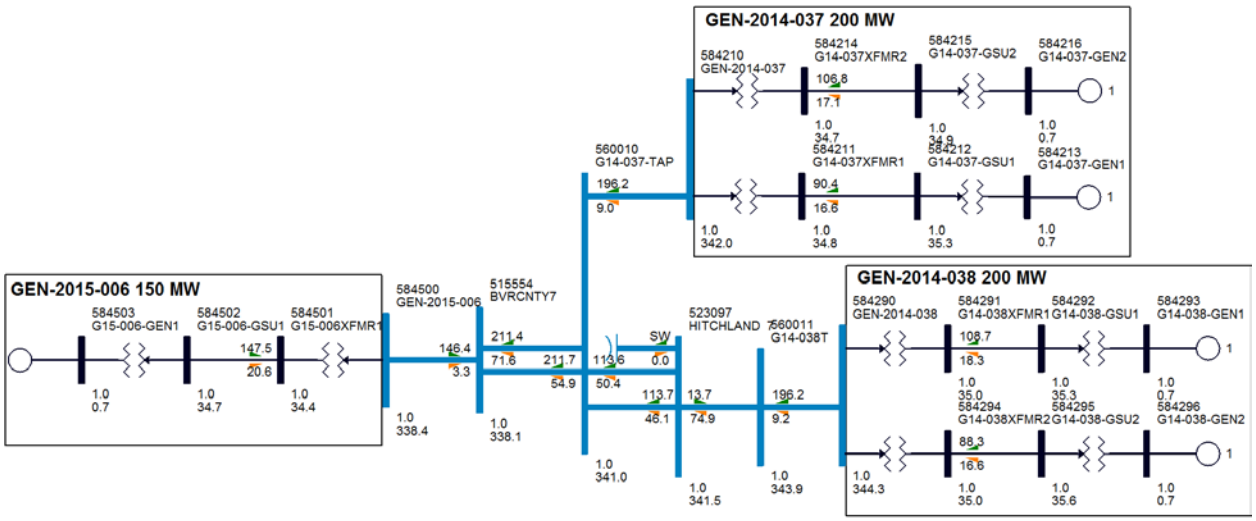

Figure 3: Cluster scenario case – Power flow 2015 Winter Peak

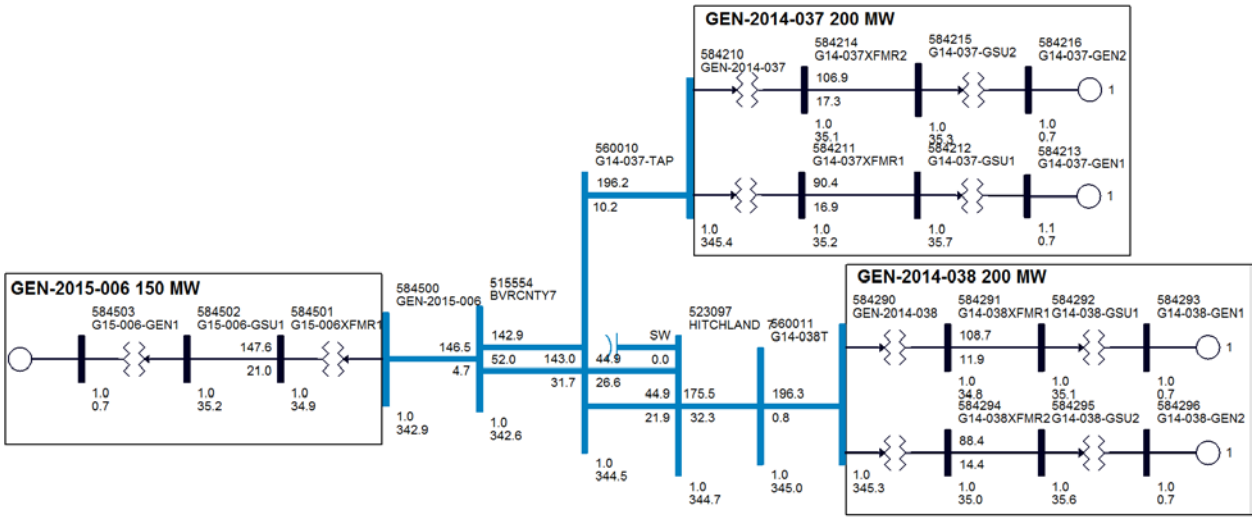

Figure 4: Cluster scenario case – Power flow 2025 Summer Peak

3.5 Contingency definitions

The contingencies that were studied in the stability and power factor analysis are provided in Table 5.

4 Short circuit analysis

Short circuit analysis was performed using the 2025 summer peak base case (cluster scenario).

Table 4 below shows the post-project short circuit analysis results for buses above 115 kV and up to five buses away from the three POIs listed in Table 1.

The total short circuit currents for all the buses listed are within the typical range of the breaker duty requirements and the short circuit current contribution from three studied wind generators is not anticipated to impact breaker duty requirements at the high voltage breakers.

The single phase fault short circuit currents were not calculated as no zero sequence data are included in the Cluster Scenario case provided.

Table 4: Short circuit analysis results

Bus Number	Bus Name	Voltage (kV)	Total Short Circuit Current (kA)	Bus Number	Bus Name	Voltage (kV)	Total Short Circuit Current (kA)
514785	WOODWRD4	138	21.0	526936	YOAKUM_345	345	9.5
514787	DEWEY 4	138	6.7	531449	HOLCOMB7	345	12.2
514796	IODINE-4	138	7.2	531451	MINGO 7	345	6.4
515363	CENT 4	138	4.1	531465	SETAB 7	345	8.2
515375	WWRDEHV7	345	19.8	531469	SPERVIL7	345	14.5
515376	WWRDEHV4	138	25.7	531501	BUCKNER7	345	10.8
515394	KEENAN 4	138	9.2	531502	CIMRRN 7	345	8.5
515398	OUSPRT 4	138	9.8	531504	CPV_CIMRRN 7	345	10.8
515407	TATONGA7	345	16.2	531609	WDCTWF-1	345	6.8
515448	CRSRDSW7	345	11.5	532796	WICHITA7	345	25.0
515458	BORDER 7	345	5.1	539638	FLATRDG3	138	15.1
515497	MATHWSN7	345	28.8	539800	CLARKCOUNTY7	345	12.6
515554	BVRCNTY7	345	15.4	539801	THISTLE7	345	15.9
515785	WINDFRM4	138	19.0	539803	IRONWOOD7	345	14.0
523095	HITCHLAND 6	230	14.8	539804	THISTLE4	138	16.8
523097	HITCHLAND 7	345	16.3	560000	G11-14-TAP	345	13.8
523101	NOBLE_WND 7	345	16.3	560010	G14-037-TAP	345	16.1
523112	NOVUS1 7	345	16.0	560011	G14-038T	345	10.1
523118	BUFF_DUNES 7	345	6.8	560016	G14-068-TAP	230	9.7
523155	OCHILTREE 6	230	4.2	560027	G14-074-TAP	345	6.6
523221	XIT_INTG 6	230	2.6	560033	G1524&G1525T	345	19.8

Bus Number	Bus Name	Voltage (kV)	Total Short Circuit Current (kA)	Bus Number	Bus Name	Voltage (kV)	Total Short Circuit Current (kA)
523267	PRINGLE 6	230	4.6	562075	G11-051-TAP	345	16.5
523309	MOORE_CNTY 6	230	6.6	573501	GEN-2008-047	345	12.9
523853	FINNEY 7	345	12.0	573507	G08-047-HV-1	345	10.9
523869	CHAN/TASCOS6	230	3.8	576395	GEN-2010-014	345	11.7
523959	POTTER_CO 6	230	20.9	578542	GEN-2010-001	345	12.6
523961	POTTER_CO 7	345	7.8	579253	G07-21&14-02	345	13.5
523977	HARRNG_WST 6	230	27.1	579268	G07-44&14-03	345	9.2
523978	HARRNG_MID 6	230	27.1	579351	GEN-2007-062	345	8.6
523979	HARRNG_EST 6	230	27.1	579358	G07-062-HV-2	345	6.6
524010	ROLLHILLS 6	230	19.8	580049	GEN-2010-045	345	7.4
524044	NICHOLS 6	230	26.2	581112	GEN-2011-014	345	10.2
524163	EAST_PLANT 6	230	14.1	581148	GEN-2011-022	345	9.5
524267	BUSHLAND 6	230	10.0	582008	GEN-2011-008	345	10.2
524276	WILDOR_WND 6	230	5.1	582019	GEN-2011-019	345	19.8
524290	WILDOR2_JUS6	230	6.8	582020	GEN-2011-020	345	19.8
524296	SPNSPUR_WND7	345	4.7	583090	G1149&G1504	345	4.7
524365	RANDALL 6	230	14.5	583110	GEN-2011-051	345	16.5
524415	AMA_SOUTH 6	230	13.6	583370	GEN-2012-024	345	10.1
524623	DEAFSMITH 6	230	9.7	583760	GEN-2013-030	345	11.7
525213	SWISHER 6	230	10.2	583930	GEN-2014-026	345	10.3
525461	NEWHART 6	230	10.9	583990	GEN-2014-049	345	8.0
525481	PLANT_X 6	230	28.7	584210	GEN-2014-037	345	11.3
525524	TOLK_EAST 6	230	29.9	584290	GEN-2014-038	345	9.2
525531	TOLK_WEST 6	230	29.9	584500	GEN-2015-006	345	10.7
525830	TUCO_INT 6	230	22.6	584660	G1524&G1525	345	5.2
525832	TUCO_INT 7	345	12.2	584700	GEN-2015-029	345	9.8
526435	SUNDOWN 6	230	11.2	599950	LAMAR7	345	2.5

5 Stability analysis

A stability analysis was conducted for Group 02 wind generators using the modified versions of the 2014 series SPP Model Development Working Group (MDWG) models, for 2015 summer, 2015 winter and 2025 summer peak dynamic cases. The stability analysis was conducted with prior queue projects in service.

The following scenarios were studied:

1. Cluster scenario: all interconnection requests in Group 02 were studied at 100% nameplate output.
2. Standalone scenario: GEN-2014-037 at 100% nameplate output with other interconnection requests in Group 02 switched off.
3. Standalone scenario: GEN-2014-038 at 100% nameplate output with other interconnection requests in Group 02 switched off
4. Standalone scenario: GEN-2015-006 at 100% nameplate output with other interconnection requests in Group 02 switched off

Fifty (50) contingencies, as listed in Table 5, were simulated. Single-phase line faults were simulated by applying fault impedance to the positive sequence network at the fault location. As per the SPP current practice to compute the fault levels, the fault impedance was computed to give a positive sequence voltage at the specified fault location of approximately 60% pre-fault voltage.

Each of the base cases was initially tested with a no-fault 20-second simulation to verify the stability of the base case – all angle deviations were below 0.5 degrees for all synchronous machines in the monitored areas.

Each contingency simulation was performed with an initial 0.5 second steady-state run, and a total simulation time of 20 seconds to confirm adequate machine damping.

5.1 Evaluation criteria

The SPP Disturbance Performance Requirements was used to evaluate the stability of interconnection GEN-2014-037, GEN-2014-038 and GEN-2015-006.

In this assessment, a system is considered as stable if the following is observed:

- Group 02 wind generators (as listed in Table 1) are able to ride through the contingency fault and recover to pre-fault output and terminal voltage;
- No tripping of prior queue projects occurs;
- No large rotor angle deviation and oscillations occur in synchronous machines and that oscillatory damping meets the requirements described in Appendix A;
- The transient recovery voltage at the POIs following fault clearance remains within 0.7 to 1.2 pu, as per the requirements described in Appendix A.

5.2 Cluster scenario results

The cluster scenario results are summarized in Table 5 – where “No” indicates system unstable, and “N/a” indicates not applicable. The detailed dynamic simulation plots for all the contingencies can be found in Appendix C.

A number of contingencies were found to be unstable mostly occurring in the two 2015 base cases:

- 2015 SP – 8 unstable contingencies
- 2015 WP – 7 unstable contingencies
- 2025 SP – 4 unstable contingencies

The reasons for the unstable contingencies were:

1. Contingencies FLT39-PO and FLT40-PO both have a prior outage of the Hitchland (523097) - Finney (523853) circuit and for the two 2015 base cases, the load flow failed to converge.

   This is due to lack of reactive power support and high power flow of approximately 1100 MW (from GEN-2011-022, GEN-2010-014, GEN-2002-008 and GEN-2006-044) being forced to the Hitchland- Beaver County-Woodward path.

   Re-testing with the following mitigations resulted in a stable outcome:

   - A new 345 kV line from Beaver County 345 kV to Grapevine 345 kV (a new substation) to Chisholm 345kV.
   - For 2015 WP base case only, a runback of Group 02 generators to 50% output.

2. Three prior queue wind generators (i.e., GEN-2006-020S, GEN-2006-044 and GEN-2014-074) were tripped by voltage or frequency tripping relays under several contingencies.

   The contingencies were re-tested with the over/under frequency and over/under voltage tripping relays disabled resulting in a stable outcome.

3. Contingencies FLT04-3PH and FLT06-3PH both resulted in post fault instability.

   The power output from the wind generators mainly flows through two paths: Hitchland-Beaver County-Woodward and Hitchland-Finney- Holcomb. Tripping any of these two paths will force power flow through the other path, which causes voltage collapse or low voltage along the in-service transfer path.

   Re-testing with the following mitigations resulted in a stable outcome:

   - A new 345 kV line from Beaver County 345 kV to Grapevine 345 kV (a new substation) to Chisholm 345kV.
   - For some base cases a runback of Group 02 generators was also required.

The unstable contingencies together with the mitigation measures applied are summarized in Table 6 for each base case. After the mitigations shown were applied the contingencies were re-tested and a stable outcome was achieved. The detailed dynamic simulation plots with mitigation measures are included in Appendix C.

Table 5: Summary of stability analysis results for cluster scenario

Cont. Name	Description	2015 SP	2015 WP	2025 SP
FLT01-3PH	3-ph fault on G14-037 Tap 345kV (560010) to Beaver County 345kV (515554) CKT 1, near G14-037 Tap. a. Apply fault at the G14-037 Tap 345kV bus. b. Clear fault after 5 cycles and trip the faulted line. c. Wait 20 cycles, and then re-close the line in (b) back into the fault. d. Leave fault on for 5 cycles, then trip the line in (b) and remove fault.	***No***	***No***	Ok
FLT02-3PH	3-ph fault on G14-037 Tap 345kV (560010) to Hitchland 345kV (523097) CKT 1, near G14-037 Tap. a. Apply fault at the G14-037 Tap 345kV bus. b. Clear fault after 5 cycles and trip the faulted line. c. Wait 20 cycles, and then re-close the line in (b) back into the fault. d. Leave fault on for 5 cycles, then trip the line in (b) and remove fault.	***No***	Ok	Ok
FLT03-3PH	3-ph fault on the Beaver 345kV (515554) to GEN 2011-014 tap 345kV (560000) CKT 1, near Beaver. a. Apply fault at the Beaver 345kV bus. b. Clear fault after 5 cycles and trip the faulted line. c. Wait 20 cycles, and then re-close the line in (b) back into the fault. d. Leave fault on for 5 cycles, then trip the line in (b) and remove fault.	Ok	Ok	Ok
FLT04-3PH	3-ph fault on the Beaver 345kV (515554) to GEN 2011-014 tap 345kV (560000) CKT 1 & 2, near Beaver. a. Apply fault at the Beaver 345kV bus. b. Clear fault after 5 cycles and trip the faulted line. c. Wait 20 cycles, and then re-close the line in (b) back into the fault. d. Leave fault on for 5 cycles, then trip the line in (b) and remove fault.	***No***	***No***	***No***
FLT05-3PH	3-ph fault on the GEN 2011-014 tap 345kV (560000) to Woodward 345kV (515375) CKT 1, near GEN 2011-014 tap. a. Apply fault at the GEN 2011-014 tap 345kV bus. b. Clear fault after 5 cycles and trip the faulted line. c. Wait 20 cycles, and then re-close the line in (b) back into the fault. d. Leave fault on for 5 cycles, then trip the line in (b) and remove fault.	Ok	Ok	Ok
FLT06-3PH	3-ph fault on the GEN 2011-014 tap 345kV (560000) to Woodward 345kV (515375) CKT 1 & 2, near GEN 2011-014 tap. a. Apply fault at the GEN 2011-014 tap 345kV bus. b. Clear fault after 5 cycles and trip the faulted line. c. Wait 20 cycles, and then re-close the line in (b) back into the fault. d. Leave fault on for 5 cycles, then trip the line in (b) and remove fault.	***No***	***No***	***No***
FLT07-3PH	3-ph fault on the G14-037-Tap 345kV (560010) to Hitchland 345kV (523097) CKT 1 and 2, near Beaver. a. Apply fault at the G14-037-Tap 345kV bus. b. Clear fault after 5 cycles and trip the faulted lines (CKT 1 and 2).	Ok	Ok	Ok
FLT08-3PH	3-ph fault on the Thistle 345kV (539801) to Woodward 345kV (515375) CKT 1, near Thistle. a. Apply fault at the Thistle 345kV bus. b. Clear fault after 5 cycles and trip the faulted line. c. Wait 20 cycles, and then re-close the line in (b) back into the fault. d. Leave fault on for 5 cycles, then trip the line in (b) and remove fault.	Ok	Ok	Ok
FLT09-3PH	3-ph fault on the Thistle 345kV (539801) to Woodward 345kV (515375) CKT 1 and 2, near Thistle. a. Apply fault at the Thistle 345kV bus. b. Clear fault after 5 cycles and trip the faulted lines (CKT 1 and 2).	Ok	Ok	Ok
FLT10-3PH	3-ph fault on the Woodward 345kV (515375) to Border 345kV (515458) CKT 1, near Woodward. a. Apply fault at the Woodward 345kV bus. b. Clear fault after 5 cycles and trip the faulted line. c. Wait 20 cycles, and then re-close the line in (b) back into the fault. d. Leave fault on for 5 cycles, then trip the line in (b) and remove fault.	Ok	Ok	Ok
FLT11-3PH	3-ph fault on the Woodward 345kV (515375) to G11-051 Tap 345kV (562075) CKT 1, near Woodward. a. Apply fault at the Woodward 345kV bus. b. Clear fault after 5 cycles and trip the faulted line. c. Wait 20 cycles, and then re-close the line in (b) back into the fault. d. Leave fault on for 5 cycles, then trip the line in (b) and remove fault.	Ok	Ok	Ok
FLT12-3PH (2025 SP only)	3-ph fault on the Woodward 345kV (515375) to G11-051 Tap 345kV (562075) CKT 1 and 2, near Woodward. a. Apply fault at the Woodward 345kV bus. b. Clear fault after 5 cycles and trip the faulted lines (CKT 1 and 2).	N/a	N/a	Ok

Cont. Name	Description	2015 SP	2015 WP	2025 SP
FLT13-3PH	3-ph fault on the Woodward 345kV (515375) to Woodward 138kV (515376) Woodward 13.8kV (515799) XFMR CKT 2, near Woodward 345kV. a. Apply fault at the Woodward 345kV bus. b. Clear fault after 5 cycles and trip the faulted transformer.	Ok	Ok	Ok
FLT14-3PH	3-ph fault on the Border 345kV (515458) to Tuco 345kV (525832) CKT 1, near Border. a. Apply fault at the Border 345kV bus. b. Clear fault after 5 cycles and trip the faulted line. c. Wait 20 cycles, and then re-close the line in (b) back into the fault. d. Leave fault on for 5 cycles, then trip the line in (b) and remove fault.	Ok	Ok	Ok
FLT15-3PH	3-ph fault on the Tuco 345kV (525832) to OKU 345kV (511456) CKT 1, near Tuco. a. Apply fault at the Tuco 345kV bus. b. Clear fault after 5 cycles and trip the faulted line. c. Wait 20 cycles, and then re-close the line in (b) back into the fault. d. Leave fault on for 5 cycles, then trip the line in (b) and remove fault.	***No***	***No***	***No***
FLT16-3PH	3-ph fault on the Tuco 345kV (525832) to Tuco 230kV (525830) Tuco 13.2kV (525824) XFMR CKT 1, near Tuco 345kV. a. Apply fault at the Tuco 345kV bus. b. Clear fault after 5 cycles and trip the faulted transformer.	Ok	Ok	Ok
FLT17-3PH (2015 WP and 2025 SP only)	3-ph fault on the Tatonga 345kV (515407) to Northwest 345kV (514880) CKT 1, near Tatonga. a. Apply fault at the Tatonga 345kV bus. b. Clear fault after 5 cycles and trip the faulted line. c. Wait 20 cycles, and then re-close the line in (b) back into the fault. d. Leave fault on for 5 cycles, then trip the line in (b) and remove fault.	N/a	Ok	Ok
FLT18-3PH	3-ph fault on the Thistle 345kV (539801) to G1524&G1525T 345kV (560033) CKT 1, near Thistle. a. Apply fault at the Thistle 345kV bus. b. Clear fault after 5 cycles and trip the faulted line. c. Wait 20 cycles, and then re-close the line in (b) back into the fault. d. Leave fault on for 5 cycles, then trip the line in (b) and remove fault.	Ok	Ok	Ok
FLT19-3PH	3-ph fault on the Thistle 345kV (539801) to G1524&G1525T 345kV (560033) CKT 1 and 2, near Thistle. a. Apply fault at the Thistle 345kV bus. b. Clear fault after 5 cycles and trip the faulted lines (CKT 1 and 2).	Ok	Ok	Ok
FLT20-3PH	3-ph fault on the Thistle 345kV (539801) to Clark County 345kV (539800) CKT 1, near Thistle. a. Apply fault at the Thistle 345kV bus. b. Clear fault after 5 cycles and trip the faulted line. c. Wait 20 cycles, and then re-close the line in (b) back into the fault. d. Leave fault on for 5 cycles, then trip the line in (b) and remove fault.	Ok	Ok	Ok
FLT21-3PH	3-ph fault on the Thistle 345kV (539801) to Clark County 345kV (539800) CKT 1 and 2, near Thistle. a. Apply fault at the Thistle 345kV bus. b. Clear fault after 5 cycles and trip the faulted lines (CKT 1 and 2).	Ok	Ok	Ok
FLT22-3PH	3-ph fault on the Thistle 345kV (539801) to Thistle 138kV (539804) Thistle 13.8kV (539802) XFMR CKT 1, near Thistle 345kV. a. Apply fault at the Thistle 345kV bus. b. Clear fault after 5 cycles and trip the faulted transformer.	Ok	Ok	Ok
FLT23-3PH	3-ph fault on the Hitchland 345kV (523097) to Finney 345kV (523853) CKT 1, near Hitchland. a. Apply fault at the Hitchland 345kV bus. b. Clear fault after 5 cycles and trip the faulted line. c. Wait 20 cycles, and then re-close the line in (b) back into the fault. d. Leave fault on for 5 cycles, then trip the line in (b) and remove fault.	OK	OK	Ok
FLT24-3PH	3-ph fault on the Hitchland 345kV (523097) to Hitchland 230kV (523095) Hitchland 13.2kV (523091) XFMR CKT 1, near Hitchland 345kV. a. Apply fault at the Hitchland 345kV bus. b. Clear fault after 5 cycles and trip the faulted transformer.	Ok	Ok	Ok
FLT25-3PH	3-ph fault on the Potter County 345kV (523961) to Potter County 230kV (523959) Potter County 13.2kV (523957) XFMR CKT 1, near Potter County 345kV. a. Apply fault at the Potter County 345kV bus. b. Clear fault after 5 cycles and trip the faulted transformer.	Ok	Ok	Ok
FLT26-3PH	3-ph fault on the Potter County 230kV (523959) to Potter County 115kV (523951) Potter County 13.2kV (523950) XFMR CKT 1, near Potter County 230kV. a. Apply fault at the Potter County 230kV bus. b. Clear fault after 5 cycles and trip the faulted transformer.	Ok	Ok	Ok

Cont. Name	Description	2015 SP	2015 WP	2025 SP
FLT27-3PH	3-ph fault on the Hitchland 230kV (523095) to Ochiltree 230kV (523155) CKT 1, near Hitchland. a. Apply fault at the Hitchland 230kV bus. b. Clear fault after 5 cycles and trip the faulted line. c. Wait 20 cycles, and then re-close the line in (b) back into the fault. d. Leave fault on for 5 cycles, then trip the line in (b) and remove fault.	Ok	Ok	Ok
FLT28-3PH	3-ph fault on the Hitchland 230kV (523095) to Moore County 230kV (523309) CKT 1, near Hitchland. a. Apply fault at the Hitchland 230kV bus. b. Clear fault after 5 cycles and trip the faulted line. c. Wait 20 cycles, and then re-close the line in (b) back into the fault. d. Leave fault on for 5 cycles, then trip the line in (b) and remove fault.	Ok	Ok	Ok
FLT29-3PH	3-ph fault on the Finney 345kV (523853) to Holcomb 345kV (531449) CKT 1, near Finney. a. Apply fault at the Finney 345kV bus. b. Clear fault after 5 cycles and trip the faulted line. c. Wait 20 cycles, and then re-close the line in (b) back into the fault. d. Leave fault on for 5 cycles, then trip the line in (b) and remove fault.	Ok	Ok	Ok
FLT30-3PH	3-ph fault on the Holcomb 345kV (531449) to Buckner 345kV (531501) CKT 1, near Holcomb. a. Apply fault at the Holcomb 345kV bus. b. Clear fault after 5 cycles and trip the faulted line. c. Wait 20 cycles, and then re-close the line in (b) back into the fault. d. Leave fault on for 5 cycles, then trip the line in (b) and remove fault.	Ok	Ok	Ok
FLT31-3PH	3-ph fault on G14-038 Tap 345kV (560011) to Potter 345kV (523961) CKT 1, near G14-038 Tap. a. Apply fault at the G14-038 Tap 345kV bus. b. Clear fault after 5 cycles and trip the faulted line. c. Wait 20 cycles, and then re-close the line in (b) back into the fault. d. Leave fault on for 5 cycles, then trip the line in (b) and remove fault.	Ok	Ok	Ok
FLT32-3PH	3-ph fault on G14-038 Tap 345kV (560011) to Hitchland 345kV (523097) CKT 1, near G14-038 Tap. a. Apply fault at the G14-038 Tap 345kV bus. b. Clear fault after 5 cycles and trip the faulted line. c. Wait 20 cycles, and then re-close the line in (b) back into the fault. d. Leave fault on for 5 cycles, then trip the line in (b) and remove fault.	Ok	Ok	Ok
FLT33-3PH	3-ph fault on Potter 230kV (523959) to Moore County 230kV (523309) CKT 1, near Potter. a. Apply fault at the Potter 230kV bus. b. Clear fault after 5 cycles and trip the faulted line. c. Wait 20 cycles, and then re-close the line in (b) back into the fault. d. Leave fault on for 5 cycles, then trip the line in (b) and remove fault.	Ok	Ok	Ok
FLT34-3PH	3-ph fault on Potter 230kV (523959) to Harrington East 230kV (523979) CKT 1, near Potter. a. Apply fault at the Potter 230kV bus. b. Clear fault after 5 cycles and trip the faulted line. c. Wait 20 cycles, and then re-close the line in (b) back into the fault. d. Leave fault on for 5 cycles, then trip the line in (b) and remove fault.	Ok	Ok	Ok
FLT35-3PH	3-ph fault on Potter 230kV (523959) to Rolling Hills 230kV (524010) CKT 1, near Potter. a. Apply fault at the Potter 230kV bus. b. Clear fault after 5 cycles and trip the faulted line. c. Wait 20 cycles, and then re-close the line in (b) back into the fault. d. Leave fault on for 5 cycles, then trip the line in (b) and remove fault.	Ok	Ok	Ok
FLT36-3PH	3-ph fault on Potter 230kV (523959) to Bushland 230kV (524267) CKT 1, near Potter. a. Apply fault at the Potter 230kV bus. b. Clear fault after 5 cycles and trip the faulted line. c. Wait 20 cycles, and then re-close the line in (b) back into the fault. d. Leave fault on for 5 cycles, then trip the line in (b) and remove fault.	Ok	Ok	Ok
FLT37-3PH	3-ph fault on Potter 230kV (523959) to Newhart 230kV (525461) CKT 1, near Potter. a. Apply fault at the Potter 230kV bus. b. Clear fault after 5 cycles and trip the faulted line. c. Wait 20 cycles, and then re-close the line in (b) back into the fault. d. Leave fault on for 5 cycles, then trip the line in (b) and remove fault.	Ok	Ok	Ok
FLT38-3PH	3-ph fault on the Finney 345kV (523853) to Lamar 345kV (599950) CKT 1, near Finney. a. Apply fault at the Finney 345kV bus. b. Clear fault after 5 cycles and trip the faulted line.	Ok	Ok	Ok

Cont. Name	Description	2015 SP	2015 WP	2025 SP
FLT39-PO	**Prior outage of Hitchland (523097) - Finney (523853)** 3-ph fault on G14-038 Tap 345kV (560011) to Hitchland 345kV (523097) CKT 1, near G14-038 Tap. a. Apply fault at the G14-038 Tap 345kV bus. b. Clear fault after 5 cycles and trip the faulted line. c. Wait 20 cycles, and then re-close the line in (b) back into the fault. d. Leave fault on for 5 cycles, then trip the line in (b) and remove fault.	***No***	***No***	Ok
FLT40-PO	**Prior outage of Hitchland (523097) - Finney (523853)** 3-ph fault on Hitchland 345kV (523097) to G14-037 Tap 345kV (560010) CKT 1, near G14-037 Tap. a. Apply fault at the G14-037 Tap 345kV bus. b. Clear fault after 5 cycles and trip the faulted line. c. Wait 20 cycles, and then re-close the line in (b) back into the fault. d. Leave fault on for 5 cycles, then trip the line in (b) and remove fault.	***No***	***No***	Ok
FLT41-PO	**Prior outage of G14-038 Tap 345kV (560011) to Hitchland 345kV (523097)** 3-ph fault on Finney 345kV (523853) to Hitchland 345kV (523097) CKT 1, near G14-038 Tap. a. Apply fault at the Finney 345kV bus. b. Clear fault after 5 cycles and trip the faulted line. c. Wait 20 cycles, and then re-close the line in (b) back into the fault. d. Leave fault on for 5 cycles, then trip the line in (b) and remove fault.	OK	OK	OK
FLT42-PO	**Prior outage of G14-038 Tap 345kV (560011) to Potter 345kV (523961)** 3-ph fault on Hitchland (523097) - Finney (523853) CKT 1, near Hitchland. a. Apply fault at the Hitchland 345kV bus. b. Clear fault after 5 cycles and trip the faulted line. c. Wait 20 cycles, and then re-close the line in (b) back into the fault. d. Leave fault on for 5 cycles, then trip the line in (b) and remove fault.	***No***	***No***	***No***
FLT43-PO	**Prior outage of Woodward 345kV (515375) to Thistle (539801) 345kV line** 3-ph fault on Tatonga (515407) to G14-058-TAP (560019) a. Prior outage Woodward (515375) to Thistle (539801) (solve network for steady state solution) b. 3-ph fault on the Tatonga (515407) 345kV to G14-058-TAP (560019) near Tatonga c. Clear fault after 5 cycles and trip the faulted line. d. Wait 20 cycles, and then re-close the line in (b) back into the fault. e. Leave fault on for 5 cycles, then trip the line in (b) and remove fault.	Ok	Ok	Ok
FLT44-SB	**Woodward 345kV Stuck Breaker** a. Apply single phase fault at the Woodward (515375) 345kV bus on the Woodward – GEN-2011-051 tap (562075) 345kV line b. Wait 16 cycles, and then drop Woodward (515375) 345kV to Thistle (539801) 345kV ckt 1 c. Trip Woodward to GEN-2011-051 tap 345kV and remove the fault	Ok	Ok	Ok
FLT45-SB	**Hitchland 345kV Stuck Breaker** a. Apply single phase fault at the Hitchland (523097) 345kV bus b. Wait 16 cycles, and then drop Hitchland – G14-037-TAP (560010) 345kV circuit 1and remove fault	Ok	Ok	Ok
FLT46-SB	**Hitchland 345kV Stuck Breaker** a. Apply single phase fault at the Hitchland (523097) 345kV bus b. Wait 16 cycles, and then drop Hitchland – Finney (523853) 345kV circuit 1 and remove fault	Ok	Ok	Ok
FLT47-PO	**Prior outage of Woodward 345kV (515375) to Thistle (539801) 345kV line** 3-ph fault on Tatonga (515407) to G14-058-Tap (560019) a. Prior outage Woodward (515375) to Thistle (539801) (solve network for steady state solution) b. 3-ph fault on the Tatonga (515407) 345kV to Mathewson (515497) near Tatonga c. Clear fault after 5 cycles and trip the faulted line. d. Wait 20 cycles, and then re-close the line in (b) back into the fault. e. Leave fault on for 5 cycles, then trip the line in (b) and remove fault.	Ok	Ok	Ok
FLT48-SB	**Beaver 345kV Stuck Breaker** a. Apply single phase fault at the Beaver (515554) 345kV bus b. Wait 16 cycles, and then drop Beaver – G11-14-TAP (560000) 345kV circuit 1 and remove fault	Ok	Ok	Ok
FLT49-SB	**G11-14-TAP 345kV Stuck Breaker** a. Apply single phase fault at the G11-14-TAP (560000) 345kV bus b. Wait 16 cycles, and then drop G11-14-TAP (560000) – Woodward (515375) 345kV circuit 1 and remove fault	Ok	Ok	Ok
FLT50-SB	**Woodward 345kV Stuck Breaker** a. Apply single phase fault at the Woodward (515375) 345kV bus b. Wait 16 cycles, and then drop Woodward (515375) – Border (515458) 345kV circuit 1 and remove fault	Ok	Ok	Ok
FLT51-NF	**No disturbance test**	Ok	Ok	Ok

Table 6: Summary of mitigation measures required for Cluster Scenario

Contingency Name	Base case	Mitigations required		
		New 345 kV Transmission line	Generator Voltage/Frequency tripping disabled	Runback Group 02 Generation
FLT01-3PH	2015 SP	-	GEN-2006-044 (Tripped by under frequency)	-
	2015 WP	-	GEN-2006-020S (Tripped by over voltage)	-
FLT02-3PH	2015 SP	-	GEN-2006-044 (Tripped by under frequency)	-
FLT04-3PH	2015 SP	Yes	-	-
	2015 WP	Yes	-	Reduce to 25%
	2025 SP	Yes	-	Reduce to 50%
FLT06-3PH	2015 SP	Yes	-	Trip Group 02 generators
	2015 WP	Yes	-	Trip Group 02 generators
	2025 SP	Yes	-	Reduce to 50%
FLT15-3PH	2015 SP	-	GEN-2014-074 (Triped by over voltage)	-
	2015 WP	-	GEN-2014-074 (Triped by over voltage)	-
	2025 SP	-	GEN-2014-074 (Triped by over voltage)	-
FLT39-PO	2015 SP	Yes	-	-
	2015 WP	Yes	-	Reduce to 50%
FLT40-PO	2015 SP	Yes	GEN-2006-020S (Tripped by over voltage) GEN-2006-044 (Tripped by over frequency)	-
	2015 WP	Yes	GEN-2006-020S (Tripped by over voltage)	Reduce to 50%
FLT42-PO (*)	2015 SP	Yes	GEN-2006-044 (Tripped by over frequency)	Reduce to 50%
	2015 WP	Yes	GEN-2006-020S (Tripped by over voltage) GEN-2006-044 (Tripped by over frequency)	Reduce to 50%
	2025 SP	Yes	GEN-2006-044 (Tripped by over frequency)	-

For FLT42-PO (*), while the network recovers to a steady-state (with the mitigations applied), there are high frequency oscillations in prior queue project GEN-2006-044 generator power and machine terminal voltage occurring for approximately 5 seconds post-fault clearing for both the 2015 SP and WP base cases, and to a lesser extent – approximately 2 seconds – in the 2025 SP base case. As a specific scenario FLT42-PO was re-run with the mitigations applied, except that GEN-2006-044 voltage/frequency trip relays were **en**abled – the outcome is that GEN-

2006-044 trips after fault clearing and the high frequency oscillations have been removed. This indicates there may be an issue with the dynamic model for GEN-2006-044.

5.3 Standalone scenario (GEN-2014-037)

The standalone scenario results for GEN-2014-037 are summarized in Table 7 – where “No” indicates system unstable, and “N/a” indicates not applicable. The contingency descriptions are as stated in Table 5 for each contingency name. The detailed dynamic simulation plots for all the contingencies can be found in Appendix D.

A number of contingencies were found to be unstable:

- 2015 SP – 3 unstable contingencies
- 2015 WP – 5 unstable contingencies
- 2025 SP – 3 unstable contingencies

The reasons for the unstable contingencies were:

1. One prior queue wind generators – GEN-2006-044 – was tripped by frequency tripping relays for three contingencies for differing base cases.

   The contingencies were re-tested with the over/under frequency and over/under voltage tripping relays disabled resulting in a stable outcome.

2. Contingencies FLT04-3PH, FLT06-3PH, and FLT42-3PH resulted in post fault instability.

   The power output from the wind generators mainly flows through two paths: Hitchland-Beaver County-Woodward and Hitchland-Finney- Holcomb. Tripping any of these two paths will force power flow through the other path, which causes voltage collapse or low voltage along the in-service transfer path.

   Re-testing with the following mitigations resulted in a stable outcome:

   - A new 345 kV line from Beaver County 345 kV to Grapevine 345 kV (a new substation) to Chisholm 345kV.
   - For some base cases a runback of GEN-2014-037 was also required.

The unstable contingencies together with the mitigation measures applied are summarized in Table 8 for each base case. After the mitigations shown were applied the contingencies were re-tested and a stable outcome was achieved. The detailed dynamic simulation plots with mitigation measures are included in Appendix D.

Table 7: Summary of stability results for standalone scenario (GEN-2014-037)

Contingency Name	GEN-2014-037		
	2015 SP	2015 WP	2025 SP
FLT01-3PH	Ok	***No***	Ok
FLT02-3PH	Ok	Ok	Ok
FLT03-3PH	Ok	Ok	Ok
FLT04-3PH	***No***	***No***	***No***
FLT05-3PH	Ok	Ok	Ok
FLT06-3PH	***No***	***No***	***No***
FLT07-3PH	Ok	Ok	Ok
FLT08-3PH	Ok	Ok	Ok
FLT09-3PH	Ok	Ok	Ok
FLT10-3PH	Ok	Ok	Ok
FLT11-3PH	Ok	Ok	Ok
FLT12-3PH	N/a	N/a	Ok
FLT13-3PH	Ok	Ok	Ok
FLT14-3PH	Ok	Ok	Ok
FLT15-3PH	Ok	Ok	Ok
FLT16-3PH	Ok	Ok	Ok
FLT17-3PH	Ok	Ok	N/a
FLT18-3PH	Ok	Ok	Ok
FLT19-3PH	Ok	Ok	Ok
FLT20-3PH	Ok	Ok	Ok
FLT21-3PH	Ok	Ok	Ok
FLT22-3PH	Ok	Ok	Ok
FLT23-3PH	Ok	Ok	Ok
FLT24-3PH	Ok	Ok	Ok
FLT25-3PH	Ok	Ok	Ok
FLT26-3PH	Ok	Ok	Ok
FLT27-3PH	Ok	Ok	Ok
FLT28-3PH	Ok	Ok	Ok
FLT29-3PH	Ok	Ok	Ok
FLT30-3PH	Ok	Ok	Ok
FLT31-3PH	Ok	Ok	Ok
FLT32-3PH	Ok	Ok	Ok
FLT33-3PH	Ok	Ok	Ok
FLT34-3PH	Ok	Ok	Ok
FLT35-3PH	Ok	Ok	Ok
FLT36-3PH	Ok	Ok	Ok
FLT37-3PH	Ok	Ok	Ok
FLT38-3PH	Ok	Ok	Ok
FLT39-PO	Ok	Ok	Ok
FLT40-PO	Ok	***No***	Ok
FLT41-PO	Ok	Ok	Ok
FLT42-PO	***No***	***No***	***No***
FLT43-PO	Ok	Ok	Ok
FLT44-SB	Ok	Ok	Ok
FLT45-SB	Ok	Ok	Ok
FLT46-SB	Ok	Ok	Ok

Contingency Name	GEN-2014-037		
	2015 SP	2015 WP	2025 SP
FLT47-PO	Ok	Ok	Ok
FLT48-SB	Ok	Ok	Ok
FLT49-SB	Ok	Ok	Ok
FLT50-SB	Ok	Ok	Ok
FLT51-NF	Ok	Ok	Ok

Table 8: Mitigation measures required for Standalone scenario (GEN-2014-037)

Contingency Name	Base case	Mitigations required		
		New 345 kV Transmission line	Generator Voltage/Frequency tripping disabled	Runback GEN-2014-037
FLT01-3PH	2015 WP	-	GEN-2006-044 (Tripped by under frequency)	-
FLT04-3PH	2015 SP	Yes	-	-
	2015 WP	Yes	-	-
	2025 SP	Yes	-	-
FLT06-3PH	2015 SP	Yes	-	-
	2015 WP	Yes	-	-
	2025 SP	Yes	-	-
FLT40-PO	2015 WP	-	GEN-2006-044 (Tripped by over frequency and under voltage)	-
FLT42-PO (*)	2015 SP	Yes	GEN-2006-044 (Tripped by over frequency)	Reduce to 50%
	2015 WP	Yes	GEN-2006-044 (Tripped by over frequency)	Reduce to 50%
	2025 SP	Yes	GEN-2006-044 (Tripped by over frequency)	-

For FLT42-PO (*), while the network recovers to a steady-state (with the mitigations applied), there are high frequency oscillations in prior queue project GEN-2006-044 generator power and machine terminal voltage occurring for approximately: 10 seconds post-fault clearing for 2015 SP base case; 2.5 seconds for the 2015 WP base case; and approximately 3 seconds for the 2025 SP base case. As a specific scenario FLT42-PO was re-run with the mitigations applied, except that GEN-2006-044 voltage/frequency trip relays were **en**abled – the outcome is that GEN-2006-044 trips after fault clearing and the high frequency oscillations have been removed. This indicates there may be an issue with the dynamic model for GEN-2006-044.

5.4 Standalone scenario (GEN-2014-038)

The standalone scenario results for GEN-2014-038 are summarized in Table 9 – where "No" indicates system unstable, and "N/a" indicates not applicable. The contingency descriptions are as stated in Table 5 for each contingency name. The detailed dynamic simulation plots for all the contingencies can be found in Appendix E.

A number of contingencies were found to be unstable:

- 2015 SP – 4 unstable contingencies
- 2015 WP – 4 unstable contingencies
- 2025 SP – 4 unstable contingencies

The reasons for the unstable contingencies were:

1. One prior queue wind generator – GEN-2006-044 – was tripped by frequency tripping relay for two contingencies for differing base cases.

   The contingencies were re-tested with the over/under frequency and over/under voltage tripping relays disabled resulting in a stable outcome.

2. Contingencies FLT04-3PH, FLT06-3PH, FLT40-3PH, and FLT42-3PH resulted in post fault instability.

   The power output from the wind generators mainly flows through two paths: Hitchland-Beaver County-Woodward and Hitchland-Finney- Holcomb. Tripping any of these two paths will force power flow through the other path, which causes voltage collapse or low voltage along the in-service transfer path.

   Re-testing with the following mitigations resulted in a stable outcome:

   - A new 345 kV line from Beaver County 345 kV to Grapevine 345 kV (a new substation) to Chisholm 345kV.
   - For some base cases a runback of GEN-2014-038 was also required.

The unstable contingencies together with the mitigation measures applied are summarized in Table 10 for each base case. After the mitigations shown were applied the contingencies were re-tested and a stable outcome was achieved. The detailed dynamic simulation plots with mitigation measures are included in Appendix E.

Table 9: Summary of stability results for standalone scenario (GEN-2014-038)

Contingency Name	GEN-2014-038		
	2015 SP	2015 WP	2025 SP
FLT01-3PH	Ok	Ok	Ok
FLT02-3PH	Ok	Ok	Ok
FLT03-3PH	Ok	Ok	Ok
FLT04-3PH	*No*	*No*	*No*

Contingency Name	GEN-2014-038		
	2015 SP	2015 WP	2025 SP
FLT05-3PH	Ok	Ok	Ok
FLT06-3PH	*No*	*No*	*No*
FLT07-3PH	Ok	Ok	Ok
FLT08-3PH	Ok	Ok	Ok
FLT09-3PH	Ok	Ok	Ok
FLT10-3PH	Ok	Ok	Ok
FLT11-3PH	Ok	Ok	Ok
FLT12-3PH	N/a	N/a	Ok
FLT13-3PH	Ok	Ok	Ok
FLT14-3PH	Ok	Ok	Ok
FLT15-3PH	Ok	Ok	Ok
FLT16-3PH	N/a	N/a	N/a
FLT17-3PH	N/a	N/a	N/a
FLT18-3PH	N/a	N/a	N/a
FLT19-3PH	N/a	N/a	N/a
FLT20-3PH	N/a	N/a	N/a
FLT21-3PH	N/a	N/a	N/a
FLT22-3PH	N/a	N/a	N/a
FLT23-3PH	Ok	Ok	Ok
FLT24-3PH	Ok	Ok	Ok
FLT25-3PH	Ok	Ok	Ok
FLT26-3PH	Ok	Ok	Ok
FLT27-3PH	Ok	Ok	Ok
FLT28-3PH	Ok	Ok	Ok
FLT29-3PH	Ok	Ok	Ok
FLT30-3PH	Ok	Ok	Ok
FLT31-3PH	Ok	Ok	Ok
FLT32-3PH	Ok	Ok	Ok
FLT33-3PH	Ok	Ok	Ok
FLT34-3PH	Ok	Ok	Ok
FLT35-3PH	Ok	Ok	Ok
FLT36-3PH	Ok	Ok	Ok
FLT37-3PH	Ok	Ok	Ok
FLT38-3PH	Ok	Ok	Ok
FLT39-PO	Ok	Ok	Ok
FLT40-PO	*No*	*No*	*No*
FLT41-PO	Ok	Ok	Ok
FLT42-PO	*No*	*No*	*No*
FLT43-PO	Ok	Ok	Ok
FLT44-SB	Ok	Ok	Ok
FLT45-SB	Ok	Ok	Ok
FLT46-SB	Ok	Ok	Ok
FLT47-PO	N/a	N/a	N/a
FLT48-SB	Ok	Ok	Ok
FLT49-SB	Ok	Ok	Ok
FLT50-SB	Ok	Ok	Ok
FLT51-NF	Ok	Ok	Ok

Table 10: Mitigation measures required for Standalone scenario (GEN-2014-038)

Contingency Name	Base case	Mitigations required		
		New 345 kV Transmission line	Generator Voltage/Frequency tripping disabled	Runback GEN-2014-038
FLT04-3PH	2015 SP	Yes	N/a	-
	2015 WP	Yes	N/a	-
	2025 SP	Yes	N/a	-
FLT06-3PH	2015 SP	Yes	N/a	-
	2015 WP	Yes	N/a	-
	2025 SP	Yes	N/a	-
FLT40-PO	2025 SP	-	GEN-2006-044 (Tripped by under freuqency)	-
FLT42-PO	2015 SP	Yes	GEN-2006-044 (Tripped by over frequency)	Reduce to 25%
	2015 WP	Yes	GEN-2006-044 (Tripped by over frequency)	Reduce to 25%
	2025 SP	Yes	GEN-2006-044 (Tripped by over frequency)	-

For FLT42-PO (*), while the network recovers to a steady-state (with the mitigations applied), there are high frequency oscillations in prior queue project GEN-2006-044 generator power and machine terminal voltage occurring for approximately approximately 2 seconds post-fault clearing for the three base cases: 2015 SP, 2015 WP, and 2025 SP.

As a specific scenario FLT42-PO was re-run with the mitigations applied, except that GEN-2006-044 voltage/frequency trip relays were **en**abled – the outcome is that GEN-2006-044 trips after fault clearing and the high frequency oscillations have been removed. This indicates there may be an issue with the dynamic model for GEN-2006-044.

5.5 Standalone scenario (GEN-2015-006)

The standalone scenario results for GEN-2015-006 are summarized in Table 11 – where “No” indicates system unstable, and “N/a” indicates not applicable. The contingency descriptions are as stated in Table 5 for each contingency name. The detailed dynamic simulation plots for all the contingencies can be found in Appendix F.

A number of contingencies were found to be unstable:

- 2015 SP – 3 unstable contingencies
- 2015 WP – 4 unstable contingencies
- 2025 SP – 3 unstable contingencies

The reasons for the unstable contingencies were:

1. One prior queue wind generator – GEN-2006-044 – was tripped by frequency tripping relay for two contingencies for differing base cases.

   The contingencies were re-tested with the over/under frequency and over/under voltage tripping relays disabled resulting in a stable outcome.

2. Contingencies FLT04-3PH, FLT06-3PH, and FLT42-3PH resulted in post fault instability.

   The power output from the wind generators mainly flows through two paths: Hitchland-Beaver County-Woodward and Hitchland-Finney- Holcomb. Tripping any of these two paths will force power flow through the other path, which causes voltage collapse or low voltage along the in-service transfer path.

   Re-testing with the following mitigations resulted in a stable outcome:

   - A new 345 kV line from Beaver County 345 kV to Grapevine 345 kV (a new substation) to Chisholm 345kV.
   - For some base cases a runback of GEN-2015-006 was also required.

The unstable contingencies together with the mitigation measures applied are summarized in Table 12 for each base case. After the mitigations shown were applied the contingencies were re-tested and a stable outcome was achieved. The detailed dynamic simulation plots with mitigation measures are included in Appendix F.

Table 11: Summary of stability results for standalone scenario (GEN-2015-006)

Contingency Name	GEN-2015-006		
	2015 SP	2015 WP	2025 SP
FLT01-3PH	Ok	Ok	Ok
FLT02-3PH	Ok	Ok	Ok
FLT03-3PH	Ok	Ok	Ok
FLT04-3PH	***No***	***No***	***No***
FLT05-3PH	Ok	Ok	Ok
FLT06-3PH	***No***	***No***	***No***
FLT07-3PH	Ok	Ok	Ok
FLT08-3PH	Ok	Ok	Ok
FLT09-3PH	Ok	Ok	Ok
FLT10-3PH	Ok	Ok	Ok
FLT11-3PH	Ok	Ok	Ok
FLT12-3PH	N/a	N/a	Ok
FLT13-3PH	Ok	Ok	Ok
FLT14-3PH	Ok	Ok	Ok
FLT15-3PH	Ok	Ok	Ok
FLT16-3PH	Ok	Ok	Ok
FLT17-3PH	Ok	Ok	N/a
FLT18-3PH	Ok	Ok	Ok
FLT19-3PH	Ok	Ok	Ok
FLT20-3PH	Ok	Ok	Ok
FLT21-3PH	Ok	Ok	Ok
FLT22-3PH	Ok	Ok	Ok
FLT23-3PH	Ok	Ok	Ok
FLT24-3PH	Ok	Ok	Ok
FLT25-3PH	Ok	Ok	Ok
FLT26-3PH	Ok	Ok	Ok
FLT27-3PH	Ok	Ok	Ok
FLT28-3PH	Ok	Ok	Ok
FLT29-3PH	Ok	Ok	Ok
FLT30-3PH	Ok	Ok	Ok
FLT31-3PH	Ok	Ok	Ok
FLT32-3PH	Ok	Ok	Ok
FLT33-3PH	Ok	Ok	Ok
FLT34-3PH	N/a	N/a	N/a
FLT35-3PH	N/a	N/a	N/a
FLT36-3PH	N/a	N/a	N/a
FLT37-3PH	N/a	N/a	N/a
FLT38-3PH	Ok	Ok	Ok
FLT39-PO	Ok	Ok	Ok
FLT40-PO	Ok	***No***	Ok
FLT41-PO	Ok	Ok	Ok
FLT42-PO	***No***	***No***	***No***
FLT43-PO	Ok	Ok	Ok
FLT44-SB	Ok	Ok	Ok
FLT45-SB	Ok	Ok	Ok
FLT46-SB	Ok	Ok	Ok

Contingency Name	GEN-2015-006		
	2015 SP	2015 WP	2025 SP
FLT47-PO	Ok	Ok	Ok
FLT48-SB	Ok	Ok	Ok
FLT49-SB	Ok	Ok	Ok
FLT50-SB	Ok	Ok	Ok
FLT51-NF	Ok	Ok	Ok

Table 12: Mitigation measures required for Standalone scenario (GEN-2015-006)

Contingency Name	Base case	Mitigations required		
		New 345 kV Transmission line	Generator Voltage/Frequency tripping disabled	Runback GEN-2015-006
FLT04-3PH	2015 SP	Yes	-	-
	2015 WP	Yes	-	-
	2025 SP	Yes	-	-
FLT06-3PH	2015 SP	Yes	-	-
	2015 WP	Yes	-	-
	2025 SP	Yes	-	-
FLT40-PO	2025 SP	N/a	GEN-2006-044 (Tripped by under freuqency)	-
FLT42-PO (*)	2015 SP	Yes	GEN-2006-044 (Tripped by over frequency)	Reduce to 50%
	2015 WP	Yes	GEN-2006-044 (Tripped by over frequency)	Reduce to 25%
	2025 SP	Yes	GEN-2006-044 (Tripped by over frequency)	-

For FLT42-PO (*), while the network recovers to a steady-state (with the mitigations applied), there are high frequency oscillations in prior queue project GEN-2006-044 generator power and machine terminal voltage occurring for approximately approximately 2 seconds post-fault clearing for the three base cases: 2015 SP, 2015 WP, and 2025 SP.

As a specific scenario FLT42-PO was re-run with the mitigations applied, except that GEN-2006-044 voltage/frequency trip relays were **en**abled – the outcome is that GEN-2006-044 trips after fault clearing and the high frequency oscillations have been removed. This indicates there may be an issue with the dynamic model for GEN-2006-044.

6 Power factor analysis

Power factor analysis is to determine the reactive compensation required to hold the scheduled voltage at the POI. The analysis was performed on the Cluster Scenario only.

The projects were turned off during the power factor analysis and replaced by a generator with no VAr capability on the HV bus of the projects. Each generator was dispatched at 100% output of the project. A VAr generator was modeled at the same HV bus and set to hold a voltage schedule at the POI consistent with the voltage schedule in the provided base case or 1.0 pu voltage (whichever is higher). The reactive power of the VAr generator is determined from the power flow calculations. All three phase faults listed on Table 5 except prior outage faults were applied, and the power factor is monitored.

Note that all the wind farms connected to the POI of Beaver County 345kV, including the prior queued projects, are switched off when carrying out the study for GEN-2015-006. Therefore, the active power used for GEN-2015-006 power factor calculation is the total active power of all the wind farms connected to the same POI, including GEN-2015-006 and the prior queued projects.

The power factor analysis results for the listed faults are shown in Table 13, Table 14 and Table 15 . The results presented show that additional sources of reactive power are needed to support the voltage at the studied area. Under contingency FLT29-3PH, for instance, the reactive power needed is very high and power factors are very low in the three scenarios, especially for GEN-2014-037 and GEN-2014-038.

Table 13: Power factor analysis for 2015 SP base case

Contingency	GEN-2014-037			GEN-2014-038			GEN-2015-006		
	Q (MVAr)	Power Factor		Q (MVAr)	Power Factor		Q (MVAr)	Power Factor	
Base_Case	99.4	0.895	Lag	-1.6	1.000	Lead	116	0.997	Lag
FLT01-3PH	94.9	0.903	Lag	0.3	1.000	Lag	119.1	0.996	Lag
FLT02-3PH	102.3	0.890	Lag	-0.5	1.000	Lead	114.8	0.997	Lag
FLT03-3PH	145.9	0.808	Lag	28.2	0.990	Lag	157.3	0.994	Lag
FLT05-3PH	276.9	0.586	Lag	120.6	0.856	Lag	265.4	0.983	Lag
FLT08-3PH	130.1	0.838	Lag	19.4	0.995	Lag	111.2	0.997	Lag
FLT10-3PH	138.9	0.821	Lag	13.8	0.998	Lag	163.2	0.993	Lag
FLT11-3PH	115.3	0.866	Lag	19.4	0.995	Lag	87.4	0.998	Lag
FLT13-3PH	106.6	0.882	Lag	2.7	1.000	Lag	123.9	0.996	Lag
FLT14-3PH	106.6	0.882	Lag	0	1.000	Lead	124.7	0.996	Lag
FLT15-3PH	214.9	0.681	Lag	47.9	0.972	Lag	226.3	0.987	Lag
FLT16-3PH	102.6	0.890	Lag	-0.8	1.000	Lead	119.6	0.996	Lag
FLT17-3PH	104.7	0.886	Lag	16.6	0.997	Lag	70	0.999	Lag
FLT18-3PH	97.6	0.899	Lag	-0.7	1.000	Lead	112.5	0.997	Lag
FLT20-3PH	107	0.882	Lag	1.8	1.000	Lag	136.3	0.995	Lag
FLT22-3PH	98.4	0.897	Lag	-1.4	1.000	Lead	109.3	0.997	Lag

Contingency	GEN-2014-037			GEN-2014-038			GEN-2015-006		
	Q (MVAr)	Power Factor		Q (MVAr)	Power Factor		Q (MVAr)	Power Factor	
FLT23-3PH	399	0.448	Lag	205.2	0.698	Lag	541.5	0.933	Lag
FLT24-3PH	105.1	0.885	Lag	3.7	1.000	Lag	120.1	0.996	Lag
FLT25-3PH	201.9	0.704	Lag	25.8	0.992	Lag	188.6	0.991	Lag
FLT26-3PH	103.5	0.888	Lag	-0.2	1.000	Lead	115.5	0.997	Lag
FLT27-3PH	114.7	0.867	Lag	7.9	0.999	Lag	122.6	0.996	Lag
FLT28-3PH	104.7	0.886	Lag	14.5	0.997	Lag	130.8	0.996	Lag
FLT29-3PH	419.2	0.431	Lag	219.8	0.673	Lag	Blown Up	Blown Up	
FLT30-3PH	173.7	0.755	Lag	40.9	0.980	Lag	267.8	0.982	Lag
FLT31-3PH	174.7	0.753	Lag	58.9	0.959	Lag	164.7	0.993	Lag
FLT32-3PH	117.9	0.861	Lag	-41.8	0.979	Lead	122.2	0.996	Lag
FLT33-3PH	120.5	0.857	Lag	9.7	0.999	Lag	118.3	0.996	Lag
FLT34-3PH	100.1	0.894	Lag	-0.5	1.000	Lead	116.4	0.997	Lag
FLT35-3PH	99.3	0.896	Lag	-5.3	1.000	Lead	116.7	0.997	Lag
FLT36-3PH	104	0.887	Lag	2.8	1.000	Lag	119.9	0.996	Lag
FLT37-3PH	107.8	0.880	Lag	1.2	1.000	Lag	124.5	0.996	Lag
FLT38-3PH	105.6	0.884	Lag	2.5	1.000	Lag	104	0.997	Lag

Table 14: Power factor analysis for 2015 WP base case

Contingency	GEN-2014-037			GEN-2014-038			GEN-2015-006		
	Q (MVAr)	Power Factor		Q (MVAr)	Power Factor		Q (MVAr)	Power Factor	
Base_Case	123.7	0.850	Lag	3.2	1.000	Lag	149.8	0.994	Lag
FLT01-3PH	115.7	0.866	Lag	3.9	1.000	Lag	151.5	0.994	Lag
FLT02-3PH	126.8	0.845	Lag	3.9	1.000	Lag	148.1	0.994	Lag
FLT03-3PH	172.2	0.758	Lag	34.7	0.985	Lag	190.9	0.991	Lag
FLT05-3PH	314.1	0.537	Lag	135.4	0.828	Lag	307.6	0.977	Lag
FLT08-3PH	161.5	0.778	Lag	28.6	0.990	Lag	148.1	0.994	Lag
FLT10-3PH	159.1	0.783	Lag	20.5	0.995	Lag	190.6	0.991	Lag
FLT11-3PH	143.3	0.813	Lag	27	0.991	Lag	122.6	0.996	Lag
FLT13-3PH	131.4	0.836	Lag	8.4	0.999	Lag	157.3	0.994	Lag
FLT14-3PH	121.4	0.855	Lag	3.2	1.000	Lag	147.1	0.995	Lag
FLT15-3PH	242.7	0.636	Lag	57.1	0.962	Lag	258.4	0.983	Lag
FLT16-3PH	126.7	0.845	Lag	4.1	1.000	Lag	152.7	0.994	Lag
FLT17-3PH	128.7	0.841	Lag	21.9	0.994	Lag	94.9	0.998	Lag
FLT18-3PH	121.3	0.855	Lag	3.7	1.000	Lag	145.6	0.995	Lag

Contingency	GEN-2014-037			GEN-2014-038			GEN-2015-006		
	Q (MVAr)	Power Factor		Q (MVAr)	Power Factor		Q (MVAr)	Power Factor	
FLT20-3PH	132.7	0.833	Lag	7.8	0.999	Lag	170.9	0.993	Lag
FLT22-3PH	123.4	0.851	Lag	3.8	1.000	Lag	143.7	0.995	Lag
FLT23-3PH	472.3	0.390	Lag	255.3	0.617	Lag	Blown Up	Blown Up	
FLT24-3PH	128.4	0.842	Lag	7	0.999	Lag	152.1	0.994	Lag
FLT25-3PH	217.5	0.677	Lag	34.7	0.985	Lag	215.3	0.988	Lag
FLT27-3PH	138	0.823	Lag	13.2	0.998	Lag	153.8	0.994	Lag
FLT28-3PH	137.6	0.824	Lag	21	0.995	Lag	162.7	0.993	Lag
FLT29-3PH	432	0.420	Lag	220.6	0.672	Lag	Blown Up	Blown Up	
FLT30-3PH	182.3	0.739	Lag	37.4	0.983	Lag	288	0.979	Lag
FLT31-3PH	190.7	0.724	Lag	67.3	0.948	Lag	193	0.991	Lag
FLT32-3PH	136	0.827	Lag	-45.7	0.975	Lead	152.3	0.994	Lag
FLT33-3PH	136.9	0.825	Lag	12.7	0.998	Lag	153.4	0.994	Lag
FLT34-3PH	122.9	0.852	Lag	1.5	1.000	Lag	149.4	0.994	Lag
FLT35-3PH	121.9	0.854	Lag	-3	1.000	Lead	149.7	0.994	Lag
FLT36-3PH	130.6	0.837	Lag	8.3	0.999	Lag	155.6	0.994	Lag
FLT37-3PH	138.6	0.822	Lag	9.5	0.999	Lag	163.9	0.993	Lag
FLT38-3PH	132.1	0.834	Lag	8.2	0.999	Lag	151.7	0.994	Lag

Table 15: Power factor analysis for 2025 SP base case

Contingency	GEN-2014-037			GEN-2014-038			GEN-2015-006		
	Q (MVAr)	Power Factor		Q (MVAr)	Power Factor		Q (MVAr)	Power Factor	
Base_Case	-14.8	0.997	Lead	-12.7	0.998	Lead	44.5	0.999	Lag
FLT01-3PH	-7.9	0.999	Lead	-11	0.998	Lead	47.2	0.999	Lag
FLT02-3PH	-6.5	0.999	Lead	-15	0.997	Lead	44.1	1.000	Lag
FLT03-3PH	27.3	0.991	Lag	4.7	1.000	Lag	67.6	0.999	Lag
FLT05-3PH	141.5	0.816	Lag	83.2	0.923	Lag	135.1	0.995	Lag
FLT08-3PH	-0.8	1.000	Lead	-10.8	0.999	Lead	46.9	0.999	Lag
FLT10-3PH	-5.6	1.000	Lead	-6.8	0.999	Lead	49.8	0.999	Lag
FLT11-3PH	-10.7	0.999	Lead	-10.5	0.999	Lead	45.3	0.999	Lag
FLT13-3PH	-11.6	0.998	Lead	-12.2	0.998	Lead	46.4	0.999	Lag
FLT14-3PH	-26	0.992	Lead	-1.1	1.000	Lead	33.8	1.000	Lag
FLT15-3PH	-5.3	1.000	Lead	-18.4	0.996	Lead	51.7	0.999	Lag
FLT16-3PH	-15.6	0.997	Lead	-12.2	0.998	Lead	43.8	1.000	Lag
FLT18-3PH	-15.7	0.997	Lead	-11.1	0.998	Lead	43.5	1.000	Lag
FLT20-3PH	-5.6	1.000	Lead	-12.1	0.998	Lead	54.3	0.999	Lag

Contingency	GEN-2014-037			GEN-2014-038			GEN-2015-006		
	Q (MVAr)	Power Factor		Q (MVAr)	Power Factor		Q (MVAr)	Power Factor	
FLT22-3PH	-16.6	0.997	Lead	-12.4	0.998	Lead	41.9	1.000	Lag
FLT23-3PH	189.2	0.726	Lag	105.5	0.884	Lag	195.2	0.990	Lag
FLT24-3PH	-5	1.000	Lead	-6.5	0.999	Lead	48.3	0.999	Lag
FLT25-3PH	150.4	0.799	Lag	1.9	1.000	Lag	119	0.996	Lag
FLT27-3PH	-6.2	1.000	Lead	-7.2	0.999	Lead	48.2	0.999	Lag
FLT28-3PH	7.9	0.999	Lag	13.4	0.998	Lag	55.8	0.999	Lag
FLT29-3PH	158	0.785	Lag	90.9	0.910	Lag	279.9	0.981	Lag
FLT30-3PH	61.3	0.956	Lag	23.2	0.993	Lag	138.3	0.995	Lag
FLT31-3PH	120	0.857	Lag	32.4	0.987	Lag	93.2	0.998	Lag
FLT32-3PH	51.1	0.969	Lag	-39.9	0.981	Lead	62.9	0.999	Lag
FLT33-3PH	-6.1	1.000	Lead	-8.1	0.999	Lead	46.8	0.999	Lag
FLT34-3PH	-13.1	0.998	Lead	-10.1	0.999	Lead	44.9	0.999	Lag
FLT35-3PH	-14.1	0.998	Lead	-16.2	0.997	Lead	45	0.999	Lag
FLT36-3PH	-8.5	0.999	Lead	-12	0.998	Lead	48.1	0.999	Lag
FLT37-3PH	-5	1.000	Lead	-21.1	0.994	Lead	52.2	0.999	Lag
FLT38-3PH	-13.3	0.998	Lead	-13.3	0.998	Lead	38.5	1.000	Lag

An analysis on the project for low wind/no wind conditions on the Cluster Scenario only was also carried out. The analysis consisted of the following:

- The generator and capacitor bank (if installed) were switched out of service with the collector system as modeled remaining in service.
- The resulting reactive power injection into the transmission network comes from the capacitance of the project's transmission lines and collector cables. This reactive power injection is measured at the POI. Shunt reactors were added at the study project substation high side bus to bring the MVAr flow into the POI down to approximately zero.

The results of this analysis are summarized in Table 16.

Table 16: Reactive power from the project's transmission lines

Request	Reactive Power Injection at POI (MVAr)	Shunt Reactors required at High Voltage Buses (MVAr)
GEN-2014-037	4.4	4.4
GEN-2014-038	1.9	1.9
GEN-2015-006	8.6	8.6

7 Conclusions

7.1 Cluster scenario

Fifty-one contingencies including no-fault contingency were simulated for each of the three base cases: 2015 summer peak, 2015 winter peak, and 2025 summer peak.

A number of contingencies were found to be unstable and mitigations were required to enable a stable outcome to be achieved. This occurred for contingencies related to the transfer paths of Hitchland-Beaver County-Woodward and Hitchland-Finney- Holcomb:

- FLT04-3PH, FLT06-3PH, FLT39-PO, FLT40-PO and FLT42-PO.

Mitigations that were tested included one or more of the following:

- A new 345 kV line from Beaver County 345 kV to Grapevine 345 kV (a new substation) to Chisholm 345kV.
- A runback of Group 02 generators to 50% or 25% output, or tripping of the generators.
- Disabling of prior queue project wind farm voltage and/or frequency tripping relays.

Once the mitigations were applied:

- Group 02 wind generators (as listed in Table 1) are able to ride through all the contingencies tested and the transient recovery voltage at the POIs remains within a 0.7 to 1.2 pu range following fault clearance;
- No tripping of prior queue projects occurs;
- No large rotor angle deviation and oscillations (as per SPP Disturbance Performance Requirements) occurring for the synchronous generators in the monitored areas (the rotor angle deviation is less than 1 degree for the synchronous generators).

7.2 Standalone scenario, GEN-2014-037

Fifty-one contingencies including no-fault contingency were simulated for each of the three base cases: 2015 summer peak, 2015 winter peak, and 2025 summer peak.

A number of contingencies were found to be unstable and mitigations were required to enable a stable outcome to be achieved. This occurred for contingencies mainly related to the transfer paths of Hitchland-Beaver County-Woodward and Hitchland-Finney- Holcomb:

- FLT01-3PH, FLT04-3PH, FLT06-3PH, FLT39-PO, FLT40-PO and FLT42-PO.

Mitigations that were tested included one or more of the following:

- A new 345 kV line from Beaver County 345 kV to Grapevine 345 kV (a new substation) to Chisholm 345kV.
- A runback of GEN-2014-037 generator to 50% .
- Disabling of prior queue project wind farm voltage and/or frequency tripping relays.

Once the mitigations were applied:

- GEN-2014-037 is able to ride through all the contingencies tested and the transient recovery voltage at the POI remains within a 0.7 to 1.2 pu range following fault clearance;
- No tripping of prior queue projects occurs;
- No large rotor angle deviation and oscillations (as per SPP Disturbance Performance Requirements) occurring for the synchronous generators in the monitored areas (the rotor angle deviation is less than 1 degree for the synchronous generators).

7.3 Standalone scenario, GEN-2014-038

Forty-three contingencies including no-fault contingency were simulated for each of the three base cases: 2015 summer peak, 2015 winter peak, and 2025 summer peak.

A number of contingencies were found to be unstable and mitigations were required to enable a stable outcome to be achieved. This occurred for contingencies related to the transfer paths of Hitchland-Beaver County-Woodward and Hitchland-Finney- Holcomb:

- FLT04-3PH, FLT06-3PH, FLT40-PO and FLT42-PO.

Mitigations that were tested included one or more of the following:

- A new 345 kV line from Beaver County 345 kV to Grapevine 345 kV (a new substation) to Chisholm 345kV.
- A runback of GEN-2014-038 generators to 25% output.
- Disabling of prior queue project wind farm voltage and/or frequency tripping relays.

Once the mitigations were applied:

- GEN-2014-038 is able to ride through all the contingencies tested and the transient recovery voltage at the POI remains within a 0.7 to 1.2 pu range following fault clearance;
- No tripping of prior queue projects occurs;
- No large rotor angle deviation and oscillations (as per SPP Disturbance Performance Requirements) occurring for the synchronous generators in the monitored areas (the rotor angle deviation is less than 1 degree for the synchronous generators).

7.4 Standalone scenario, GEN-2015-006

Forty-seven contingencies including no-fault contingency were simulated for each of the three base cases: 2015 summer peak, 2015 winter peak, and 2025 summer peak.

A number of contingencies were found to be unstable and mitigations were required to enable a stable outcome to be achieved. This occurred for contingencies related to the transfer paths of Hitchland-Beaver County-Woodward and Hitchland-Finney- Holcomb:

- FLT04-3PH, FLT06-3PH, FLT40-PO and FLT42-PO.

Mitigations that were tested included one or more of the following:

- A new 345 kV line from Beaver County 345 kV to Grapevine 345 kV (a new substation) to Chisholm 345kV.
- A runback of GEN-2015-006 generator to 50% or 25% output.
- Disabling of prior queue project wind farm voltage and/or frequency tripping relays.

Once the mitigations were applied:

- GEN-2015-006 is able to ride through all the contingencies tested and the transient recovery voltage at the POI remains within a 0.7 to 1.2 pu range following fault clearance;
- No tripping of prior queue projects occurs;
- No large rotor angle deviation and oscillations (as per SPP Disturbance Performance Requirements) occurring for the synchronous generators in the monitored areas (the rotor angle deviation is less than 1 degree for the synchronous generators).

7.5 Prior queue project issues

A possible issue with prior queue project GEN-2006-044 dynamic model was identified whereby for FLT42-PO, after mitigations were applied, it causes high frequency oscillations in power output and machine terminal voltage post fault clearing for several seconds before stabilising. This was found to be consistent across all three base cases for the cluster, and all three standalone assessments. Enabling the voltage/frequency trip relays for GEN-2006-044 resulted in it tripping post-fault and the high frequency oscillations have been removed.

Appendix A Southwest Power Pool Disturbance Performance Requirements

Southwest Power Pool
Disturbance Performance Requirements

OVERVIEW

These Disturbance Performance Requirements ("Requirements") shall be applicable to the Bulk Electric System within the Southwest Power Pool Planning Area. Utilization of these Requirements applies to all registered entities within the Southwest Power Pool Planning Area. These Requirements shall not be applicable to facilities that are not part of Bulk Electric System. More stringent Requirements are at the sole discretion of each Transmission Owner.

Transient and dynamic stability assessments are generally performed to assure adequate avoidance of loss of generator synchronism and prevention of system voltage collapse within the first 20 seconds after a system disturbance. These Requirements provide a basis for evaluating the system response during the initial transient period following a disturbance on the Bulk Electric System by establishing minimum requirements for machine rotor angle damping and transient voltage recovery.

ROTOR ANGLE DAMPING REQUIREMENT

Machine Rotor Angles shall exhibit well damped angular oscillations [as defined below] and acceptable power swings following a disturbance on the Bulk Electric System for all NERC Category A, B and C events.

Well damped angular oscillations shall meet one of the following two requirements when calculated directly from the rotor angle:

1. Successive Positive Peak Ratio (SPPR) must be less than or equal to 0.95 where SPPR is calculated as follows:

$$\text{SPPR} = \frac{\text{Peak Rotor Angle of 2}^{\text{nd}}\text{ Positive Swing Peak}}{\text{Peak Rotor Angle of 1}^{\text{st}}\text{ Positive Swing Peak}} \leq 0.95$$

-or- Damping Factor % = (1 – SPPR) x 100% $\geq$ 5%

The machine rotor angle damping ratio may be determined by appropriate modal analysis (i.e. Prony Analysis) where the following equivalent requirement must be met:

Damping Ratio $\geq$ 0.0081633

2. Successive Positive Peak Ratio Five (SPPR5) must be less than or equal to 0.774 where SPPR5 is calculated as follows:

$$\text{SPPR5} = \frac{\text{Peak Rotor Angle of } 5^{th} \text{ Positive Swing Peak}}{\text{Peak Rotor Angle of } 1^{st} \text{ Positive Swing Peak}} \leq 0.774$$

-or- Damping Factor % = (1 – SPPR) x 100% $\geq$ 22.6%

The machine rotor angle damping ratio may be determined by appropriate modal analysis (i.e. Prony Analysis) where the following equivalent requirement must be met:

Damping Ratio $\geq$ 0.0081633

Qualitatively, these Requirements are shown in the figure below.

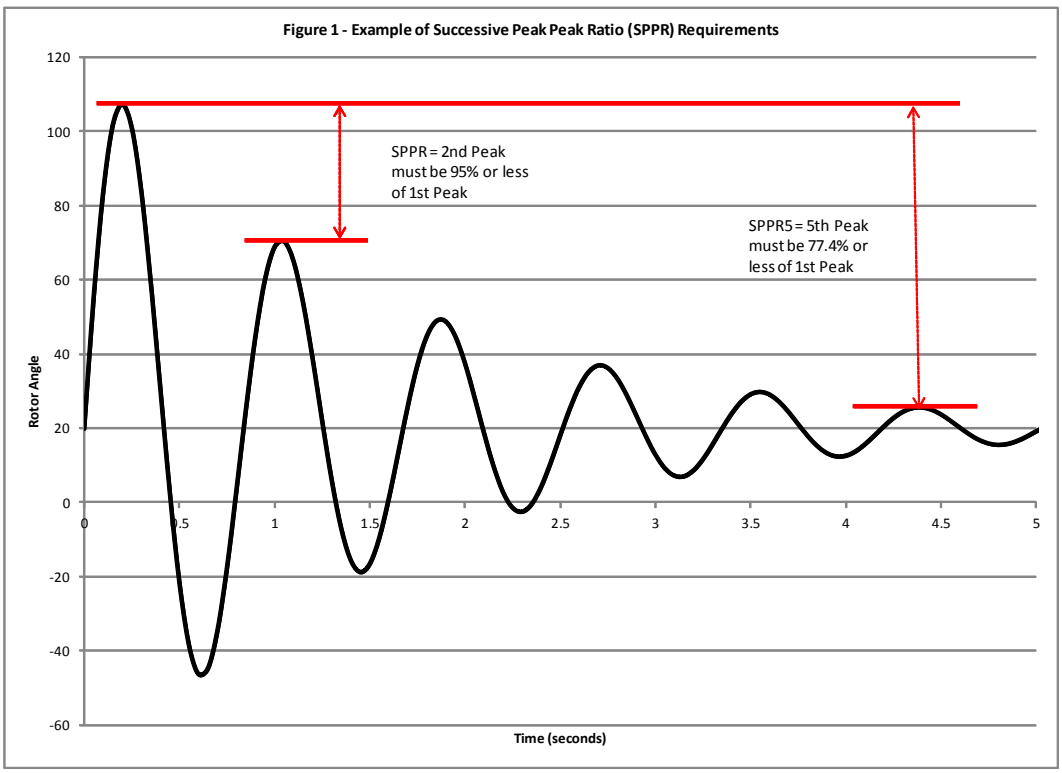

TRANSIENT VOLTAGE RECOVERY REQUIREMENT

Any time after a disturbance is cleared; bus voltages on the Bulk Electric System shall not swing outside of the bandwidth of 0.70 per unit to 1.20 per unit.

Qualitatively, this Requirement is shown in the figure below.

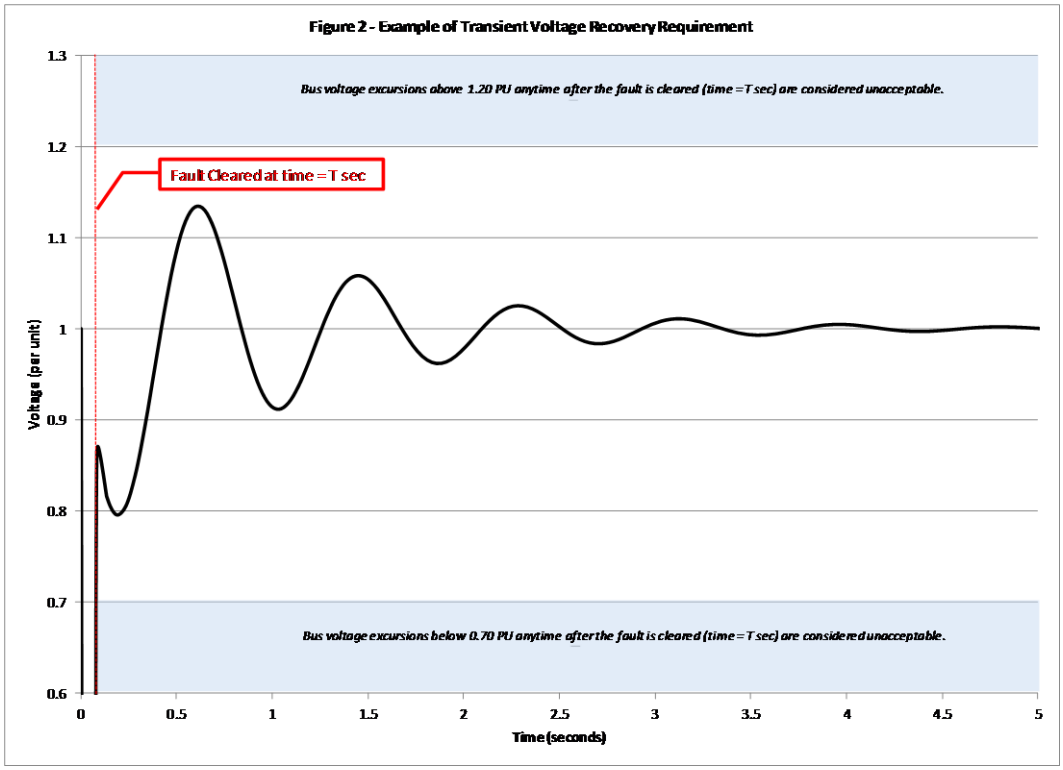
Figure 2 - Example of Transient Voltage Recovery Requirement
Bus voltage excursions above 1.20 PU anytime after the fault is cleared (time = T sec) are considered unacceptable.
Fault Cleared at time = T sec
Bus voltage excursions below 0.70 PU anytime after the fault is cleared (time = T sec) are considered unacceptable.
Voltage (per unit)
1.3
1.2
1.1
1
0.9
0.8
0.7
0.6
0
0.5
1
1.5
2
2.5
3
3.5
4
4.5
5
Time (seconds)

Appendix B Project dynamic model data

```
/ ***** GEN-2014-037 Meridian Wind *****
/ V110 VCSS 2.0 MW 60 Hz Mk10 (VestasWT_7_6_0_PSSE32.lib)
584213 'USRMDL' '1'  'VWCOR6' 1 1 2 45 23 104 1 0
 2000.0000 690.0000 903.3041 700.0000 2.6200 0.9676 0.0232 1.9807 8.3333
1.9807 8.3333 30.0000 0.2000 1.2000 0.1000 0.0012 0.9925 0.0474 1.6118 0.0000
351.8584  161.5343 0.0300 0.0000 0.0300 0.3000 0.0000 1.0000 0.3183 4.9736
2812227.1900 43.2960 90.0120 600000.0000 3.0000 0.0000 0.0000 0.0000 0.0000
0.0000 0.0000 0.0000  0.0000 0.0000 0.0000/
0 'USRMDL' 0 'VWVAR6' 8 0 2 0 0 30 584213 '1'  /
0 'USRMDL' 0 'VWLVR6' 8 0 3 65 10 35 584213 '1' 1
 0.9000 0.0010 0.1500 18.6316 74.5430 74.5430 74.5430 0.5000 1.0000 2.6200
0.9676 1.2000 0.5000 690.0000 903.3041 0.3500 0.0500 0.2500 0.0200 3.0000
4.0000 9999.0000 0.0232 0.9000 0.9000 0.0500 0.0000 0.0100 0.0000 2.0000
0.0000 1.0000 0.0000 0.0000 0.0000 0.0000 0.0000 0.0000 0.0000 0.0000 0.0000
0.0000 0.0000 0.0000 0.0000 0.0000 0.0000 0.0000 0.0000 0.0000 0.0000 0.0000
0.0000 0.0000 0.0000 0.0000  0.0000 0.0000 0.0000 0.0000 0.0000 0.0000 0.0000
0.0000 0.0000 /
0 'USRMDL' 0 'VWPWR6' 8 0 3 30 7 10 584213 '1' 1
 1.0000 0.5000 -0.5000 0.6988 0.8844 0.9800 0.9600 0.2000 0.2000 1.0000
1.0000 0.0000 0.0000 0.1000 0.1000 0.0000 0.0000 0.0000 0.0000 0.0000 0.0000
 0.0000 0.0000 0.0000 0.0000 0.0000 0.0000 0.0000 0.0000 0.0000 /
0 'USRMDL' 0 'VWMEC6' 8 0 2 10 8 0 584213 '1'
 2000.0000 422.2301 4736.7543 420.7500 83.5000 6188.8071 39.3992 0.0000
0.0000 0.0000 /
0 'USRMDL' 0 'VWMEA6' 8 0 2 10 8 5 584213 '1'
 0.1000 0.1000 0.1000 0.0000 0.0000 0.0000 0.0000  0.0000 0.0000 0.0000/
0 'USRMDL' 0 'VWVPR6' 0 2 7 30 0 18 584213 '1'  1 1 0 0 0
 0.8500 11.0000 0.8500 11.0000 0.9000 60.0000 1.1000 60.0000 1.1500 2.0000
1.2000 0.0800 1.2500 0.0050 1.2500 0.0050 0.0000 0.0000 0.0000 0.0000 0.0000
 0.0000 0.0000 0.1500 0.8000 2.7000 0.8500 3.5000 0.9000 5.0000 /
0 'USRMDL' 0 'VWFPR6' 0 2 3 12 0 7 584213 '1'  0
 56.4000 0.2000 56.4000 0.2000 56.4000 0.2000 63.6000  0.2000 63.6000 0.2000
63.6000 0.2000 /
584216 'USRMDL' '1'  'VWCOR6' 1 1 2 45 23 104 1 0
 2000.0000 690.0000 903.3041 700.0000 2.6200 0.9676 0.0232
 1.9807 8.3333 1.9807 8.3333 30.0000 0.2000 1.2000 0.1000 0.0012 0.9925
0.0474 1.6118 0.0000 351.8584 161.5343 0.0300 0.0000 0.0300 0.3000 0.0000
1.0000 0.3183 4.9736 2812227.1900 43.2960 90.0120 600000.0000 3.0000 0.0000
0.0000 0.0000 0.0000 0.0000 0.0000 0.0000 0.0000 0.0000 0.0000/
0 'USRMDL' 0 'VWVAR6' 8 0 2 0 0 30 584216 '1'  /
0 'USRMDL' 0 'VWLVR6' 8 0 3 65 10 35 584216 '1' 1
 0.9000 0.0010 0.1500 18.6316 74.5430 74.5430 74.5430 0.5000 1.0000 2.6200
0.9676 1.2000 0.5000 690.0000 903.3041 0.3500 0.0500 0.2500 0.0200 3.0000
4.0000
 9999.0000 0.0232 0.9000 0.9000 0.0500 0.0000 0.0100 0.0000 2.0000 0.0000
1.0000 0.0 0.0 0.0 0.0 0.0 0.0 0.0 0.0 0.0 0.0 0.0 0.0 0.0 0.0 0.0 0.0 0.0
0.0 0.0 0.0 0.0 0.0 0.0 0.0 0.0 0.0 0.0 0.0 0.0 0.0 0.0 0.0 0.0 0.0 /
0 'USRMDL' 0 'VWPWR6' 8 0 3 30 7 10 584216 '1' 1
 1.0000 0.5000 -0.5000 0.6988 0.8844 0.9800 0.9600 0.2000 0.2000 1.0000
1.0000 0.0000 0.0000 0.1000 0.1000 0.0000 0.0000 0.0000 0.0000 0.0000 0.0000
0.0000 0.0000 0.0000 0.0000 0.0000 0.0000 0.0000 0.0000 0.0000 /
```

```
0 'USRMDL' 0 'VWMEC6' 8 0 2 10 8 0 584216 '1'
 2000.0000 422.2301 4736.7543 420.7500 83.5000 6188.8071 39.3992 0.0000
0.0000 0.0000 /
0 'USRMDL' 0 'VWMEA6' 8 0 2 10 8 5 584216 '1'
 0.1000 0.1000 0.1000 0.0000 0.0000 0.0000 0.0000 0.0000 0.0000 0.0000/
0 'USRMDL' 0 'VWVPR6' 0 2 7 30 0 18 584216 '1'  1 1 0 0 0
 0.8500 11.0000 0.8500 11.0000 0.9000 60.0000 1.1000 60.0000 1.1500 2.0000
1.2000 0.0800 1.2500 0.0050 1.2500 0.0050 0.0000 0.0000 0.0000 0.0000 0.0000
0.0000 0.0000 0.1500 0.8000 2.7000 0.8500 3.5000 0.9000 5.0000 /
0 'USRMDL' 0 'VWFPR6' 0 2 3 12 0 7 584216 '1'  0
 56.4000 0.2000 56.4000 0.2000 56.4000 0.2000 63.6000 0.2000 63.6000 0.2000
63.6000 0.2000 /
/
/ ***** GEN-2014-038 Wolf Creek Wind *****
/ V110 VCSS 2.0 MW 60 Hz Mk10 (VestasWT_7_6_0_PSSE32.lib)
584293 'USRMDL' '1'  'VWCOR6' 1 1 2 45 23 104 1 0
 2000.0000 690.0000 903.3041 700.0000 2.6200 0.9676 0.0232 1.9807 8.3333
1.9807 8.3333 30.0000 0.2000 1.2000 0.1000 0.0012 0.9925 0.0474 1.6118 0.0000
351.8584 161.5343 0.0300 0.0000 0.0300 0.3000 0.0000 1.0000 0.3183 4.9736
2812227.1900 43.2960 90.0120 600000.0000 3.0000 0.0000 0.0000 0.0000 0.0000
0.0000 0.0000 0.0000 0.0000 0.0000 0.0000/
0 'USRMDL' 0 'VWVAR6' 8 0 2 0 0 30 584293 '1'  /
0 'USRMDL' 0 'VWLVR6' 8 0 3 65 10 35 584293 '1' 1
 0.9000 0.0010 0.1500 18.6316 74.5430 74.5430 74.5430 0.5000 1.0000 2.6200
0.9676 1.2000 0.5000 690.0000 903.3041 0.3500 0.0500 0.2500 0.0200 3.0000
4.0000 9999.0000 0.0232 0.9000 0.9000 0.0500 0.0000 0.0100 0.0000 2.0000
0.0000 1.0000 0.0 0.0 0.0 0.0 0.0 0.0 0.0 0.0 0.0 0.0 0.0 0.0 0.0 0.0 0.0 0.0
0.0 0.0 0.0 0.0 0.0 0.0 0.0 0.0 0.0 0.0 0.0 0.0 0.0 0.0 0.0 0.0 0.0 /
0 'USRMDL' 0 'VWPWR6' 8 0 3 30 7 10 584293 '1' 1
 1.0000 0.5000 -0.5000 0.6988 0.8844 0.9800 0.9600 0.2000 0.2000 1.0000
1.0000 0.0000 0.0000 0.1000 0.1000 0.0000 0.0000 0.0000 0.0000 0.0000 0.0000
0.0000 0.0000 0.0000 0.0000 0.0000 0.0000 0.0000 0.0000 0.0000 /
0 'USRMDL' 0 'VWMEC6' 8 0 2 10 8 0 584293 '1'
 2000.0000 422.2301 4736.7543 420.7500 83.5000 6188.8071 39.3992 0.0000
0.0000 0.0000 /
0 'USRMDL' 0 'VWMEA6' 8 0 2 10 8 5 584293 '1'
 0.1000 0.1000 0.1000 0.0000 0.0000 0.0000 0.0000 0.0000 0.0000 0.0000/
0 'USRMDL' 0 'VWVPR6' 0 2 7 30 0 18 584293 '1'  1 1 0 0 0
 0.8500 11.0000 0.8500 11.0000 0.9000 60.0000 1.1000 60.0000 1.1500 2.0000
1.2000 0.0800 1.2500 0.0050 1.2500 0.0050 0.0000 0.0000 0.0000 0.0000 0.0000
0.0000 0.0000 0.1500 0.8000 2.7000 0.8500 3.5000 0.9000 5.0000 /
0 'USRMDL' 0 'VWFPR6' 0 2 3 12 0 7 584293 '1'  0
 56.4000 0.2000 56.4000 0.2000 56.4000 0.2000 63.6000 0.2000 63.6000 0.2000
63.6000 0.2000 /
584296 'USRMDL' '1'  'VWCOR6' 1 1 2 45 23 104 1 0
 2000.0000 690.0000 903.3041 700.0000 2.6200 0.9676 0.0232 1.9807 8.3333
1.9807 8.3333 30.0000 0.2000 1.2000 0.1000 0.0012 0.9925 0.0474 1.6118 0.0000
351.8584 161.5343 0.0300 0.0000 0.0300 0.3000 0.0000 1.0000 0.3183 4.9736
2812227.1900 43.2960 90.0120 600000.0000 3.0000 0.0000 0.0000 0.0000 0.0000
0.0000 0.0000 0.0000 0.0000 0.0000 0.0000/
0 'USRMDL' 0 'VWVAR6' 8 0 2 0 0 30 584296 '1'  /
0 'USRMDL' 0 'VWLVR6' 8 0 3 65 10 35 584296 '1' 1
 0.9000 0.0010 0.1500 18.6316 74.5430 74.5430 74.5430 0.5000 1.0000 2.6200
0.9676 1.2000 0.5000 690.0000 903.3041 0.3500 0.0500 0.2500 0.0200 3.0000
```

```
4.0000 9999.0000 0.0232 0.9000 0.9000 0.0500 0.0000 0.0100 0.0000 2.0000
0.0000 1.0000 0.0 0.0 0.0 0.0 0.0 0.0 0.0 0.0 0.0 0.0 0.0 0.0 0.0 0.0 0.0 0.0
0.0 0.0 0.0 0.0 0.0 0.0 0.0 0.0 0.0 0.0 0.0 0.0 0.0 0.0 0.0000 0.0 0.0 /
0 'USRMDL' 0 'VWPWR6' 8 0 3 30 7 10 584296 '1' 1
 1.0000 0.5000 -0.5000 0.6988 0.8844 0.9800 0.9600 0.2000 0.2000 1.0000
1.0000 0.0000 0.0000 0.1000 0.1000 0.0000 0.0000 0.0000 0.0000 0.0000 0.0000
0.0000 0.0000 0.0000 0.0000 0.0000 0.0000 0.0000 0.0000 0.0000 /
0 'USRMDL' 0 'VWMEC6' 8 0 2 10 8 0 584296 '1'
 2000.0000 422.2301 4736.7543 420.7500 83.5000 6188.8071 39.3992 0.0000
0.0000 0.0000 /
0 'USRMDL' 0 'VWMEA6' 8 0 2 10 8 5 584296 '1'
 0.1000 0.1000 0.1000 0.0000 0.0000 0.0000 0.0000 0.0000 0.0000 0.0000/
0 'USRMDL' 0 'VWVPR6' 0 2 7 30 0 18 584296 '1'  1 1 0 0 0
 0.8500 11.0000 0.8500 11.0000 0.9000 60.0000 1.1000 60.0000 1.1500 2.0000
1.2000 0.0800 1.2500 0.0050 1.2500 0.0050 0.0000 0.0000 0.0000 0.0000 0.0000
0.0000 0.0000 0.1500 0.8000 2.7000 0.8500 3.5000 0.9000 5.0000 /
0 'USRMDL' 0 'VWFPR6' 0 2 3 12 0 7 584296 '1'  0
 56.4000 0.2000 56.4000 0.2000 56.4000 0.2000 63.6000 0.2000 63.6000 0.2000
63.6000 0.2000 /


/ ***** GEN-2015-006 Balko Wind II, LLC Phase 2 *****
/ V100 VCSS 2.0 MW 60 Hz Mk7H (VestasWT_7_6_0_PSSE32.lib)
584503 'USRMDL' '1'  'VWCOR6' 1 1 2 45 23 104 1 0
 2000.0000 690.0000 1514.6603 700.0000 1.5625 0.9676 0.0232 1.9807 8.3333
1.9807 8.3333 30.0000 0.2000 1.2000 0.1000 0.0012 0.9925 0.0474 1.6118 0.0000
351.8584 313.4245 0.0300 0.0000 0.0300 0.3000 0.0000 1.0000 0.3183 4.9736
2812227.1900 43.2960 90.0120 600000.0000 3.0000 0.0000 0.0000 0.0000 0.0000
0.0000 0.0000 0.0000 0.0000 0.0000 0.0000/
0 'USRMDL' 0 'VWVAR6' 8 0 2 0 0 30 584503 '1'  /
0 'USRMDL' 0 'VWLVR6' 8 0 3 65 10 35 584503 '1' 1
 0.9000 0.0010 0.2000 44.4555 11.1114 44.4555 44.4555 0.5000 1.0000 1.5625
0.9676 1.2000 0.5000 690.0000 1514.6603 0.3500 0.0500 0.2500 0.0200 3.0000
4.0000 9999.0 0.0232 0.9000 0.9000 0.0500 0.0 0.0100 0.0 2.0 0.0 1.0000 0.0
0.0 0.0 0.0 0.0 0.0 0.0 0.0 0.0 0.0 0.0 0.0 0.0 0.0 0.0 0.0 0.0 0.0 0.0 0.0
0.0 0.0 0.0 0.0 0.0 0.0 0.0 0.0 0.0 0.0 0.0 0.0 0.0 /
0 'USRMDL' 0 'VWPWR6' 8 0 3 30 7 10 584503 '1' 1
 1.0000 0.5000 -0.5000 0.6988 0.8844 0.9800 0.9600 0.2000 0.2000 1.3000
0.0500 0.5000 0.5000 0.1000 0.1000 0.0000 0.0000 0.0000 0.0000 0.0000 0.0000
0.0000 0.0000 0.0000 0.0000 0.0000 0.0000 0.0000 0.0000 0.0000 /
0 'USRMDL' 0 'VWMEC6' 8 0 2 10 8 0 584503 '1'
 2000.0000 351.8584 5684.1051 569.9822 106.4850 7976.7600 50.7400 0.0000
0.0000 0.0000 /
0 'USRMDL' 0 'VWMEA6' 8 0 2 10 8 5 584503 '1'
 0.1000 0.1000 0.1000 0.0000 0.0000 0.0000 0.0000 0.0000 0.0000 0.0000/
0 'USRMDL' 0 'VWVPR6' 0 2 7 30 0 18 584503 '1'  1 1 0 0 0
 0.8500 11.0000 0.8500 11.0000 0.9000 60.0000 1.1000 60.0000 1.1500 2.0000
1.2000 0.0800 1.2500 0.0050 1.2500 0.0050 0.0000 0.0000 0.0000 0.0000 0.0000
0.0000 0.0000 0.1500 0.8000 2.7000 0.8500 3.5000 0.9000 5.0000 /
0 'USRMDL' 0 'VWFPR6' 0 2 3 12 0 7 584503 '1'  0
56.4 0.2 56.4 0.2 56.4 0.2 63.6 0.2 63.6 0.2000 63.6000 0.2000 /
```

Appendix C Results from Stability Analysis Results for Cluster scenario

The following files contain the cluster scenario stability plots for each contingency without mitigations for each of the three base cases:

- “15sp.pdf”
- “15wp.pdf”
- “25sp.pdf”

The following files contain the cluster scenario stability plots that were re-tested for each contingency that required mitigation(s), for each of the three base cases:

- “rt-15sp.pdf”
- “rt-15wp.pdf”
- “rt-25sp.pdf”

The following file contains the cluster scenario stability plots re-tested for FLT42 with mitigations applied, but GEN-2006-044 voltage/frequency trip relays **en**abled required – the file contains the stability plots for each of the three base cases:

- “FLT42 rt-GEN-2006-044 relays enabled_Cluster.pdf”

Appendix D Stability Analysis Results for Standalone Scenario (GEN-2014-037)

The following files contain the standalone scenario (GEN-2014-037) stability plots for each contingency without mitigations for each of the three base cases:

- “15sp-sa-g37.pdf”
- “15wp-sa-g37.pdf”
- “25sp-sa-g37.pdf”

The following files contain the standalone scenario (GEN-2014-037) stability plots that were re-tested for each contingency that required mitigation(s), for each of the three base cases:

- “rt-15sp-sa-g37.pdf”
- “rt-15wp-sa-g37.pdf”
- “rt-25sp-sa-g37.pdf”

The following file contains the cluster scenario stability plots re-tested for FLT42 with mitigations applied, but GEN-2006-044 voltage/frequency trip relays **en**abled required – the file contains the stability plots for each of the three base cases:

- “FLT42 rt-GEN-2006-044 relays enabled_sa-g37.pdf”

Appendix E Stability Analysis Results for Standalone Scenario (GEN-2014-038)

The following files contain the standalone scenario (GEN-2014-038) stability plots for each contingency without mitigations for each of the three base cases:

- “15sp-sa-g38.pdf”
- “15wp-sa-g38.pdf”
- “25sp-sa-g38.pdf”

The following files contain the standalone scenario (GEN-2014-037) stability plots that were re-tested for each contingency that required mitigation(s), for each of the three base cases:

- “rt-15sp-sa-g38.pdf”
- “rt-15wp-sa-g38.pdf”
- “rt-25sp-sa-g38.pdf”

The following file contains the cluster scenario stability plots re-tested for FLT42 with mitigations applied, but GEN-2006-044 voltage/frequency trip relays **en**abled required – the file contains the stability plots for each of the three base cases:

- “FLT42 rt-GEN-2006-044 relays enabled_sa-g38.pdf”

Appendix F Stability Analysis Results for Standalone Scenario (GEN-2015-006)

The following files contain the standalone scenario (GEN-2015-006) stability plots for each contingency without mitigations for each of the three base cases:

- “15sp-sa-g06.pdf”
- “15wp-sa-g06.pdf”
- “25sp-sa-g06.pdf”

The following files contain the standalone scenario (GEN-2015-006) stability plots that were re-tested for each contingency that required mitigation(s), for each of the three base cases:

- “rt-15sp-sa-g06.pdf”
- “rt-15wp-sa-g06.pdf”
- “rt-25sp-sa-g06.pdf”

The following file contains the cluster scenario stability plots re-tested for FLT42 with mitigations applied, but GEN-2006-044 voltage/frequency trip relays **en**abled required – the file contains the stability plots for each of the three base cases:

- “FLT42 rt-GEN-2006-044 relays enabled_sa-g06.pdf”

L: Group 3 Dynamic Stability Analysis Report

See S&C study report on next page

S&C ELECTRIC COMPANY
Excellence Through Innovation

DISIS-2015-001 (GROUP 03)

LITTLE ROCK, AR

SOUTHWEST POWER POOL

DEFINITIVE INTERCONNECTION SYSTEM IMPACT STUDY

S&C PROJECT NUMBER: 9406

DOCUMENT NUMBER: E-850

REVISION: 1

FINAL REPORT

CONFIDENTIAL

AUGUST 24, 2015

DISCLAIMER

THIS DOCUMENT WAS PREPARED AND PROVIDED PURSUANT TO A CONTRACT WITH CUSTOMER AND/OR END USER THAT DEFINES THE PARTIES RESPECTIVE RIGHTS TO WORK PRODUCT AND INTELLECTUAL PROPERTY. ANY OTHER USE OF THIS DOCUMENT IS STRICTLY PROHIBITED. ALL OTHER RIGHTS ARE RESERVED AND NO LICENSE OR RIGHTS TO THE SUBJECT MATTER OF THIS DOCUMENT ARE GRANTED BY POSSESSION THEREOF.

REPORT REVISION HISTORY:

REV	DATE	PREPARED BY	REVIEWED BY	APPROVED BY	DESCRIPTION
A	07/16/2015	NCA	SK	EHC	Preliminary report issued.
0	07/24/2015	NCA	SK	EHC	Final report issued.
1	08/24/2015	NCA	SK	EHC	GEN-2015-021 is revised in the Executive Summary.

AUTHORS:

Prepared By:

Namrata Asarpota
Design Engineer
S&C Electric Company

Reviewed By:

Saeed Kamalinia
Senior Engineer
S&C Electric Company

Approved By:

Ernst Camm
Manager – Consulting and Analytical Services
S&C Electric Company

TABLE OF CONTENTS

1. Executive Summary 6
2. Introduction 8
3. Transmission System and Study Area 11
4. Power Flow Base Cases 12
5. Power Flow Model 13
6. Dynamic Stability Analysis 15
   6.1. Assumptions 15
   6.2. Stability Criteria 15
   6.3. Dynamic Stability Results 16
7. Power Factor Analysis 22
   7.1. Power Factor Requirements at the Point of Interconnection 22
   7.2. Power Factor Analysis Results 22
8. No Wind Conditions Analysis 25
9. Short-Circuit Study 26
10. Conclusions and Recommendations 27

LIST OF FIGURES

Figure 1. Simplified one-line diagrams of the interconnection requests (a) GEN-2015-021, (b) GEN-2015-026, (c) GEN-2015-027, and (d) ASGI-2015-001. 14

LIST OF TABLES

Table 1: Generation Interconnection Requests in Group 3 9
Table 2: Prior Queued Projects 10
Table 3: Summary of Transient Stability Results 17
Table 4: Generators tripping during Contingency #6 20
Table 5: Extended ride-through parameters of the generator GEN-2015-021 21
Table 6: Base Case Voltages at the POI of the Generation Interconnection Request 22
Table 7: Interconnection Request Power Factor Requirements outside 0.95 leading to 0.95 lagging 23

Table 8: Summary of Power Factor Analysis at the POI 24
Table 9: Inductive Reactive Power (i.e. Shunt Reactor) Required at the High-Voltage Side Main Transformer of the Wind Farm to Offset the Capacitive Reactive Power Injected by the Project (Mvar) 25
Table 10: Fault Definitions (Group 3) Specified by SPP 2

LIST OF APPENDICES

Appendix A
SPP's Fault Definitions for Group 3
Appendix B
Southwest Power Pool Disturbance Performance Requirements
Appendix C
Dynamic Stability Plots For Cluster Scenario
1)
Dynamic Stability Plots For 2015 Summer Peak Case
(See Appendix C-1 Submitted in a Separate File)
2)
Dynamic Stability Plots For 2015 Winter Peak Case
(See Appendix C-2 Submitted in a Separate File)
3)
Dynamic Stability Plots For 2025 Summer Peak Case
(See Appendix C-3 Submitted in a Separate File)
Appendix D
Dynamic Stability Plots For Stand-Alone Scenario
1)
"GEN-2015-021"
Dynamic Stability Plots For 2015 Summer Peak Case
(See Appendix D-1 Submitted in a Separate File)
2)
"GEN-2015-021"
Dynamic Stability Plots For 2015 Winter Peak Case
(See Appendix D-2 Submitted in a Separate File)
3)
"GEN-2015-021"
Dynamic Stability Plots For 2025 Summer Peak Case
(See Appendix D-3 Submitted in a Separate File)
4)
"GEN-2015-026"

Dynamic Stability Plots For 2015 Summer Peak Case
(See Appendix D-4 Submitted in a Separate File)
5)
"GEN-2015-026"
Dynamic Stability Plots For 2015 Winter Peak Case
(See Appendix D-5 Submitted in a Separate File)
6)
"GEN-2015-026"
Dynamic Stability Plots For 2025 Summer Peak Case
(See Appendix D-6 Submitted in a Separate File)
7)
"GEN-2015-027"
Dynamic Stability Plots For 2015 Summer Peak Case
(See Appendix D-7 Submitted in a Separate File)
8)
"GEN-2015-027"
Dynamic Stability Plots For 2015 Winter Peak Case
(See Appendix D-8 Submitted in a Separate File)
9)
"GEN-2015-027"
Dynamic Stability Plots For 2025 Summer Peak Case
(See Appendix D-9 Submitted in a Separate File)
10)
"ASGI-2015-001"
Dynamic Stability Plots For 2015 Summer Peak Case
(See Appendix D-10 Submitted in a Separate File)
11)
"ASGI-2015-001"
Dynamic Stability Plots For 2015 Winter Peak Case
(See Appendix D-11 Submitted in a Separate File)
12)
"ASGI-2015-001"
Dynamic Stability Plots For 2025 Summer Peak Case
(See Appendix D-12 Submitted in a Separate File)
Appendix E
Power factor Analysis Results
Appendix F
Short-Circuit Study Results
(See Appendix F Submitted in Separate Files)

1. Executive Summary

S&C Electric Company (S&C) has performed a Definitive Interconnection System Impact Study, DISIS-2015-001 (Group 3), in response to a request through Southwest Power Pool (SPP) tariff studies. Group 3 consists of four (4) generation interconnection study projects (GEN-2015-021, GEN-2015-026, GEN-2015-027, and ASGI-2015-001). GEN-2015-021 is a solar farm project, GEN-2015-026 and GEN-2015-027 are wind farm projects, and ASGI-2015-001 is a natural gas combustion turbine project.

S&C has performed dynamic stability analysis for Group 3 under Cluster and Stand-Alone scenarios. For the Cluster scenario, the aforementioned four interconnection requests and prior-queued projects specified in the scope of work were studied at 100% output power using the Cluster base cases (2015 Summer Peak and Winter Peak Cases and 2025 Summer Peak Case) provided by SPP. For the Stand-Alone scenario, the individual interconnection request was added in SPP's Stand-Alone base case and was dispatched in accordance with SPP's supplied dispatch. There are four (4) Stand-Alone models for each season.

The results of dynamic stability analysis under Cluster and Stand-Alone scenarios indicated that, except during Contingency #6, Group 3 is expected to successfully ride through each N-1, N-1-1, and N-2 fault contingencies specified by SPP and the nearby areas will retain frequency and voltage stability. The generator G12-024-GEN1 (bus 583373) and SSWIND 1 (bus 539762) are consistently tripping during Contingency #6. After discussion with SPP it was decided that in order to mitigate this tripping, generation curtailment shall be brought into effect. Also, during the course of the study, the generator GEN-2015-021 (located at bus 584633) tripped during several contingencies due to its over-frequency protection. This issue was discussed with SPP and turned out to be a known issue from previous studies. The recommended solution was to adopt the extended frequency ride-through setting in the dynamics model of this generator. Furthermore, the study project and nearby generators in the study area meet transient voltage recovery requirements as specified by SPP.

S&C has performed power factor analysis for Group 3 under the Cluster scenario. Requirements for the voltage schedule at the point of interconnection (POI) for the power factor analysis is 1.0 p.u. voltage or the voltage schedule in the provided base case (whichever is higher). The power

factor analyses were performed for all N-1 (or N-1-1 for prior-outage contingencies) three-phase contingencies specified by SPP. The power factor at each of the POI buses was analyzed and compared to the typical reactive capability of the wind farm from 0.95 lagging to 0.95 leading. The results of power factor analysis revealed that the solar farm represented by GEN-2015-021 and wind farms represented by GEN-2015-026 and GEN-2015-027 are required to maintain a power factor of 0.95 lagging (capacitive) to 0.95 leading (inductive) at the POI to meet SPP's requirements.

S&C has performed analysis of no wind conditions on the Cluster scenarios for wind farm projects that are interconnected to a 345-kV or 230-kV bus. The analysis consists of determining the amount of reactive power required to offset the reactive power injected by the project into the transmission network. For interconnection request project GEN-2015-026 (345 kV), applying a 4.5 Mvar, 345-kV shunt reactor can reduce the Mvar flow into the POI to approximately zero in all three Peak Cases.

S&C also performed short-circuit analysis on the power flow models for the 2025 Summer Peak Season for each generator using the Cluster Scenario model. A 3-phase fault is applied on buses up to 5 levels away from the POI of each interconnection request project and the results of the study are presented in Appendix F.

2. INTRODUCTION

S&C has performed a Definitive Interconnection System Impact Study, DISIS-2015-001, for Group 3 in response to a request through the SPP Tariff studies. Group 3 consist of four (4) new interconnection requests listed in Table 1. The study cases also contain the prior-queued projects listed in

Table 2. Group 3 and prior-queued projects were studied at 100% power output using 2015 Summer and Winter Peak Cases and 2025 Summer Peak Case provided by SPP.

Table 1: Generation Interconnection Requests in Group 3

Project	Size (MW)	Generator Model	Generator Bus	Point of Interconnection (POI)	POI Bus
GEN-2015-021	20.0	AE	584633	Johnson Corner 115 kV	531424
GEN-2015-026[1]	8.3 Uprate (173.88 Total)	Siemens	531302	Buckner 345 kV	531501
GEN-2015-027[2]	4.5 Uprate (103.845 Total)	Siemens	532003	Crooked Creek 115 kV	539783
ASGI-2015-001	4.27 Summer 6.13 Winter	GENSAL	584713	Ninnescah 115 kV	539648

1. Uprate of GEN-2010-009 (165.60 MW) for total facility rating of 173.88 MW.
2. Uprate of GEN-2008-079 (98.9 MW) for total facility rating of 103.845 MW.

Table 2: Prior Queued Projects

Request	Size (MW)	Generator Model	Point of Interconnection
GEN-2001-039A	104	GE 1.6 MW (539762)	Shooting Star 115 kV (539763)
GEN-2002-025A	150	GE 1.5 MW (542902)	Spearville 230 kV (539695)
GEN-2004-014	154.5	GE 1.5 MW (539757)	Spearville 230 kV (539695)
GEN-2005-012	250.7	Siemens 2.3 MW (539811, 539814)	Ironwood 345 kV (539803)
GEN-2006-006	205.5	GE 1.5 MW (562704)	Spearville 345 kV (531469)
GEN-2006-021	100	Clipper 2.5 MW (531215)	Flat Ridge 138 kV (539638)
GEN-2007-040	200.1	Siemens 2.3 MW (531304)	Buckner 345 kV (531501)
GEN-2008-018	250	GE 1.85 MW (523116)	Finney 345 kV (523853)
GEN-2008-079	98.9	Siemens 2.3 MW (532003)	CRKCK 115 kV line (539783)
GEN-2008-124	200.1	Siemens 2.3 MW (579483, 579486)	Ironwood 345 kV (539803)
GEN-2010-009	165.6	Siemens 2.3 MW (531302)	Buckner 345 kV (531501)
GEN-2010-045	197.8	Siemens 2.3 MW (580054, 580055)	Buckner 345 kV (531501)
GEN-2011-008	600	GE 1.6 MW (582208, 582408, 582598, 582978)	Clark County 345 kV (539800)
GEN-2011-016	200.1	Siemens 2.3 MW (582316)	Spearville 345 kV (531469)
GEN-2011-017	299	Siemens 2.3 MW (582317)	Tap on Spearville – Post Rock 345 kV line (G11-017 POI, 560242)
GEN-2012-007	85.8 Summer 120 Winter	GENSAL (531201, 531202)	Rubart 115 kV (531200)
ASGI-2012-006	20.74 Summer 21.21 Winter	GENSAL (583223)	ABBK 69 kV (531494)
GEN-2012-024	180	Vestas V112-3.0MW (583373)	Clark County 345 kV (539800)
GEN-2013-010	99	Siemens 3.0 MW (583603)	GEN-2013-010 Tap 345 kV (562334) (Tap on Spearville to Post Rock 345 kV line)
GEN-2014-049	200	GE 2.0 MW (583993)	Thistle 345 kV (539801)

3. Transmission System and Study Area

The interconnection requests in Group 3 will interconnect into Sunflower Electric Power Corporation's system (SUNC, Area # 534).

In addition to that area, the following areas were also monitored:

- American Electric Power West (AEPW, Area #520)
- Oklahoma Gas & Electric (OKGE, Area # 524)
- Western Farmers Electric corporation (WFEC, Area #525)
- Southwestern Public Services (SPS, Area #526)
- Midwest Energy (MIDW, Area #531)
- Westar Energy, Inc. (WERE, Area #536)
- Nebraska Public Power District (NPPD, Area #640)
- Omaha Public Power District (OPPD, Area #645)
- Lincoln Electric System (LES, Area #650)
- Western Area Power Administration (WAPA, Area #652)

4. Power Flow Base Cases

DISIS-2015-001 (Group 3) and prior-queued projects were modeled as aggregates of generating units. The aggregate models were part of the base case supplied by SPP. The following power flow base cases were provided by SPP:

Cluster Scenario

- **MDWG14-15SP_DIS1501_G03_Sensitivity.SAV** – 2015 Summer Peak Case, which includes aggregate representation of interconnect requests for DISIS-2015-001 (Group 3) and prior queued projects at 100% output power.
- **MDWG14-15WP_DIS1501_G03_Sensitivity.SAV** – 2015 Winter Peak Case, which includes aggregate representation of interconnect requests for DISIS-2015-001 (Group 3) and prior queued projects at 100% output power.
- **MDWG14-25SP_DIS1501_G03_Sensitivity.SAV** – 2025 Summer Peak Case, which includes aggregate representation of interconnect requests for DISIS-2015-001 (Group 3) and prior queued projects at 100% output power.

Stand-Alone Scenario

- **MDWG14-15SP_DIS1501_G03-SA.SAV** – 2015 Summer Peak Case, in which all new interconnect requests are initially disconnected and only one interconnection request will be connected under each Stand-Alone scenario.
- **MDWG14-15WP_DIS1501_G03-SA.SAV** – 2015 Winter Peak Case, in which all new interconnect requests are initially disconnected and only one interconnection request will be connected under each Stand-Alone scenario.
- **MDWG14-25SP_DIS1501_G03-SA.SAV** – 2025 Summer Peak Case, in which all new interconnect requests are initially disconnected and only one interconnection request will be connected under each Stand-Alone scenario.

5. Power Flow Model

Power flow base models for the study project were provided by SPP. The models were created in PSS/E 32.2.1. One-line diagrams for each of the interconnection request projects were created by S&C and depicted in Figure 1.

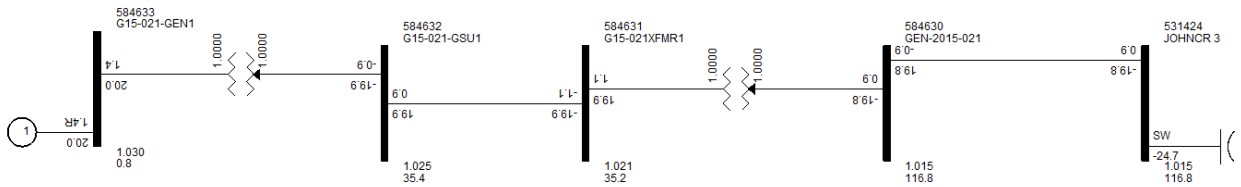

(a)

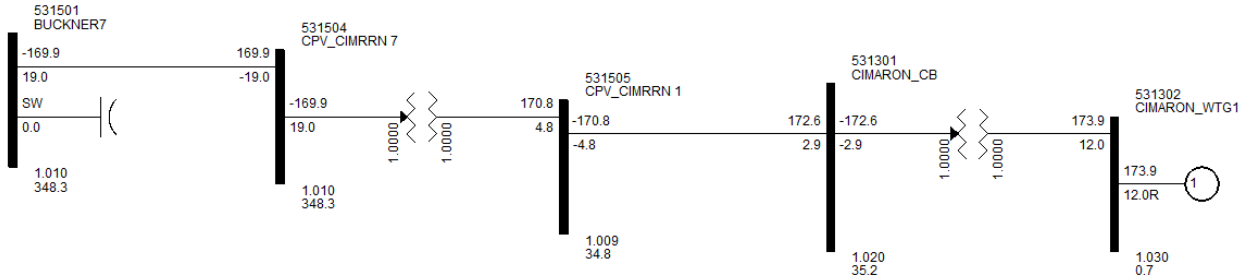

(b)

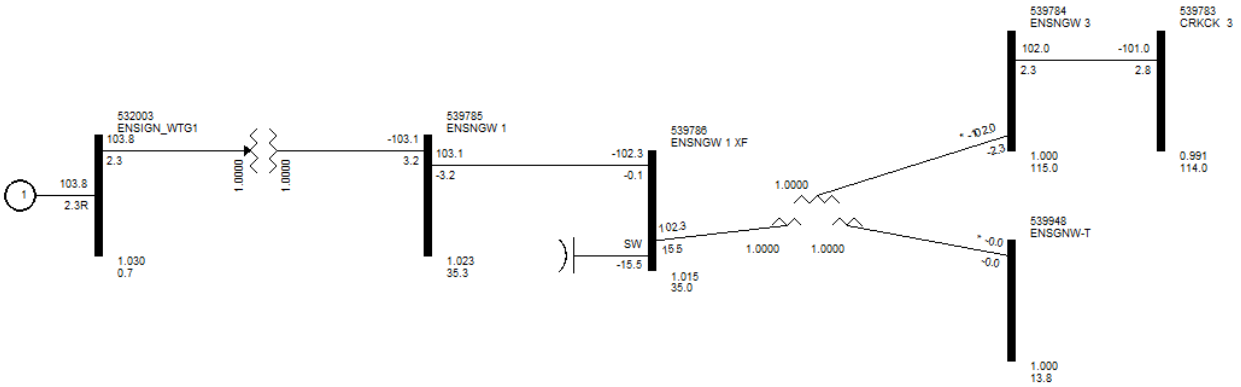

(c)

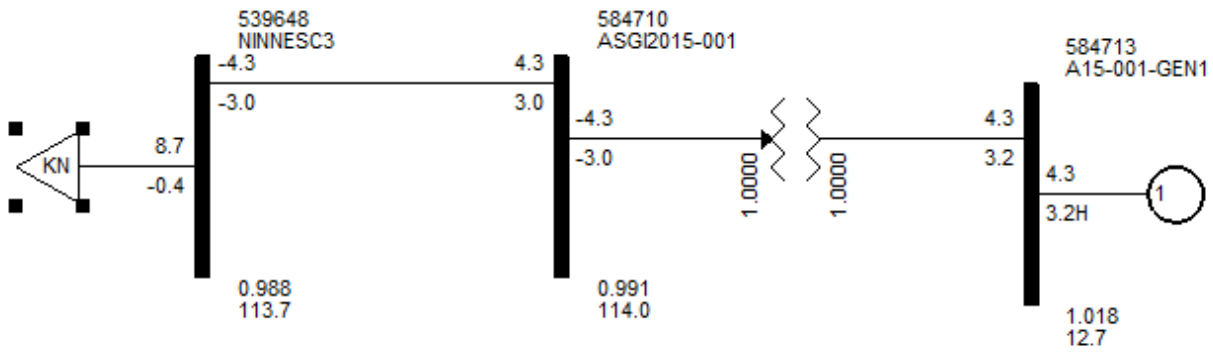

(d)

Figure 1. Simplified one-line diagrams of the interconnection requests (a) GEN-2015-021, (b) GEN-2015-026, (c) GEN-2015-027, and (d) ASGI-2015-001.

6. Dynamic Stability Analysis

6.1. Assumptions

Dynamic stability analysis was performed for the fault contingencies specified by SPP, which are listed in Appendix A.

Note that single line-to-ground faults were simulated in a manner consistent with currently accepted practices, i.e. to assume that a single line-to-ground fault will cause a positive-sequence voltage drop at the fault location to 60% of nominal. Three phase faults were simulated as bolted faults.

6.2. Stability Criteria

Disturbances, including three-phase and single-phase to ground faults, should not cause synchronous and asynchronous plants to become unstable or disconnect from the transmission grid. The criterion for synchronous generator stability as defined by NERC is: "power system stability is defined as that condition in which the difference of the angular positions of synchronous machine rotor becomes constant following an aperiodic system disturbance."

Voltage magnitudes and frequencies at terminals of asynchronous generators should not exceed magnitudes and durations that will cause protection elements to operate. Furthermore, the response after the disturbance needs to be studied at the terminals of the machine to insure that there are no sustained oscillations in power output, speed, frequency, etc.

Voltage magnitudes and angles after the disturbance should settle to a constant and acceptable operating level. Frequencies should settle to the acceptable range within nominal 60 Hz power frequency.

SPP has two specific transient stability requirements as summarized below. These requirements will be elaborated in more detail in the SPP Disturbance Performance Requirements provided in Appendix B. This document provides a basis for evaluating the system response during the initial transient period following a disturbance on the bulk electric system by establishing minimum requirements for machine rotor angle damping and transient voltage recovery.

- **Angular Oscillations**: for study projects that include synchronous machines, rotor angle oscillations should meet the damping requirements described in Appendix B. For other projects that do not include synchronous machines, but based on engineering judgment have questionable rotor angle oscillation, damping should also meet the requirements described in Appendix B.
- **Transient Voltage Recovery**: for the transient voltage recovery requirement in Appendix B, the bus voltages to be included are those at the point of interconnection for each study generator. Other voltages in the area should be checked for this requirement if the terminal voltage of other machines in the monitored area appears to have voltage recovery issues.

6.3. DYNAMIC STABILITY RESULTS

Dynamic studies were performed under Cluster and Stand-Alone scenarios for each of peak seasons. See Appendix C for dynamic stability plots of the Group 3 under Cluster scenarios. See Appendix D for dynamic stability plots for Stand-Alone scenarios. Each contingency study consists of (40) subplots:

- Subplot #1 are the (6) monitor system phase angle channels in the original snapshot file provided by SPP.
- Subplot #2 to Subplot #32 are results for (31) generators in the scope of study.
- Subplots #33 to Subplot #36 are voltages at the POI buses in the scope of study.
- Subplots #37 to Subplot #40 are frequencies at the POI buses in the scope of study.

Results of dynamic stability analysis for Cluster and Stand-Alone scenarios indicated that, with the exception of one contingency, Group 3 is expected to successfully ride through each fault contingency specified by SPP and the nearby areas will retain frequency and voltage stability. In all results, with the exception of Contingency #6, there is no observation of generator tripping or disconnection from the transmission grid. The results of the studies are summarized in Table 3.

Table 3: Summary of Transient Stability Results

Cont. No.	Cont. Name	2015 Summer Peak	2015 Winter Peak	2025 Summer Peak
1	FLT01-3PH	STABLE	STABLE	STABLE
2	FLT02-3PH	STABLE	STABLE	STABLE
3	FLT03-3PH	STABLE	STABLE	STABLE
4	FLT04-3PH	STABLE	STABLE	STABLE
5	FLT05-3PH	STABLE	STABLE	STABLE
6	FLT06-3PH	UNSTABLE Tripping of G12-024-GEN1 and SSWIND 1, followed by cascade tripping of other generators listed in Table 4 *		
7	FLT07-3PH	STABLE	STABLE	STABLE
8	FLT08-3PH	STABLE	STABLE	STABLE
9	FLT09-3PH	STABLE	STABLE	STABLE
10	FLT10-3PH	STABLE	STABLE	STABLE
11	FLT11-3PH	STABLE	STABLE	STABLE
12	FLT12-3PH	STABLE	STABLE	STABLE
13	FLT13-3PH	STABLE	STABLE	STABLE
14	FLT14-3PH	STABLE	STABLE	STABLE
15	FLT15-3PH	STABLE	STABLE	STABLE
16	FLT16-3PH	STABLE	STABLE	STABLE
17	FLT17-3PH	STABLE	STABLE	STABLE
18	FLT18-3PH	STABLE	STABLE	STABLE
19	FLT19-3PH	STABLE	STABLE	STABLE
20	FLT20-3PH	STABLE	STABLE	STABLE
21	FLT21-3PH	STABLE	STABLE	STABLE
22	FLT22-3PH	STABLE	STABLE	STABLE
23	FLT23-3PH	STABLE	STABLE	STABLE
24	FLT24-3PH	STABLE	STABLE	STABLE
25	FLT25-3PH	STABLE	STABLE	STABLE
26	FLT26-3PH	STABLE	STABLE	STABLE
27	FLT27-3PH	STABLE	STABLE	STABLE
28	FLT28-3PH	STABLE	STABLE	STABLE
29	FLT29-3PH	STABLE	STABLE	STABLE
30	FLT30-3PH	STABLE	STABLE	STABLE
31	FLT31-3PH	STABLE	STABLE	STABLE
32	FLT32-3PH	STABLE	STABLE	STABLE
33	FLT33-PO	STABLE	STABLE	STABLE
34	FLT34-PO	STABLE	STABLE	STABLE
35	FLT35-PO	STABLE	STABLE	STABLE
36	FLT36-SB	STABLE	STABLE	STABLE
37	FLT37- SB	STABLE	STABLE	STABLE
38	FLT38- SB	STABLE	STABLE	STABLE
39	FLT39- SB	STABLE	STABLE	STABLE
40	FLT40-PO	STABLE	STABLE	STABLE
41	FLT41-3PH	STABLE	STABLE	STABLE
42	FLT42-3PH	STABLE	STABLE	STABLE

Cont. No.	Cont. Name	2015 Summer Peak	2015 Winter Peak	2025 Summer Peak
43	FLT43-3PH	STABLE	STABLE	STABLE
44	FLT44-3PH	STABLE	STABLE	STABLE
45	FLT45-3PH	STABLE	STABLE	STABLE
46	FLT46-3PH	STABLE	STABLE	STABLE
47	FLT47-3PH	STABLE	STABLE	STABLE
48	FLT48-3PH	STABLE	STABLE	STABLE
49	FLT49-3PH	STABLE	STABLE	STABLE
50	FLT50-3PH	STABLE	STABLE	STABLE
51	FLT51-3PH	STABLE	STABLE	STABLE
52	FLT52-3PH	STABLE	STABLE	STABLE
53	FLT53-3PH	STABLE	STABLE	STABLE
54	FLT54-3PH	STABLE	STABLE	STABLE
55	FLT55-3PH	STABLE	STABLE	STABLE
56	FLT56-3PH	UNSTABLE Tripping of GEN-2015-021 corrected by adjusting over-frequency parameters of the generator	UNSTABLE Tripping of GEN-2015-021 corrected by adjusting over-frequency parameters of the generator	STABLE
57	FLT57-3PH	UNSTABLE Tripping of GEN-2015-021 corrected by adjusting over-frequency parameters of the generator	UNSTABLE Tripping of GEN-2015-021 corrected by adjusting over-frequency parameters of the generator	STABLE
58	FLT58-3PH	STABLE	STABLE	STABLE
59	FLT59-3PH	STABLE	STABLE	STABLE
60	FLT60-3PH	STABLE	STABLE	STABLE
61	FLT61-3PH	STABLE	STABLE	STABLE
62	FLT62-3PH	STABLE	STABLE	STABLE
63	FLT63-3PH	STABLE	STABLE	STABLE
64	FLT64-3PH	STABLE	STABLE	STABLE
65	FLT65-3PH	STABLE	STABLE	STABLE
66	FLT66-3PH	STABLE	STABLE	STABLE
67	FLT67-3PH	UNSTABLE Tripping of GEN-2015-021 corrected by adjusting over-frequency parameters of the generator	UNSTABLE Tripping of GEN-2015-021 corrected by adjusting over-frequency parameters of the generator	STABLE
68	FLT68-3PH	UNSTABLE Tripping of GEN-2015-021 corrected by adjusting over-frequency parameters of the generator response file	UNSTABLE Tripping of GEN-2015-021 corrected by adjusting over-frequency parameters of the generator response file	STABLE
69	FLT69-3PH	UNSTABLE	UNSTABLE	STABLE

Cont. No.	Cont. Name	2015 Summer Peak	2015 Winter Peak	2025 Summer Peak
		Tripping of GEN-2015-021 corrected by adjusting over-frequency parameters of the generator	Tripping of GEN-2015-021 corrected by adjusting over-frequency parameters of the generator	
70	FLT70-3PH	UNSTABLE Tripping of GEN-2015-021 corrected by adjusting over-frequency parameters of the generator	UNSTABLE Tripping of GEN-2015-021 corrected by adjusting over-frequency parameters of the generator	STABLE
71	FLT71-3PH	STABLE	STABLE	STABLE
72	FLT72-3PH	STABLE	STABLE	STABLE
73	FLT73-3PH	STABLE	STABLE	STABLE
74	FLT74-3PH	STABLE	STABLE	STABLE
75	FLT75-3PH	STABLE	STABLE	STABLE
76	FLT76-3PH	STABLE	STABLE	STABLE
77	FLT77-3PH	STABLE	STABLE	STABLE
78	FLT78-3PH	STABLE	STABLE	STABLE
79	FLT79-3PH	STABLE	STABLE	STABLE
80	FLT80-3PH	STABLE	STABLE	STABLE
81	FLT81-3PH	STABLE	STABLE	STABLE
82	FLT82-3PH	STABLE	STABLE	STABLE
83	FLT83-3PH	STABLE	STABLE	STABLE
84	FLT84-3PH	STABLE	STABLE	STABLE
85	FLT85-3PH	STABLE	STABLE	STABLE
86	FLT86-3PH	STABLE	STABLE	STABLE
87	FLT87-3PH	STABLE	STABLE	STABLE
88	FLT88-3PH	STABLE	STABLE	STABLE
89	FLT89-3PH	STABLE	STABLE	STABLE
90	FLT90-3PH	STABLE	STABLE	STABLE

* Contingency #6 is an N-2 fault contingency scenario, wherein a fault applied on the 345 kV Thistle bus (539801) is cleared by tripping the two lines connecting the 345 kV Thistle bus (539801) to the 345 kV Clark County bus (539800), followed by a consequent reclosing and tripping. In this contingency, it is observed that the generators G12-024-GEN1 (bus 583373) and SSWIND 1 (bus 539762) are tripping for most Cluster and Sand-Alone scenarios. Table 4 lists the generators tripping during Contingency #6 for different peak cases.

Table 4: Generators tripping during Contingency #6

Peak Case	Generator
Summer 2015 Cluster Case	SSWIND 1 (539762)
Winter 2015 Cluster Case	*No Tripping*
Summer 2025 Cluster Case	SSWIND 1 (539762)
	G12-024-GEN1 (583373)
	SPEARVILLE WTG (539757)
	G06-006-GEN1 (562704)
	GPW G1 (542902)
Summer 2015 Stand-Alone Cases	SSWIND 1 (539762)
	G12-024-GEN1 (583373)
Winter 2015 Stand-Alone Cases	G12-024-GEN1 (583373)
Summer 2025 Stand-Alone Cases	SSWIND 1 (539762)
	G12-024-GEN1 (583373)
	SPEARVILLE WTG (539757)
	G06-006-GEN1 (562704)
	GPW G1 (542902)

<u>SPP has stated that the tripping of generators during Contingency #6 shall be mitigated by curtailing the generation to a level that is yet to be determined.</u>

It should also be noted that during the dynamic stability simulations, GEN-2015-021 (bus 584633) tripped in several contingencies due to its over-frequency protection. After discussion with SPP, it was identified that this issue can be resolved by adjusting the over-frequency parameters of the generator's extended ride-through option in the generator's dynamic model. As

specified by SPP, the DYRE file needs to be modified so that GEN-2015-021 has frequency parameters as shown in the Table 5 below:

Table 5: Extended ride-through parameters of the generator GEN-2015-021

Description of change	**Over-frequency setpoint** (CON(J+16))	**Tripping delay time** (CON(J+17))
Existing	60.5	0.02
Recommended	62.5	2.00

In addition, Group 3 interconnection requests are expected to meet SPP's transient voltage recovery requirements.

7. POWER FACTOR ANALYSIS

7.1. POWER FACTOR REQUIREMENTS AT THE POINT OF INTERCONNECTION

SPP has specific voltage requirements for interconnecting renewable energy projects (including wind and solar generation). These interconnection projects must maintain a power factor required to hold a voltage schedule at the POI consistent with the voltage schedule in the provided base case or 1.0 p.u. voltage (whichever is higher). The voltage requirements must also be met during single (or N-1-1 for prior-outage contingencies) transmission facility outage contingencies specified by SPP. The base case voltages at the POI for each of three Peak cases are listed in Table 6. The transmission facility outage contingencies considered in the power factor analysis were specified by SPP and listed in Appendix A. The outages considered by SPP for the power factor analysis are three phase contingency conditions. Those outages are either line outages or transformer outages due to the faults. A few cases include the prior-outage condition as well as tripping of equipment due to faults. Those cases form the N-1-1 contingencies in this study.

Table 6: Base Case Voltages at the POI of the Generation Interconnection Request

Request	POI	2015 Summer Peak (p.u.)	2015 Winter Peak (p.u.)	2025 Summer Peak (p.u.)
GEN-2015-021	531424	1.009	1.013	1.015
GEN-2015-026	531501	1.010	1.012	1.010
GEN-2015-027	539783	0.994	0.997	0.991

7.2. POWER FACTOR ANALYSIS RESULTS

The results of power factor analysis are summarized in Appendix E. The power factor requirement for the interconnection projects were then compared to the required power factor at the POI. According to FERC Order No. 661-A, interconnection projects are not typically required to operate beyond a power factor range of 0.95 leading/lagging at the POI for voltages from 0.95 to 1.05 of nominal. Then, the power factor level outside of 0.95 leading to 0.95 lagging are highlighted with the pink color and summarized in table below.

Table 7: Interconnection Request Power Factor Requirements outside 0.95 leading to 0.95 lagging

GEN-2015-021

	2015 Summer Peak					2015 Winter Peak					2025 Summer Peak				
Cont. No.	P(MW)	Q(MVAR)	Power Factor		V(PU)	P(MW)	Q(MVAR)	Power Factor		V(PU)	P(MW)	Q(MVAR)	Power Factor		V(PU)
31	20.0	9.7	0.90	Lagging	1.009	20.0	8.7	0.92	Lagging	1.0132	20.0	8.3	0.92	Lagging	1.0154
56	20.0	-16.1	0.78	Leading	1.009	20.0	-4.7	0.97	Leading	1.0132	20.0	-16.1	0.78	Leading	1.0154
57	20.0	-11.3	0.87	Leading	1.009	20.0	-1.6	1.00	Leading	1.0132	20.0	-11.3	0.87	Leading	1.0154
58	20.0	-8.9	0.91	Leading	1.009	20.0	-1.2	1.00	Leading	1.0132	20.0	-8.9	0.91	Leading	1.0154
69	20.0	-8.1	0.93	Leading	1.009	20.0	-7.4	0.94	Leading	1.0132	20.0	-10.2	0.89	Leading	1.0154
70	20.0	7.3	0.97	Lagging	1.009	20.0	2.9	0.99	Lagging	1.0132	20.0	4.0	0.98	Lagging	1.0154

GEN-2015-026

	2015 Summer Peak					2015 Winter Peak					2025 Summer Peak				
Cont. No.	P(MW)	Q(MVAR)	Power Factor		V(PU)	P(MW)	Q(MVAR)	Power Factor		V(PU)	P(MW)	Q(MVAR)	Power Factor		V(PU)
5	173.9	710.2	0.93	Lagging	1.0099	173.9	75.2	0.92	Lagging	1.0115	173.9	65.3	0.94	Lagging	1.0096
8	173.9	106.6	0.85	Lagging	1.0099	173.9	109.4	0.85	Lagging	1.0115	173.9	92.4	0.88	Lagging	1.0096
12	173.9	-39.7	0.97	Leading	1.0099	173.9	-58.9	0.95	Leading	1.0115	173.9	-58.9	0.95	Leading	1.0096
17	173.9	117.9	0.83	Lagging	1.0099	173.9	141.5	0.78	Lagging	1.0115	173.9	100.4	0.87	Lagging	1.0096
21	173.9	56.1	0.95	Lagging	1.0099	173.9	38.9	0.98	Lagging	1.0115	173.9	74.7	0.92	Lagging	1.0096
33	173.9	86.3	0.90	Lagging	1.0099	173.9	95.3	0.88	Lagging	1.0115	173.9	81.6	0.91	Lagging	1.0096
34	173.9	75.9	0.92	Lagging	1.0099	173.9	81.7	0.91	Lagging	1.0115	173.9	67.6	0.93	Lagging	1.0096
40	173.9	-22.0	0.99	Leading	1.0099	173.9	-58.1	0.95	Leading	1.0115	173.9	-22.0	0.99	Leading	1.0096

Based on the results of the power factor analysis, interconnection requests should meet the following requirements listed in Table 8 to maintain nominal voltage at the POI:

Table 8: Summary of Power Factor Analysis at the POI

Request	Capacity	POI	Power Factor at POI	
			Leading (absorbing vars)	Lagging (providing vars)
GEN-2015-021	20.0 MW	Johnson Corner 115 kV (531424)	0.78	0.90
GEN-2015-026	173.9 MW	Buckner 345 kV (531501)	0.95	0.83
GEN-2015-027	102.9 MW	Crooked Creek (539783)	0.99	0.82

NOTE: Per the SPP Tariff as reactive power is required for all projects, the final requirement in the GIA will be the pro-forma 95% lagging to 95% leading at the point of interconnection.

8. No Wind Conditions Analysis

For the wind farm interconnection requests that interconnect to a 230-kV or 345-kV bus, an analysis of the project for no power production due to no or low wind conditions was performed. The analysis consists of determining the amount of reactive power required to offset the reactive power injected by the project into the transmission network. The size of a shunt reactor placed at the interconnection request project's substation high side bus to reduce the Mvar flow into the POI to approximately zero was determined. As shown in Table 9, installation of a 4.5 Mvar, 345-kV shunt reactor can reduce the Mvar flow into the POI to practically zero in all three Peak cases.

Table 9: Inductive Reactive Power (i.e. Shunt Reactor) Required at the High-Voltage Side Main Transformer of the Wind Farm to Offset the Capacitive Reactive Power Injected by the Project (Mvar)

Request	POI	2015 Summer Peak	2015 Winter Peak	2025 Summer Peak
GEN-2015-026*	531501	4.5	4.5	4.5

* Note that to accurately measure the reactive power injected only from collector system of GEN-2015-026 project, we disconnected GEN-2007-040 and GEN-2010-045 project and the switched capacitor, which share the same POI with GEN-2015-026 project.

9. SHORT-CIRCUIT STUDY

A short-circuit study has been performed on the power flow models for the 2025 Summer Peak Season for each generator using the Cluster Scenario model. Short-circuit analysis includes applying a 3-phase fault on buses up to 5 levels away from the POI of each interconnection request project. PSS/E "Automatic Sequence Fault Calculation (ASCC)" fault analysis module was used for the purpose of short-circuit analysis. The results of the short-circuit analysis have been recorded for all the buses up to five buses away from the point of interconnection of each interconnection request project. Detailed results of the short-circuit study are provided in Appendix F.

10. CONCLUSIONS AND RECOMMENDATIONS

- Dynamic analysis results under Cluster and Stand-Alone Scenarios indicate that DISIS-2015-001(Group 3) interconnection request projects are expected to successfully interconnect into the transmission system at 100% output power and at the desired location. Dynamic stability analysis also indicates that, with the exception of Contingency #6, Group 3 is expected to ride through all N-1, N-1-1, and N-2 fault contingencies specified by SPP and the nearby areas will retain angular, frequency and voltage stability. Thus, Group 3 is expected to meet SPP's transient voltage recovery requirement.
- As discussed with SPP, extended over-frequency protection settings of the generator GEN-2015-021 should be adjusted to allow ride-through capability during the fault contingencies listed in Appendix A.
- The results of power factor analysis indicate that the solar farm represented by GEN-2015-021 and the wind farms represented by GEN-2015-026 and GEN-2015-027 are required to maintain a power factor of 0.95 lagging to 0.95 leading at the POI to meet SPP's requirements.
- An analysis on the project for no-wind power production due to no or low wind conditions indicated that for GEN-2015-026, which is connected to SPP's 345-kV system, applying a 4.5 Mvar, 345-kV shunt reactor on the substation high-side bus can reduce the Mvar flow into the POI to approximately zero in all three Peak cases.
- A short-circuit study has been performed on the power flow models for the 2025 Summer Peak Season for each generator using the Cluster Scenario model. A 3-phase fault is applied on buses up to 5 levels away from the POI of each interconnection request project and the results of the study have been presented.

APPENDIX A

SPP'S FAULT DEFINITIONS FOR GROUP 3

Table 10: Fault Definitions (Group 3) Specified by SPP

Cont. No.	Cont. Name	Description	GEN-2015-021	GEN-2015-026	GEN-2015-027	ASGI-2015-001
1	FLT01-3PH	3 phase fault on the Thistle 345KV (539801) to Woodward 345KV (515375) CKT 1, near Thistle. a. Apply fault at the Thistle 345KV bus. b. Clear fault after 5 cycles by tripping the faulted line. c. Wait 20 cycles, and then re-close the line in (b) back into the fault. d. Leave fault on for 5 cycles, then trip the line in (b) and remove fault.				X
2	FLT02-3PH	3 phase fault on the Thistle 345KV (539801) to Woodward 345KV (515375) CKT 1 and 2, near Thistle. a. Apply fault at the Thistle 345KV bus. b. Clear fault after 5 cycles by tripping the faulted lines (CKT 1 and 2). c. Wait 20 cycles, and then re-close the lines in (b) back into the fault. d. Leave fault on for 5 cycles, then trip the lines in (b) and remove fault.		X		X
3	FLT03-3PH	3 phase fault on the Thistle 345KV (539801) to GEN-2015-024 &GEN-2015-025 Tap 345KV (560033) CKT 1, near Thistle. a. Apply fault at the Thistle 345KV bus. b. Clear fault after 5 cycles by tripping the faulted line. c. Wait 20 cycles, and then re-close the line in (b) back into the fault. d. Leave fault on for 5 cycles, then trip the line in (b) and remove fault.				X
4	FLT04-3PH	3 phase fault on the Thistle 345KV (539801) to GEN-2015-024 &GEN-2015-025 Tap 345KV (560033) CKT 1 and 2, near Thistle. a. Apply fault at the Thistle 345KV bus. b. Clear fault after 5 cycles by tripping the faulted lines (CKT 1 and 2). c. Wait 20 cycles, and then re-close the lines in (b) back into the fault. d. Leave fault on for 5 cycles, then trip the lines in (b) and remove fault.				X
5	FLT05-3PH	3 phase fault on the Thistle 345KV (539801) to Clark County 345KV (539800) CKT 1, near Thistle. a. Apply fault at the Thistle 345KV bus. b. Clear fault after 5 cycles by tripping the faulted line. c. Wait 20 cycles, and then re-close the line in (b) back into the fault. d. Leave fault on for 5 cycles, then trip the line in (b) and remove fault.		X		X
6	FLT06-3PH	3 phase fault on the Thistle 345KV (539801) to Clark County 345KV (539800) CKT 1 and 2, near Thistle. a. Apply fault at the Thistle 345KV bus. b. Clear fault after 5 cycles by tripping the faulted lines (CKT 1 and 2). c. Wait 20 cycles, and then re-close the line in (b) back into the fault. d. Leave fault on for 5 cycles, then trip the line in (b) and remove fault.		X		X
7	FLT07-3PH	3 phase fault on the Thistle 345KV (539801) to Thistle 138kV (539804) to Thistle 13.8kV (539802) XMFR CKT 1, near Thistle 345kV. a. Apply fault at the Thistle 345kV bus. b. Clear fault after 5 cycles by tripping the faulted transformer.		X		X

Cont. No.	Cont. Name	Description	GEN-2015-021	GEN-2015-026	GEN-2015-027	ASGI-2015-001
8	FLT08-3PH	3 phase fault on the G13-010 Tap 345KV (562334) to G11-017 Tap 345KV (560242) CKT 1 near G13-010 Tap. a. Apply fault at the G13-010 Tap 345KV bus. b. Clear fault after 5 cycles by tripping the faulted line. c. Wait 20 cycles, and then re-close the line in (b) back into the fault. d. Leave fault on for 5 cycles, then trip the line in (b) and remove fault.		X		
9	FLT09-3PH	3 phase fault on the Post Rock 345KV (530583) to Post Rock 230kV (530584) to Post Rock 13.8kV (530673) XMFR CKT 1, near Post Rock 345kV. a. Apply fault at the Post Rock 345kV bus. b. Clear fault after 5 cycles by tripping the faulted transformer.		X		
10	FLT10-3PH	3 phase fault on the Knoll 230KV (530558) to Knoll 115kV (530561) to Knoll 11.49kV (530629) XMFR CKT 1, near Knoll 230kV. a. Apply fault at the Knoll 230kV bus. b. Clear fault after 5 cycles by tripping the faulted transformer.		X		X
11	FLT11-3PH	3 phase fault on the G11-017 Tap 345KV (560242) to Spearville 345KV (531469) CKT 1 near G11-017 Tap. a. Apply fault at the G11-017 Tap 345KV bus. b. Clear fault after 5 cycles by tripping the faulted line. c. Wait 20 cycles, and then re-close the line in (b) back into the fault. d. Leave fault on for 5 cycles, then trip the line in (b) and remove fault.		X		
12	FLT12-3PH	3 phase fault on the Spearville 345KV (531469) to Buckner 345KV (531501) CKT 1 near Spearville. a. Apply fault at the Spearville 345KV bus. b. Clear fault after 5 cycles by tripping the faulted line. c. Wait 20 cycles, and then re-close the line in (b) back into the fault. d. Leave fault on for 5 cycles, then trip the line in (b) and remove fault.		X		X
13	FLT13-3PH	3 phase fault on the Spearville 345KV (531469) to Clark County 345KV (539800) CKT 1 near Spearville. a. Apply fault at the Spearville 345KV bus. b. Clear fault after 5 cycles by tripping the faulted line. c. Wait 20 cycles, and then re-close the line in (b) back into the fault. d. Leave fault on for 5 cycles, then trip the line in (b) and remove fault.		X		
14	FLT14-3PH	3 phase fault on the Spearville 345KV (531469) to Ironwood 345KV (539803) CKT 1 near Spearville. a. Apply fault at the Spearville 345KV bus. b. Clear fault after 5 cycles by tripping the faulted line. c. Wait 20 cycles, and then re-close the line in (b) back into the fault. d. Leave fault on for 5 cycles, then trip the line in (b) and remove fault.		X		
15	FLT15-3PH	3 phase fault on the Spearville 345KV (531469) to Spearville 230kV (539695) to Spearville 13.8kV (531468) XMFR CKT 1, near Spearville 345kV. a. Apply fault at the Spearville 345kV bus. b. Clear fault after 5 cycles by tripping the faulted transformer.		X	X	

Cont. No.	Cont. Name	Description	GEN-2015-021	GEN-2015-026	GEN-2015-027	ASGI-2015-001
16	FLT16-3PH	3 phase fault on the Spearville 345KV (531469) to Spearville 115kv (539759) to Spearville 13.8kV (539960) XMFR CKT 1, near Spearville 345kV. a. Apply fault at the Spearville 345kV bus. b. Clear fault after 5 cycles by tripping the faulted transformer.		X	X	
17	FLT17-3PH	3 phase fault on the Buckner 345KV (531501) to Holcomb 345KV (531449) CKT 1 near Buckner. a. Apply fault at the Buckner 345KV bus. b. Clear fault after 5 cycles by tripping the faulted line. c. Wait 20 cycles, and then re-close the line in (b) back into the fault. d. Leave fault on for 5 cycles, then trip the line in (b) and remove fault.		X		
18	FLT18-3PH	3 phase fault on the Clark County 345KV (539800) to Ironwood 345KV (539803) CKT 1 near Clark County. a. Apply fault at the Clark County 345KV bus. b. Clear fault after 5 cycles by tripping the faulted line. c. Wait 20 cycles, and then re-close the line in (b) back into the fault. d. Leave fault on for 5 cycles, then trip the line in (b) and remove fault.		X		
19	FLT19-3PH	3 phase fault on Clark County 345KV (539800) to Ironwood 345KV (539803) CKT 1 near Clark County. a. Apply fault at the Clark County 345KV bus. b. Clear fault after 5 cycles by tripping the faulted lines— 1. the Clark County 345KV (539800) to Ironwood 345KV (539803) CKT 1 2. the Spearville 345KV (531469) to Clark County 345KV (539800) CKT 1		X		
20	FLT20-3PH	3 phase fault on the Holcomb 345KV (531449) to Finney 345KV (523853) CKT 1 near Holcomb. a. Apply fault at the Holcomb 345KV bus. b. Clear fault after 5 cycles by tripping the faulted line. c. Wait 20 cycles, and then re-close the line in (b) back into the fault. d. Leave fault on for 5 cycles, then trip the line in (b) and remove fault.		X		
21	FLT21-3PH	3 phase fault on the Finney 345KV (523853) to Hitchland 345KV (523097) CKT 1 near Finney. a. Apply fault at the Finney 345KV bus. b. Clear fault after 5 cycles by tripping the faulted line. c. Wait 20 cycles, and then re-close the line in (b) back into the fault. d. Leave fault on for 5 cycles, then trip the line in (b) and remove fault.		X		
22	FLT22-3PH	3 phase fault on the Finney 345KV (523853) to Lamar 345KV (599950) CKT 1 near Finney. a. Apply fault at the Finney 345KV bus. b. Clear fault after 5 cycles by tripping the faulted line. c. Block DC tie at 599950 (SPP_43_Lamar). From LAMAR 345 kV(599950) to LAMAR 230kV (599951)		X		

Cont. No.	Cont. Name	Description	GEN-2015-021	GEN-2015-026	GEN-2015-027	ASGI-2015-001
23	FLT23-3PH	3 phase fault on the Setab 345KV (531465) to Mingo 345KV (531451) CKT 1 near Setab. a. Apply fault at the Setab 345KV bus. b. Clear fault after 5 cycles by tripping the faulted line. c. Wait 20 cycles, and then re-close the line in (b) back into the fault. d. Leave fault on for 5 cycles, then trip the line in (b) and remove fault.		X		
24	FLT24-3PH	3 phase fault on the Mingo 345KV (531451) to Red Willow 345KV (640325) CKT 1 near Mingo. a. Apply fault at the Mingo 345KV bus. b. Clear fault after 5 cycles by tripping the faulted line. c. Wait 20 cycles, and then re-close the line in (b) back into the fault. d. Leave fault on for 5 cycles, then trip the line in (b) and remove fault.		X		
25	FLT25-3PH	3 phase fault on the Hitchland 345KV (523097) to G14-037 Tap 345KV (560010) CKT 1 near Hitchland. a. Apply fault at the Hitchland 345KV bus. b. Clear fault after 5 cycles by tripping the faulted line. c. Wait 20 cycles, and then re-close the line in (b) back into the fault. d. Leave fault on for 5 cycles, then trip the line in (b) and remove fault.		X		
26	FLT26-3PH	3 phase fault on the Hitchland 345KV (523097) to G14-037 Tap 345KV (560010) CKT 1 and 2, near Hitchland. a. Apply fault at the Hitchland 345KV bus. b. Clear fault after 5 cycles by tripping the faulted lines (CKT 1 and 2). c. Wait 20 cycles, and then re-close the lines in (b) back into the fault. d. Leave fault on for 5 cycles, then trip the lines in (b) and remove fault.		X		
27	FLT27-3PH	3 phase fault on the Hitchland 345KV (523097) to G14-038 Tap 345KV (560011) CKT 1 near Hitchland. a. Apply fault at the Hitchland 345KV bus. b. Clear fault after 5 cycles by tripping the faulted line. c. Wait 20 cycles, and then re-close the line in (b) back into the fault. d. Leave fault on for 5 cycles, then trip the line in (b) and remove fault.		X		
28	FLT28-3PH	3 phase fault on the Hitchland 345KV (523097) to Hitchland 230kv (523095) to Hitchland 13.8kV (523091) XMFR CKT 1, near Hitchland 345kV. a. Apply fault at the Hitchland 345kV bus. b. Clear fault after 5 cycles by tripping the faulted transformer.		X		
29	FLT29-3PH	3 phase fault on the Mingo 345KV (531451) to Mingo 115kv (531429) to Mingo 13.8kV (531452) XMFR CKT 1, near Mingo 345kV. a. Apply fault at the Mingo 345kV bus. b. Clear fault after 5 cycles by tripping the faulted transformer.		X		
30	FLT30-3PH	3 phase fault on the Holcomb 345KV (539449) to Setab 345KV (531465) CKT 1 near Holcomb. a. Apply fault at the Holcomb 345KV bus. b. Clear fault after 5 cycles by tripping the faulted line. c. Wait 20 cycles, and then re-close the line in (b) back into the fault. d. Leave fault on for 5 cycles, then trip the line in (b) and remove fault.		X		

Cont. No.	Cont. Name	Description	GEN-2015-021	GEN-2015-026	GEN-2015-027	ASGI-2015-001
31	FLT31-3PH	3 phase fault on the Holcomb 345KV (531449) to Holcomb 115kv (531448) to Holcomb 13.8kV (531450) XMFR CKT 1, near Holcomb 345kV. a. Apply fault at the Holcomb 345kV bus. b. Clear fault after 5 cycles by tripping the faulted transformer.		X		
32	FLT32-3PH	3 phase fault on the Setab 345KV (531465) to Setab 115kv (531464) to Setab 13.8kV (531259) XMFR CKT 1, near Setab 345kV. a. Apply fault at the Setab 345kV bus. b. Clear fault after 5 cycles by tripping the faulted transformer.		X		
33	FLT33-PO	**Prior outage on the Thistle – Clark County 345kV CKT 1** 3 phase fault on Thistle (539801) to Woodward (515375)) 345kV CKT 1 a. Prior outage Thistle (539801) to Clark County (539800)) 345kV CKT 1 (solve network for steady state solution) b. 3 phase fault on the Thistle (539801) to Woodward (515375) 345kV CKT 1 line near Thistle c. Clear fault after 5 cycles and trip the faulted line. d. Wait 20 cycles, and then re-close the line in (b) back into the fault. e. Leave fault on for 5 cycles, then trip the line in (b) and remove fault.		X		
34	FLT34- PO	**Prior outage on the the GEN-2015-024 & GEN-2015-025 Tap – Wichita 345kV CKT 1 line** 3 phase fault on Thistle (539801) to Clark County (539800) 345kV CKT 1 a. Prior outage GEN-2015-024 & GEN-2015-025 Tap (560033) to Wichita (532796) CKT 1 345kV line (solve network for steady state solution) b. 3 phase fault on the Thistle (539801) to Clark County (539800) 345kV CKT 1 line near Thistle c. Clear fault after 5 cycles and trip the faulted line. d. Wait 20 cycles, and then re-close the line in (b) back into the fault. e. Leave fault on for 5 cycles, then trip the line in (b) and remove fault.		X		
35	FLT35-PO	**Prior outage on the Spearville – Buckner 345kV line** 3 phase fault on GEN 2013-010-TAP (562334) to Post Rock (530583) a. Prior outage the Spearville (531469) to Buckner (531501) 345kV line (solve network for steady state solution) b. 3 phase fault on the GEN 2013-010-TAP (562334) to Post Rock (530583) 345kV line near GEN 2013-010-TAP c. Clear fault after 5 cycles and trip the faulted line. d. Wait 20 cycles, and then re-close the line in (b) back into the fault. e. Leave fault on for 5 cycles, then trip the line in (b) and remove fault.		X		
36	FLT36-SB	**Thistle 345kV Stuck Breaker** a. Apply single phase fault at the Thistle (539801) 345kV bus b. Wait 16 cycles, and then drop Thistle (539801) – Woodward (515375) 345kV circuit 1 and remove fault		X		

Cont. No.	Cont. Name	Description	GEN-2015-021	GEN-2015-026	GEN-2015-027	ASCI-2015-001
37	FLT37-SB	**Thistle 345kV Stuck Breaker** a. Apply single phase fault at the Thistle (539801) 345kV bus b. Wait 16 cycles, and then drop Thistle (539801) – GEN-2015-024 & GEN-2015-025 Tap (560033) 345kV circuit 1 and remove fault		X		
38	FLT38-SB	**Thistle 345kV Stuck Breaker** a. Apply single phase fault at the Thistle (539801) 345kV bus b. Wait 16 cycles, and then drop Thistle (539801) – Clark County (539800) 345kV circuit 1 and remove fault		X		
39	FLT39-SB	**Thistle 345kV Stuck Breaker** a. Apply single phase fault at the Thistle (539801) 345kV bus b. Wait 16 cycles, and then drop Thistle (539801) 345kV – Thistle (539804) 138kV transformer circuit 1 and Thistle 13.8 kV (539802) and remove fault		X		
40	FLT40-PO	**Prior outage on the Spearville – Clark County 345kV line** 3 phase fault on Spearville (531469) to Buckner (531501) 345kV a. Prior outage the Spearville (531469) to Clark County (539800) 345kV line (solve network for steady state solution) b. 3 phase fault on the Spearville (531469) to Buckner (531501) 345kV line near Spearville c. Clear fault after 5 cycles and trip the faulted line. d. Wait 20 cycles, and then re-close the line in (b) back into the fault. e. Leave fault on for 5 cycles, then trip the line in (b) and remove fault.		X		
41	FLT41-3PH	3 phase fault on the Ninnescah (539648) to RVRoad (539651) 115kV line ckt 1, near Ninnescah. a. Apply fault at the Ninnescah 115kV bus. b. Clear fault after 5 cycles by tripping the faulted line. c. Wait 20 cycles, and then re-close the line in (b) back into the fault. d. Leave fault on for 5 cycles, then trip the line in (b) and remove fault.				X
42	FLT42-3PH	3 phase fault on the Ninnescah (539648) to St. John (539696) 115kV line ckt 1, near Ninnescah. a. Apply fault at the Ninnescah 115kV bus. b. Clear fault after 5 cycles by tripping the faulted line. c. Wait 20 cycles, and then re-close the line in (b) back into the fault. d. Leave fault on for 5 cycles, then trip the line in (b) and remove fault.				X
43	FLT43-3PH	3 phase fault on the Seward (539692) to SEWRDMW (530679) 115kV line ckt 1, near Seward. a. Apply fault at the Seward 115kV bus. b. Clear fault after 5 cycles by tripping the faulted line. c. Wait 20 cycles, and then re-close the line in (b) back into the fault. d. Leave fault on for 5 cycles, then trip the line in (b) and remove fault.				X

Cont. No.	Cont. Name	Description	GEN-2015-021	GEN-2015-026	GEN-2015-027	ASGI-2015-001
44	FLT44-3PH	3 phase fault on the Seward (539692) to Great Bend Tap (539666) 115kV line ckt 1, near Seward. a. Apply fault at the Seward 115kV bus. b. Clear fault after 5 cycles by tripping the faulted line. c. Wait 20 cycles, and then re-close the line in (b) back into the fault. d. Leave fault on for 5 cycles, then trip the line in (b) and remove fault.				X
45	FLT45-3PH	3 phase fault on the St. John (530624) to Huntsville (530618) 115kV line ckt 1, near St. John. a. Apply fault at the St. John 115kV bus. b. Clear fault after 5 cycles by tripping the faulted line. c. Wait 20 cycles, and then re-close the line in (b) back into the fault. d. Leave fault on for 5 cycles, then trip the line in (b) and remove fault.				X
46	FLT46-3PH	3 phase fault on the Barber (539760) to Medicine Lodge (539673) 115kV line ckt 1, near Barber. a. Apply fault at the Barber 115kV bus. b. Clear fault after 5 cycles by tripping the faulted line. c. Wait 20 cycles, and then re-close the line in (b) back into the fault. d. Leave fault on for 5 cycles, then trip the line in (b) and remove fault.				X
47	FLT47-3PH	3 phase fault on the Barber (539760) 115kV to Barber (539674) 138kV/(539917) 2.72kV transformer at the 115kV bus. a. Apply fault at the Barber 115kV bus. b. Clear fault after 5 cycles by tripping the transformer				X
48	FLT48-3PH	3 phase fault on the Flatridge (539638) to Harper (539668) 138kV line ckt 1, near Flatridge. a. Apply fault at the Flatridge 138kV bus. b. Clear fault after 5 cycles by tripping the faulted line. c. Wait 20 cycles, and then re-close the line in (b) back into the fault. d. Leave fault on for 5 cycles, then trip the line in (b) and remove fault.				X
49	FLT49-3PH	3 phase fault on the Flatridge (539638) to Harper (539668) 138kV line ckt 1, near Flatridge. a. Apply fault at the Flatridge 138kV bus. b. Clear fault after 5 cycles by tripping the faulted line. c. Wait 20 cycles, and then re-close the line in (b) back into the fault. d. Leave fault on for 5 cycles, then trip the line in (b) and remove fault.				X
50	FLT50-3PH	3 phase fault on the Flatridge (539638) to Thistle (539804) 138kV line ckt 1, near Flatridge. a. Apply fault at the Flatridge 138kV bus. b. Clear fault after 5 cycles by tripping the faulted line. c. Wait 20 cycles, and then re-close the line in (b) back into the fault. d. Leave fault on for 5 cycles, then trip the line in (b) and remove fault.				X
51	FLT51-3PH	3 phase fault on the HEC (533419) to Huntsville (530618) 115kV line ckt 1, near HEC. a. Apply fault at the HEC 115kV bus. b. Clear fault after 5 cycles by tripping the faulted line. c. Wait 20 cycles, and then re-close the line in (b) back into the fault. d. Leave fault on for 5 cycles, then trip the line in (b) and remove fault.				X

Cont. No.	Cont. Name	Description	GEN-2015-021	GEN-2015-026	GEN-2015-027	ASGI-2015-001
52	FLT52-3PH	3 phase fault on the HEC (533419) to Circle (533413) 115kV line ckt 1, near HEC. a. Apply fault at the HEC 115kV bus. b. Clear fault after 5 cycles by tripping the faulted line. c. Wait 20 cycles, and then re-close the line in (b) back into the fault. d. Leave fault on for 5 cycles, then trip the line in (b) and remove fault.				X
53	FLT53-3PH	3 phase fault on the HEC (533419) to 43Loran (533440) 115kV line ckt 1, near HEC. a. Apply fault at the HEC 115kV bus. b. Clear fault after 5 cycles by tripping the faulted line. c. Wait 20 cycles, and then re-close the line in (b) back into the fault. d. Leave fault on for 5 cycles, then trip the line in (b) and remove fault.				X
54	FLT54-3PH	3 phase fault on the Circle (533413) 115kV to Circle (532871) 230kV/(532892) 13.8kV transformer at the 115kV bus. a. Apply fault at the Circle 115kV bus. b. Clear fault after 5 cycles by tripping the transformer				X
55	FLT55-3PH	3 phase fault on the Great Bend (539678) 115kV to Great Bend (539679) 138kV/(539920) 13.8kV transformer at the 115kV bus. a. Apply fault at the Great Bend 115kV bus. b. Clear fault after 5 cycles by tripping the transformer				X
56	FLT56-3PH	3 phase fault on the Johnson Corner (531424) to Johnson (531381) 115kV line ckt 1, near Johnson Corner. a. Apply fault at the Johnson Corner 115kV bus. b. Clear fault after 5 cycles by tripping the faulted line. c. Wait 20 cycles, and then re-close the line in (b) back into the fault. d. Leave fault on for 5 cycles, then trip the line in (b) and remove fault.	X			
57	FLT57-3PH	3 phase fault on the Johnson Corner (531424) to Bear Creek (531473) 115kV line ckt 1, near Johnson Corner. a. Apply fault at the Johnson Corner 115kV bus. b. Clear fault after 5 cycles by tripping the faulted line. c. Wait 20 cycles, and then re-close the line in (b) back into the fault. d. Leave fault on for 5 cycles, then trip the line in (b) and remove fault.	X			
58	FLT58-3PH	3 phase fault on the Syracuse (531437) to Bear Creek (531473) 115kV line ckt 1, near Syracuse. a. Apply fault at the Syracuse 115kV bus. b. Clear fault after 5 cycles by tripping the faulted line. c. Wait 20 cycles, and then re-close the line in (b) back into the fault. d. Leave fault on for 5 cycles, then trip the line in (b) and remove fault.	X			
59	FLT59-3PH	3 phase fault on the Syracuse (531437) to Tribune (531439) 115kV line ckt 1, near Syracuse. a. Apply fault at the Syracuse 115kV bus. b. Clear fault after 5 cycles by tripping the faulted line. c. Wait 20 cycles, and then re-close the line in (b) back into the fault. d. Leave fault on for 5 cycles, then trip the line in (b) and remove fault.	X			

Cont. No.	Cont. Name	Description	GEN-2015-021	GEN-2015-026	GEN-2015-027	ASGI-2015-001
60	FLT60-3PH	3 phase fault on the Syracuse (531437) to Williamson (531440) 115kV line ckt 1, near Syracuse. a. Apply fault at the Syracuse 115kV bus. b. Clear fault after 5 cycles by tripping the faulted line. c. Wait 20 cycles, and then re-close the line in (b) back into the fault. d. Leave fault on for 5 cycles, then trip the line in (b) and remove fault.	X			
61	FLT61-3PH	3 phase fault on the Tribune Switch (531438) to Palmer (531431) 115kV line ckt 1, near Tribune Switch. a. Apply fault at the Tribune Switch 115kV bus. b. Clear fault after 5 cycles by tripping the faulted line. c. Wait 20 cycles, and then re-close the line in (b) back into the fault. d. Leave fault on for 5 cycles, then trip the line in (b) and remove fault.	X			
62	FLT62-3PH	3 phase fault on the Tribune Switch (531438) to Selkirk (531434) 115kV line ckt 1, near Tribune Switch. a. Apply fault at the Tribune Switch 115kV bus. b. Clear fault after 5 cycles by tripping the faulted line. c. Wait 20 cycles, and then re-close the line in (b) back into the fault. d. Leave fault on for 5 cycles, then trip the line in (b) and remove fault.	X			
63	FLT63-3PH	3 phase fault on the Tribune Switch (531438) to Tribune (531439) 115kV line ckt 1, near Tribune Switch. a. Apply fault at the Tribune Switch 115kV bus. b. Clear fault after 5 cycles by tripping the faulted line. c. Wait 20 cycles, and then re-close the line in (b) back into the fault. d. Leave fault on for 5 cycles, then trip the line in (b) and remove fault.	X			
64	FLT64-3PH	3 phase fault on the Fletcher (531420) to PK_GOAB (531400) 115kV line ckt 1, near Fletcher. a. Apply fault at the Fletcher 115kV bus. b. Clear fault after 5 cycles by tripping the faulted line. c. Wait 20 cycles, and then re-close the line in (b) back into the fault. d. Leave fault on for 5 cycles, then trip the line in (b) and remove fault.	X			
65	FLT65-3PH	3 phase fault on the Fletcher (531420) to Williamson (531440) 115kV line ckt 1, near Fletcher. a. Apply fault at the Fletcher 115kV bus. b. Clear fault after 5 cycles by tripping the faulted line. c. Wait 20 cycles, and then re-close the line in (b) back into the fault. d. Leave fault on for 5 cycles, then trip the line in (b) and remove fault.	X			
66	FLT66-3PH	3 phase fault on the Fletcher (531420) to Holcomb (531448) 115kV line ckt 1, near Fletcher. a. Apply fault at the Fletcher 115kV bus. b. Clear fault after 5 cycles by tripping the faulted line. c. Wait 20 cycles, and then re-close the line in (b) back into the fault. d. Leave fault on for 5 cycles, then trip the line in (b) and remove fault.	X			

Cont. No.	Cont. Name	Description	GEN-2015-021	GEN-2015-026	GEN-2015-027	ASGI-2015-001
67	FLT67-3PH	3 phase fault on the Pioneer (531391) to Hickock (531378) 115kV line ckt 1, near Pioneer. a. Apply fault at the Pioneer 115kV bus. b. Clear fault after 5 cycles by tripping the faulted line. c. Wait 20 cycles, and then re-close the line in (b) back into the fault. d. Leave fault on for 5 cycles, then trip the line in (b) and remove fault.	X			
68	FLT68-3PH	3 phase fault on the Pioneer (531391) to PK_GOAB (531400) 115kV line ckt 1, near Pioneer. a. Apply fault at the Pioneer 115kV bus. b. Clear fault after 5 cycles by tripping the faulted line. c. Wait 20 cycles, and then re-close the line in (b) back into the fault. d. Leave fault on for 5 cycles, then trip the line in (b) and remove fault.	X			
69	FLT69-3PH	3 phase fault on the Pioneer (531391) to Grant Tap (531483) 115kV line ckt 1, near Pioneer. a. Apply fault at the Pioneer 115kV bus. b. Clear fault after 5 cycles by tripping the faulted line. c. Wait 20 cycles, and then re-close the line in (b) back into the fault. d. Leave fault on for 5 cycles, then trip the line in (b) and remove fault.	X			
70	FLT70-3PH	3 phase fault on the Pioneer (531391) to Ulysses Plant (531490) 115kV line ckt 1, near Pioneer. a. Apply fault at the Pioneer 115kV bus. b. Clear fault after 5 cycles by tripping the faulted line. c. Wait 20 cycles, and then re-close the line in (b) back into the fault. d. Leave fault on for 5 cycles, then trip the line in (b) and remove fault.	X			
71	FLT71-3PH	3 phase fault on the Pioneer Tap (531392) to CMX Tap (531203) 115kV line ckt 1, near Pioneer Tap. a. Apply fault at the Pioneer Tap 115kV bus. b. Clear fault after 5 cycles by tripping the faulted line. c. Wait 20 cycles, and then re-close the line in (b) back into the fault. d. Leave fault on for 5 cycles, then trip the line in (b) and remove fault.	X			
72	FLT72-3PH	3 phase fault on the Pioneer Tap (531392) to Plymel (531393) 115kV line ckt 1, near Pioneer Tap. a. Apply fault at the Pioneer Tap 115kV bus. b. Clear fault after 5 cycles by tripping the faulted line. c. Wait 20 cycles, and then re-close the line in (b) back into the fault. d. Leave fault on for 5 cycles, then trip the line in (b) and remove fault.	X			
73	FLT73-3PH	3 phase fault on the Pioneer Tap (531392) to Sublette (531398) 115kV line ckt 1, near Pioneer Tap. a. Apply fault at the Pioneer Tap 115kV bus. b. Clear fault after 5 cycles by tripping the faulted line. c. Wait 20 cycles, and then re-close the line in (b) back into the fault. d. Leave fault on for 5 cycles, then trip the line in (b) and remove fault.	X			

Cont. No.	Cont. Name	Description	GEN-2015-021	GEN-2015-026	GEN-2015-027	ASGI-2015-001
74	FLT74-3PH	3 phase fault on the Pioneer Tap (531392) to Satanta Tap (531442) 115kV line ckt 1, near Pioneer Tap. a. Apply fault at the Pioneer Tap 115kV bus. b. Clear fault after 5 cycles by tripping the faulted line. c. Wait 20 cycles, and then re-close the line in (b) back into the fault. d. Leave fault on for 5 cycles, then trip the line in (b) and remove fault.	X			
75	FLT75-3PH	3 phase fault on the Crooked Creek (539783) to Cudahy (539659) 115kV line ckt 1, near Crooked Creek. a. Apply fault at the Crooked Creek 115kV bus. b. Clear fault after 5 cycles by tripping the faulted line. c. Wait 20 cycles, and then re-close the line in (b) back into the fault. d. Leave fault on for 5 cycles, then trip the line in (b) and remove fault.			X	
76	FLT76-3PH	3 phase fault on the Crooked Creek (539783) to Ft. Dodge (539671) 115kV line ckt 1, near Crooked Creek. a. Apply fault at the Crooked Creek 115kV bus. b. Clear fault after 5 cycles by tripping the faulted line. c. Wait 20 cycles, and then re-close the line in (b) back into the fault. d. Leave fault on for 5 cycles, then trip the line in (b) and remove fault.			X	
77	FLT77-3PH	3 phase fault on the Cimarron River Tap (539652) to Kismet (539646) 115kV line ckt 1, near Cimarron River Tap. a. Apply fault at the Cimarron River Tap 115kV bus. b. Clear fault after 5 cycles by tripping the faulted line. c. Wait 20 cycles, and then re-close the line in (b) back into the fault. d. Leave fault on for 5 cycles, then trip the line in (b) and remove fault.			X	
78	FLT78-3PH	3 phase fault on the Cimarron River Tap (539652) to Cimarron Plant (539654) 115kV line ckt 1, near Cimarron River Tap. a. Apply fault at the Cimarron River Tap 115kV bus. b. Clear fault after 5 cycles by tripping the faulted line. c. Wait 20 cycles, and then re-close the line in (b) back into the fault. d. Leave fault on for 5 cycles, then trip the line in (b) and remove fault.			X	
79	FLT79-3PH	3 phase fault on the Cimarron River Tap (539652) to East Liberal (539672) 115kV line ckt 1, near Cimarron River Tap. a. Apply fault at the Cimarron River Tap 115kV bus. b. Clear fault after 5 cycles by tripping the faulted line. c. Wait 20 cycles, and then re-close the line in (b) back into the fault. d. Leave fault on for 5 cycles, then trip the line in (b) and remove fault.			X	
80	FLT80-3PH	3 phase fault on the Cimarron River Plant (539654) to Walkmeyer (531405) 115kV line ckt 1, near Cimarron River Plant. a. Apply fault at the Cimarron River Plant 115kV bus. b. Clear fault after 5 cycles by tripping the faulted line. c. Wait 20 cycles, and then re-close the line in (b) back into the fault. d. Leave fault on for 5 cycles, then trip the line in (b) and remove fault.			X	

Cont. No.	Cont. Name	Description	GEN-2015-021	GEN-2015-026	GEN-2015-027	ASGI-2015-001
81	FLT81-3PH	3 phase fault on the Cimarron River Plant (539654) to Hayne (539640) 115kV line ckt 1, near Cimarron River Plant. a. Apply fault at the Cimarron River Plant 115kV bus. b. Clear fault after 5 cycles by tripping the faulted line. c. Wait 20 cycles, and then re-close the line in (b) back into the fault. d. Leave fault on for 5 cycles, then trip the line in (b) and remove fault.			X	
82	FLT82-3PH	3 phase fault on the Seward (531467) to North Cimarron (539749) 115kV line ckt 1, near Seward. a. Apply fault at the Seward 115kV bus. b. Clear fault after 5 cycles by tripping the faulted line. c. Wait 20 cycles, and then re-close the line in (b) back into the fault. d. Leave fault on for 5 cycles, then trip the line in (b) and remove fault.			X	
83	FLT83-3PH	3 phase fault on the Ft. Dodge (539671) to DC Beef (539645) 115kV line ckt 1, near Ft. Dodge. a. Apply fault at the Ft. Dodge 115kV bus. b. Clear fault after 5 cycles by tripping the faulted line. c. Wait 20 cycles, and then re-close the line in (b) back into the fault. d. Leave fault on for 5 cycles, then trip the line in (b) and remove fault.			X	
84	FLT84-3PH	3 phase fault on the North Ft. Dodge (539771) to Ft. Dodge (539671) 115kV line ckt 2, near North Ft. Dodge. a. Apply fault at the North Ft. Dodge 115kV bus. b. Clear fault after 5 cycles by tripping the faulted line. c. Wait 20 cycles, and then re-close the line in (b) back into the fault. d. Leave fault on for 5 cycles, then trip the line in (b) and remove fault.			X	
85	FLT85-3PH	3 phase fault on the North Ft. Dodge (539771) to South Dodge (539688) 115kV line ckt 1, near North Ft. Dodge. a. Apply fault at the North Ft. Dodge 115kV bus. b. Clear fault after 5 cycles by tripping the faulted line. c. Wait 20 cycles, and then re-close the line in (b) back into the fault. d. Leave fault on for 5 cycles, then trip the line in (b) and remove fault.			X	
86	FLT86-3PH	3 phase fault on the North Ft. Dodge (539771) to Spearville (539694) 115kV line ckt 1, near North Ft. Dodge. a. Apply fault at the North Ft. Dodge 115kV bus. b. Clear fault after 5 cycles by tripping the faulted line. c. Wait 20 cycles, and then re-close the line in (b) back into the fault. d. Leave fault on for 5 cycles, then trip the line in (b) and remove fault.			X	
87	FLT87-3PH	3 phase fault on the North Ft. Dodge (539771) to Ford (539758) 115kV line ckt 1, near North Ft. Dodge. a. Apply fault at the North Ft. Dodge 115kV bus. b. Clear fault after 5 cycles by tripping the faulted line. c. Wait 20 cycles, and then re-close the line in (b) back into the fault. d. Leave fault on for 5 cycles, then trip the line in (b) and remove fault.			X	

Cont. No.	Cont. Name	Description	GEN-2015-021	GEN-2015-026	GEN-2015-027	ASGI-2015-001
88	FLT88-3PH	3 phase fault on the North Ft. Dodge (539771) to Spearville (539759) 115kV line ckt 1, near North Ft. Dodge. a. Apply fault at the North Ft. Dodge 115kV bus. b. Clear fault after 5 cycles by tripping the faulted line. c. Wait 20 cycles, and then re-close the line in (b) back into the fault. d. Leave fault on for 5 cycles, then trip the line in (b) and remove fault.			X	
89	FLT89-3PH	3 phase fault on the Wichita 345KV (532796) to GEN-2015-024 & GEN-2015-025 Tap 345KV (560033) CKT 1, near GEN-2015-024 & GEN-2015-025 Tap. a. Apply fault at the GEN-2015-024 & GEN-2015-025 Tap 345KV bus. b. Clear fault after 5 cycles by tripping the faulted line. c. Wait 20 cycles, and then re-close the line in (b) back into the fault. d. Leave fault on for 5 cycles, then trip the line in (b) and remove fault.				X
90	FLT90-3PH	3 phase fault on the Wichita 345KV (532796) to GEN-2015-024 & GEN-2015-025 Tap 345KV (560033) CKT 1 and 2, near GEN-2015-024 & GEN-2015-025 Tap. a. Apply fault at the GEN-2015-024 & GEN-2015-025 Tap 345KV bus. b. Clear fault after 5 cycles by tripping the faulted lines (CKT 1 and 2). c. Wait 20 cycles, and then re-close the lines in (b) back into the fault. d. Leave fault on for 5 cycles, then trip the lines in (b) and remove fault.				X

APPENDIX B

SOUTHWEST POWER POOL DISTURBANCE PERFORMANCE REQUIREMENTS

OVERVIEW

These Disturbance Performance Requirements ("Requirements") shall be applicable to the Bulk Electric System within the Southwest Power Pool Planning Area. Utilization of these Requirements applies to all registered entities within the Southwest Power Pool Planning Area. These Requirements shall not be applicable to facilities that are not part of Bulk Electric System. More stringent Requirements are at the sole discretion of each Transmission Owner.

Transient and dynamic stability assessments are generally performed to assure adequate avoidance of loss of generator synchronism and prevention of system voltage collapse within the first 20 seconds after a system disturbance. These Requirements provide a basis for evaluating the system response during the initial transient period following a disturbance on the Bulk Electric System by establishing minimum requirements for machine rotor angle damping and transient voltage recovery.

ROTOR ANGLE DAMPING REQUIREMENT

Machine Rotor Angles shall exhibit well damped angular oscillations [as defined below] and acceptable power swings following a disturbance on the Bulk Electric System for all NERC Category A, B and C events.

Well damped angular oscillations shall meet one of the following two requirements when calculated directly from the rotor angle:

1. Successive Positive Peak Ratio (SPPR) must be less than or equal to 0.95 where SPPR is calculated as follows:

$$\text{SPPR} = \frac{\text{Peak Rotor Angle of 2}^{\text{nd}}\text{ Positive Swing Peak}}{\text{Peak Rotor Angle of 1}^{\text{st}}\text{ Positive Swing Peak}} \leq 0.95$$

-or- Damping Factor % = (1 – SPPR) x 100% $\geq$ 5%

The machine rotor angle damping ratio may be determined by appropriate modal analysis (i.e. Prony Analysis) where the following equivalent requirement must be met:

Damping Ratio $\geq$ 0.0081633

2. Successive Positive Peak Ratio Five (SPPR5) must be less than or equal to 0.774 where SPPR5 is calculated as follows:

$$\text{SPPR5} = \frac{\text{Peak Rotor Angle of 5}^{\text{th}}\text{ Positive Swing Peak}}{\text{Peak Rotor Angle of 1}^{\text{st}}\text{ Positive Swing Peak}} \leq 0.774$$

-or- Damping Factor % = (1 – SPPR) x 100% $\geq$ 22.6%

The machine rotor angle damping ratio may be determined by appropriate modal analysis (i.e. Prony Analysis) where the following equivalent requirement must be met:

$$\text{Damping Ratio} \geq 0.0081633$$

Qualitatively, these Requirements are shown below:

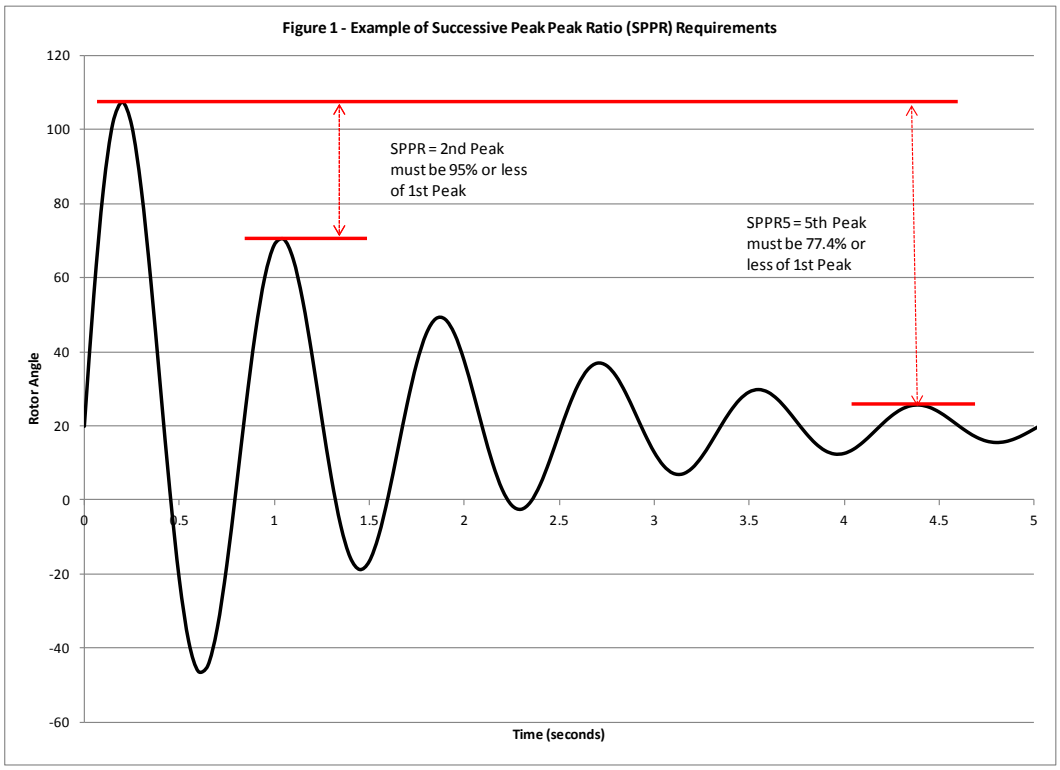

TRANSIENT VOLTAGE RECOVERY REQUIREMENT

Any time after a disturbance is cleared; bus voltages on the Bulk Electric System shall not swing outside of the bandwidth of 0.70 per unit to 1.20 per unit.

Qualitatively, this Requirement is shown below:

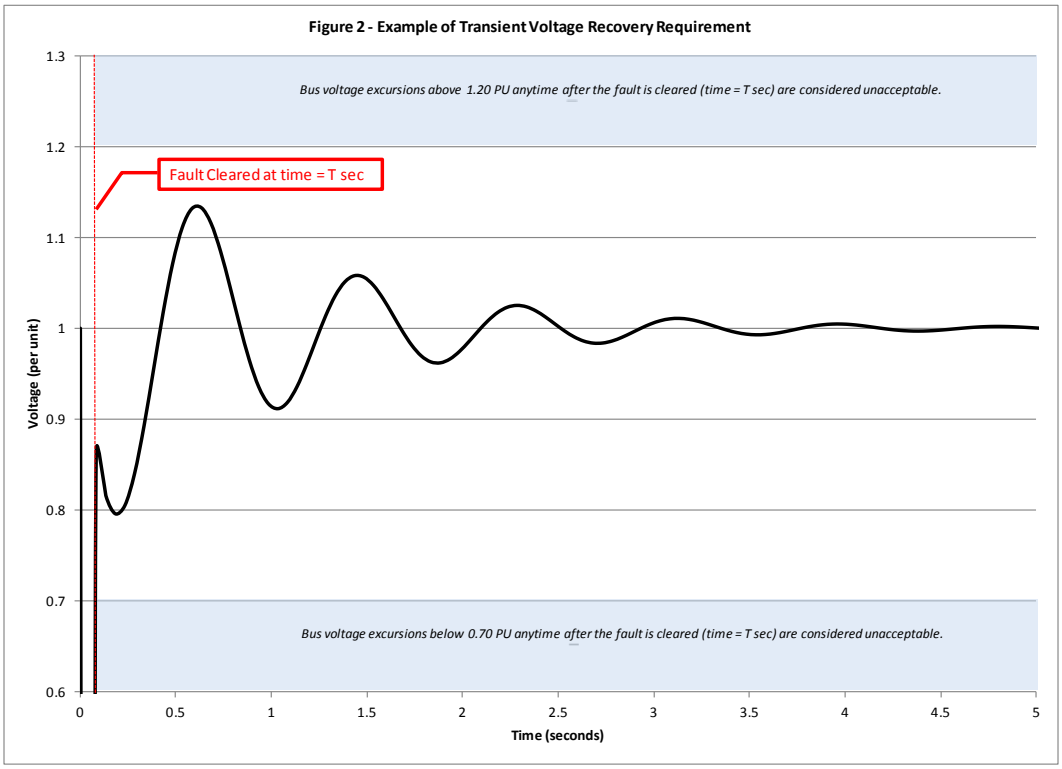

APPENDIX C

DYNAMIC STABILITY PLOTS FOR CLUSTER SCENARIO

1)

DYNAMIC STABILITY PLOTS FOR 2015 SUMMER PEAK CASE

(SEE APPENDIX C-1 SUBMITTED IN A SEPARATE FILE)

2)

DYNAMIC STABILITY PLOTS FOR 2015 WINTER PEAK CASE

(SEE APPENDIX C-2 SUBMITTED IN A SEPARATE FILE)

3)

DYNAMIC STABILITY PLOTS FOR 2025 SUMMER PEAK CASE

(SEE APPENDIX C-3 SUBMITTED IN A SEPARATE FILE)

APPENDIX D

DYNAMIC STABILITY PLOTS FOR STAND-ALONE SCENARIO

1)

"GEN-2015-021"

DYNAMIC STABILITY PLOTS FOR 2015 SUMMER PEAK CASE

(SEE APPENDIX D-1 SUBMITTED IN A SEPARATE FILE)

2)

"GEN-2015-021"

DYNAMIC STABILITY PLOTS FOR 2015 WINTER PEAK CASE

(SEE APPENDIX D-2 SUBMITTED IN A SEPARATE FILE)

3)

"GEN-2015-021"

DYNAMIC STABILITY PLOTS FOR 2025 SUMMER PEAK CASE

(SEE APPENDIX D-3 SUBMITTED IN A SEPARATE FILE)

4)

"GEN-2015-026"

DYNAMIC STABILITY PLOTS FOR 2015 SUMMER PEAK CASE

(SEE APPENDIX D-4 SUBMITTED IN A SEPARATE FILE)

5)

"GEN-2015-026"

DYNAMIC STABILITY PLOTS FOR 2015 WINTER PEAK CASE

(SEE APPENDIX D-5 SUBMITTED IN A SEPARATE FILE)

6)

"GEN-2015-026"

DYNAMIC STABILITY PLOTS FOR 2025 SUMMER PEAK CASE

(SEE APPENDIX D-6 SUBMITTED IN A SEPARATE FILE)

7)

"GEN-2015-027"

DYNAMIC STABILITY PLOTS FOR 2015 SUMMER PEAK CASE

(SEE APPENDIX D-7 SUBMITTED IN A SEPARATE FILE)

8)

"GEN-2015-027"

DYNAMIC STABILITY PLOTS FOR 2015 WINTER PEAK CASE

(SEE APPENDIX D-8 SUBMITTED IN A SEPARATE FILE)

9)

"GEN-2015-027"

DYNAMIC STABILITY PLOTS FOR 2025 SUMMER PEAK CASE

(SEE APPENDIX D-9 SUBMITTED IN A SEPARATE FILE)

10)

"ASGI-2015-001"

DYNAMIC STABILITY PLOTS FOR 2015 SUMMER PEAK CASE

(SEE APPENDIX D-10 SUBMITTED IN A SEPARATE FILE)

11)

"ASGI-2015-001"

DYNAMIC STABILITY PLOTS FOR 2015 WINTER PEAK CASE

(SEE APPENDIX D-11 SUBMITTED IN A SEPARATE FILE)

12)

"ASGI-2015-001"

DYNAMIC STABILITY PLOTS FOR 2025 SUMMER PEAK CASE

(SEE APPENDIX D-12 SUBMITTED IN A SEPARATE FILE)

APPENDIX E

POWER FACTOR ANALYSIS RESULTS

Power Factor Requirements for GEN-2015-021 Interconnection Request

	2015 Summer Peak				2015 Winter Peak				2025 Summer Peak			
Cont. No.	P (MW)	Q (MVAR)	Power Factor		P (MW)	Q (MVAR)	Power Factor		P (MW)	Q (MVAR)	Power Factor	
0	20.0	-0.2	1.00	leading	20.0	-0.8	1.00	leading	20.0	-1.3	1.00	leading
1	20.0	-0.1	1.00	leading	20.0	-0.5	1.00	leading	20.0	-0.8	1.00	leading
3	20.0	0.2	1.00	lagging	20.0	-0.2	1.00	leading	20.0	-1.0	1.00	leading
5	20.0	1.5	1.00	lagging	20.0	1.5	1.00	lagging	20.0	0.5	1.00	lagging
7	20.0	-0.2	1.00	leading	20.0	-0.8	1.00	leading	20.0	-1.3	1.00	leading
8	20.0	3.1	0.99	lagging	20.0	2.6	0.99	lagging	20.0	1.6	1.00	lagging
9	20.0	0.5	1.00	lagging	20.0	-0.2	1.00	leading	20.0	-0.7	1.00	leading
10	20.0	-0.1	1.00	leading	20.0	-0.7	1.00	leading	20.0	-1.2	1.00	leading
11	20.0	1.3	1.00	lagging	20.0	0.8	1.00	lagging	20.0	0.0	1.00	
12	20.0	3.1	0.99	lagging	20.0	1.6	1.00	lagging	20.0	2.3	0.99	lagging
13	20.0	0.1	1.00	lagging	20.0	-0.4	1.00	leading	20.0	-0.9	1.00	leading
14	20.0	-0.3	1.00	leading	20.0	-0.9	1.00	leading	20.0	-1.3	1.00	leading
15	20.0	-0.1	1.00	leading	20.0	-0.7	1.00	leading	20.0	-1.2	1.00	leading
16	20.0	-0.3	1.00	leading	20.0	-0.7	1.00	leading	20.0	-1.3	1.00	leading
17	20.0	-5.4	0.97	leading	20.0	-4.0	0.98	leading	20.0	-5.4	0.97	leading
18	20.0	0.1	1.00	lagging	20.0	-0.4	1.00	leading	20.0	-0.9	1.00	leading
20	20.0	2.0	1.00	lagging	20.0	2.0	1.00	lagging	20.0	1.1	1.00	lagging
21	20.0	3.6	0.98	lagging	20.0	2.5	0.99	lagging	20.0	3.9	0.98	lagging
23	20.0	3.2	0.99	lagging	20.0	1.6	1.00	lagging	20.0	2.5	0.99	lagging
24	20.0	0.9	1.00	lagging	20.0	0.8	1.00	lagging	20.0	0.2	1.00	lagging
25	20.0	-0.2	1.00	leading	20.0	-0.7	1.00	leading	20.0	-1.2	1.00	leading
27	20.0	-0.1	1.00	leading	20.0	-0.6	1.00	leading	20.0	-1.0	1.00	leading
28	20.0	0.0	1.00		20.0	-0.6	1.00	leading	20.0	-0.9	1.00	leading
29	20.0	-0.2	1.00	leading	20.0	-0.4	1.00	leading	20.0	-1.2	1.00	leading
30	20.0	2.9	0.99	lagging	20.0	1.0	1.00	lagging	20.0	2.0	1.00	lagging
31	20.0	9.7	0.90	lagging	20.0	8.7	0.92	lagging	20.0	8.3	0.92	lagging
32	20.0	1.8	1.00	lagging	20.0	1.4	1.00	lagging	20.0	0.7	1.00	lagging
33	20.0	1.6	1.00	lagging	20.0	1.7	1.00	lagging	20.0	0.9	1.00	lagging
34	20.0	1.6	1.00	lagging	20.0	1.6	1.00	lagging	20.0	0.6	1.00	lagging
35	20.0	4.0	0.98	lagging	20.0	2.8	0.99	lagging	20.0	1.9	1.00	lagging
40	20.0	2.2	0.99	lagging	20.0	1.7	1.00	lagging	20.0	2.2	0.99	lagging
41	20.0	-1.3	1.00	leading	20.0	-0.8	1.00	leading	20.0	-1.3	1.00	leading
42	20.0	-1.3	1.00	leading	20.0	-0.8	1.00	leading	20.0	-1.3	1.00	leading
43	20.0	-1.3	1.00	leading	20.0	-0.8	1.00	leading	20.0	-1.3	1.00	leading
44	20.0	-1.2	1.00	leading	20.0	-0.7	1.00	leading	20.0	-1.2	1.00	leading
45	20.0	-1.2	1.00	leading	20.0	-0.7	1.00	leading	20.0	-1.2	1.00	leading

46	20.0	-1.2	1.00	leading	20.0	-0.4	1.00	leading	20.0	-1.2	1.00	leading
47	20.0	-1.3	1.00	leading	20.0	-0.7	1.00	leading	20.0	-1.3	1.00	leading
48	20.0	-1.2	1.00	leading	20.0	-0.6	1.00	leading	20.0	-1.2	1.00	leading
49	20.0	-1.2	1.00	leading	20.0	-0.6	1.00	leading	20.0	-1.2	1.00	leading
50	20.0	-1.3	1.00	leading	20.0	-0.8	1.00	leading	20.0	-1.3	1.00	leading
51	20.0	-1.2	1.00	leading	20.0	-0.7	1.00	leading	20.0	-1.2	1.00	leading
52	20.0	-1.3	1.00	leading	20.0	-0.8	1.00	leading	20.0	-1.3	1.00	leading
53	20.0	-1.3	1.00	leading	20.0	-0.8	1.00	leading	20.0	-1.3	1.00	leading
54	20.0	-1.2	1.00	leading	20.0	-0.7	1.00	leading	20.0	-1.2	1.00	leading
55	20.0	-1.2	1.00	leading	20.0	-0.7	1.00	leading	20.0	-1.2	1.00	leading
56	20.0	-16.1	0.78	leading	20.0	-4.7	0.97	leading	20.0	-16.1	0.78	leading
57	20.0	-11.3	0.87	leading	20.0	-1.6	1.00	leading	20.0	-11.3	0.87	leading
58	20.0	-8.9	0.91	leading	20.0	-1.2	1.00	leading	20.0	-8.9	0.91	leading
59	20.0	-0.6	1.00	leading	20.0	1.8	1.00	lagging	20.0	-0.6	1.00	leading
60	20.0	-5.5	0.96	leading	20.0	-3.1	0.99	leading	20.0	-5.5	0.96	leading
61	20.0	-0.2	1.00	leading	20.0	-0.6	1.00	leading	20.0	-1.4	1.00	leading
62	20.0	1.6	1.00	lagging	20.0	0.7	1.00	lagging	20.0	0.1	1.00	lagging
63	20.0	0.9	1.00	lagging	20.0	0.7	1.00	lagging	20.0	-1.1	1.00	leading
64	20.0	4.3	0.98	lagging	20.0	3.7	0.98	lagging	20.0	4.1	0.98	lagging
65	20.0	-3.3	0.99	leading	20.0	-3.3	0.99	leading	20.0	-5.3	0.97	leading
66	20.0	-1.1	1.00	leading	20.0	-2.8	0.99	leading	20.0	-2.3	0.99	leading
67	20.0	3.9	0.98	lagging	20.0	-0.5	1.00	leading	20.0	3.3	0.99	lagging
68	20.0	3.9	0.98	lagging	20.0	3.4	0.99	lagging	20.0	3.6	0.98	lagging
69	20.0	-8.1	0.93	leading	20.0	-7.4	0.94	leading	20.0	-10.2	0.89	leading
70	20.0	7.3	0.94	lagging	20.0	2.9	0.99	lagging	20.0	4.0	0.98	lagging
71	20.0	-1.8	1.00	leading	20.0	-1.8	1.00	leading	20.0	-2.8	0.99	leading
72	20.0	3.5	0.99	lagging	20.0	4.9	0.97	lagging	20.0	3.0	0.99	lagging
73	20.0	-0.2	1.00	leading	20.0	-0.8	1.00	leading	20.0	-1.3	1.00	leading
74	20.0	-1.7	1.00	leading	20.0	-0.1	1.00	leading	20.0	0.9	1.00	lagging
75	20.0	4.5	0.98	lagging	20.0	4.9	0.97	lagging	20.0	3.6	0.98	lagging
76	20.0	-0.3	1.00	leading	20.0	-0.8	1.00	leading	20.0	-1.4	1.00	leading
77	20.0	3.3	0.99	lagging	20.0	4.1	0.98	lagging	20.0	2.3	0.99	lagging
78	20.0	0.1	1.00	lagging	20.0	0.0	1.00		20.0	-1.1	1.00	leading
79	20.0	0.0	1.00		20.0	-0.5	1.00	leading	20.0	-1.0	1.00	leading
80	20.0	-0.7	1.00	leading	20.0	-3.2	0.99	leading	20.0	-0.3	1.00	leading
81	20.0	-0.4	1.00	leading	20.0	-1.0	1.00	leading	20.0	-1.5	1.00	leading
82	20.0	0.8	1.00	lagging	20.0	-0.8	1.00	leading	20.0	-0.1	1.00	leading
83	20.0	-0.2	1.00	leading	20.0	-0.8	1.00	leading	20.0	-1.3	1.00	leading
84	20.0	-0.2	1.00	leading	20.0	-0.8	1.00	leading	20.0	-1.3	1.00	leading
85	20.0	-0.2	1.00	leading	20.0	-0.8	1.00	leading	20.0	-1.3	1.00	leading
86	20.0	-0.3	1.00	leading	20.0	-0.7	1.00	leading	20.0	-1.3	1.00	leading

87	20.0	-0.2	1.00	leading	20.0	-0.7	1.00	leading	20.0	-1.3	1.00	leading
88	20.0	-0.3	1.00	leading	20.0	-0.7	1.00	leading	20.0	-1.3	1.00	leading
89	20.0	-0.1	1.00	leading	20.0	-0.6	1.00	leading	20.0	-1.1	1.00	leading

Power Factor Requirements for GEN-2015-026 Interconnection Request

	2015 Summer Peak				2015 Winter Peak				2025 Summer Peak			
Cont. No.	P (MW)	Q (MVAR)	Power Factor		P (MW)	Q (MVAR)	Power Factor		P (MW)	Q (MVAR)	Power Factor	
0	173.9	-18.2	0.99	leading	173.9	-20.5	0.99	leading	173.88	-19.7	0.99	leading
1	173.9	-1.0	1.00	leading	173.9	-1.2	1.00	leading	173.88	0.6	1.00	lagging
3	173.9	-1.5	1.00	leading	173.9	-1.6	1.00	leading	173.88	-8.8	1.00	leading
5	173.9	70.2	0.93	lagging	173.9	75.2	0.92	lagging	173.88	65.3	0.94	lagging
7	173.9	-19.6	0.99	leading	173.9	-20.8	0.99	leading	173.88	-21.9	0.99	leading
8	173.9	106.6	0.85	lagging	173.9	109.4	0.85	lagging	173.88	92.4	0.88	lagging
9	173.9	2.4	1.00	lagging	173.9	2.4	1.00	lagging	173.88	-1.3	1.00	leading
10	173.9	-17.2	1.00	leading	173.9	-19.4	0.99	leading	173.88	-22.7	0.99	leading
11	173.9	40.1	0.97	lagging	173.9	40.6	0.97	lagging	173.88	35.8	0.98	lagging
12	173.9	-39.7	0.97	leading	173.9	-58.9	0.95	leading	173.88	-22.9	0.99	leading
13	173.9	0.6	1.00	lagging	173.9	-1.9	1.00	leading	173.88	-1.5	1.00	leading
14	173.9	-24.3	0.99	leading	173.9	-29.0	0.99	leading	173.88	-27.9	0.99	leading
15	173.9	-36.4	0.98	leading	173.9	-35.7	0.98	leading	173.88	-33.0	0.98	leading
16	173.9	-19.9	0.99	leading	173.9	-21.6	0.99	leading	173.88	-22.6	0.99	leading
17	173.9	117.9	0.83	lagging	173.9	141.5	0.78	lagging	173.88	100.4	0.87	lagging
18	173.9	1.8	1.00	lagging	173.9	-0.5	1.00	leading	173.88	0.4	1.00	lagging
20	173.9	36.7	0.98	lagging	173.9	34.5	0.98	lagging	173.88	26.1	0.99	lagging
21	173.9	56.1	0.95	lagging	173.9	38.9	0.98	lagging	173.88	74.7	0.92	lagging
23	173.9	38.5	0.98	lagging	173.9	28.3	0.99	lagging	173.88	39.4	0.98	lagging
24	173.9	29.1	0.99	lagging	173.9	31.2	0.98	lagging	173.88	28.0	0.99	lagging
25	173.9	-17.6	0.99	leading	173.9	-19.9	0.99	leading	173.88	-19.0	0.99	leading
27	173.9	-15.3	1.00	leading	173.9	-17.4	1.00	leading	173.88	-16.1	1.00	leading
28	173.9	-18.1	0.99	leading	173.9	-20.2	0.99	leading	173.88	-19.5	0.99	leading
29	173.9	-21.3	0.99	leading	173.9	-22.3	0.99	leading	173.88	-22.6	0.99	leading
30	173.9	44.0	0.97	lagging	173.9	42.0	0.97	lagging	173.88	40.2	0.97	lagging
31	173.9	-45.0	0.97	leading	173.9	-41.9	0.97	leading	173.88	-44.9	0.97	leading
32	173.9	-22.9	0.99	leading	173.9	-20.9	0.99	leading	173.88	-25.1	0.99	leading
33	173.9	86.3	0.90	lagging	173.9	95.3	0.88	lagging	173.88	81.6	0.91	lagging
34	173.9	75.9	0.92	lagging	173.9	81.7	0.91	lagging	173.88	67.6	0.93	lagging
35	173.9	-29.5	0.99	leading	173.9	-51.1	0.96	leading	173.88	-21.7	0.99	leading
40	173.9	-22.0	0.99	leading	173.9	-58.1	0.95	leading	173.88	-22.0	0.99	leading
41	173.9	-18.8	0.99	leading	173.9	-19.4	0.99	leading	173.88	-18.8	0.99	leading
42	173.9	-19.0	0.99	leading	173.9	-19.5	0.99	leading	173.88	-19.0	0.99	leading
43	173.9	-19.7	0.99	leading	173.9	-20.4	0.99	leading	173.88	-19.7	0.99	leading
44	173.9	-18.9	0.99	leading	173.9	-19.7	0.99	leading	173.88	-18.9	0.99	leading
45	173.9	-18.5	0.99	leading	173.9	-19.2	0.99	leading	173.88	-18.5	0.99	leading

46	173.9	-10.7	1.00	leading	173.9	-2.7	1.00	leading	173.88	-10.7	1.00	leading
47	173.9	-19.7	0.99	leading	173.9	-18.3	0.99	leading	173.88	-19.7	0.99	leading
48	173.9	-14.9	1.00	leading	173.9	-14.0	1.00	leading	173.88	-14.9	1.00	leading
49	173.9	-14.9	1.00	leading	173.9	-14.0	1.00	leading	173.88	-14.9	1.00	leading
50	173.9	-21.9	0.99	leading	173.9	-20.8	0.99	leading	173.88	-21.9	0.99	leading
51	173.9	-18.7	0.99	leading	173.9	-19.5	0.99	leading	173.88	-18.7	0.99	leading
52	173.9	-19.6	0.99	leading	173.9	-20.2	0.99	leading	173.88	-19.6	0.99	leading
53	173.9	-19.4	0.99	leading	173.9	-20.0	0.99	leading	173.88	-19.4	0.99	leading
54	173.9	-18.2	0.99	leading	173.9	-19.2	0.99	leading	173.88	-18.2	0.99	leading
55	173.9	-19.8	0.99	leading	173.9	-19.4	0.99	leading	173.88	-19.8	0.99	leading
56	173.9	-17.4	1.00	leading	173.9	-18.4	0.99	leading	173.88	-17.4	1.00	leading
57	173.9	-17.2	1.00	leading	173.9	-19.7	0.99	leading	173.88	-17.2	1.00	leading
58	173.9	-17.6	0.99	leading	173.9	-19.8	0.99	leading	173.88	-17.6	0.99	leading
59	173.9	-18.8	0.99	leading	173.9	-20.0	0.99	leading	173.88	-18.8	0.99	leading
60	173.9	-17.0	1.00	leading	173.9	-18.3	0.99	leading	173.88	-17.0	1.00	leading
61	173.9	-15.8	1.00	leading	173.9	-19.2	0.99	leading	173.88	-17.7	0.99	leading
62	173.9	-17.9	0.99	leading	173.9	-20.2	0.99	leading	173.88	-19.3	0.99	leading
63	173.9	-18.0	0.99	leading	173.9	-20.6	0.99	leading	173.88	-19.4	0.99	leading
64	173.9	-17.4	1.00	leading	173.9	-19.3	0.99	leading	173.88	-18.8	0.99	leading
65	173.9	-15.3	1.00	leading	173.9	-18.0	0.99	leading	173.88	-16.8	1.00	leading
66	173.9	-11.5	1.00	leading	173.9	-13.3	1.00	leading	173.88	-11.9	1.00	leading
67	173.9	-17.6	0.99	leading	173.9	-20.2	0.99	leading	173.88	-19.2	0.99	leading
68	173.9	-17.6	0.99	leading	173.9	-19.7	0.99	leading	173.88	-18.9	0.99	leading
69	173.9	-18.0	0.99	leading	173.9	-21.0	0.99	leading	173.88	-19.3	0.99	leading
70	173.9	-19.3	0.99	leading	173.9	-21.1	0.99	leading	173.88	-20.3	0.99	leading
71	173.9	-15.2	1.00	leading	173.9	-17.4	1.00	leading	173.88	-17.2	1.00	leading
72	173.9	-15.5	1.00	leading	173.9	-18.8	0.99	leading	173.88	-16.2	1.00	leading
73	173.9	-18.2	0.99	leading	173.9	-20.5	0.99	leading	173.88	-19.7	0.99	leading
74	173.9	17.8	0.99	lagging	173.9	-22.5	0.99	leading	173.88	-18.4	0.99	leading
75	173.9	-2.8	1.00	leading	173.9	2.0	1.00	lagging	173.88	-5.8	1.00	leading
76	173.9	-17.4	1.00	leading	173.9	-19.0	0.99	leading	173.88	-18.3	0.99	leading
77	173.9	-5.4	1.00	leading	173.9	-0.1	1.00	leading	173.88	-8.6	1.00	leading
78	173.9	-17.9	0.99	leading	173.9	-19.1	0.99	leading	173.88	-19.6	0.99	leading
79	173.9	-16.5	1.00	leading	173.9	-19.1	0.99	leading	173.88	-17.9	0.99	leading
80	173.9	-18.1	0.99	leading	173.9	-20.2	0.99	leading	173.88	-19.6	0.99	leading
81	173.9	-17.3	1.00	leading	173.9	-20.2	0.99	leading	173.88	-18.7	0.99	leading
82	173.9	-18.1	0.99	leading	173.9	-22.9	0.99	leading	173.88	-18.9	0.99	leading
83	173.9	-18.2	0.99	leading	173.9	-20.5	0.99	leading	173.88	-19.7	0.99	leading
84	173.9	-18.2	0.99	leading	173.9	-20.4	0.99	leading	173.88	-19.7	0.99	leading
85	173.9	-18.2	0.99	leading	173.9	-20.5	0.99	leading	173.88	-19.7	0.99	leading
86	173.9	-18.4	0.99	leading	173.9	-20.3	0.99	leading	173.88	-20.9	0.99	leading

87	173.9	-15.1	1.00	leading	173.9	-17.2	1.00	leading	173.88	-16.7	1.00	leading
88	173.9	-19.8	0.99	leading	173.9	-21.5	0.99	leading	173.88	-22.5	0.99	leading
89	173.9	-13.1	1.00	leading	173.9	-14.7	1.00	leading	173.88	-16.5	1.00	leading

Power Factor Requirements for GEN-2015-027 Interconnection Request

	2015 Summer Peak				2015 Winter Peak				2025 Summer Peak			
Cont. No.	P (MW)	Q (MVAR)	Power Factor		P (MW)	Q (MVAR)	Power Factor		P (MW)	Q (MVAR)	Power Factor	
0	102.9	1.4	1.00	lagging	102.9	-3.0	1.00	leading	102.9	4.7	1.00	lagging
1	102.9	2.7	1.00	lagging	102.9	-1.5	1.00	leading	102.9	6.4	1.00	lagging
3	102.9	2.7	1.00	lagging	102.9	-1.4	1.00	leading	102.9	5.6	1.00	lagging
5	102.9	7.5	1.00	lagging	102.9	4.4	1.00	lagging	102.9	10.6	0.99	lagging
7	102.9	2.1	1.00	lagging	102.9	-2.4	1.00	leading	102.9	5.0	1.00	lagging
8	102.9	9.6	1.00	lagging	102.9	7.0	1.00	lagging	102.9	12.0	0.99	lagging
9	102.9	3.0	1.00	lagging	102.9	-1.2	1.00	leading	102.9	6.1	1.00	lagging
10	102.9	1.5	1.00	lagging	102.9	-2.8	1.00	leading	102.9	4.5	1.00	lagging
11	102.9	5.4	1.00	lagging	102.9	1.8	1.00	lagging	102.9	8.4	1.00	lagging
12	102.9	-0.8	1.00	leading	102.9	-5.3	1.00	leading	102.9	2.6	1.00	lagging
13	102.9	2.5	1.00	lagging	102.9	-1.7	1.00	leading	102.9	5.8	1.00	lagging
14	102.9	1.1	1.00	lagging	102.9	-3.4	1.00	leading	102.9	4.3	1.00	lagging
15	102.9	4.0	1.00	lagging	102.9	-0.8	1.00	leading	102.9	6.4	1.00	lagging
16	102.9	3.1	1.00	lagging	102.9	-0.2	1.00	leading	102.9	7.0	1.00	lagging
17	102.9	11.1	0.99	lagging	102.9	12.5	0.99	lagging	102.9	14.5	0.99	lagging
18	102.9	2.6	1.00	lagging	102.9	-1.6	1.00	leading	102.9	5.9	1.00	lagging
20	102.9	2.8	1.00	lagging	102.9	-0.9	1.00	leading	102.9	8.5	1.00	lagging
21	102.9	8.3	1.00	lagging	102.9	3.2	1.00	lagging	102.9	15.6	0.99	lagging
23	102.9	2.6	1.00	lagging	102.9	-2.1	1.00	leading	102.9	6.1	1.00	lagging
24	102.9	2.6	1.00	lagging	102.9	-1.8	1.00	leading	102.9	5.9	1.00	lagging
25	102.9	1.4	1.00	lagging	102.9	-3.0	1.00	leading	102.9	4.7	1.00	lagging
27	102.9	1.7	1.00	lagging	102.9	-2.7	1.00	leading	102.9	5.3	1.00	lagging
28	102.9	2.1	1.00	lagging	102.9	-2.4	1.00	leading	102.9	5.7	1.00	lagging
29	102.9	1.4	1.00	lagging	102.9	-3.0	1.00	leading	102.9	4.6	1.00	lagging
30	102.9	3.2	1.00	lagging	102.9	-1.1	1.00	leading	102.9	6.5	1.00	lagging
31	102.9	1.1	1.00	lagging	102.9	-1.4	1.00	leading	102.9	4.5	1.00	lagging
32	102.9	1.7	1.00	lagging	102.9	-2.5	1.00	leading	102.9	4.9	1.00	lagging
33	102.9	8.7	1.00	lagging	102.9	6.0	1.00	lagging	102.9	12.1	0.99	lagging
34	102.9	7.9	1.00	lagging	102.9	4.9	1.00	lagging	102.9	10.8	0.99	lagging
35	102.9	18.4	0.98	lagging	102.9	23.1	0.98	lagging	102.9	18.3	0.98	lagging
40	102.9	4.3	1.00	lagging	102.9	-3.1	1.00	leading	102.9	4.3	1.00	lagging
41	102.9	4.9	1.00	lagging	102.9	-2.7	1.00	leading	102.9	4.9	1.00	lagging
42	102.9	4.8	1.00	lagging	102.9	-2.7	1.00	leading	102.9	4.8	1.00	lagging
43	102.9	4.6	1.00	lagging	102.9	-3.0	1.00	leading	102.9	4.6	1.00	lagging
44	102.9	4.7	1.00	lagging	102.9	-2.9	1.00	leading	102.9	4.7	1.00	lagging
45	102.9	4.8	1.00	lagging	102.9	-2.9	1.00	leading	102.9	4.8	1.00	lagging

46	102.9	9.5	1.00	lagging	102.9	6.8	1.00	lagging	102.9	9.5	1.00	lagging
47	102.9	5.7	1.00	lagging	102.9	-1.3	1.00	leading	102.9	5.7	1.00	lagging
48	102.9	5.1	1.00	lagging	102.9	-2.3	1.00	leading	102.9	5.1	1.00	lagging
49	102.9	5.1	1.00	lagging	102.9	-2.3	1.00	leading	102.9	5.1	1.00	lagging
50	102.9	5.0	1.00	lagging	102.9	-2.4	1.00	leading	102.9	5.0	1.00	lagging
51	102.9	4.8	1.00	lagging	102.9	-2.9	1.00	leading	102.9	4.8	1.00	lagging
52	102.9	4.7	1.00	lagging	102.9	-2.9	1.00	leading	102.9	4.7	1.00	lagging
53	102.9	4.7	1.00	lagging	102.9	-2.9	1.00	leading	102.9	4.7	1.00	lagging
54	102.9	4.8	1.00	lagging	102.9	-2.8	1.00	leading	102.9	4.8	1.00	lagging
55	102.9	4.7	1.00	lagging	102.9	-2.8	1.00	leading	102.9	4.7	1.00	lagging
56	102.9	5.9	1.00	lagging	102.9	-2.0	1.00	leading	102.9	5.9	1.00	lagging
57	102.9	4.9	1.00	lagging	102.9	-2.8	1.00	leading	102.9	4.9	1.00	lagging
58	102.9	5.1	1.00	lagging	102.9	-2.7	1.00	leading	102.9	5.1	1.00	lagging
59	102.9	4.5	1.00	lagging	102.9	-3.0	1.00	leading	102.9	4.5	1.00	lagging
60	102.9	5.0	1.00	lagging	102.9	-2.6	1.00	leading	102.9	5.0	1.00	lagging
61	102.9	1.2	1.00	lagging	102.9	-3.1	1.00	leading	102.9	4.5	1.00	lagging
62	102.9	1.6	1.00	lagging	102.9	-2.7	1.00	leading	102.9	4.9	1.00	lagging
63	102.9	1.3	1.00	lagging	102.9	-3.0	1.00	leading	102.9	4.5	1.00	lagging
64	102.9	2.5	1.00	lagging	102.9	-1.5	1.00	leading	102.9	5.9	1.00	lagging
65	102.9	1.7	1.00	lagging	102.9	-2.6	1.00	leading	102.9	5.1	1.00	lagging
66	102.9	4.2	1.00	lagging	102.9	-0.1	1.00	leading	102.9	7.8	1.00	lagging
67	102.9	1.9	1.00	lagging	102.9	-2.9	1.00	leading	102.9	5.3	1.00	lagging
68	102.9	2.4	1.00	lagging	102.9	-1.5	1.00	leading	102.9	5.8	1.00	lagging
69	102.9	8.4	1.00	lagging	102.9	4.0	1.00	lagging	102.9	12.2	0.99	lagging
70	102.9	0.9	1.00	lagging	102.9	-3.3	1.00	leading	102.9	4.3	1.00	lagging
71	102.9	3.1	1.00	lagging	102.9	-0.8	1.00	leading	102.9	6.4	1.00	lagging
72	102.9	4.7	1.00	lagging	102.9	2.9	1.00	lagging	102.9	7.9	1.00	lagging
73	102.9	1.4	1.00	lagging	102.9	-3.0	1.00	leading	102.9	4.7	1.00	lagging
74	102.9	-10.7	0.99	leading	102.9	8.7	1.00	lagging	102.9	13.2	0.99	lagging
75	102.9	-6.7	1.00	leading	102.9	-9.7	1.00	leading	102.9	-3.1	1.00	leading
76	102.9	-4.8	1.00	leading	102.9	-8.3	1.00	leading	102.9	-4.8	1.00	leading
77	102.9	-4.5	1.00	leading	102.9	-11.3	0.99	leading	102.9	-0.1	1.00	leading
78	102.9	0.6	1.00	lagging	102.9	-3.3	1.00	leading	102.9	5.3	1.00	lagging
79	102.9	1.2	1.00	lagging	102.9	-3.2	1.00	leading	102.9	4.1	1.00	lagging
80	102.9	2.5	1.00	lagging	102.9	1.8	1.00	lagging	102.9	4.4	1.00	lagging
81	102.9	2.8	1.00	lagging	102.9	-2.4	1.00	leading	102.9	6.4	1.00	lagging
82	102.9	6.9	1.00	lagging	102.9	6.7	1.00	lagging	102.9	8.7	1.00	lagging
83	102.9	1.4	1.00	lagging	102.9	-3.0	1.00	leading	102.9	4.7	1.00	lagging
84	102.9	1.4	1.00	lagging	102.9	-3.0	1.00	leading	102.9	4.6	1.00	lagging
85	102.9	1.4	1.00	lagging	102.9	-3.0	1.00	leading	102.9	4.7	1.00	lagging
86	102.9	2.7	1.00	lagging	102.9	-0.2	1.00	leading	102.9	6.4	1.00	lagging

87	102.9	3.7	1.00	lagging	102.9	-0.5	1.00	leading	102.9	6.7	1.00	lagging
88	102.9	3.4	1.00	lagging	102.9	0.1	1.00	lagging	102.9	7.3	1.00	lagging
89	102.9	1.8	1.00	lagging	102.9	-2.5	1.00	leading	102.9	5.0	1.00	lagging

APPENDIX F

SHORT-CIRCUIT STUDY RESULTS

(SEE APPENDIX F SUBMITTED IN SEPARATE FILES)

M: Group 4 Dynamic Stability Analysis Report

See Power-tek study report on next page

Southwestern Power Pool Inc. (SPP)

Definitive Impact Study
DISIS-2015-001 (Group 04)

Final Report Submitted to
Southwest Power Pool Inc.
July 2015

POWER-tek Global Inc.
Mississauga, Ontario, L4Z 1H8 Canada
647 300 3160
info@powertek-usa.com, www.powertek-usa.com

TABLE OF CONTENTS

1. Executive Summary 1
2. Introduction 2
2.1. Project Overview and Assumptions 2
2.2. Objectives 4
2.3. Models and Simulations Tools Used 4
3. Power Factor Analysis 5
3.1. Methodology 5
3.2. Analysis 5
3.3. Conclusions 13
4. Inductive Reactive Support Analysis 14
5. Short Circuit Analysis 16
5.1. Short Circuit Result for POI Tap on the Ross Beach to Redline 115kV line (560336) 16
5.2. Short Circuit Result for POI Mingo 115kV (531429) 18
6. Stability Analysis for Cluster Scenario 23
6.1. Faults Simulated 23
6.2. Simulation Results for Cluster Scenario 33
7. Stability Analysis for Stand-Alone Scenarios 34
7.1. Fault Simulated for GEN-2010-048 Request 34
7.2. Fault Simulated for GEN-2015-017 Request 38
7.3. Simulation Results for Stand-Alone Scenarios 44
8. Conclusions 45
9. Appendix A: 2015 Winter Peak Case Stability Run Plots – Cluster 46
10. Appendix B: 2015 Summer Peak Case Stability Run Plots – Cluster 46
11. Appendix C: 2025 Summer Peak Case Stability Run Plots – Cluster 46
12. Appendix D: Project Model Data 46
13. Appendix E1: 2015 Summer Peak Case Stability Run Plots for GEN-2010-048 Stand-Alone Scenario 46
14. Appendix E2: 2015 Winter Peak Case Stability Run Plots for GEN-2010-048 Stand-Alone Scenario .. 46
15. Appendix E3: 2025 Summer Peak Case Stability Run Plots for GEN-2010-048 Stand-Alone Scenario 46
16. Appendix F1: 2015 Summer Peak Case Stability Run Plots for GEN-2015-017 Stand-Alone Scenario.. 46
17. Appendix F2: 2015 Winter Peak Case Stability Run Plots for GEN-2015-017 Stand-Alone Scenario.... 46
18. Appendix F3: 2025 Summer Peak Case Stability Run Plots for GEN-2015-017 Stand-Alone Scenario. 46

1. Executive Summary

The DISIS-2015-001 (Group 04) Impact Study is a generation interconnection study performed by POWER-tek Global Inc. for Southwest Power Pool (SPP). This report presents the results of impact study comprising of power factor, short circuit, and stability analyses for both cluster and stand-alone scenarios of the proposed interconnection projects under DISIS-2015-001 (Group 04) ("The Projects") as described in Table 1.1 below:

Table 1.1: Interconnection Request

Request	Size (MW)	Generator Model	Point of Interconnection (POI)
GEN-2010-048	70	Nordex 2.5MW (28 generators)	Tap on the Ross Beach to Redline 115kV line (560336)
GEN-2015-017	155 Summer 172 Winter	GENROU	Mingo 115kV (531429)

Power factor analysis, short circuit analysis up to 5 Buses away from each point of interconnection (POI), and transient stability simulations were performed for the Projects in service at its full output. SPP provided three base cases for Summer-2015, Winter-2015, and Summer-2025, each comprising of a power flow, sequence data and corresponding dynamics database. The previous queued request projects were already modeled in the base cases. The power factor analysis consists of running all N-1, three phase contingencies shown in the Fault Definitions table (Table 3 in the RFP) in power flow to advise the necessary power factor at the POI for each contingency.

The power factor analysis indicates that interconnection requests i.e., GEN-2010-048, and GEN-2015-017 are required to provide reactive power as indicated in Tables 3.2.2 through 3.2.4. Per the SPP OATT, the Interconnection Customer will be required to provide 95% lagging (supplying vars) and 95% leading (absorbing vars) at the POI.

To offset the capacitive effects of the collector system and transmission line of the wind farm under low wind or no wind conditions, the inductive reactive support analysis was performed for summer 2015 scenario. The analysis indicates that at POI i.e., Tap on the Ross Beach to Redline 115kV line (560336) 2.9 MVAR MVAR reactor is required at Bus 580062 to maintain zero MVAR flow for the GEN-2010-048 generator lead. Maintaining zero MVar flow at the POI at all times is not possible with static reactor banks. It will be determined on a case by case basis for each generator as to whether additional reactor banks are required for low wind conditions.

The short circuit analysis is performed on the power flow models for the 2025 summer peak season for cluster scenario model. The results are documented for both 3 phase fault as well as single line to ground fault up to 5 buses away from the POI i.e., Tap on the Ross Beach to Redline 115kV line (560336), and Mingo 115kV (531429).

There are no impacts on the stability performance of the SPP system during both cluster and stand-alone scenarios for the contingencies tested on the provided base cases. The study machines stayed on-line and stable for all simulated faults. The Project stability simulations with forty five (45) specified test disturbances did not show instability problems in the SPP system. Any oscillations were damped out.

2. Introduction

2.1. Project Overview and Assumptions

The DISIS-2015-001 (Group 04) Impact Study is a generation interconnection study performed by POWER-tek Global Inc. for SPP. This report presents the results of impact study comprising of power factor, short circuit analysis, and stability analyses for both cluster and stand-alone scenarios of the proposed interconnection projects under DISIS-2015-001 (Group 04) ("The Projects") as described in Table 2.1.1 below:

Table 2.1.1: Interconnection requests

Request	Size (MW)	Wind Turbine Model	Point of Interconnection
GEN-2010-048	70	Nordex 2.5MW (28 generators)	Tap on the Ross Beach to Redline 115kV line (560336)
GEN-2015-017	155 Summer 172 Winter	GENROU	Mingo 115kV (531429)

Figure 2.1.1, and Figure 2.1.2respectively show the single line diagram for the interconnection of the Projects to present and planned system of SPP. This arrangement was modeled and studied in power flow cases for these projects.

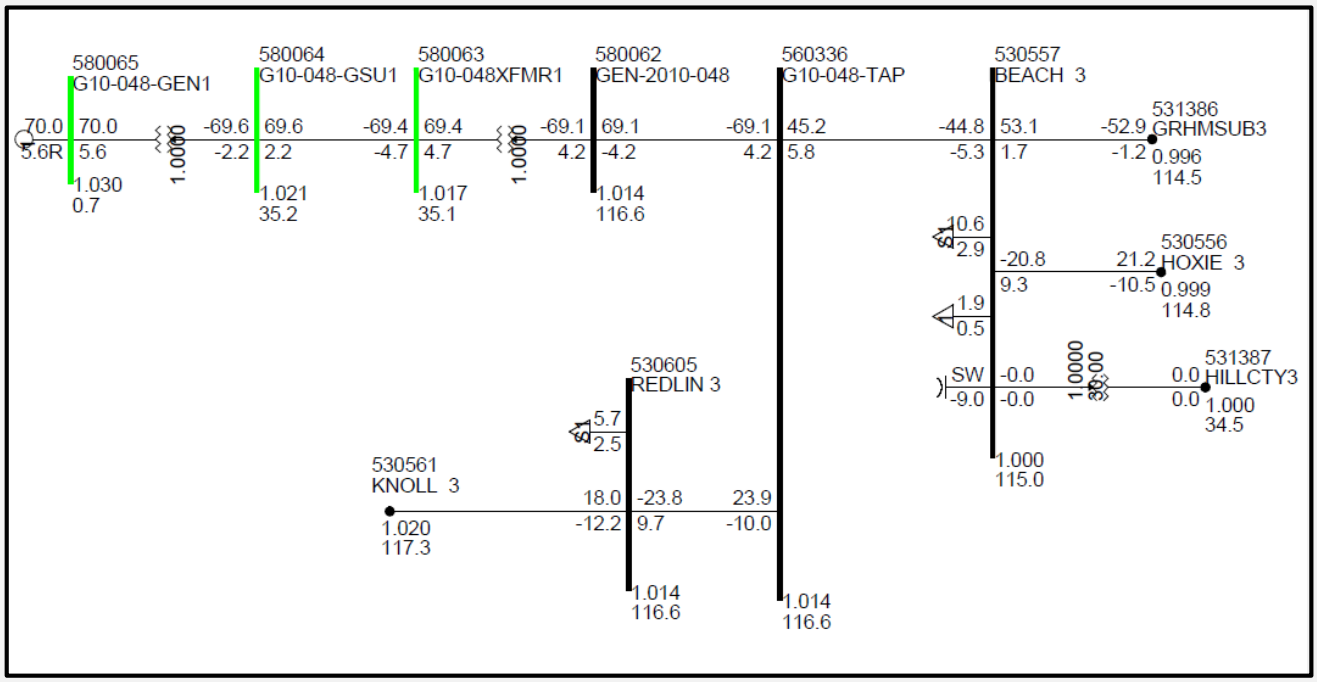

Figure 2.1.1: Power flow single line diagram for GEN-2010-048 and surrounding system components

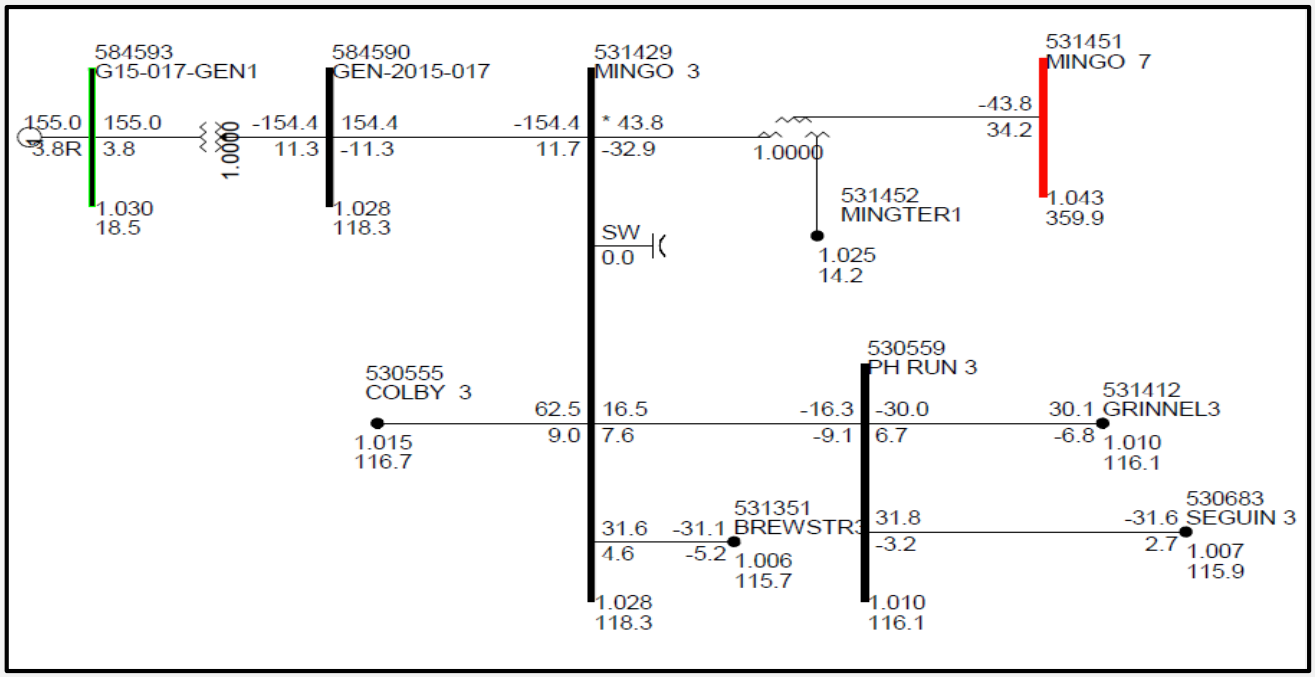

Figure 2.1.2: Power flow single line diagram for GEN-2015-017 and surrounding system components

Appendix-D contains the machines, interconnection, and machines user model parameters.

Table 2.1.2 below shows the list of prior queued projects modeled in the base case.

Table 2.1.2: List of previous queued request projects

Request	Size (MW)	Wind Turbine Model	Point of Interconnection
GEN-2001-039M	99.0	Vestas V90VCRS 3.0MW	Central Plains 115kV (531485)
GEN-2003-006A	201.0	Vestes V90VCRS	Elm Creek 230kV (539639)
GEN-2003-019	249.3	GE 1.5MW & Vestas 3.0MW	Smoky Hills 230kV (530592)
GEN-2006-031	76.0	GENROU (530674, Machine ID 01; 530675, Machine ID 07)	Knoll 115kV (530561)
GEN-2008-017	300.0	GE 1.5MW	Setab 345kV (531465)
GEN-2008-092	201.0	GE 1.5MW	Knoll 230kV (530558)
GEN-2009-008	198.9	GE 1.7MW	South Hays 230kV (530582)
GEN-2009-020/GEN-2014-025	50.75	Siemens SWT-2.415MW-108	Tap on the Balzine to Nekoma 69kV line (560306)
GEN-2010-057	201.0	GE 1.5MW	Rice County 230kV (530686)

Request	Size (MW)	Wind Turbine Model	Point of Interconnection
ASGI-2013-004	27.6 Summer 36.6 Winter	GENSAL (583693)	Morris 115kV (531430)
GEN-2013-033	28.0 (uprate of GEN-2006-031)	GENSAL (Bus 530675, Machine ID 10)	Knoll 115kV (530561)
GEN-2014-041	123.1	Siemens SWT-2.415MW-108	Arnold 115kV (531409)

ATC (Available Transfer Capability) studies were not performed as part of this study. These studies will be required at the time transmission service is actually requested. Additional transmission upgrades may be required based on that analysis.

Study assumptions in general have been based on the specific information and data provided by SPP. The accuracy of the conclusions contained within this study is dependent on the assumptions made with respect to other generation additions and transmission improvements planned by other entities. Changes in the assumptions of the timing of other generation additions or transmission improvements may affect this study's conclusions.

2.2. Objectives

The objectives of the study are to conduct power factor analysis and to determine the impact on system stability of interconnecting the proposed wind farms to SPP's transmission system.

2.3. Models and Simulations Tools Used

Version 32 of the Siemens, PSS/E^{TM} power system simulation program was used in this study.

SPP provided its latest stability database cases for summer-2015, winter-2015, and summer-2025 peak seasons. The Project's PSS/E model had been developed prior to this study and was included in the power flow case and the dynamics database. Machines, interconnection and dynamic model data for the Project plants is provided in Appendix D.

Power flow single line diagram of the projects in summer 2015 peak condition are shown in Figure 2.1.1, and Figure 2.1.2 respectively. These Figures shows that wind farms model includes representation of the radial transmission line, the substation transformer from transmission voltage (115kV and 345kV) to 34.5V. The remainder of each wind farm is represented by lumped equivalents including a generator, a step-up transformer, and collector system impedance.

No special modeling is required of line relays in these cases, except for the special modeling related to the wind-turbine tripping.

All generators in Areas 520, 524, 525, 526, 531, 534, 536, and 640 were monitored.

3. Power Factor Analysis

3.1. Methodology

Power factor analysis was conducted for the Project using the following methodology:

1. Replace the wind farm by a generator at the high side bus 345 kV, 138 kV, 115kV, or 69 kV bus, as applicable, with the MW of the wind farms at that point of interconnection.
2. Turn off the wind farm as modeled (as well as previous queued projects at the same point of interconnection).
3. Model a var generator at the Project's high voltage side, 345 kV, 138 kV, 115kV, or 69kV bus, as applicable. The var generator is set to hold a voltage schedule at the POI consistent with the voltage schedule in the provided power flow cases for summer and winter or 1.0 pu voltage, whichever is higher.
4. Perform the steady state contingency analysis to determine the power factor necessary at the POI for each contingency.
5. If the required power factor at the POI is beyond the capability of the studied wind turbines to meet (at the POI) capacitor banks may be considered for the stability analysis. The preference is to locate the capacitance banks on the 34.5 kV customer side. Factors to sizing capacitor banks include:
   5.1. The ability of the wind farm to meet FERC Order 661A (low voltage ride through) with and without capacitor banks.
   5.2. The ability of the wind farm to meet FERC Order 661A (wind farm recovery to pre-fault voltage).
   5.3. If wind farms trips on high voltage, power factor lower than unity may be required.

3.2. Analysis

Analysis was performed for the proposed Projects with all prior queued projects in service. A var generator was modeled at the point of interconnection and was set to hold a voltage schedule at the POI consistent with the voltage schedule in the provided power flow cases or 1 p.u. whichever is higher. The voltages for these Projects are summarized in Table 3.2.1. All upgrades and instructions were made in the base cases. No other changes were made in the base cases provided other than the addition of the var generators. Contingency analysis was run for provided list of contingencies.

Table 3.2.1: POI voltages for the summer and winter peak cases

Request	Point of Interconnection	Size (MW)	Base Case Voltage (p.u.)		
			Summer 2015 Peak	Winter 2015 Peak	Summer 2025 Peak
GEN-2010-048	Tap on the Ross Beach to Redline 115kV line (560336)	70	1.014	1.025	1.01
GEN-2015-017	Mingo 115kV (531429)	155 Summer 172 Winter	1.028	1.024	1.027

The details of the var requirement during contingencies are highlighted in Table 3.2.2, 3.2.3 and 3.2.4. The highest and the lowest values obtained are highlighted in these tables.

1. For 2015 summer case (GEN-2010-048 analysis): The maximum var generator supply is 4.6 MVARs at 1.0 (lagging power factor) for the outage of 530561 [KNOLL 3 115.00] TO BUS 530551 [SALINE 3 115.00] CKT outage. The minimum var requirement is -23.6 MVAR at 0.95 (leading power factor) for outage of 560336 [G10-048-TAP 115.00] TO BUS 530557 [BEACH 3 115.00] CKT outage.
2. For 2015 summer case (GEN-2015-017 analysis): The maximum var generator supply is 16.6 MVARs at 0.99 (lagging power factor) for the outage of 531456 [NESSCTY3 115.00] TO BUS 531414 [RANSOM 3 115.00] CKT outage. The minimum var requirement is -24.7 MVAR at 0.99 (leading power factor) for outage of 640325 [REDWILO3 345.00] TO BUS 640183 [GENTLMN3 345.00] CKT outage.

Table 3.2.2: Var Generator output in 2015 summer peak case for DISIS-2015-001 (Group 04)

2015 Summer Peak Case Power Factor Study:

Generation Interconnection Request Analysis Rated MW of Wind Farms OR at POI (MW) Rated MVAR of Wind Farms OR at POI (MVAR)						**GEN-2010-048** MW at POI **70.0** MVAR at POI **21.2**		**GEN-2015-017** MW at POI **155** MVAR at POI **96**	
Cont. Name	**From Bus (# & Name)**		**To Bus (# & Name)**		**ID**	**MVAR at POI**	**P.F at POI**	**MVAR at POI**	**P.F at POI**
	Base Case MVAR Flow				N/A	-4.1	1.00	-12.8	1.00
FLT01-3PH	530582	S HAYS6 230.00	530584	POSTROCK6 230.00	CKT 1	-4.1	1.00	-12.6	1.00
FLT02-3PH	530558	KNOLL 6 230.00	530592	SMOKYHL6 230.00	CKT 1	-3.8	1.00	-12.2	1.00
FLT03-3PH	530561	KNOLL 3 115.00	530551	SALINE 3 115.00	CKT 1	4.6	1.00	-9.8	1.00
FLT04-3PH	530561	KNOLL 3 115.00	530581	N HAYS3 115.00	CKT 1	-4.2	1.00	-12.6	1.00
FLT05-3PH	530561	KNOLL 3 115.00	530605	REDLIN 3 115.00	CKT 1	3.1	1.00	-9.6	1.00

Generation Interconnection Request Analysis Rated MW of Wind Farms OR at POI (MW) Rated MVAR of Wind Farms OR at POI (MVAR)						GEN-2010-048 MW at POI **70.0** MVAR at POI **21.2**		GEN-2015-017 MW at POI **155** MVAR at POI **96**	
Cont. Name	**From Bus (# & Name)**		**To Bus (# & Name)**		**ID**	**MVAR at POI**	**P.F at POI**	**MVAR at POI**	**P.F at POI**
FLT06-3PH	531456	NESSCTY3 115.00	531414	RANSOM 3 115.00	CKT 1	2.7	1.00	16.6	0.99
FLT07-3PH	531456	NESSCTY3 115.00	531359	BEELER 3 115.00	CKT 1	-4.1	1.00	-12.6	1.00
FLT08-3PH	530583	POSTROCK7 345.00	530584	POSTROCK6 230.00	T/F	-3.7	1.00	-11.1	1.00
FLT09-3PH	530558	KNOLL 6 230.00	530561	KNOLL 3 115.00	T/F	-3.6	1.00	-13.3	1.00
FLT10-3PH	560336	G10-048-TAP 115.00	530557	BEACH 3 115.00	CKT 1	-23.6	0.95	-4.8	1.00
FLT11-3PH	560336	G10-048-TAP 115.00	530605	REDLIN 3 115.00	CKT 1	-6.5	1.00	-8.2	1.00
FLT12-3PH	530557	BEACH 3 115.00	530556	HOXIE 3 115.00	CKT 1	0.1	1.00	-9.8	1.00
FLT13-3PH	530557	BEACH 3 115.00	531386	GRHMSUB3 115.00	CKT 1	-4.1	1.00	-12.8	1.00
FLT14-3PH	530555	COLBY 3 115.00	530554	ATWOOD 3 115.00	CKT 1	2.8	1.00	-4.7	1.00
FLT15-3PH	530555	COLBY 3 115.00	530682	SEGNTP 3 115.00	CKT 1	-2.8	1.00	-10.5	1.00
FLT16-3PH	530555	COLBY 3 115.00	531429	MINGO 3 115.00	CKT 1	3.0	1.00	-15.2	1.00
FLT17-3PH	531429	MINGO 3 115.00	530559	PH RUN 3 115.00	CKT 1	-1.6	1.00	-18.1	0.99
FLT18-3PH	531429	MINGO 3 115.00	531351	BREWSTR3 115.00	CKT 1	-3.2	1.00	-18.9	0.99
FLT19-3PH	531451	MINGO 7 345.00	531429	MINGO 3 115.00	T/F	1.7	1.00	14.5	1.00
FLT20-3PH	531451	MINGO 7 345.00	640325	REDWILO3 345.00	CKT 1	-0.1	1.00	4.7	1.00
FLT21-3PH	531451	MINGO 7 345.00	531465	SETAB 7 345.00	CKT 1	-5.1	1.00	-11.0	1.00
FLT22-3PH	531465	SETAB 7 345.00	531449	HOLCOMB7 345.00	CKT 1	-0.9	1.00	-1.2	1.00
FLT23-3PH	531465	SETAB 7 345.00	531464	SETAB 3 115.00	T/F	-3.9	1.00	-14.8	1.00
FLT24-3PH	531373	RHOADES3 115.00	531372	NORCATR3 115.00	CKT 1	-4.9	1.00	-11.8	1.00
FLT25-3PH	531373	RHOADES3 115.00	531386	GRHMSUB3 115.00	CKT 1	-14.3	0.98	-11.0	1.00
FLT26-3PH	531373	RHOADES3 115.00	539685	PHLBURG3 115.00	CKT 1	-7.9	0.99	-11.8	1.00
FLT27-3PH	530558	KNOLL 6 230.00	530584	POSTROCK6 230.00	CKT 1	-4.0	1.00	-12.3	1.00

Generation Interconnection Request Analysis Rated MW of Wind Farms OR at POI (MW) Rated MVAR of Wind Farms OR at POI (MVAR)						GEN-2010-048 MW at POI **70.0** MVAR at POI **21.2**		GEN-2015-017 MW at POI **155** MVAR at POI **96**	
Cont. Name	**From Bus (# & Name)**		**To Bus (# & Name)**		**ID**	**MVAR at POI**	**P.F at POI**	**MVAR at POI**	**P.F at POI**
FLT28-3PH	530558	KNOLL 6 230.00	530592	SMOKYHL6 230.00	CKT 1	-3.8	1.00	-12.2	1.00
FLT29-3PH	530607	NESCTY 3 115.00	530606	ALXNDR 3 115.00	CKT 1	-2.2	1.00	-3.1	1.00
FLT30-3PH	530559	PH RUN 3 115.00	530683	SEGUIN 3 115.00	CKT 1	-2.3	1.00	-11.0	1.00
FLT31-3PH	530559	PH RUN 3 115.00	531412	GRINNEL3 115.00	CKT 1	-4.5	1.00	-15.4	1.00
FLT32-3PH	531357	RULETON3 115.00	531356	NSI TAP3 115.00	CKT 1	-4.1	1.00	-12.9	1.00
FLT33-3PH	531357	RULETON3 115.00	531368	LAWNRID3 115.00	CKT 1	-3.0	1.00	-13.4	1.00
FLT34-3PH	530554	ATWOOD 3 115.00	531364	ATWODSW3 115.00	CKT 1	3.6	1.00	-11.6	1.00
FLT35-3PH	530554	ATWOOD 3 115.00	531488	BVERVLLY 115.00	CKT 1	-3.9	1.00	-13.2	1.00
FLT36-3PH	531449	HOLCOMB7 345.00	523853	FINNEY 7345.00	CKT 1	-3.2	1.00	-1.6	1.00
FLT37-3PH	531449	HOLCOMB7 345.00	531501	BUCKNER7 345.00	CKT 1	-1.4	1.00	-7.2	1.00
FLT38-3PH	531449	HOLCOMB7 345.00	531448	HOLCOMB3 115.00	T/F	-3.6	1.00	-9.8	1.00
FLT39-3PH	640325	REDWILO3 345.00	640183	GENTLMN3 345.00	CKT 1	-4.6	1.00	-24.7	0.99
FLT40-3PH	640325	REDWILO3 345.00	640326	REDWILO7 115.00	T/F	-3.4	1.00	-12.6	1.00
FLT41-3PH	640183	GENTLMN3 345.00	640252	KEYSTON3 345.00	CKT 1	-4.2	1.00	-13.7	1.00
FLT42-3PH	640183	GENTLMN3 345.00	640374	SWEET W3 345.00	CKT 1	-3.1	1.00	-13.0	1.00

3. For 2015 winter case (GEN-2010-048 analysis): The maximum var generator supply is 1.9 MVARs at 1.0 (lagging power factor) for the outage of 531451 [MINGO 7 345.00] TO BUS 531429 [MINGO 3 115.00] T/F outage. The minimum var requirement is -17.6 MVAR at 0.97 (leading power factor) for outage of 560336 [G10-048-TAP 115.00] TO BUS 530557 [BEACH 3 115.00] CKT outage.
4. For 2015 winter case (GEN-2015-017 analysis): The maximum var generator supply is 22.5 MVARs at 0.99 (lagging power factor) for the outage of 531456 [NESSCTY3 115.00] TO BUS 531414 [RANSOM 3 115.00] CKT outage. The minimum var requirement is -19.3 MVAR at 0.99 (leading power factor) for outage of 640325 [REDWILO3 345.00] TO BUS 640183 [GENTLMN3 345.00] CKT outage.

Table 3.2.3: Var generator output in 2015 Winter peak case for DISIS-2015-001 (Group 04)

2015 Winter Peak Case Power Factor Study:

Generation Interconnection Request Analysis Rated MW of Wind Farms OR at POI (MW) Rated MVAR of Wind Farms OR at POI (MVAR)						GEN-2010-048 MW at POI **70.0** MVAR at POI **21.2**		GEN-2015-017 MW at POI **172** MVAR at POI **106.6**	
Cont. Name	**From Bus (# & Name)**		**To Bus (# & Name)**		**ID**	**MVAR at POI**	**P.F at POI**	**MVAR at POI**	**P.F at POI**
	Base Case MVAR Flow				N/A	-8.6	0.99	-7.2	1.00
FLT01-3PH	530582	S HAYS6 230.00	530584	POSTROCK6 230.00	CKT 1	-8.2	0.99	-6.8	1.00
FLT02-3PH	530558	KNOLL 6 230.00	530592	SMOKYHL6 230.00	CKT 1	-7.6	0.99	-6.2	1.00
FLT03-3PH	530561	KNOLL 3 115.00	530551	SALINE 3 115.00	CKT 1	-2.8	1.00	-5.9	1.00
FLT04-3PH	530561	KNOLL 3 115.00	530581	N HAYS3 115.00	CKT 1	-8.7	0.99	-7.0	1.00
FLT05-3PH	530561	KNOLL 3 115.00	530605	REDLIN 3 115.00	CKT 1	-5.1	1.00	-2.1	1.00
FLT06-3PH	531456	NESSCTY3 115.00	531414	RANSOM 3 115.00	CKT 1	-2.0	1.00	22.5	0.99
FLT07-3PH	531456	NESSCTY3 115.00	531359	BEELER 3 115.00	CKT 1	-8.4	0.99	-6.5	1.00
FLT08-3PH	530583	POSTROCK7 345.00	530584	POSTROCK6 230.00	T/F	-7.7	0.99	-2.8	1.00
FLT09-3PH	530558	KNOLL 6 230.00	530561	KNOLL 3 115.00	T/F	-6.7	1.00	-7.3	1.00
FLT10-3PH	560336	G10-048-TAP 115.00	530557	BEACH 3 115.00	CKT 1	-17.6	0.97	-5.9	1.00
FLT11-3PH	560336	G10-048-TAP 115.00	530605	REDLIN 3 115.00	CKT 1	-13.7	0.98	-2.0	1.00
FLT12-3PH	530557	BEACH 3 115.00	530556	HOXIE 3 115.00	CKT 1	-6.5	1.00	-1.9	1.00
FLT13-3PH	530557	BEACH 3 115.00	531386	GRHMSUB3 115.00	CKT 1	-8.6	0.99	-7.2	1.00
FLT14-3PH	530555	COLBY 3 115.00	530554	ATWOOD 3 115.00	CKT 1	-5.1	1.00	-2.6	1.00
FLT15-3PH	530555	COLBY 3 115.00	530682	SEGNTP 3 115.00	CKT 1	-9.1	0.99	-6.1	1.00
FLT16-3PH	530555	COLBY 3 115.00	531429	MINGO 3 115.00	CKT 1	-9.3	0.99	-13.3	1.00
FLT17-3PH	531429	MINGO 3 115.00	530559	PH RUN 3 115.00	CKT 1	-7.2	0.99	-9.3	1.00
FLT18-3PH	531429	MINGO 3 115.00	531351	BREWSTR3 115.00	CKT 1	-7.4	0.99	-5.3	1.00
FLT19-3PH	531451	MINGO 7 345.00	531429	MINGO 3 115.00	T/F	1.9	1.00	-16.7	1.00

Generation Interconnection Request Analysis Rated MW of Wind Farms OR at POI (MW) Rated MVAR of Wind Farms OR at POI (MVAR)						GEN-2010-048 MW at POI **70.0** MVAR at POI **21.2**		GEN-2015-017 MW at POI **172** MVAR at POI **106.6**	
Cont. Name	**From Bus (# & Name)**		**To Bus (# & Name)**		**ID**	**MVAR at POI**	**P.F at POI**	**MVAR at POI**	**P.F at POI**
FLT20-3PH	531451	MINGO 7 345.00	640325	REDWILO3 345.00	CKT 1	-2.4	1.00	17.3	0.99
FLT21-3PH	531451	MINGO 7 345.00	531465	SETAB 7 345.00	CKT 1	-10.3	0.99	-17.7	0.99
FLT22-3PH	531465	SETAB 7 345.00	531449	HOLCOMB7 345.00	CKT 1	-2.2	1.00	10.5	1.00
FLT23-3PH	531465	SETAB 7 345.00	531464	SETAB 3 115.00	T/F	-8.3	0.99	-6.3	1.00
FLT24-3PH	531373	RHOADES3 115.00	531372	NORCATR3 115.00	CKT 1	-8.7	0.99	-4.9	1.00
FLT25-3PH	531373	RHOADES3 115.00	531386	GRHMSUB3 115.00	CKT 1	-13.3	0.98	-5.6	1.00
FLT26-3PH	531373	RHOADES3 115.00	539685	PHLBURG3 115.00	CKT 1	-12.5	0.98	-7.3	1.00
FLT27-3PH	530558	KNOLL 6 230.00	530584	POSTROCK6 230.00	CKT 1	-8.9	0.99	-5.6	1.00
FLT28-3PH	530558	KNOLL 6 230.00	530592	SMOKYHL6 230.00	CKT 1	-7.6	0.99	-6.2	1.00
FLT29-3PH	530607	NESCTY 3 115.00	530606	ALXNDR 3 115.00	CKT 1	-6.4	1.00	4.9	1.00
FLT30-3PH	530559	PH RUN 3 115.00	530683	SEGUIN 3 115.00	CKT 1	-7.7	0.99	-4.3	1.00
FLT31-3PH	530559	PH RUN 3 115.00	531412	GRINNEL3 115.00	CKT 1	-9.1	0.99	-9.8	1.00
FLT32-3PH	531357	RULETON3 115.00	531356	NSI TAP3 115.00	CKT 1	-8.4	0.99	-6.1	1.00
FLT33-3PH	531357	RULETON3 115.00	531368	LAWNRID3 115.00	CKT 1	-7.8	0.99	-7.4	1.00
FLT34-3PH	530554	ATWOOD 3 115.00	531364	ATWODSW3 115.00	CKT 1	-4.3	1.00	-6.3	1.00
FLT35-3PH	530554	ATWOOD 3 115.00	531488	BVERVLLY 115.00	CKT 1	-7.9	0.99	-8.0	1.00
FLT36-3PH	531449	HOLCOMB7 345.00	523853	FINNEY 7345.00	CKT 1	-7.0	1.00	7.2	1.00
FLT37-3PH	531449	HOLCOMB7 345.00	531501	BUCKNER7 345.00	CKT 1	-5.4	1.00	-0.6	1.00
FLT38-3PH	531449	HOLCOMB7 345.00	531448	HOLCOMB3 115.00	T/F	-8.4	0.99	-9.9	1.00
FLT39-3PH	640325	REDWILO3 345.00	640183	GENTLMN3 345.00	CKT 1	-9.3	0.99	-19.3	0.99
FLT40-3PH	640325	REDWILO3 345.00	640326	REDWILO7 115.00	T/F	-7.7	0.99	-5.6	1.00
FLT41-3PH	640183	GENTLMN3 345.00	640252	KEYSTON3 345.00	CKT 1	-8.7	0.99	-7.1	1.00

Generation Interconnection Request Analysis Rated MW of Wind Farms OR at POI (MW) Rated MVAR of Wind Farms OR at POI (MVAR)						GEN-2010-048 MW at POI **70.0** MVAR at POI **21.2**		GEN-2015-017 MW at POI **172** MVAR at POI **106.6**	
Cont. Name	**From Bus (# & Name)**		**To Bus (# & Name)**		**ID**	**MVAR at POI**	**P.F at POI**	**MVAR at POI**	**P.F at POI**
FLT42-3PH	640183	GENTLMN3 345.00	640374	SWEET W3 345.00	CKT 1	-5.4	1.00	-6.9	1.00

5. For 2015 summer case (GEN-2010-048 analysis): The maximum var generator supply is 8.1 MVARs at 0.99 (lagging power factor) for the outage of 530561 [KNOLL 3 115.00] TO BUS 530551 [SALINE 3 115.00] CKT outage. The minimum var requirement is -24.4 MVAR at 0.94 (leading power factor) for outage of 560336 [G10-048-TAP 115.00] TO BUS 530557 [BEACH 3 115.00] CKT outage.
6. For 2015 summer case (GEN-2015-017 analysis): The maximum var generator supply is 16.3 MVARs at 0.99 (lagging power factor) for the outage of 531456 [NESSCTY3 115.00] TO BUS 531414 [RANSOM 3 115.00] CKT outage. The minimum var requirement is -20.9 MVAR at 0.99 (leading power factor) for outage of 640325 [REDWILO3 345.00] TO BUS 640183 [GENTLMN3 345.00] CKT outage.

Table 3.2.3: Var generator output in 2025 summer peak case for DISIS-2015-001 (Group 04)

2025 Summer Peak Case Power Factor Study:

Generation Interconnection Request Analysis Rated MW of Wind Farms OR at POI (MW) Rated MVAR of Wind Farms OR at POI (MVAR)						GEN-2010-048 MW at POI **70.0** MVAR at POI **21.2**		GEN-2015-017 MW at POI **155** MVAR at POI **96**	
Cont. Name	**From Bus (# & Name)**		**To Bus (# & Name)**		**ID**	**MVAR at POI**	**P.F at POI**	**MVAR at POI**	**P.F at POI**
	Base Case MVAR Flow				N/A	-3.1	1.00	-10.4	1.00
FLT01-3PH	530582	S HAYS6 230.00	530584	POSTROCK6 230.00	CKT 1	-3.0	1.00	-10.1	1.00
FLT02-3PH	530558	KNOLL 6 230.00	530592	SMOKYHL6 230.00	CKT 1	-2.8	1.00	-9.9	1.00
FLT03-3PH	530561	KNOLL 3 115.00	530551	SALINE 3 115.00	CKT 1	8.1	0.99	-4.5	1.00
FLT04-3PH	530561	KNOLL 3 115.00	530581	N HAYS3 115.00	CKT 1	-3.1	1.00	-10.1	1.00
FLT05-3PH	530561	KNOLL 3 115.00	530605	REDLIN 3 115.00	CKT 1	5.7	1.00	-6.3	1.00
FLT06-3PH	531456	NESSCTY3 115.00	531414	RANSOM 3 115.00	CKT 1	2.8	1.00	16.3	0.99
FLT07-3PH	531456	NESSCTY3 115.00	531359	BEELER 3 115.00	CKT 1	-3.0	1.00	-9.7	1.00
FLT08-3PH	530583	POSTROCK7 345.00	530584	POSTROCK6 230.00	T/F	-1.8	1.00	-7.3	1.00
FLT09-3PH	530558	KNOLL 6 230.00	530561	KNOLL 3 115.00	T/F	-2.6	1.00	-11.1	1.00

Generation Interconnection Request Analysis Rated MW of Wind Farms OR at POI (MW) Rated MVAR of Wind Farms OR at POI (MVAR)						GEN-2010-048 MW at POI **70.0** MVAR at POI **21.2**		GEN-2015-017 MW at POI **155** MVAR at POI **96**	
Cont. Name	**From Bus (# & Name)**		**To Bus (# & Name)**		**ID**	**MVAR at POI**	**P.F at POI**	**MVAR at POI**	**P.F at POI**
FLT10-3PH	560336	G10-048-TAP 115.00	530557	BEACH 3 115.00	CKT 1	-24.4	0.94	0.2	1.00
FLT11-3PH	560336	G10-048-TAP 115.00	530605	REDLIN 3 115.00	CKT 1	-5.2	1.00	-4.7	1.00
FLT12-3PH	530557	BEACH 3 115.00	530556	HOXIE 3 115.00	CKT 1	1.5	1.00	-6.7	1.00
FLT13-3PH	530557	BEACH 3 115.00	531386	GRHMSUB3 115.00	CKT 1	-3.1	1.00	-10.4	1.00
FLT14-3PH	530555	COLBY 3 115.00	530554	ATWOOD 3 115.00	CKT 1	3.2	1.00	-5.1	1.00
FLT15-3PH	530555	COLBY 3 115.00	530682	SEGNTP 3 115.00	CKT 1	-0.9	1.00	-9.3	1.00
FLT16-3PH	530555	COLBY 3 115.00	531429	MINGO 3 115.00	CKT 1	5.7	1.00	-12.2	1.00
FLT17-3PH	531429	MINGO 3 115.00	530559	PH RUN 3 115.00	CKT 1	0.5	1.00	-16.0	0.99
FLT18-3PH	531429	MINGO 3 115.00	531351	BREWSTR3 115.00	CKT 1	-2.2	1.00	-11.8	1.00
FLT19-3PH	531451	MINGO 7 345.00	531429	MINGO 3 115.00	T/F	1.8	1.00	14.5	1.00
FLT20-3PH	531451	MINGO 7 345.00	640325	REDWILO3 345.00	CKT 1	0.7	1.00	7.0	1.00
FLT21-3PH	531451	MINGO 7 345.00	531465	SETAB 7 345.00	CKT 1	-3.5	1.00	-8.8	1.00
FLT22-3PH	531465	SETAB 7 345.00	531449	HOLCOMB7 345.00	CKT 1	-0.5	1.00	-0.5	1.00
FLT23-3PH	531465	SETAB 7 345.00	531464	SETAB 3 115.00	T/F	-2.8	1.00	-11.6	1.00
FLT24-3PH	531373	RHOADES3 115.00	531372	NORCATR3 115.00	CKT 1	-3.7	1.00	-7.9	1.00
FLT25-3PH	531373	RHOADES3 115.00	531386	GRHMSUB3 115.00	CKT 1	-12.2	0.99	-7.2	1.00
FLT26-3PH	531373	RHOADES3 115.00	539685	PHLBURG3 115.00	CKT 1	-5.1	1.00	-9.9	1.00
FLT27-3PH	530558	KNOLL 6 230.00	530584	POSTROCK6 230.00	CKT 1	-2.6	1.00	-9.5	1.00
FLT28-3PH	530558	KNOLL 6 230.00	530592	SMOKYHL6 230.00	CKT 1	-2.8	1.00	-9.9	1.00
FLT29-3PH	530607	NESCTY 3 115.00	530606	ALXNDR 3 115.00	CKT 1	-1.5	1.00	-1.7	1.00
FLT30-3PH	530559	PH RUN 3 115.00	530683	SEGUIN 3 115.00	CKT 1	-0.8	1.00	-7.3	1.00
FLT31-3PH	530559	PH RUN 3 115.00	531412	GRINNEL3 115.00	CKT 1	-4.0	1.00	-14.9	1.00

Generation Interconnection Request Analysis Rated MW of Wind Farms OR at POI (MW) Rated MVAR of Wind Farms OR at POI (MVAR)						GEN-2010-048 MW at POI **70.0** MVAR at POI **21.2**		GEN-2015-017 MW at POI **155** MVAR at POI **96**	
Cont. Name	**From Bus (# & Name)**		**To Bus (# & Name)**		**ID**	**MVAR at POI**	**P.F at POI**	**MVAR at POI**	**P.F at POI**
FLT32-3PH	531357	RULETON3 115.00	531356	NSI TAP3 115.00	CKT 1	-3.6	1.00	-13.4	1.00
FLT33-3PH	531357	RULETON3 115.00	531368	LAWNRID3 115.00	CKT 1	-0.7	1.00	-9.6	1.00
FLT34-3PH	530554	ATWOOD 3 115.00	531364	ATWODSW3 115.00	CKT 1	5.2	1.00	-12.1	1.00
FLT35-3PH	530554	ATWOOD 3 115.00	531488	BVERVLLY 115.00	CKT 1	-2.3	1.00	-9.5	1.00
FLT36-3PH	531449	HOLCOMB7 345.00	523853	FINNEY 7345.00	CKT 1	-1.1	1.00	0.3	1.00
FLT37-3PH	531449	HOLCOMB7 345.00	531501	BUCKNER7 345.00	CKT 1	-0.5	1.00	-1.8	1.00
FLT38-3PH	531449	HOLCOMB7 345.00	531448	HOLCOMB3 115.00	T/F	-2.3	1.00	-5.4	1.00
FLT39-3PH	640325	REDWILO3 345.00	640183	GENTLMN3 345.00	CKT 1	-3.7	1.00	-20.9	0.99
FLT40-3PH	640325	REDWILO3 345.00	640326	REDWILO7 115.00	T/F	-2.7	1.00	-11.1	1.00
FLT41-3PH	640183	GENTLMN3 345.00	640252	KEYSTON3 345.00	CKT 1	-3.2	1.00	-10.9	1.00
FLT42-3PH	640183	GENTLMN3 345.00	640374	SWEET W3 345.00	CKT 1	-2.6	1.00	-11.1	1.00

3.3. Conclusions

The power factor analysis indicates the DISIS-2015-001 (Group 04) interconnection requests i.e., GEN-2010-048, and GEN-2015-017 are required to maintain the SPP standard power factor at the point of interconnection i.e., Tap on the Ross Beach to Redline 115kV line (560336), and Mingo 115kV (531429) based on the contingencies studied.

Per the SPP OATT, the Interconnection Customer will be required to provide 95% lagging (supplying vars) and 95% leading (absorbing vars) at the POI.

4. Inductive Reactive Support Analysis

Analysis for low wind/no wind conditions in cluster scenario is performed for the proposed wind generators requests. To offset the capacitive effects of the collector system and transmission line of the wind farm under low wind or no wind conditions, analysis was performed for winter-2015 scenario to calculate the Inductive Reactive Support at point of interconnection for each interconnection request under project DISIS-2015-001 (Group 04) .

Following methodology was adopted as communicated by SPP:

1. Switch the generator and capacitor bank (if installed) out of service with the collector system as modeled remaining in service.
2. Calculate the amount of inductive reactive support required at the 34.5kV collector buses which would result in zero VAR flow at the POI."

The inductive reactive support analysis for wind generator GEN-2010-048 performed for summer-2015 scenario which indicates that at POI i.e., Tap on the Ross Beach to Redline 115kV line (560336) 2.9 MVAR reactor is required at Bus 580062 to maintain zero MVAR flow for the GEN-2010-048 generator lead.

Maintaining zero MVar flow at the POI at all times is not possible with static reactor banks. It will be determined on a case by case basis for each generator as to whether additional reactor banks are required for low wind conditions.

The single line diagram for wind generators showing the inductive reactive requirement for Gen-2010-048 is shown in Figure 4.1.1:

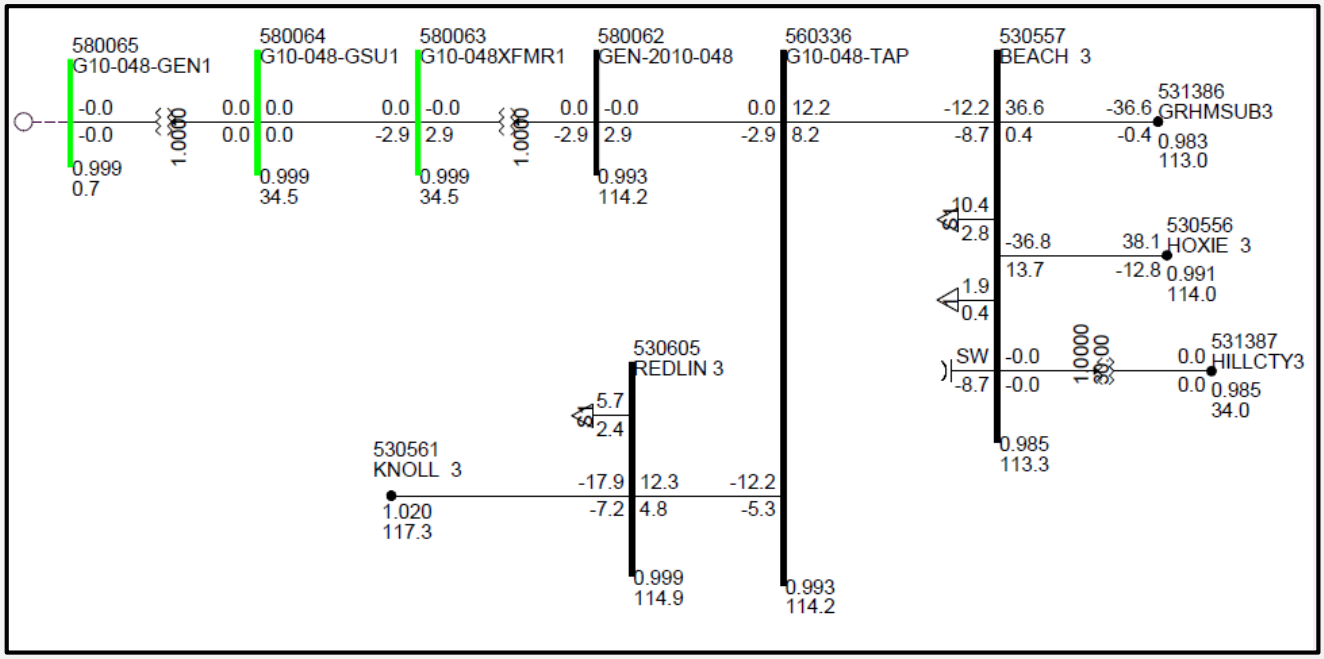

Figure 4.1.1: Inductive reactive requirement for GEN-2010-048

5. Short Circuit Analysis

The short circuit analysis out five buses away was performed for 2025 summer peak case for each interconnection request under project cluster scenario of DISIS-2015-001 (Group 04). No outage was assumed in the system model.

5.1. Short Circuit Result for POI Tap on the Ross Beach to Redline 115kV line (560336)

The results of the short circuit analysis for POI i.e., Tap on the Ross Beach to Redline 115kV line (560336) are tabulated below in table 5.1.1.

Table 5.1.1: Short circuit results for Tap on the Ross Beach to Redline 115kV line (560336)

Bus #	Bus Name	Level Away	Fault Current (Amperes)	
			3 PH	SLG
560336	G10-048-TAP 115.00	0 Level	4228.1	3342.4
530557	BEACH 3 115.00	1 Level	3400.6	3282.4
530605	REDLIN 3 115.00	1 Level	3741.8	2726.5
580062	GEN-2010-048115.00	1 Level	1433.4	937.4
530556	HOXIE 3 115.00	2 Level	1979.2	1300.2
530561	KNOLL 3 115.00	2 Level	4860.9	3762
531386	GRHMSUB3 115.00	2 Level	1582.5	1045.3
531387	HILLCTY3 34.500	2 Level	0	0
580063	G10-048XFMR134.500	2 Level	4778.2	3124.4
530551	SALINE 3 115.00	3 Level	506.8	498.9
530558	KNOLL 6 230.00	3 Level	1880.6	1555.4
530581	N HAYS3 115.00	3 Level	905.5	545.5
530629	KNLL1 1 11.490	3 Level	0	0
530676	GMEC 3 115.00	3 Level	1370.1	1251.7
530677	OGALATP3 115.00	3 Level	154.8	160.2
530682	SEGNTP 3 115.00	3 Level	1962.1	1263.8
531373	RHOADES3 115.00	3 Level	1672.1	1139.1
580064	G10-048-GSU134.500	3 Level	4751.2	3074.2
530555	COLBY 3 115.00	4 Level	1752.7	1318.6
530560	WKNNY 3 115.00	4 Level	144.3	148.2

Bus #	Bus Name	Level Away	Fault Current (Amperes)	
			3 PH	SLG
530584	POSTROCK6 230.00	4 Level	1272.2	1100.1
530590	BEMIS 3 115.00	4 Level	82.6	93
530591	VINE 3 115.00	4 Level	1002.3	636.3
530592	SMOKYHL6 230.00	4 Level	1457.4	1417.6
530674	GMECG1 1 13.800	4 Level	5601.6	5145.2
530675	GMECG2 1 13.800	4 Level	5820	5419.5
530683	SEGUIN 3 115.00	4 Level	1031.3	671.7
531366	CNORTON3 115.00	4 Level	0	0
531372	NORCATR3 115.00	4 Level	606.5	391.2
531492	OG ONEOK 115.00	4 Level	12	13.2
539685	PHLBURG3 115.00	4 Level	1164.7	835.1
539686	PLAINVL3 115.00	4 Level	519.1	488.5
579470	GEN-2008-092230.00	4 Level	991.6	986
580065	G10-048-GEN10.6600	4 Level	48353.8	160693.2
530554	ATWOOD 3 115.00	5 Level	792.1	605.2
530559	PH RUN 3 115.00	5 Level	1174	828.2
530562	HAYS 3 115.00	5 Level	1263.7	842.1
530582	S HAYS6 230.00	5 Level	1197.1	1072.5
530583	POSTROCK7 345.00	5 Level	1092.5	952.6
530593	SMKYP1 6 230.00	5 Level	508.6	504.2
530599	SMKYP2 6 230.00	5 Level	745.8	738.8
530644	COLBY 2 69.000	5 Level	266	225.6
530645	CLBYT1 1 13.800	5 Level	1293.8	1259.4
530673	POSTROCK1 13.800	5 Level	0	0
531429	MINGO 3 115.00	5 Level	2774.7	2214.2
531457	OBER T 3 115.00	5 Level	623.3	415.5
532873	SUMMIT 6 230.00	5 Level	1691.5	1696.2
539693	SMITH-C3 115.00	5 Level	894	607.2
539724	PHLBURG1 34.500	5 Level	667.6	799.2

Bus #	Bus Name	Level Away	Fault Current (Amperes)	
			3 PH	SLG
539725	PLAINVL1 34.500	5 Level	709.2	806.7
539927	PHLBUG-T 13.800	5 Level	0	0
539928	PLAINV-T 13.800	5 Level	0	0
579471	G08-092XFMR134.500	5 Level	3399.4	3381.2
579474	G08-092XFMR234.500	5 Level	3211.4	3191.8

5.2. Short Circuit Result for POI Mingo 115kV (531429)

The results of the short circuit analysis for POI i.e. Mingo 115kV (531429) are tabulated below in table 5.2.1.

Table 5.2.1: Short circuit results for Mingo 115kV (531429)

Bus #	Bus Name	Level Away	Fault Current (Amperes)	
			3 PH	SLG
531429	MINGO 3 115.00	0 Level	12465.1	12268.9
530555	COLBY 3 115.00	1 Level	2380.1	2294.2
530559	PH RUN 3 115.00	1 Level	1730	1480.6
531351	BREWSTR3 115.00	1 Level	875.3	721.6
531451	MINGO 7 345.00	1 Level	4431	3936.1
531452	MINGTER1 13.800	1 Level	0	0
584590	GEN-2015-017115.00	1 Level	7091.6	4734.4
530554	ATWOOD 3 115.00	2 Level	797.2	633.1
530644	COLBY 2 69.000	2 Level	718.4	498
530645	CLBYT1 1 13.800	2 Level	2942.6	2308.8
530682	SEGNTP 3 115.00	2 Level	1263.6	999.7
530683	SEGUIN 3 115.00	2 Level	442.7	418.2
531353	GOODLND3 115.00	2 Level	873.9	712.9
531412	GRINNEL3 115.00	2 Level	1332.5	1016.9
531465	SETAB 7 345.00	2 Level	2783.2	2523.7
584593	G15-017-GEN118.000	2 Level	45307	30247.6
640325	REDWILO3 345.00	2 Level	1969.5	1753.7

Bus #	Bus Name	Level Away	Fault Current (Amperes)	
			3 PH	SLG
530556	HOXIE 3 115.00	3 Level	1319.7	1024.5
530646	CLBY34 1 34.500	3 Level	1436.8	996
531259	SETAB 1 13.800	3 Level	0	0
531364	ATWODSW3 115.00	3 Level	753.8	553
531411	GOVE 3 115.00	3 Level	1336.3	1024.6
531443	GODLNDT3 115.00	3 Level	895	754.5
531449	HOLCOMB7 345.00	3 Level	2945.9	2645.8
531464	SETAB 3 115.00	3 Level	474.5	505.2
531488	BVERVLLY 115.00	3 Level	75.4	62
531609	WDCTWF-1 345.00	3 Level	955.7	957.1
640183	GENTLMN3 345.00	3 Level	3410.4	3217.7
640326	REDWILO7 115.00	3 Level	1975.3	2022.9
640327	REDWILO9 13.800	3 Level	0	0
523853	FINNEY 7345.00	4 Level	1568.2	1502.6
530557	BEACH 3 115.00	4 Level	1680.4	1366.8
530647	CLBY-DSL 13.000	4 Level	3812.8	2643
531220	HERNTAP3 115.00	4 Level	772.7	577.2
531357	RULETON3 115.00	4 Level	969.9	803
531369	NATWOOD3 115.00	4 Level	6.8	11
531409	ARNOLD3 115.00	4 Level	1795	1572.5
531416	CTYSERT3 115.00	4 Level	363.8	421.2
531433	SCOTCTY3 115.00	4 Level	645	547.4
531444	GOODCTY3 115.00	4 Level	29.6	62.8
531448	HOLCOMB3 115.00	4 Level	4073.6	4109.7
531450	HOLCTER1 13.800	4 Level	0	0
531487	MCDONLD3 115.00	4 Level	90.9	82.4
531489	ONEOK 3 115.00	4 Level	5.2	9
531501	BUCKNER7 345.00	4 Level	1473.8	1354.3
531610	WDCTWF-7 34.500	4 Level	3256.4	3257.8

Bus #	Bus Name	Level Away	Fault Current (Amperes)	
			3 PH	SLG
531998	HOLCOMB_2-ST22.000	4 Level	8001.6	8426.2
531999	HOLCOMB_1-CT18.000	4 Level	4723.2	6335.4
579427	G08-017XFMR234.500	4 Level	3151	3157
579428	G08-017XFMR334.500	4 Level	3151	3156.8
640011	GENTLM2G 24.000	4 Level	32848.4	34487.4
640082	BEVERLY7 115.00	4 Level	694.9	689.6
640184	GENTLMN4 230.00	4 Level	3183.1	3145.3
640185	G.GENT19 13.800	4 Level	0	0
640252	KEYSTON3 345.00	4 Level	796	768.5
640269	MCCOOK 7 115.00	4 Level	1241.8	1304.7
640365	STOCKVL7 115.00	4 Level	610.9	573.5
640374	SWEET W3 345.00	4 Level	1928	1935.8
640500	CHERRYC3 345.00	4 Level	567.6	561.2
643066	GENTLEMANT2913.800	4 Level	0	0
523097	HITCHLAND 7345.00	5 Level	2358.2	2297.2
523118	BUFF_DUNES 7345.00	5 Level	212	224.1
531256	SCOTCTY1 13.800	5 Level	0	0
531356	NSI TAP3 115.00	5 Level	891.2	672.7
531362	MANNGT 3 115.00	5 Level	319.3	288.3
531365	BIRDCTY3 115.00	5 Level	92.4	82.1
531367	HERNDON3 115.00	5 Level	766.5	561.8
531368	LAWNRID3 115.00	5 Level	122.7	129.3
531379	JONES3 115.00	5 Level	213.7	219.5
531386	GRHMSUB3 115.00	5 Level	424.3	474.1
531387	HILLCTY3 34.500	5 Level	0	0
531393	PLYMELL3 115.00	5 Level	1050.1	1056.1
531414	RANSOM 3 115.00	5 Level	1062.4	935.8
531418	CTYSERV3 115.00	5 Level	28.4	31
531420	FLETCHR3 115.00	5 Level	991.6	973.1

Bus #	Bus Name	Level Away	Fault Current (Amperes)	
			3 PH	SLG
531427	SCOTCTY2 69.000	5 Level	5.4	5.8
531432	PILE 3 115.00	5 Level	581.3	424.5
531445	GRDNCTY3 115.00	5 Level	1916.1	1873.7
531447	HOLCGEN1 22.000	5 Level	16872.2	18233.6
531469	SPERVIL7 345.00	5 Level	1613.2	1566.8
531485	CNTRLPL3 115.00	5 Level	1059.9	1107.9
531502	CIMRRN 7 345.00	5 Level	149.2	141.2
531504	CPV_CIMRRN 7345.00	5 Level	128.6	122.2
560336	G10-048-TAP 115.00	5 Level	1592.9	1244
579423	G08-017-GSU134.500	5 Level	3256.4	3257.8
579424	G08-017-GSU234.500	5 Level	3151	3157
579425	G08-017-GSU334.500	5 Level	3151	3156.8
580049	GEN-2010-045345.00	5 Level	148.2	140.2
584250	GEN-2014-041115.00	5 Level	1178.4	1156.6
599950	LAMAR7 345.00	5 Level	0	0
640010	GENTLM1G 23.000	5 Level	33402.4	34768
640017	MCCOOK G 13.800	5 Level	4893.6	4931.2
640065	AXTELL 3 345.00	5 Level	1459.9	1468.9
640083	BEVERLY8 69.000	5 Level	707.2	752.8
640100	CAMBRIG7 115.00	5 Level	643.7	605.8
640167	ENDERS 7 115.00	5 Level	608.4	573.9
640253	KEYSTON7 115.00	5 Level	1292.4	1320.3
640254	KEYSTON9 13.800	5 Level	0	0
640270	MCCOOK 8 69.000	5 Level	505.7	540.4
640286	N.PLATT4 230.00	5 Level	2666.4	2679
640287	N.PLATT7 115.00	5 Level	3538.3	3537.7
640302	OGALALA4 230.00	5 Level	688.2	689.9
640366	STOCKVL8 69.000	5 Level	759.7	794.3
640510	HOLT.CO3 345.00	5 Level	1031.5	1014.3

Bus #	Bus Name	Level Away	Fault Current (Amperes)	
			3 PH	SLG
643017	BEVERLY T1 913.800	5 Level	0	0
643018	BEVERLY T2 913.800	5 Level	0	0
643099	MCCOOK T1 913.800	5 Level	0	0
643100	MCCOOK T3 913.800	5 Level	0	0
643146	STOCKVLLET1913.800	5 Level	0	0
652571	GR ISLD3 345.00	5 Level	2187	2200.1
659133	SIDNEY 3 345.00	5 Level	1115	1106.2

6. Stability Analysis for Cluster Scenario

6.1. Faults Simulated

Forty Five (45) faults were considered for the transient stability simulations which included three phase faults, as well as single phase line faults, at the locations defined by SPP in the RFP. Single-phase line faults were simulated by applying fault impedance to the positive sequence network at the fault location. As per the SPP current practice to compute the fault levels, the fault impedance was computed to give a positive sequence voltage at the specified fault location of approximately 60% of pre-fault voltage.

Concurrently and previously queued projects as respectively shown in Table-1 and Table-2 of the study request i.e., GEN-2001-039M, GEN-2003-006A, GEN-2003-019, GEN-2006-031, GEN-2008-017, GEN-2008-092, GEN-2009-008, GEN-2009-020/GEN-2014-025, GEN-2010-057, ASGI-2013-004, GEN-2013-033, GEN-2014-041 as well as areas number 520, 524, 525, 526, 531, 534, 536, and 640 were monitored during all the simulations. Table 6.1.1 shows the list of simulated contingencies. This table also shows the fault clearing time and the time delay before re-closing for all the study contingencies.

Simulations were performed with a 0.1-second steady-state run followed by the appropriate disturbance as described in Table 6.1.1. Simulations were run for minimum 15-second duration to confirm proper machine damping.

Table 6.1.1 summarizes the overall results for all faults simulations of cluster scenario. Complete sets of plots for summer-2015, winter-2015, and summer-2025 peak seasons for each fault are included in Appendices A, B and C respectively.

Table 6.1.1: List of simulated faults for cluster scenario stability analysis

Cont. #	Contingency Name	Description	2015 Summer Results	2015 Winter Results	2025 Summer Results
1	FLT01-3PH	3 phase fault on South Hays 230kV (530582) to Post Rock 230KV (530584) CKT 1, near South Hays. a. Apply fault at the South Hays 230kV bus. b. Clear fault after 5 cycles by tripping the faulted line. c. Wait 20 cycles, and then re-close the line in (b) back into the fault. d. Leave fault on for 5 cycles, then trip the line in (b) and remove fault.	Stable	Stable	Stable
2	FLT02-3PH	3 phase fault on the Knoll 230kV (530558) to Smokey Hill 230V (530592) CKT 1, near Knoll. a. Apply fault at the Knoll 230kV bus. b. Clear fault after 5 cycles by tripping the faulted line. c. Wait 20 cycles, and then re-close the line in (b) back into the fault. d. Leave fault on for 5 cycles, then trip the line in (b) and remove fault.	Stable	Stable	Stable
3	FLT03-3PH	3 phase fault on the Knoll 115kV (530561) to Saline 115kV (530551) CKT 1, near Knoll. a. Apply fault at the Knoll 115kV bus. b. Clear fault after 5 cycles by tripping the faulted line. c. Wait 20 cycles, and then re-close the line in (b) back into the fault. d. Leave fault on for 5 cycles, then trip the line in (b) and remove fault.	Stable	Stable	Stable
4	FLT04-3PH	3 phase fault on the Knoll 115kV (530561) to North Hays 115kV (530581) CKT 1, near Knoll. a. Apply fault at the Knoll 115kV bus. b. Clear fault after 5 cycles by tripping the faulted line. c. Wait 20 cycles, and then re-close the line in (b) back into the fault. d. Leave fault on for 5 cycles, then trip the line in (b) and remove fault.	Stable	Stable	Stable
5	FLT05-3PH	3 phase fault on the Knoll 115kV (530561) to Redline 115kV (530605) CKT 1, near Knoll. a. Apply fault at the Knoll 115kV bus. b. Clear fault after 5 cycles by tripping the faulted line. c. Wait 20 cycles, and then re-close the line in (b) back into the fault. d. Leave fault on for 5 cycles, then trip the line in (b) and remove fault.	Stable	Stable	Stable

Cont. #	Contingency Name	Description	2015 Summer Results	2015 Winter Results	2025 Summer Results
6	FLT06-3PH	3 phase fault on the Ness City 115kV (531456) to Ransom 115kV (531414) CKT 1, near Ness City. a. Apply fault at the Ness City 115kV bus. b. Clear fault after 5 cycles by tripping the faulted line. c. Wait 20 cycles, and then re-close the line in (b) back into the fault. d. Leave fault on for 5 cycles, then trip the line in (b) and remove fault.	Stable	Stable	Stable
7	FLT07-3PH	3 phase fault on the Ness City 115kV (531456) to Beeler 115kV (531359) CKT 1, near Ness City. a. Apply fault at the Ness City 115kV bus. b. Clear fault after 5 cycles by tripping the faulted line. c. Wait 20 cycles, and then re-close the line in (b) back into the fault. d. Leave fault on for 5 cycles, then trip the line in (b) and remove fault.	Stable	Stable	Stable
8	FLT08-3PH	3 phase fault on the Post Rock 230KV (530584) to Post Rock 345kV (530583) to Post Rock 13.8kVkV (530673) XFMR CKT 1, near Post Rock 230 kV. a. Apply fault at the Post Rock 230kV bus. b. Clear fault after 5 cycles by tripping the faulted transformer.	Stable	Stable	Stable
9	FLT09-3PH	3 phase fault on the Knoll 230kV (530558) to Knoll 115kV (530561) to Knoll 11.49kV (530629) XFMR CKT 1, near Knoll 230 kV. a. Apply fault at the Knoll 230kV bus. b. Clear fault after 5 cycles by tripping the faulted transformer.	Stable	Stable	Stable
10	FLT10-3PH	3 phase fault on the G10-048 Tap 115kV (560336) to Beach 115kV (530557) CKT 1, near G10-048 Tap. a. Apply fault at the G10-048 Tap 115kV bus. b. Clear fault after 5 cycles by tripping the faulted line. c. Wait 20 cycles, and then re-close the line in (b) back into the fault. d. Leave fault on for 5 cycles, then trip the line in (b) and remove fault.	Stable	Stable	Stable

Cont. #	Contingency Name	Description	2015 Summer Results	2015 Winter Results	2025 Summer Results
11	FLT11-3PH	3 phase fault on the G10-048 Tap 115kV (560336) to Redline 115kV (530605) CKT 1, near G10-048 Tap. a. Apply fault at the G10-048 Tap 115kV bus. b. Clear fault after 5 cycles by tripping the faulted line. c. Wait 20 cycles, and then re-close the line in (b) back into the fault. d. Leave fault on for 5 cycles, then trip the line in (b) and remove fault.	Stable	Stable	Stable
12	FLT12-3PH	3 phase fault on the Beach 115kV (530557) to Hoxie 115kV (530556) CKT 1, near Beach. a. Apply fault at the Beach 115kV bus. b. Clear fault after 5 cycles by tripping the faulted line. c. Wait 20 cycles, and then re-close the line in (b) back into the fault. d. Leave fault on for 5 cycles, then trip the line in (b) and remove fault.	Stable	Stable	Stable
13	FLT13-3PH	3 phase fault on the Beach 115kV (530557) to Graham 115kV (531386) CKT 1, near Beach. a. Apply fault at the Beach 115kV bus. b. Clear fault after 5 cycles by tripping the faulted line. c. Wait 20 cycles, and then re-close the line in (b) back into the fault. d. Leave fault on for 5 cycles, then trip the line in (b) and remove fault.	Stable	Stable	Stable
14	FLT14-3PH	3 phase fault on the Colby 115kV (530555) to Atwood 115kV (530554) CKT 1, near Colby. a. Apply fault at the Colby 115kV bus. b. Clear fault after 5 cycles by tripping the faulted line. c. Wait 20 cycles, and then re-close the line in (b) back into the fault. d. Leave fault on for 5 cycles, then trip the line in (b) and remove fault.	Stable	Stable	Stable
15	FLT15-3PH	3 phase fault on the Colby 115kV (530555) to Seguin Tap 115kV (530682) CKT 1, near Colby. a. Apply fault at the Colby 115kV bus. b. Clear fault after 5 cycles by tripping the faulted line. c. Wait 20 cycles, and then re-close the line in (b) back into the fault. d. Leave fault on for 5 cycles, then trip the line in (b) and remove fault.	Stable	Stable	Stable

Cont. #	Contingency Name	Description	2015 Summer Results	2015 Winter Results	2025 Summer Results
16	FLT16-3PH	3 phase fault on the Colby 115kV (530555) to Mingo 115kV (531429) CKT 1, near Colby. a. Apply fault at the Colby 115kV bus. b. Clear fault after 5 cycles by tripping the faulted line. c. Wait 20 cycles, and then re-close the line in (b) back into the fault. d. Leave fault on for 5 cycles, then trip the line in (b) and remove fault.	Stable	Stable	Stable
17	FLT17-3PH	3 phase fault on the Mingo 115kV (531429) to Pheasant Run 115kV (530559) CKT 1, near Mingo. a. Apply fault at the Mingo 115kV bus. b. Clear fault after 5 cycles by tripping the faulted line. c. Wait 20 cycles, and then re-close the line in (b) back into the fault. d. Leave fault on for 5 cycles, then trip the line in (b) and remove fault.	Stable	Stable	Stable
18	FLT18-3PH	3 phase fault on the Mingo 115kV (531429) to Brewster 115kV (531351) CKT 1, near Mingo. a. Apply fault at the Mingo 115kV bus. b. Clear fault after 5 cycles by tripping the faulted line. c. Wait 20 cycles, and then re-close the line in (b) back into the fault. d. Leave fault on for 5 cycles, then trip the line in (b) and remove fault.	Stable	Stable	Stable
19	FLT19-3PH	3 phase fault on the Mingo 115kV (531429) to Mingo 345kV (531451) to Mingo 13.8kV (531452) XFMR CKT 1, near Mingo 115kV. a. Apply fault at the Mingo 115kV bus. b. Clear fault after 5 cycles by tripping the faulted transformer.	Stable	Stable	Stable
20	FLT20-3PH	3 phase fault on the Mingo 345kV (531451) to Red Willow 345kV (640325) CKT 1, near Mingo. a. Apply fault at the Mingo 345kV bus. b. Clear fault after 5 cycles by tripping the faulted line. c. Wait 20 cycles, and then re-close the line in (b) back into the fault. d. Leave fault on for 5 cycles, then trip the line in (b) and remove fault.	Stable	Stable	Stable

Cont. #	Contingency Name	Description	2015 Summer Results	2015 Winter Results	2025 Summer Results
21	FLT21-3PH	3 phase fault on the Mingo 345kV (531451) to Setab 345kV (531465) CKT 1, near Mingo. a. Apply fault at the Mingo 345kV bus. b. Clear fault after 5 cycles by tripping the faulted line. c. Wait 20 cycles, and then re-close the line in (b) back into the fault. d. Leave fault on for 5 cycles, then trip the line in (b) and remove fault.	Stable	Stable	Stable
22	FLT22-3PH	3 phase fault on the Setab 345kV (531465) to Holcomb 345kV (531449) CKT 1, near Setab. a. Apply fault at the Setab 345kV bus. b. Clear fault after 5 cycles by tripping the faulted line. c. Wait 20 cycles, and then re-close the line in (b) back into the fault. d. Leave fault on for 5 cycles, then trip the line in (b) and remove fault.	Stable	Stable	Stable
23	FLT23-3PH	3 phase fault on the Setab 345kV (531465) to Setab 115kV (531464) to Setab 13.8kV (531259) XFMR CKT 1, near Setab 345kV. a. Apply fault at the Setab 345kV bus. b. Clear fault after 5 cycles by tripping the faulted transformer.	Stable	Stable	Stable
24	FLT24-3PH	3 phase fault on the Rhoades 115kV (531373) to Norcatr 115kV (531372) CKT 1, near Rhoades. a. Apply fault at the Rhoades 115kV bus. b. Clear fault after 5 cycles by tripping the faulted line. c. Wait 20 cycles, and then re-close the line in (b) back into the fault. d. Leave fault on for 5 cycles, then trip the line in (b) and remove fault.	Stable	Stable	Stable
25	FLT25-3PH	3 phase fault on the Rhoades 115kV (531373) to Graham 115kV (531386) CKT 1, near Rhoades. a. Apply fault at the Rhoades 115kV bus. b. Clear fault after 5 cycles by tripping the faulted line. c. Wait 20 cycles, and then re-close the line in (b) back into the fault. d. Leave fault on for 5 cycles, then trip the line in (b) and remove fault.	Stable	Stable	Stable

Cont. #	Contingency Name	Description	2015 Summer Results	2015 Winter Results	2025 Summer Results
26	FLT26-3PH	3 phase fault on the Rhoades 115kV (531373) to Phillipsburg 115kV (539685) CKT 1, near Rhoades. a. Apply fault at the Rhoades 115kV bus. b. Clear fault after 5 cycles by tripping the faulted line. c. Wait 20 cycles, and then re-close the line in (b) back into the fault. d. Leave fault on for 5 cycles, then trip the line in (b) and remove fault.	Stable	Stable	Stable
27	FLT27-3PH	3 phase fault on the Knoll 230kV (530558) to Postrock 230kV (530584) CKT 1, near Knoll. a. Apply fault at the Knoll 230kV bus. b. Clear fault after 5 cycles by tripping the faulted line. c. Wait 20 cycles, and then re-close the line in (b) back into the fault. d. Leave fault on for 5 cycles, then trip the line in (b) and remove fault.	Stable	Stable	Stable
28	FLT28-3PH	3 phase fault on the Knoll 230kV (530558) to Smoky Hill 230kV (530592) CKT 1, near Knoll. a. Apply fault at the Knoll 230kV bus. b. Clear fault after 5 cycles by tripping the faulted line. c. Wait 20 cycles, and then re-close the line in (b) back into the fault. d. Leave fault on for 5 cycles, then trip the line in (b) and remove fault.	Stable	Stable	Stable
29	FLT29-3PH	3 phase fault on the Ness City 115kV (530607) to Alexander 115kV (530606) CKT 1, near Ness City. a. Apply fault at the Ness City 115kV bus. b. Clear fault after 5 cycles by tripping the faulted line. c. Wait 20 cycles, and then re-close the line in (b) back into the fault. d. Leave fault on for 5 cycles, then trip the line in (b) and remove fault.	Stable	Stable	Stable
30	FLT30-3PH	3 phase fault on the Pheasant Run 115kV (530559) to Seguin 115kV (530683) CKT 1, near Pheasant Run. a. Apply fault at the Pheasant Run 115kV bus. b. Clear fault after 5 cycles by tripping the faulted line. c. Wait 20 cycles, and then re-close the line in (b) back into the fault. d. Leave fault on for 5 cycles, then trip the line in (b) and remove fault.	Stable	Stable	Stable

Cont. #	Contingency Name	Description	2015 Summer Results	2015 Winter Results	2025 Summer Results
31	FLT31-3PH	3 phase fault on the Pheasant Run 115kV (530559) to Grinnel 115kV (531412) CKT 1, near Pheasant Run. a. Apply fault at the Pheasant Run 115kV bus. b. Clear fault after 5 cycles by tripping the faulted line. c. Wait 20 cycles, and then re-close the line in (b) back into the fault. d. Leave fault on for 5 cycles, then trip the line in (b) and remove fault.	Stable	Stable	Stable
32	FLT32-3PH	3 phase fault on the Ruleton 115kV (531357) to NSI Tap 115kV (531356) CKT 1, near Ruleton. a. Apply fault at the Ruleton 115kV bus. b. Clear fault after 5 cycles by tripping the faulted line. c. Wait 20 cycles, and then re-close the line in (b) back into the fault. d. Leave fault on for 5 cycles, then trip the line in (b) and remove fault.	Stable	Stable	Stable
33	FLT33-3PH	3 phase fault on the Ruleton 115kV (531357) to Lawn Ridge 115kV (531368) CKT 1, near Ruleton. a. Apply fault at the Ruleton 115kV bus. b. Clear fault after 5 cycles by tripping the faulted line. c. Wait 20 cycles, and then re-close the line in (b) back into the fault. d. Leave fault on for 5 cycles, then trip the line in (b) and remove fault.	Stable	Stable	Stable
34	FLT34-3PH	3 phase fault on the Atwood 115kV (530554) to Atwood SW 115kV (531364) CKT 1, near Atwood. a. Apply fault at the Atwood 115kV bus. b. Clear fault after 5 cycles by tripping the faulted line. c. Wait 20 cycles, and then re-close the line in (b) back into the fault. d. Leave fault on for 5 cycles, then trip the line in (b) and remove fault.	Stable	Stable	Stable
35	FLT35-3PH	3 phase fault on the Atwood 115kV (530554) to Beaver Valley 115kV (531488) CKT 1, near Atwood. a. Apply fault at the Atwood 115kV bus. b. Clear fault after 5 cycles by tripping the faulted line. c. Wait 20 cycles, and then re-close the line in (b) back into the fault. d. Leave fault on for 5 cycles, then trip the line in (b) and remove fault.	Stable	Stable	Stable

Cont. #	Contingency Name	Description	2015 Summer Results	2015 Winter Results	2025 Summer Results
36	FLT36-3PH	3 phase fault on the Holcomb 345kV (531449) to Finney 345kV (523853) CKT 1, near Holcomb. a. Apply fault at the Holcomb 345kV bus. b. Clear fault after 5 cycles by tripping the faulted line. c. Wait 20 cycles, and then re-close the line in (b) back into the fault. d. Leave fault on for 5 cycles, then trip the line in (b) and remove fault.	Stable	Stable	Stable
37	FLT37-3PH	3 phase fault on the Holcomb 345kV (531449) to Buckner 345kV (531501) CKT 1, near Holcomb. a. Apply fault at the Holcomb 345kV bus. b. Clear fault after 5 cycles by tripping the faulted line. c. Wait 20 cycles, and then re-close the line in (b) back into the fault. d. Leave fault on for 5 cycles, then trip the line in (b) and remove fault.	Stable	Stable	Stable
38	FLT38-3PH	3 phase fault on the Holcomb 345kV (531449) to Holcomb 115kV (531448) to Holcomb 13.8kV (531450) XFMR CKT 1, near Holcomb 345kV. a. Apply fault at the Holcomb 345kV bus. b. Clear fault after 5 cycles by tripping the faulted transformer.	Stable	Stable	Stable
39	FLT39-3PH	3 phase fault on the Red Willow 345kV (640325) to Gentleman 345kV (640183) CKT 1, near Red Willow. a. Apply fault at the Red Willow 345kV bus. b. Clear fault after 5 cycles by tripping the faulted line. c. Wait 20 cycles, and then re-close the line in (b) back into the fault. d. Leave fault on for 5 cycles, then trip the line in (b) and remove fault.	Stable	Stable	Stable
40	FLT40-3PH	3 phase fault on the Red Willow 345kV (640325) to Red Willow 115kV (640326) to Red Willow 13.8kV (640327) XFMR CKT 1, near Red Willow 345kV. a. Apply fault at the Red Willow 345kV bus. b. Clear fault after 5 cycles by tripping the faulted transformer.	Stable	Stable	Stable

Cont. #	Contingency Name	Description	2015 Summer Results	2015 Winter Results	2025 Summer Results
41	FLT41-3PH	3 phase fault on the Gentleman 345kV (640183) to Keystone 345kV (640252) CKT 1, near Gentleman. a. Apply fault at the Gentleman 345kV bus. b. Clear fault after 5 cycles by tripping the faulted line. c. Wait 20 cycles, and then re-close the line in (b) back into the fault. d. Leave fault on for 5 cycles, then trip the line in (b) and remove fault.	Stable	Stable	Stable
42	FLT42-3PH	3 phase fault on the Gentleman 345kV (640183) to Sweetwater 345kV (640374) CKT 1, near Gentleman. a. Apply fault at the Gentleman 345kV bus. b. Clear fault after 5 cycles by tripping the faulted line. c. Wait 20 cycles, and then re-close the line in (b) back into the fault. d. Leave fault on for 5 cycles, then trip the line in (b) and remove fault.	Stable	Stable	Stable
43	FLT43-PO	**Prior Outage of Knoll to N Hays 115kV**. 3 phase fault on the Ross Beach to GEN-2010-048 Tap 115kV. a. Prior outage Knoll (530561) 115kV to N Hays (530581) 115kV (solve network for steady state solution). b. 3 phase fault on the Ross Beach (530557) 115kV to GEN-2010-048 Tap (560336) 115kV, near Ross Beach 115kV. c. Leave fault on for 5 cycles, then trip the faulted line in (b).	Stable	Stable	Stable
44	FLT44-SB	**Knoll 115kV Stuck Breaker** a. Apply single phase fault at the Knoll (530561) 115kV bus on the Knoll – Red Line (530605) 115kV line. b. Wait 16 cycles, and then drop Knoll (530558) 230kV to Knoll (530561) 115kV (530629) 11.49kV transformer. c. Trip Knoll to Red Line 115kV and remove the fault.	Stable	Stable	Stable
45	FLT45-SB	**Mingo 115kV Stuck Breaker** a. Apply single phase fault at the Mingo (531429)115kV bus on the Mingo – Brewster (531351) 115kV line. b. Wait 16 cycles, and then trip Mingo (531429) to Brewster (531351) 115kV. c. Trip Mingo (531429) to Colby (530555) 115kV and remove the fault.	Stable	Stable	Stable

6.2. Simulation Results for Cluster Scenario

For cluster scenario, there are no impacts on the stability performance of the SPP system for the contingencies tested on the SPP provided base cases.

7. Stability Analysis for Stand-Alone Scenarios

For stand-alone scenario, selective contingencies are simulated for each interconnection request at 100% capacity of each generator at the POI.

7.1. Fault Simulated for GEN-2010-048 Request

Table 7.1.1, summarizes the overall results for all simulations for GEN-2010-048 request. Complete sets of plots for summer-2015, winter-2015, and summer-2025 peak seasons for each fault for GEN-2010-048 are in Appendices E1, E2, and E3 respectively.

Table 7.1.1: List of simulated faults for stand-alone stability analysis (GEN-2010-048)

Cont. #	Contingency Name	Description	2015 Summer Results	2015 Winter Results	2025 Summer Results
1	FLT01-3PH	3 phase fault on South Hays 230kV (530582) to Post Rock 230KV (530584) CKT 1, near South Hays. a. Apply fault at the South Hays 230kV bus. b. Clear fault after 5 cycles by tripping the faulted line. c. Wait 20 cycles, and then re-close the line in (b) back into the fault. d. Leave fault on for 5 cycles, then trip the line in (b) and remove fault.	Stable	Stable	Stable
2	FLT02-3PH	3 phase fault on the Knoll 230kV (530558) to Smokey Hill 230V (530592) CKT 1, near Knoll. a. Apply fault at the Knoll 230kV bus. b. Clear fault after 5 cycles by tripping the faulted line. c. Wait 20 cycles, and then re-close the line in (b) back into the fault. d. Leave fault on for 5 cycles, then trip the line in (b) and remove fault.	Stable	Stable	Stable
3	FLT03-3PH	3 phase fault on the Knoll 115kV (530561) to Saline 115kV (530551) CKT 1, near Knoll. a. Apply fault at the Knoll 115kV bus. b. Clear fault after 5 cycles by tripping the faulted line. c. Wait 20 cycles, and then re-close the line in (b) back into the fault. d. Leave fault on for 5 cycles, then trip the line in (b) and remove fault.	Stable	Stable	Stable

Cont. #	Contingency Name	Description	2015 Summer Results	2015 Winter Results	2025 Summer Results
4	FLT04-3PH	3 phase fault on the Knoll 115kV (530561) to North Hays 115kV (530581) CKT 1, near Knoll. a. Apply fault at the Knoll 115kV bus. b. Clear fault after 5 cycles by tripping the faulted line. c. Wait 20 cycles, and then re-close the line in (b) back into the fault. d. Leave fault on for 5 cycles, then trip the line in (b) and remove fault.	Stable	Stable	Stable
5	FLT05-3PH	3 phase fault on the Knoll 115kV (530561) to Redline 115kV (530605) CKT 1, near Knoll. a. Apply fault at the Knoll 115kV bus. b. Clear fault after 5 cycles by tripping the faulted line. c. Wait 20 cycles, and then re-close the line in (b) back into the fault. d. Leave fault on for 5 cycles, then trip the line in (b) and remove fault.	Stable	Stable	Stable
8	FLT08-3PH	3 phase fault on the Post Rock 230KV (530584) to Post Rock 345kV (530583) to Post Rock 13.8kVkV (530673) XFMR CKT 1, near Post Rock 230 kV. a. Apply fault at the Post Rock 230kV bus. b. Clear fault after 5 cycles by tripping the faulted transformer.	Stable	Stable	Stable
9	FLT09-3PH	3 phase fault on the Knoll 230kV (530558) to Knoll 115kV (530561) to Knoll 11.49kV (530629) XFMR CKT 1, near Knoll 230 kV. a. Apply fault at the Knoll 230kV bus. b. Clear fault after 5 cycles by tripping the faulted transformer.	Stable	Stable	Stable
10	FLT10-3PH	3 phase fault on the G10-048 Tap 115kV (560336) to Beach 115kV (530557) CKT 1, near G10-048 Tap. a. Apply fault at the G10-048 Tap 115kV bus. b. Clear fault after 5 cycles by tripping the faulted line. c. Wait 20 cycles, and then re-close the line in (b) back into the fault. d. Leave fault on for 5 cycles, then trip the line in (b) and remove fault.	Stable	Stable	Stable

Cont. #	Contingency Name	Description	2015 Summer Results	2015 Winter Results	2025 Summer Results
11	FLT11-3PH	3 phase fault on the G10-048 Tap 115kV (560336) to Redline 115kV (530605) CKT 1, near G10-048 Tap. a. Apply fault at the G10-048 Tap 115kV bus. b. Clear fault after 5 cycles by tripping the faulted line. c. Wait 20 cycles, and then re-close the line in (b) back into the fault. d. Leave fault on for 5 cycles, then trip the line in (b) and remove fault.	Stable	Stable	Stable
12	FLT12-3PH	3 phase fault on the Beach 115kV (530557) to Hoxie 115kV (530556) CKT 1, near Beach. a. Apply fault at the Beach 115kV bus. b. Clear fault after 5 cycles by tripping the faulted line. c. Wait 20 cycles, and then re-close the line in (b) back into the fault. d. Leave fault on for 5 cycles, then trip the line in (b) and remove fault.	Stable	Stable	Stable
13	FLT13-3PH	3 phase fault on the Beach 115kV (530557) to Graham 115kV (531386) CKT 1, near Beach. a. Apply fault at the Beach 115kV bus. b. Clear fault after 5 cycles by tripping the faulted line. c. Wait 20 cycles, and then re-close the line in (b) back into the fault. d. Leave fault on for 5 cycles, then trip the line in (b) and remove fault.	Stable	Stable	Stable
14	FLT14-3PH	3 phase fault on the Colby 115kV (530555) to Atwood 115kV (530554) CKT 1, near Colby. a. Apply fault at the Colby 115kV bus. b. Clear fault after 5 cycles by tripping the faulted line. c. Wait 20 cycles, and then re-close the line in (b) back into the fault. d. Leave fault on for 5 cycles, then trip the line in (b) and remove fault.	Stable	Stable	Stable
15	FLT15-3PH	3 phase fault on the Colby 115kV (530555) to Seguin Tap 115kV (530682) CKT 1, near Colby. a. Apply fault at the Colby 115kV bus. b. Clear fault after 5 cycles by tripping the faulted line. c. Wait 20 cycles, and then re-close the line in (b) back into the fault. d. Leave fault on for 5 cycles, then trip the line in (b) and remove fault.	Stable	Stable	Stable

Cont. #	Contingency Name	Description	2015 Summer Results	2015 Winter Results	2025 Summer Results
16	FLT16-3PH	3 phase fault on the Colby 115kV (530555) to Mingo 115kV (531429) CKT 1, near Colby. a. Apply fault at the Colby 115kV bus. b. Clear fault after 5 cycles by tripping the faulted line. c. Wait 20 cycles, and then re-close the line in (b) back into the fault. d. Leave fault on for 5 cycles, then trip the line in (b) and remove fault.	Stable	Stable	Stable
20	FLT20-3PH	3 phase fault on the Mingo 345kV (531451) to Red Willow 345kV (640325) CKT 1, near Mingo. a. Apply fault at the Mingo 345kV bus. b. Clear fault after 5 cycles by tripping the faulted line. c. Wait 20 cycles, and then re-close the line in (b) back into the fault. d. Leave fault on for 5 cycles, then trip the line in (b) and remove fault.	Stable	Stable	Stable
24	FLT24-3PH	3 phase fault on the Rhoades 115kV (531373) to Norcatr 115kV (531372) CKT 1, near Rhoades. a. Apply fault at the Rhoades 115kV bus. b. Clear fault after 5 cycles by tripping the faulted line. c. Wait 20 cycles, and then re-close the line in (b) back into the fault. d. Leave fault on for 5 cycles, then trip the line in (b) and remove fault.	Stable	Stable	Stable
25	FLT25-3PH	3 phase fault on the Rhoades 115kV (531373) to Graham 115kV (531386) CKT 1, near Rhoades. a. Apply fault at the Rhoades 115kV bus. b. Clear fault after 5 cycles by tripping the faulted line. c. Wait 20 cycles, and then re-close the line in (b) back into the fault. d. Leave fault on for 5 cycles, then trip the line in (b) and remove fault.	Stable	Stable	Stable
26	FLT26-3PH	3 phase fault on the Rhoades 115kV (531373) to Phillipsburg 115kV (539685) CKT 1, near Rhoades. a. Apply fault at the Rhoades 115kV bus. b. Clear fault after 5 cycles by tripping the faulted line. c. Wait 20 cycles, and then re-close the line in (b) back into the fault. d. Leave fault on for 5 cycles, then trip the line in (b) and remove fault.	Stable	Stable	Stable

Cont. #	Contingency Name	Description	2015 Summer Results	2015 Winter Results	2025 Summer Results
27	FLT27-3PH	3 phase fault on the Knoll 230kV (530558) to Postrock 230kV (530584) CKT 1, near Knoll. a. Apply fault at the Knoll 230kV bus. b. Clear fault after 5 cycles by tripping the faulted line. c. Wait 20 cycles, and then re-close the line in (b) back into the fault. d. Leave fault on for 5 cycles, then trip the line in (b) and remove fault.	Stable	Stable	Stable
28	FLT28-3PH	3 phase fault on the Knoll 230kV (530558) to Smoky Hill 230kV (530592) CKT 1, near Knoll. a. Apply fault at the Knoll 230kV bus. b. Clear fault after 5 cycles by tripping the faulted line. c. Wait 20 cycles, and then re-close the line in (b) back into the fault. d. Leave fault on for 5 cycles, then trip the line in (b) and remove fault.	Stable	Stable	Stable
43	FLT43-PO	**Prior Outage of Knoll to N Hays 115kV**. 3 phase fault on the Ross Beach to GEN-2010-048 Tap 115kV. a. Prior outage Knoll (530561) 115kV to N Hays (530581) 115kV (solve network for steady state solution). b. 3 phase fault on the Ross Beach (530557) 115kV to GEN-2010-048 Tap (560336) 115kV, near Ross Beach 115kV. c. Leave fault on for 5 cycles, then trip the faulted line in (b).	Stable	Stable	Stable
44	FLT44-SB	**Knoll 115kV Stuck Breaker** a. Apply single phase fault at the Knoll (530561) 115kV bus on the Knoll – Red Line (530605) 115kV line. b. Wait 16 cycles, and then drop Knoll (530558) 230kV to Knoll (530561) 115kV (530629) 11.49kV transformer. c. Trip Knoll to Red Line 115kV and remove the fault.	Stable	Stable	Stable

Note: For stand-alone scenario GEN-2010-048, the other requested machine GEN-2015-017 was out of service and therefore GEN-2015-017 is reflected in the plots of appendix E1, E2, and E3

7.2. Fault Simulated for GEN-2015-017 Request

Table 7.2.1, summarizes the overall results for all simulations for GEN-2015-017 request. Complete sets of plots for summer-2015, winter-2015, and summer-2025 peak seasons for each fault for GEN-2015-017 are in Appendices F1, F2, and F3 respectively.

Table 7.2.1: List of simulated faults for stability analysis (GEN-2015-017)

Cont. #	Contingency Name	Description	2015 Summer Results	2015 Winter Results	2025 Summer Results
6	FLT06-3PH	3 phase fault on the Ness City 115kV (531456) to Ransom 115kV (531414) CKT 1, near Ness City. a. Apply fault at the Ness City 115kV bus. b. Clear fault after 5 cycles by tripping the faulted line. c. Wait 20 cycles, and then re-close the line in (b) back into the fault. d. Leave fault on for 5 cycles, then trip the line in (b) and remove fault.	Stable	Stable	Stable
7	FLT07-3PH	3 phase fault on the Ness City 115kV (531456) to Beeler 115kV (531359) CKT 1, near Ness City. a. Apply fault at the Ness City 115kV bus. b. Clear fault after 5 cycles by tripping the faulted line. c. Wait 20 cycles, and then re-close the line in (b) back into the fault. d. Leave fault on for 5 cycles, then trip the line in (b) and remove fault.	Stable	Stable	Stable
12	FLT12-3PH	3 phase fault on the Beach 115kV (530557) to Hoxie 115kV (530556) CKT 1, near Beach. a. Apply fault at the Beach 115kV bus. b. Clear fault after 5 cycles by tripping the faulted line. c. Wait 20 cycles, and then re-close the line in (b) back into the fault. d. Leave fault on for 5 cycles, then trip the line in (b) and remove fault.	Stable	Stable	Stable
14	FLT14-3PH	3 phase fault on the Colby 115kV (530555) to Atwood 115kV (530554) CKT 1, near Colby. a. Apply fault at the Colby 115kV bus. b. Clear fault after 5 cycles by tripping the faulted line. c. Wait 20 cycles, and then re-close the line in (b) back into the fault. d. Leave fault on for 5 cycles, then trip the line in (b) and remove fault.	Stable	Stable	Stable
15	FLT15-3PH	3 phase fault on the Colby 115kV (530555) to Seguin Tap 115kV (530682) CKT 1, near Colby. a. Apply fault at the Colby 115kV bus. b. Clear fault after 5 cycles by tripping the faulted line. c. Wait 20 cycles, and then re-close the line in (b) back into the fault. d. Leave fault on for 5 cycles, then trip the line in (b) and remove fault.	Stable	Stable	Stable

Cont. #	Contingency Name	Description	2015 Summer Results	2015 Winter Results	2025 Summer Results
16	FLT16-3PH	3 phase fault on the Colby 115kV (530555) to Mingo 115kV (531429) CKT 1, near Colby. a. Apply fault at the Colby 115kV bus. b. Clear fault after 5 cycles by tripping the faulted line. c. Wait 20 cycles, and then re-close the line in (b) back into the fault. d. Leave fault on for 5 cycles, then trip the line in (b) and remove fault.	Stable	Stable	Stable
17	FLT17-3PH	3 phase fault on the Mingo 115kV (531429) to Pheasant Run 115kV (530559) CKT 1, near Mingo. a. Apply fault at the Mingo 115kV bus. b. Clear fault after 5 cycles by tripping the faulted line. c. Wait 20 cycles, and then re-close the line in (b) back into the fault. d. Leave fault on for 5 cycles, then trip the line in (b) and remove fault.	Stable	Stable	Stable
18	FLT18-3PH	3 phase fault on the Mingo 115kV (531429) to Brewster 115kV (531351) CKT 1, near Mingo. a. Apply fault at the Mingo 115kV bus. b. Clear fault after 5 cycles by tripping the faulted line. c. Wait 20 cycles, and then re-close the line in (b) back into the fault. d. Leave fault on for 5 cycles, then trip the line in (b) and remove fault.	Stable	Stable	Stable
19	FLT19-3PH	3 phase fault on the Mingo 115kV (531429) to Mingo 345kV (531451) to Mingo 13.8kV (531452) XFMR CKT 1, near Mingo 115kV. a. Apply fault at the Mingo 115kV bus. b. Clear fault after 5 cycles by tripping the faulted transformer.	Stable	Stable	Stable
20	FLT20-3PH	3 phase fault on the Mingo 345kV (531451) to Red Willow 345kV (640325) CKT 1, near Mingo. a. Apply fault at the Mingo 345kV bus. b. Clear fault after 5 cycles by tripping the faulted line. c. Wait 20 cycles, and then re-close the line in (b) back into the fault. d. Leave fault on for 5 cycles, then trip the line in (b) and remove fault.	Stable	Stable	Stable

Cont. #	Contingency Name	Description	2015 Summer Results	2015 Winter Results	2025 Summer Results
21	FLT21-3PH	3 phase fault on the Mingo 345kV (531451) to Setab 345kV (531465) CKT 1, near Mingo. a. Apply fault at the Mingo 345kV bus. b. Clear fault after 5 cycles by tripping the faulted line. c. Wait 20 cycles, and then re-close the line in (b) back into the fault. d. Leave fault on for 5 cycles, then trip the line in (b) and remove fault.	Stable	Stable	Stable
22	FLT22-3PH	3 phase fault on the Setab 345kV (531465) to Holcomb 345kV (531449) CKT 1, near Setab. a. Apply fault at the Setab 345kV bus. b. Clear fault after 5 cycles by tripping the faulted line. c. Wait 20 cycles, and then re-close the line in (b) back into the fault. d. Leave fault on for 5 cycles, then trip the line in (b) and remove fault.	Stable	Stable	Stable
23	FLT23-3PH	3 phase fault on the Setab 345kV (531465) to Setab 115kV (531464) to Setab 13.8kV (531259) XFMR CKT 1, near Setab 345kV. a. Apply fault at the Setab 345kV bus. b. Clear fault after 5 cycles by tripping the faulted transformer.	Stable	Stable	Stable
29	FLT29-3PH	3 phase fault on the Ness City 115kV (530607) to Alexander 115kV (530606) CKT 1, near Ness City. a. Apply fault at the Ness City 115kV bus. b. Clear fault after 5 cycles by tripping the faulted line. c. Wait 20 cycles, and then re-close the line in (b) back into the fault. d. Leave fault on for 5 cycles, then trip the line in (b) and remove fault.	Stable	Stable	Stable
30	FLT30-3PH	3 phase fault on the Pheasant Run 115kV (530559) to Seguin 115kV (530683) CKT 1, near Pheasant Run. a. Apply fault at the Pheasant Run 115kV bus. b. Clear fault after 5 cycles by tripping the faulted line. c. Wait 20 cycles, and then re-close the line in (b) back into the fault. d. Leave fault on for 5 cycles, then trip the line in (b) and remove fault.	Stable	Stable	Stable

Cont. #	Contingency Name	Description	2015 Summer Results	2015 Winter Results	2025 Summer Results
31	FLT31-3PH	3 phase fault on the Pheasant Run 115kV (530559) to Grinnel 115kV (531412) CKT 1, near Pheasant Run. a. Apply fault at the Pheasant Run 115kV bus. b. Clear fault after 5 cycles by tripping the faulted line. c. Wait 20 cycles, and then re-close the line in (b) back into the fault. d. Leave fault on for 5 cycles, then trip the line in (b) and remove fault.	Stable	Stable	Stable
32	FLT32-3PH	3 phase fault on the Ruleton 115kV (531357) to NSI Tap 115kV (531356) CKT 1, near Ruleton. a. Apply fault at the Ruleton 115kV bus. b. Clear fault after 5 cycles by tripping the faulted line. c. Wait 20 cycles, and then re-close the line in (b) back into the fault. d. Leave fault on for 5 cycles, then trip the line in (b) and remove fault.	Stable	Stable	Stable
33	FLT33-3PH	3 phase fault on the Ruleton 115kV (531357) to Lawn Ridge 115kV (531368) CKT 1, near Ruleton. a. Apply fault at the Ruleton 115kV bus. b. Clear fault after 5 cycles by tripping the faulted line. c. Wait 20 cycles, and then re-close the line in (b) back into the fault. d. Leave fault on for 5 cycles, then trip the line in (b) and remove fault.	Stable	Stable	Stable
34	FLT34-3PH	3 phase fault on the Atwood 115kV (530554) to Atwood SW 115kV (531364) CKT 1, near Atwood. a. Apply fault at the Atwood 115kV bus. b. Clear fault after 5 cycles by tripping the faulted line. c. Wait 20 cycles, and then re-close the line in (b) back into the fault. d. Leave fault on for 5 cycles, then trip the line in (b) and remove fault.	Stable	Stable	Stable
35	FLT35-3PH	3 phase fault on the Atwood 115kV (530554) to Beaver Valley 115kV (531488) CKT 1, near Atwood. a. Apply fault at the Atwood 115kV bus. b. Clear fault after 5 cycles by tripping the faulted line. c. Wait 20 cycles, and then re-close the line in (b) back into the fault. d. Leave fault on for 5 cycles, then trip the line in (b) and remove fault.	Stable	Stable	Stable

Cont. #	Contingency Name	Description	2015 Summer Results	2015 Winter Results	2025 Summer Results
36	FLT36-3PH	3 phase fault on the Holcomb 345kV (531449) to Finney 345kV (523853) CKT 1, near Holcomb. a. Apply fault at the Holcomb 345kV bus. b. Clear fault after 5 cycles by tripping the faulted line. c. Wait 20 cycles, and then re-close the line in (b) back into the fault. d. Leave fault on for 5 cycles, then trip the line in (b) and remove fault.	Stable	Stable	Stable
37	FLT37-3PH	3 phase fault on the Holcomb 345kV (531449) to Buckner 345kV (531501) CKT 1, near Holcomb. a. Apply fault at the Holcomb 345kV bus. b. Clear fault after 5 cycles by tripping the faulted line. c. Wait 20 cycles, and then re-close the line in (b) back into the fault. d. Leave fault on for 5 cycles, then trip the line in (b) and remove fault.	Stable	Stable	Stable
38	FLT38-3PH	3 phase fault on the Holcomb 345kV (531449) to Holcomb 115kV (531448) to Holcomb 13.8kV (531450) XFMR CKT 1, near Holcomb 345kV. a. Apply fault at the Holcomb 345kV bus. b. Clear fault after 5 cycles by tripping the faulted transformer.	Stable	Stable	Stable
39	FLT39-3PH	3 phase fault on the Red Willow 345kV (640325) to Gentleman 345kV (640183) CKT 1, near Red Willow. a. Apply fault at the Red Willow 345kV bus. b. Clear fault after 5 cycles by tripping the faulted line. c. Wait 20 cycles, and then re-close the line in (b) back into the fault. d. Leave fault on for 5 cycles, then trip the line in (b) and remove fault.	Stable	Stable	Stable
40	FLT40-3PH	3 phase fault on the Red Willow 345kV (640325) to Red Willow 115kV (640326) to Red Willow 13.8kV (640327) XFMR CKT 1, near Red Willow 345kV. a. Apply fault at the Red Willow 345kV bus. b. Clear fault after 5 cycles by tripping the faulted transformer.	Stable	Stable	Stable

Cont. #	Contingency Name	Description	2015 Summer Results	2015 Winter Results	2025 Summer Results
41	FLT41-3PH	3 phase fault on the Gentleman 345kV (640183) to Keystone 345kV (640252) CKT 1, near Gentleman. a. Apply fault at the Gentleman 345kV bus. b. Clear fault after 5 cycles by tripping the faulted line. c. Wait 20 cycles, and then re-close the line in (b) back into the fault. d. Leave fault on for 5 cycles, then trip the line in (b) and remove fault.	Stable	Stable	Stable
42	FLT42-3PH	3 phase fault on the Gentleman 345kV (640183) to Sweetwater 345kV (640374) CKT 1, near Gentleman. a. Apply fault at the Gentleman 345kV bus. b. Clear fault after 5 cycles by tripping the faulted line. c. Wait 20 cycles, and then re-close the line in (b) back into the fault. d. Leave fault on for 5 cycles, then trip the line in (b) and remove fault.	Stable	Stable	Stable
45	FLT45-SB	**Mingo 115kV Stuck Breaker** a. Apply single phase fault at the Mingo (531429)115kV bus on the Mingo – Brewster (531351) 115kV line. b. Wait 16 cycles, and then trip Mingo (531429) to Brewster (531351) 115kV. c. Trip Mingo (531429) to Colby (530555) 115kV and remove the fault.	Stable	Stable	Stable

Note: For stand-alone scenario GEN-2015-017, the other requested machine GEN-2010-048 was out of service and therefore GEN-2010-048 is reflected in the plots of Appendices F1, F2, and F3

7.3.Simulation Results for Stand-Alone Scenarios

There are no impacts on the stability performance for stand-alone scenarios of the SPP system for the contingencies tested on the SPP provided base cases.

8. Conclusions

The findings of the impact study for the proposed interconnection projects under DISIS-2015-001 (Group 04) considered 100% of their proposed installed capacity is as follows:

1. The power factor analysis indicates the DISIS-2015-001 (Group 04) interconnection requests i.e., GEN-2010-048, and GEN-2015-017 are required to maintain the SPP standard power factor at the point of interconnection i.e., Tap on the Ross Beach to Redline 115kV line (560336), and Mingo 115kV (531429) based on the contingencies studied. Per the SPP OATT, the Interconnection Customer will be required to provide 95% lagging (supplying vars) and 95% leading (absorbing vars) at the POI

2. The inductive reactive support analysis for wind generator GEN-2010-048 performed for summer-2015 scenario which indicates that at POI i.e., Tap on the Ross Beach to Redline 115kV line (560336) 2.9 MVAR reactor is required at Bus 580062 to maintain zero MVAR flow for the GEN-2010-048 generator lead. Maintaining zero MVar flow at the POI at all times is not possible with static reactor banks. It will be determined on a case by case basis for each generator as to whether additional reactor banks are required for low wind conditions.

3. The short circuit analysis is performed on the power flow models for the 2025 summer peak season for cluster scenario model. The results are documented for both 3 phase fault as well as single line to ground fault up to 5 buses away from the POI i.e., Tap on the Ross Beach to Redline 115kV line (560336), and Mingo 115kV (531429).

4. There are no impacts on the stability performance of the SPP system during both cluster and stand-alone scenarios for the contingencies tested on the provided base cases. The study machines stayed on-line and stable for all simulated faults. The Project stability simulations with forty five (45) specified test disturbances did not show instability problems in the SPP system. Any oscillations were damped out.

9. **Appendix A:2015 Summer Peak Case Stability Run Plots – Cluster**

10. **Appendix B:2015 Winter Peak Case Stability Run Plots – Cluster**

11. **Appendix C:2025 Summer Peak Case Stability Run Plots – Cluster**

12. **Appendix D:Project Model Data**

13. **Appendix E1: 2015 Summer Peak Case Stability Run Plots for GEN-2010-048 Stand-Alone Scenario**

14. **Appendix E2: 2015 Winter Peak Case Stability Run Plots for GEN-2010-048 Stand-Alone Scenario**

15. **Appendix E3: 2025 Summer Peak Case Stability Run Plots for GEN-2010-048 Stand-Alone Scenario**

16. **Appendix F1: 2015 Summer Peak Case Stability Run Plots for GEN-2015-017 Stand-Alone Scenario**

17. **Appendix F2: 2015 Winter Peak Case Stability Run Plots for GEN-2015-017 Stand-Alone Scenario**

18. **Appendix F3: 2025 Summer Peak Case Stability Run Plots for GEN-2015-017 Stand-Alone Scenario**

N: Group 5 Dynamic Stability Analysis Report

See Quanta report next page

DISIS 2015-001

GROUP 5

DEFINITIVE INTERCONNECTION SYSTEM IMPACT STUDY

August 28, 2015

Submitted To:
Southwest Power Pool, Inc.
201 Worthen Drive
Little Rock, AR 72223

Submitted By **Quanta Technology, LLC**
A Division of Quanta Services (NYSE:PWR)
4020 Westchase Boulevard, Suite 300
Raleigh, NC 27607

Contacts: **Robert Haas**
rhaas@quanta-technology.com
Phone: (331) 457-2368

Ed Pfeiffer
epfeiffer@quanta-technology.com
Phone: (919) 334-3054
www.quanta-technology.com

CONFIDENTIAL/PROPRIETARY: This document contains trade secrets and/or proprietary, commercial, or financial information not generally available to the public. It is considered privileged and proprietary to the Offeror, and is submitted by Quanta Technology LLC. in confidence with the understanding that its contents are specifically exempted from disclosure under the Freedom of Information Act [5 USC Section 552 (b) (4)] and shall not be disclosed by the recipient [whether it be Government (local, state, federal, or foreign), private industry, or non-profit organization] and shall not be duplicated, used, or disclosed, in whole or in part, for any purpose except to the extent in which portions of the information contained in this document are required to permit evaluation of this document, without the expressed written consent of the Offeror. If a contract is awarded to this Offeror as a result of, or in connection with, the submission of this data, the right to duplicate, use, or disclose the data is granted to the extent provided in the contract.

EXECUTIVE SUMMARY

The Southwest Power Pool (SPP), on behalf of generation interconnection customers, desires a definitive interconnection system impact study for a gas turbine installation in the Texas panhandle (Deaf Smith County), known as Group 5. Group 5 consists of the following:

- GEN-2014-068 – 196 MW summer/203 MW winter combustion turbine plant connected to the 230kV at a tap on the Deaf Smith-Plant X line (Southwestern Public Service)

There are 4 previously queued generators in Group 5.

- GEN-2002-022 – 240 MW wind farm connected at Bushland 230kV (Southwestern Public Service)
- GEN-2008-051 – 322 MW wind farm connected at Potter 345kV (Southwestern Public Service)
- ASGI-2013-001 – 11.5 MW wind farm connected at Pan Tex South 115kV (Southwestern Public Service)
- GEN-2014-040 – 349 MW wind farm connected at Castro 115kV (Southwestern Public Service)

SPP requested a stability analysis for the queued generation project in Group 5. In addition, SPP requested fault current analysis for the queued generator project in Group 5. SPP did not request an Available Transfer Capability (ATC) study as part of this study.

- GEN-2014-068 will be required to maintain the standard pro-forma power factor requirement of 0.95 leading (absorbing) to 0.95 lagging (supplying) at the point of interconnection.
- For the Summer 2015 study case, the out of step relay on the SPS-AEPW Wheeler-Sweetwater 230 kV line tripped for some of the Potter County faults. This tripping occurred with or without the GEN-2014-068 study generation, and this tripping did not take any generation down with it. The settings of the out-of-step relay will need to be examined.
- GEN-2014-068 did not trip offline under any of the studied fault conditions.
- GEN-2014-068 met the Rotor Angle Damping Requirement.
- GEN-2014-068 POI voltage met the Transient Voltage Recovery Requirement. The post-fault voltage did not deviate outside the 0.7 – 1.2 pu window after fault clearing, and the steady-state POI voltage recovered to near pre-fault levels for all studied faults.
- All generators in the monitored areas remained stable for all of the modelled disturbances. (However, see previous note regarding Wheeler-Sweetwater 230 kV out of step relay tripping in selected cases.)

TABLE OF CONTENTS

PAGE

Contents

1. INTRODUCTION 1
2. STUDY METHODOLOGY 2
2.1 POWER FACTOR ANALYSIS 2
2.2 DYNAMIC ANALYSIS 2
3. PROJECT DESCRIPTION 4
4. POWER FACTOR RESULTS 7
5. TRANSIENT STABILITY RESULTS 7
6. ROTOR ANGLE DAMPING AND VOLTAGE RECOVERY REQUIREMENT 8
7. FAULT CURRENT ANALYSIS 12
8. CONCLUSIONS 17
APPENDIX 1 18

Tables

Table 2-1: Description of Study Areas 2
Table 2-2: Fault Descriptions 3
Table 3-1: Point of Interconnection for Group 5 4
Table 3-2: GEN-2014-068 real and reactive dispatch 6
Table 5-1: GEN-2014-040 reactive output to prevent oscillation 8
Table 6-1: GEN-2014-068 POI post-fault voltage recovery 11
Table 7-1: Fault Currents 12

Figures

Figure 3-1: Geographical Location of Group 5 Projects 5
Figure 3-2: GEN-2014-068 One-Line Diagram 6
Figure 6-3: GEN-2014-068 rotor angle, FLT02-3PH, Summer 2025 9
Figure 6-4: GEN-2014-068 POI voltage, FLT01-3PH, Winter 2015 10

1. INTRODUCTION

The Southwest Power Pool (hereafter referred to as SPP) commissioned Quanta Technology to study the a gas turbine installations in the SPP interconnection queue referred to as Group 5. The site studied, GEN-2014-068, is in the Texas panhandle in Deaf Smith county

The sites studied were:

- GEN-2014-068 – 196 MW summer/203 MW winter combustion turbine plant connected to the 230kV at a tap on the Deaf Smith-Plant X line (Southwestern Public Service)

The study included four prior queued projects:

- GEN-2002-022 – 240 MW wind farm connected at Bushland 230kV (Southwestern Public Service)
- GEN-2008-051 – 322 MW wind farm connected at Potter 345kV (Southwestern Public Service)
- ASGI-2013-001 – 11.5 MW wind farm connected at Pan Tex South 115kV (Southwestern Public Service)
- GEN-2014-040 – 349 MW wind farm connected at Castro 115kV (Southwestern Public Service)

SPP did not request an Available Transfer Capability (ATC) study.

SPP requested a stability analysis for the generation in Group 5. Quanta Technology performed a dynamics study utilizing SPP's list of faults as follows:

1. Determined the ability of the generators to remain in synchronism following three phase faults, for the above interconnection on-line.

2. Performed a fault current study for transmission buses within 5 buses of GEN-2014-068. This fault study was performed with all of the above studied units online simultaneously.

The results of the study are given in the following sections.

2. STUDY METHODOLOGY

SPP provided 2015 summer peak and 2015 winter peak and 2025 summer peak load flow cases in PSS/E format. Table 2-1 below shows the total demand and generation in the monitored areas.

Table 2-1: Description of Study Areas

Area #	Area Name	2015 Summer Peak		2015 Winter Peak		2025 Summer Peak	
		Load (MW)	Generation (MW)	Load (MW)	Generation (MW)	Load (MW)	Generation (MW)
520	AEPW	10,412.9	9,357.1	8,382.6	7,095.7	11,252.9	9,874.6
524	OKGE	6,013.9	7,473.8	4,141.2	5,428.8	6,354.0	8,030.6
525	WFEC	1,543.5	1,278.9	1,426.6	1,121.2	1,776.7	1,378.5
526	SPS	6,361.4	7,284.1	4,606.2	5,525.2	8,429.9	8,618.5
531	MIDW	387.6	311.2	284.1	244.5	420.8	314.4
534	SUNC	1,311.7	1,831.2	884.2	1,378.0	1,343.3	2090.3
536	WERE	6,188.8	5,831.0	4,254.3	4,308.4	6,869.0	6,520.1

2.1 POWER FACTOR ANALYSIS

DISIS 2015-001 Group 5 does not contain any renewable resources. As such, no Power Factor analysis was included in the scope of work.

2.2 DYNAMIC ANALYSIS

The study areas shown in Table 2-1 were monitored in the dynamic analysis.

The transmission line and transformer faults were simulated and synchronous machine rotor angles and wind turbine generator electrical power outputs were monitored to check whether synchronism is maintained and oscillations are damped following fault removal. Bus voltages were also monitored to ensure voltage recovery following fault removal.

Line faults were simulated with or without reclosing, depending on the fault. All clearing times were 5.0 cycles except for the Plant X and Deaf Smith stuck breaker faults FLT35-SB and FLT36-SB which had a clearing time of 14.5 cycles. Transformer faults and stuck breaker faults were not reclosed.

Unless otherwise noted, all faults had a clearing time of 5 cycles and a reclosing time of 20 cycles. That is, the fault sequence is:

a. Apply fault
b. Open faulted line and clear fault after 5 cycles

c. Wait 20 cycles, reclose line opened in step b, and reapply fault
d. Open faulted line and clear fault after 5 cycles.

If a normally cleared fault is described with "No reclosing", the fault sequence is:

a. Apply fault
b. Open faulted transmission element and clear fault after 5 cycles

Table 2-4 gives detailed descriptions of all the studied faults. **In all cases, the fault is applied to the first specified bus. All studied faults are 3φ faults except for the stuck breaker faults FLT35-SB and FLT36-SB which are 1φ faults.**

Table 2-2: Fault Descriptions

Cont. No.	Description
FLT01	Outage the GEN-2014-068 Tap (560016) to Deaf Smith (524623) 230kV line circuit 1
FLT02	Outage the GEN-2014-068 Tap (560016) to Plant X (525481) 230kV line circuit 1
FLT03	Outage the DS #21 (524734) to Deaf Smith (524622) 115kV line circuit 1
FLT04	Outage the Deaf Smith (524622) to NE_Hereford (524567) 115kV line circuit 1
FLT05	Outage the Deaf Smith (524622) to Panda (524597) 115kV line circuit 1
FLT06	Outage the Deaf Smith (524622) to Hereford (524606) 115kV line circuit 1
FLT07	Outage the BC-Earth (525056) to Plant X (525480) 115kV line circuit 1
FLT08	Outage the Plant X (525480) to EMU&VLY_TP (525019) 115kV line circuit 1 (Winter 2015 and Summer 2025 only)
FLT09	Outage the Plant X (525480) to Bailey County (525028) 115kV line circuit 1 (Summer 2015 only)
FLT10	Outage the Plant X (525480) to LC-S_Olton (525440) 115kV line circuit 1
FLT11	Outage the Plant X (525480) to Hale County (525454) 115kV line circuit 1
FLT12	Outage the Plant X (525480) to W_LITLFLD (525614) 115kV line circuit 1 (Summer 2025 only)
FLT13	Outage the Plant X (525480) to Lamb County (525636) 115kV line circuit 1 (Summer 2015 and Winter 2015 only)
FLT14	Outage the Potter County (523959) to Moore County (523309) 230kV line circuit 1
FLT15	Outage the Potter County (523959) to Channing (523869) 230kV line circuit 1 (Winter 2015 and Summer 2025 only)
FLT16	Outage the Potter County (523959) to Harrington East (523979) 230kV line circuit 1

Cont. No.	Description
FLT17	Outage the Potter County (523959) to Rolling Hills (524010) 230kV line circuit 1
FLT18	Outage the Potter County (523959) to Bushland (524267) 230kV line circuit 1
FLT19	Outage the Potter County (523961) to G14-038T (560011) 345kV line ckt 1
FLT19A	Outage on the G14-038T (560011) to Hitchland (523097) 345kV line ckt 1
FLT20	Outage the Nichols (524044) to Grapevine (523771) 230kV line circuit 1
FLT21	Outage the Grapevine (523771) to Wheeler (523777) 230kV line circuit 1
FLT22	Outage the Newhart (525461) to Swisher (525213) 230kV line circuit 1
FLT23	Outage the Newhart (525461) to Plant X (525481) 230kV line circuit 1
FLT24	Outage the Swisher (525213) to Tuco (525830) 230kV line circuit 1
FLT25	Outage the Plant X (525481) to Tolk East (525524) 230kV line circuit 2
FLT26	Outage the Plant X (525481) to Tolk West (525531) 230kV line circuit 1
FLT27	Outage the Plant X (525481) to Sundown (526435) 230kV line circuit 1
FLT28	Outage the Deaf Smith (524623) to Bushland (524267) 230kV line circuit 1
FLT29	Outage the Deaf Smith (524623) 230/(524622) 115/(524620) 13.2kV Transformer circuit 1
FLT30	Outage the Newhart (525461) 230/(525460) 115/(525459) 13.2kV Transformer circuit 1
FLT31	Outage the Plant X (525481) 230/(525480) 115/(525479) 13.2kV Transformer circuit 1
FLT32	Outage the Tuco (525830) 230kV /(525832) 345kV /(525825) 13.2kV Transformer circuit 1
FLT33	Outage the Tuco (525832) to GEN-2014-074 Tap (560027) 345kV line circuit 1
FLT34	Outage the Tuco (525832) to Border (515458) 345kV line circuit 1
FLT35SB	**Single phase fault with stuck breaker** on the Plant X (525481) to G14-068-Tap (560016) 230kV line, near Plant X
FLT36SB	**Single phase fault with stuck breaker** on the Deaf Smith (524623) to G14-068-Tap (560016) 230kV line, near Deaf Smith.

FERC Order 661A (Low Voltage Ride Through) compliance was not included in this analysis as there were no wind farms in Group 5.

3. PROJECT DESCRIPTION

Following is a table of the proposed generator in Group 5.

Table 3-1: Point of Interconnection for Group 5

Request	Size (MW)	Model	Point Of Interconnection		
			Common Name	Bus #	Name in Model
GEN-2014-068	196 summer 203 winter	GE 7FA Natural Gas combustion turbine	Tap Deaf Smith-Plant X 230 kV line	560016	G14-068-TAP 230

As illustrated below, the study interconnection is in the Texas panhandle. GEN-2014-068 is in Deaf Smith County.

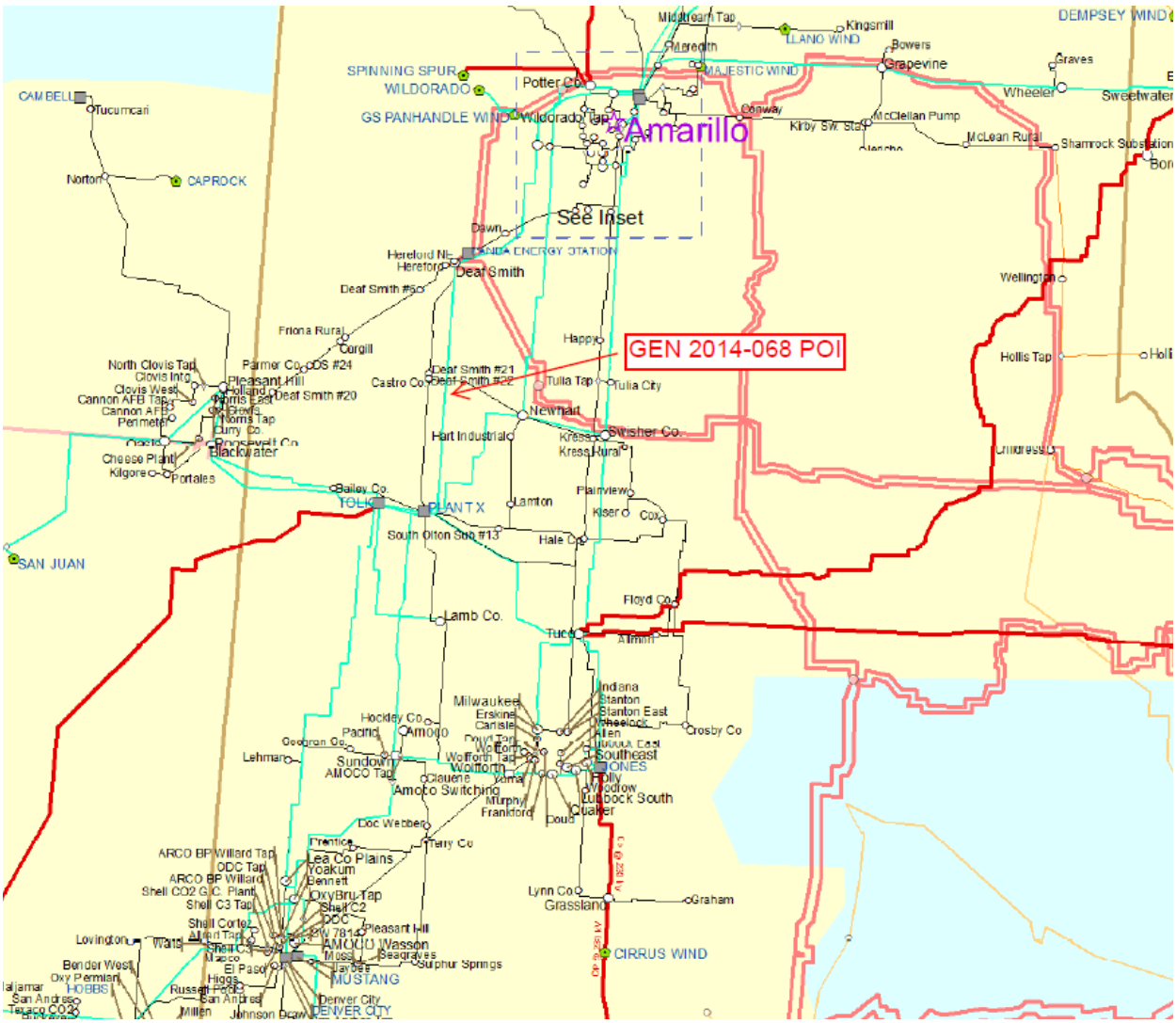

Figure 3-1: Geographical Location of Group 5 Projects

One-line diagram of the studied interconnections are shown below. All voltages and line flows are from the 2015 summer peak base case. The one-line diagrams use this following color code for nominal voltages:

Red	**345 kV**
Blue	**230 kV**
Black	**115 kV**
Purple	**Lower voltage levels**

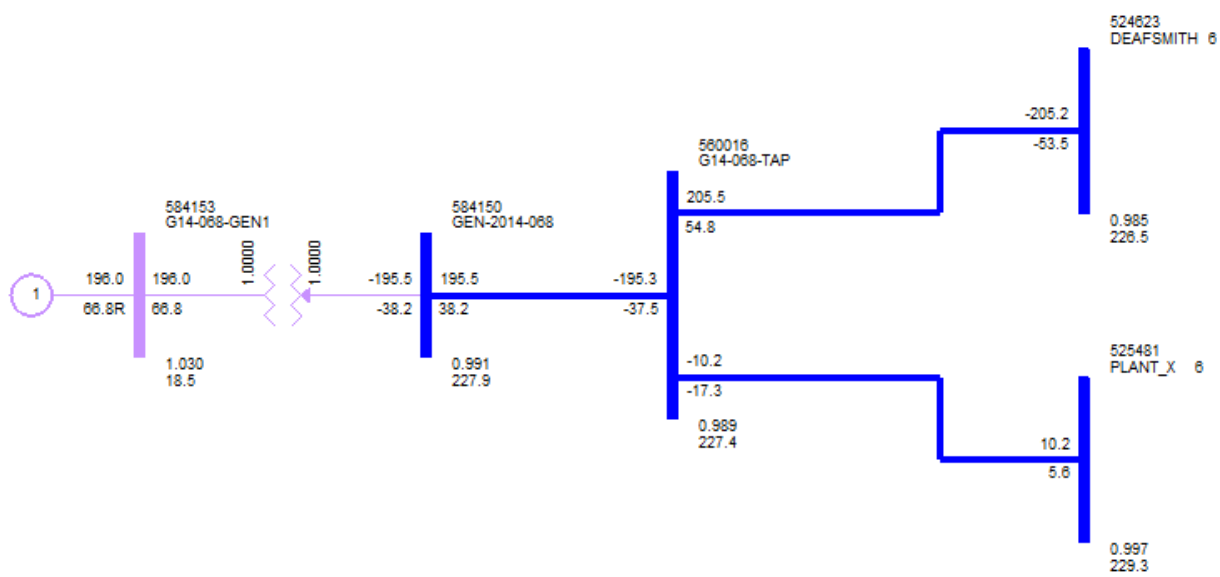

Figure 3-2: GEN-2014-068 One-Line Diagram

The GEN-2014-068 study unit was dispatched as described below.

Table 3-2: GEN-2014-068 real and reactive dispatch

	G14-068-GEN1				Vpoi
	P (MW)	Q (MVAR)	PF	Vgen	
Summer 2015	196	66.8	0.9465	1.03	0.989
Winter 2015	203	33.7	0.9865	1.03	1.013
Summer 2025	196	56.9	0.9604	1.03	0.996

The following is the detailed description of the Group 5 gas turbine project.

GEN-2014-068

- Combustion turbine
  - GE 7FA natural gas turbine
  - Summer power output: 196 MW
  - Winter power output: 203 MW
  - Power factor: 0.85 lagging, 0.95 leading at the generator bus

- Interconnection
  - Voltage: 230 kV
  - Location: Tap Deaf Smith-Plant X 230 kV line
  - Generation Step-Up Transformer Parameters
    - MVA: Rate A – 263 MVA. Rate B – 263 MVA. Rate C – 263 MVA.
    - X: 9.999% on 263 MVA base
    - X/R = 59.87
  - 230 kV line from Generator Step-Up transformer to interconnection tap on Deaf Smith-Plant X 230 kV
    - R = 0.000510, X = 0.003420, Bc = 0.006760 (pu on 100 MVA base)
    - 2.33 miles

4. POWER FACTOR RESULTS

DISIS 2015-001 Group 5 does not contain any renewable resources. As such, no Power Factor analysis was included in the scope of work

5. TRANSIENT STABILITY RESULTS

Dynamic simulations were performed using each fault noted in Table 2-4. Fault clearing times were 5 cycles for all faults except for the stuck breaker faults which had a 14.5 cycle clearing time. If reclosing occurred, faulted transmission lines were reclosed into the fault 20 cycles after the initial clearing, then cleared and locked out after one more 5 cycle interval. Faulted transformers were not reclosed.

The proposed project (GEN-2014-068 gas combustion turbine) and all other generator units in the monitored area remained stable and did not trip offline under any of the faults simulated in all three seasonal cases. However, in the 2015 Summer Peak case, the out-of-step relay (SLNOS1 model) tripped the SPS-AEPW Wheeler-Sweetwater 230 kV line for the following 230 kV faults at Potter County.

- FLT14 (Potter County-Moore County 230 kV)

- FLT16 (Potter County-Harrington East 230 kV), and
- FLT17 (Potter County-Rolling Hills 230 kV)

These Potter County 230 kV faults trip the SLNOS1 relay on the Wheeler-Sweetwater 230 kV line in the Summer 2015 case with or without GEN-2014-068. In addition, the tripping of Wheeler-Sweetwater 230 kV does not cause any loss of generation or load, or oscillation, for any of the studied faults. Therefore, this Wheeler-Sweetwater 230 kV line tripping does not indicate a problem with the GEN-2014-068 generation interconnection. The settings of the out-of-step relay will be examined by the owner of the relays (SPS/Xcel).

In addition, setting the Vestas wind turbines of GEN-2014-040 to produce a lagging power factor was necessary, or else oscillation occurred for FLT36-SB (summer 2015 & summer 2025) and for FLT03-3PH and FLT07-3PH (summer 2025 only.) The reactive output used for GEN-2014-040, documented below in Table 5-1, is well within the Vestas turbines' reactive capability range of +0.98 to -0.96. To keep the generator and POI voltages more or less consistent across all 3 seasonal cases, a lagging power factor was used in the winter 2015 case, even though oscillation was not observed with a unity power factor in the winter 2015 case.

Table 5-1: GEN-2014-040 reactive output to prevent oscillation

Case	G14-040-GEN1				G14-040-GEN2				Vpoi
	P (MW)	Q (MVAR)	PF	Vgen	P (MW)	Q (MVAR)	PF	Vgen	
Summer 2015	160	12	0.9972	1.023	160	12	0.9972	1.027	1.010
Winter 2015	160	6	0.9993	1.026	160	6	0.9993	1.030	1.023
Summer 2025	160	20	0.9923	1.029	160	20	0.9923	1.033	1.001

6. ROTOR ANGLE DAMPING AND VOLTAGE RECOVERY REQUIREMENT

Rotor angular damping and POI voltage recovery as determined via dynamic simulation were checked against all contingencies. Rotor angle plots are provided in Appendix 2 and POI voltage recovery plots are provided in Appendix 3.

For the GEN-2014-068 study unit, the worst-case fault from a standpoint of successive positive peaks was FLT02-3PH (GEN-2014-068—Plant X 230 kV line) in the Summer 2025 case. FLT02-3PH subsequently causes GEN-2014-068 to be radially connected to Deaf Smith 230 kV. For this fault, the amplitude of the second positive peak is 74.5% of the first peak, and the fifth peak is 5.2% of the first peak—easily

meeting the Rotor Angle Damping Requirement maximum limits of 95% for the second peak and 77.4% for the fifth peak.

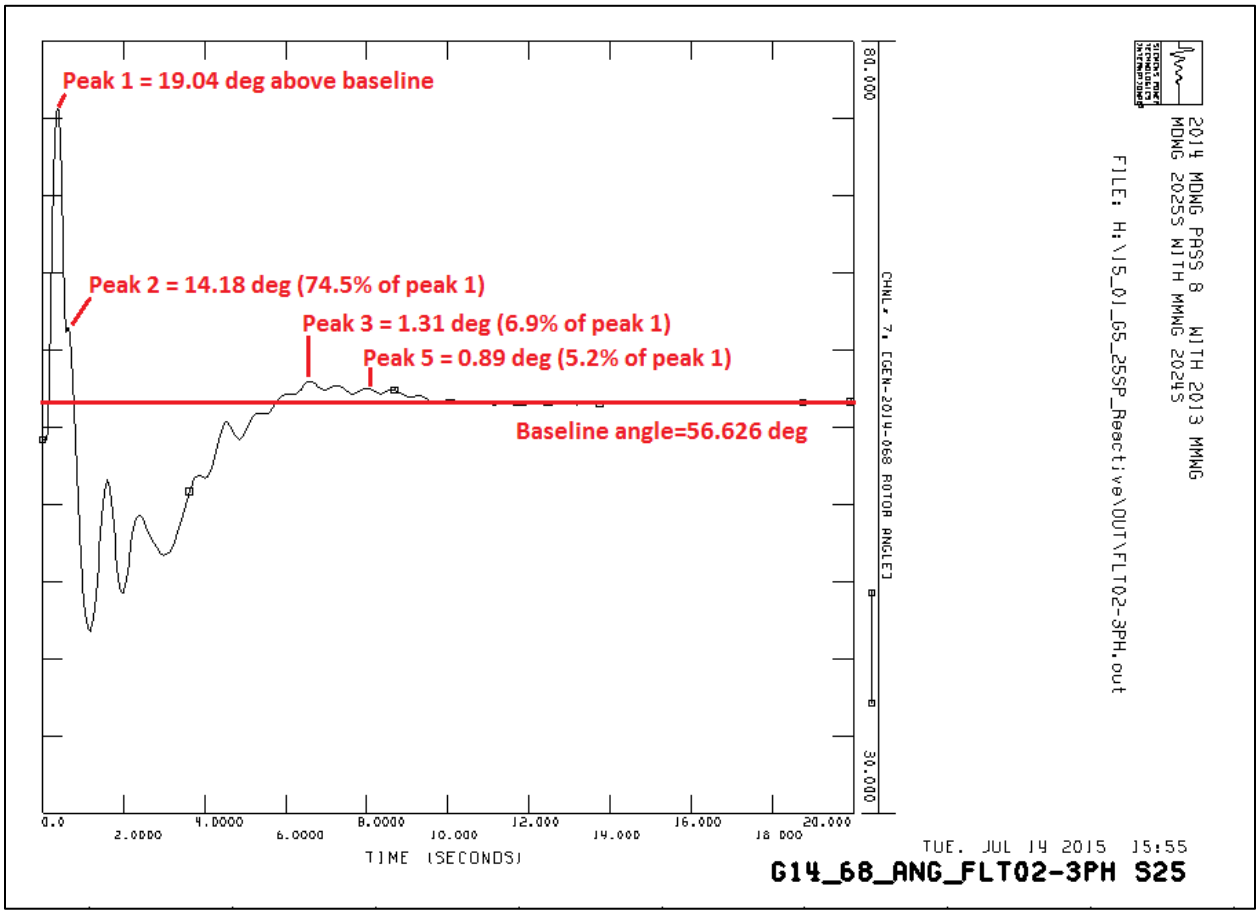

Figure 6-3: GEN-2014-068 rotor angle, FLT02-3PH, Summer 2025

In addition, the Transient Voltage Recovery Requirement was checked on the POI. As documented in Appendix 1, the Bulk Electric System voltage must not swing outside the 0.70 – 1.20 pu window after a fault is cleared.

The fault with the most POI voltage overshoot after fault clearing was FLT01-3PH (GEN-2014-068 POI – Deaf Smith 230 kV) in the Winter 2015 case. The peak POI voltage was 1.0577 and the minimum POI voltage was 1.0182 pu after fault clearing—well within the 0.70 – 1.20 pu window. None of the other faults had significant POI voltage oscillation or undershoot, i.e. all POI voltage deviations were well-damped.

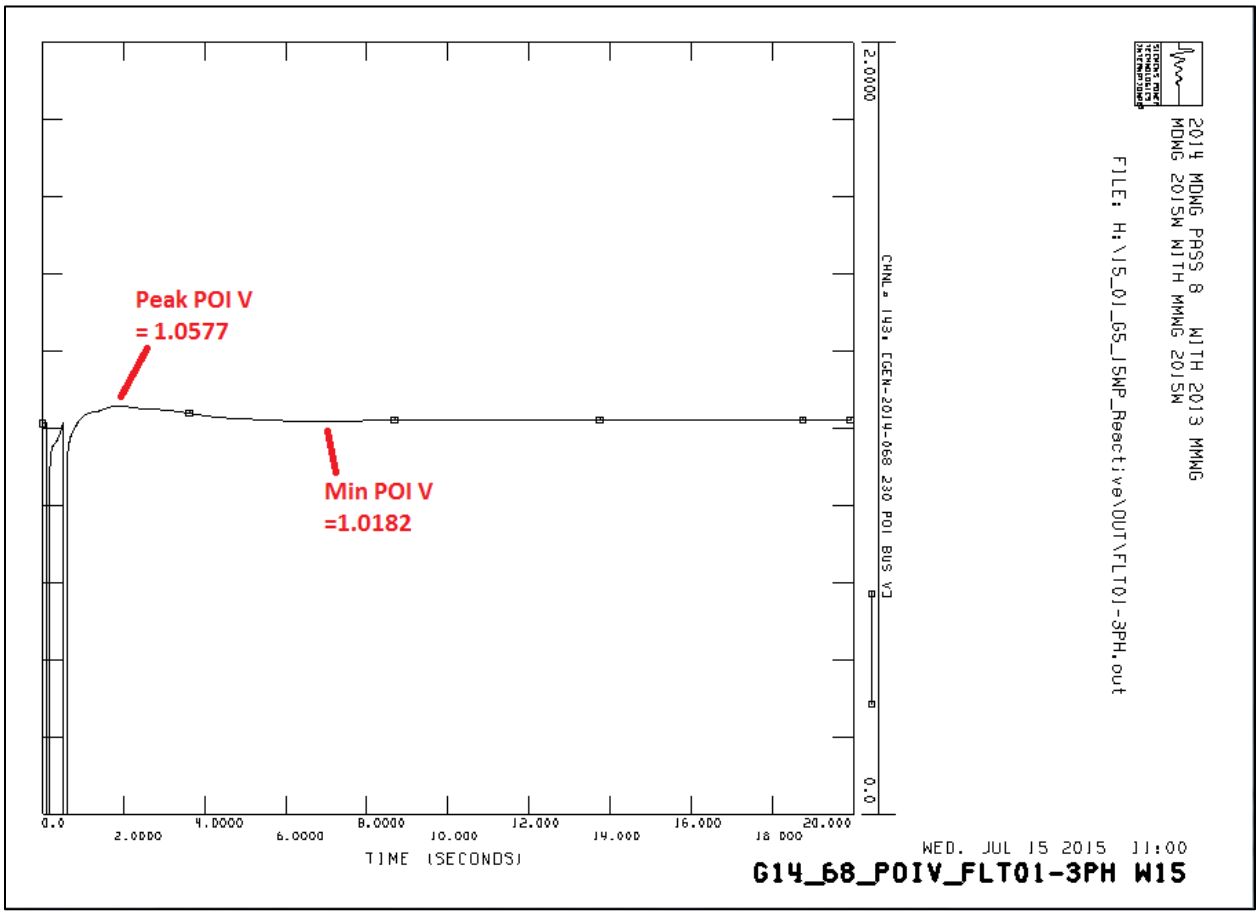

Figure 6-4: GEN-2014-068 POI voltage, FLT01-3PH, Winter 2015

If the voltage recovers post-fault to a steady-state level consistent with the steady-state simulation, the generator interconnection is considered stable from a voltage standpoint. The POI voltages were determined via dynamic simulations and AC contingency analysis. Due to generation being converted in the dynamics cases and due to dynamic effects not captured in AC contingency analysis, minor differences in voltages are to be expected between dynamic and steady-state simulations. However, all POI voltages calculated via dynamic simulation were reasonably close to the POI voltages calculated via AC contingency analysis. The largest difference between dynamic and AC contingency analysis POI voltages was 0.0039 pu for FLT18-3PH for the Winter 2015 case.

The following table shows all POI voltages for all tested contingencies, as determined by dynamic simulation and AC contingency analysis. Yellow highlighting indicates the highest voltage for a given scenario, and blue highlighting indicates the lowest voltage for a given scenario. The highest post-fault steady-state voltage was 1.0221 pu for FLT01-3PH in the Winter 2015 case as determined by AC contingency analysis (0.0092 pu rise above base case). The lowest post-fault voltage was 0.9792 pu for FLT28-3PH in the Summer 2015 case as determined by dynamic simulation (0.0092 pu drop below base case).

Following are the post-fault voltages for all simulated faults using both methods (dynamic simulation and AC contingency analysis) for all 3 study cases. All post-fault voltages were between 0.9792-1.0221 pu.

Table 6-1: GEN-2014-068 POI post-fault voltage recovery

Fault	By Dynamic Simulation			By AC Contingency Analysis		
	WIN15	SUM15	SUM25	WIN15	SUM15	SUM25
BASE CASE	1.0129	0.9884	0.9956	1.0129	0.9885	0.9956
FLT01-3PH	1.0220	1.0139	1.0152	1.0221	1.0142	1.0150
FLT02-3PH	1.0118	0.9827	0.9923	1.0119	0.9827	0.9924
FLT03-3PH	1.0157	0.9931	1.0000	1.0167	0.9966	1.0019
FLT04-3PH	1.0128	0.9883	0.9955	1.0128	0.9884	0.9955
FLT05-3PH	1.0152	0.9914	0.9979	1.0153	0.9934	0.9987
FLT06-3PH	1.0128	0.9883	0.9956	1.0128	0.9885	0.9956
FLT07-3PH	1.0097	0.9849	0.9935	1.0099	0.9854	0.9935
FLT08-3PH	1.0128	n/a	0.9954	1.0129	n/a	0.9954
FLT09-3PH	n/a	0.9882	n/a	n/a	0.9879	n/a
FLT10-3PH	1.0129	0.9880	0.9955	1.0129	0.9880	0.9954
FLT11-3PH	1.0127	0.9881	0.9955	1.0128	0.9883	0.9956
FLT12-3PH	n/a	n/a	0.9954	n/a	n/a	0.9956
FLT13-3PH	1.0125	0.9883	n/a	1.0125	0.9885	n/a
FLT14-3PH	1.0123	0.9882	0.9952	1.0126	0.9887	0.9954
FLT15-3PH	1.0124	n/a	0.9954	1.0126	n/a	0.9955
FLT16-3PH	1.0133	0.9880	0.9957	1.0135	0.9883	0.9957
FLT17-3PH	1.0138	0.9885	0.9961	1.0142	0.9890	0.9963
FLT18-3PH	1.0148	0.9861	0.9943	1.0187	0.9853	0.9942
FLT19-3PH	1.0108	0.9873	0.9949	1.0118	0.9884	0.9952
FLT19A-3PH	1.0104	0.9871	0.9947	1.0116	0.9884	0.9951
FLT20-3PH	1.0117	0.9878	0.9951	1.0123	0.9885	0.9954
FLT21-3PH	1.0122	0.9881	0.9953	1.0125	0.9885	0.9955
FLT22-3PH	1.0129	0.9880	0.9955	1.0130	0.9883	0.9956
FLT23-3PH	1.0124	0.9872	0.9953	1.0126	0.9878	0.9953
FLT24-3PH	1.0125	0.9879	0.9950	1.0127	0.9883	0.9953
FLT25-3PH	1.0119	0.9870	0.9952	1.0118	0.9886	0.9956
FLT26-3PH	1.0118	0.9869	0.9952	1.0118	0.9886	0.9956
FLT27-3PH	1.0140	0.9884	0.9959	1.0143	0.9883	0.9956

Fault	By Dynamic Simulation			By AC Contingency Analysis		
	WIN15	SUM15	SUM25	WIN15	SUM15	SUM25
FLT28-3PH	1.0085	0.9792	0.9901	1.0086	0.9800	0.9904
FLT29-3PH	1.0136	0.9908	0.9969	1.0137	0.9911	0.9964
FLT30-3PH	1.0128	0.9883	0.9954	1.0128	0.9884	0.9954
FLT31-3PH	1.0128	0.9889	0.9957	1.0128	0.9894	0.9957
FLT32-3PH	1.0129	0.9883	0.9956	1.0129	0.9885	0.9956
FLT33-3PH	1.0129	0.9856	0.9957	1.0131	0.9866	0.9957
FLT34-3PH	1.0130	0.9874	0.9956	1.0130	0.9878	0.9956
FLT35-SB	1.0102	0.9822	0.9892	1.0106	0.9831	0.9904
FLT36-SB	1.0213	1.0129	1.0141	1.0217	1.0142	1.0150

7. FAULT CURRENT ANALYSIS

A fault current study was performed on all transmission buses 5 buses away from the Point Of Interconnection bus for GEN-2014-068. The 2025 Summer Peak power flow model was exported to ASPEN. Because sequence data was not furnished, only balanced 3φ faults were simulated. Moreover, all faults were assumed to be of negligible impedance.

The resulting fault currents are noted below. The highest fault currents, in the 30,000-33,000 A range, are at Plant X 230 kV and Tolk 230 kV, with the highest post-project fault current of 32,113 A at bus 525481 (PLANT_X 6 230 kV). The highest fault current increase in both absolute and relative terms occurred at the POI bus (560016 G14-068-TAP 230), which had a 1619.9 A or 17.8% increase in fault current.

Table 7-1: Fault Currents

Bus No	Bus Name	kV	Tier	Fault Currents		Delta Amps	Delta Pct
				With G14-68	Without G14-68		
560016	G14-068-TAP	230	0	10741.3	9121.4	1619.9	17.8%
524623	DEAFSMITH 6	230	1	11019.5	9617.2	1402.3	14.6%
584150	GEN-2014-068	230	1	9761.4	n/a	n/a	n/a
525481	PLANT_X 6	230	1	32113.0	31801.1	311.9	1.0%
524622	DEAFSMITH 3	115	2	12733.0	12052.7	680.3	5.6%
525480	PLANT_X 3	115	2	26955.2	26879.7	75.5	0.3%
524267	BUSHLAND 6	230	2	10389.3	10145.1	244.2	2.4%
525461	NEWHART 6	230	2	11260.2	11226.6	33.6	0.3%
526435	SUNDOWN 6	230	2	11648.7	11642.1	6.6	0.1%

Bus No	Bus Name	kV	Tier	Fault Currents With G14-68	Fault Currents Without G14-68	Delta Amps	Delta Pct
525524	TOLK_EAST 6	230	2	30279.7	30140.0	139.7	0.5%
525531	TOLK_WEST 6	230	2	30300.1	30160.3	139.8	0.5%
525056	BC-EARTH 3	115	3	9447.0	9426.9	20.1	0.2%
524266	BUSHLAND 3	115	3	9305.0	9257.9	47.1	0.5%
524734	DS-#21 3	115	3	11261.9	11190.1	71.8	0.6%
525019	EMU&VLY_TP 3	115	3	6814.7	6810.3	4.4	0.1%
525454	HALE_CNTY 3	115	3	10507.0	10499.5	7.5	0.1%
524606	HEREFORD 3	115	3	11394.7	10861.9	532.8	4.9%
525440	LC-S_OLTON 3	115	3	7859.6	7853.3	6.3	0.1%
524567	NE_HEREFORD3	115	3	10149.0	9720.3	428.7	4.4%
525460	NEWHART 3	115	3	15364.6	15325.8	38.8	0.3%
524597	PANDAHFD 3	115	3	8676.2	8386.2	290.0	3.5%
526434	SUNDOWN 3	115	3	10382.9	10380.7	2.2	0.0%
525614	W_LITLFLDTP3	115	3	8247.2	8241.5	5.7	0.1%
526460	AMOCO_SS 6	230	3	10181.9	10177.6	4.3	0.0%
562480	G13-027-TAP	230	3	9463.0	9453.6	9.4	0.1%
525637	LAMB_CNTY 6	230	3	6142.2	6137.1	5.1	0.1%
523959	POTTER_CO 6	230	3	21240.9	21084.5	156.4	0.7%
524909	ROSEVELT_N 6	230	3	9356.7	9341.0	15.7	0.2%
524911	ROSEVELT_S 6	230	3	9345.3	9329.7	15.6	0.2%
525213	SWISHER 6	230	3	10486.7	10468.4	18.3	0.2%
525543	TOLK_TAP 6	230	3	30311.3	30171.4	139.9	0.5%
525830	TUCO_INT 6	230	3	23754.0	23740.3	13.7	0.1%
524290	WILDOR2_JUS6	230	3	7051.6	6946.6	105.0	1.5%
526525	WOLFFORTH 6	230	3	14059.3	14055.5	3.8	0.0%
525453	HALE_CNTY 2	69	4	6297.5	6295.9	1.6	0.0%
524605	HEREFORD 2	69	4	4646.7	4599.1	47.6	1.0%
524573	NE_HEREFORD2	69	4	7683.4	7531.2	152.2	2.0%
526445	AMOCO_TP 3	115	4	9801.9	9800.0	1.9	0.0%
525028	BAILEYCO 3	115	4	6817.8	6813.4	4.4	0.1%
524746	CASTRO_CNTY3	115	4	12163.6	12093.3	70.3	0.6%
524556	CENTRE_ST 3	115	4	6327.1	6159.8	167.3	2.7%
525326	COX 3	115	4	6048.0	6046.1	1.9	0.0%
524590	DAWN 3	115	4	5301.3	5226.7	74.6	1.4%
524629	DS-#6 3	115	4	6402.7	6261.2	141.5	2.3%

Bus No	Bus Name	kV	Tier	Fault Currents With G14-68	Fault Currents Without G14-68	Delta Amps	Delta Pct
525018	EMULESH&VLY3	115	4	6176.4	6172.7	3.7	0.1%
525124	HART_INDUST3	115	4	7730.5	7722.0	8.5	0.1%
524300	HILLSIDE 3	115	4	12856.0	12812.8	43.2	0.3%
525192	KRESS_INT 3	115	4	11100.8	11088.8	12.0	0.1%
525636	LAMB_CNTY 3	115	4	9654.0	9646.8	7.2	0.1%
525414	LAMTON 3	115	4	8233.8	8227.0	6.8	0.1%
526036	LC-OPDYKE 3	115	4	5897.6	5896.4	1.2	0.0%
526424	PACIFIC 3	115	4	8965.9	8964.4	1.5	0.0%
524908	ROOSEVELT 3	115	4	10487.6	10474.1	13.5	0.1%
525212	SWISHER 3	115	4	9878.5	9869.0	9.5	0.1%
525828	TUCO_INT 3	115	4	20073.7	20067.3	6.4	0.0%
525615	W_LITTLFLD 3	115	4	7704.7	7699.7	5.0	0.1%
526524	WOLFFORTH 3	115	4	10999.6	10998.4	1.2	0.0%
524415	AMA_SOUTH 6	230	4	13847.2	13805.9	41.3	0.3%
525840	ANTELOPE_1 6	230	4	23556.5	23543.0	13.5	0.1%
526161	CARLISLE 6	230	4	14017.3	14014.0	3.3	0.0%
523869	CHAN/TASCOS6	230	4	3864.5	3860.1	4.4	0.1%
583340	GEN-2012-020	230	4	9253.9	9252.2	1.7	0.0%
583840	GEN-2013-027	230	4	8381.4	8374.2	7.2	0.1%
523979	HARRNG_EST 6	230	4	26953.7	26825.0	128.7	0.5%
526337	JONES 6	230	4	20747.3	20743.1	4.2	0.0%
526269	LUBBCK_STH 6	230	4	18937.3	18933.2	4.1	0.0%
523309	MOORE_CNTY 6	230	4	6788.9	6783.1	5.8	0.1%
524770	PLSNT_HILL 6	230	4	6266.9	6259.6	7.3	0.1%
599955	PNM-DC6	230	4	9310.4	9295.0	15.4	0.2%
524010	ROLLHILLS 6	230	4	19993.5	19895.8	97.7	0.5%
524915	SW_4K33 6	230	4	9356.8	9341.2	15.6	0.2%
524276	WILDOR_WND 6	230	4	5258.3	5202.7	55.6	1.1%
526935	YOAKUM 6	230	4	19295.8	19291.9	3.9	0.0%
523961	POTTER_CO 7	345	4	7897.7	7881.2	16.5	0.2%
525549	TOLK 7	345	4	7179.5	7171.5	8.0	0.1%
525832	TUCO_INT 7	345	4	13841.7	13837.6	4.1	0.0%
525027	BAILEYCO 2	69	5	5439.5	5437.8	1.7	0.0%
524745	CASTRO_CNTY2	69	5	9065.2	8933.4	131.8	1.5%
524554	CENTRE_ST 2	69	5	4055.2	4010.1	45.1	1.1%

Bus No	Bus Name	kV	Tier	Fault Currents With G14-68	Fault Currents Without G14-68	Delta Amps	Delta Pct
525325	COX 5325	69	5	3006.3	3006.0	0.3	0.0%
524633	DS-#4 2	69	5	3384.8	3359.3	25.5	0.8%
524580	DS-#9 2	69	5	3431.9	3405.9	26.0	0.8%
524561	DS-MTR 2	69	5	6851.1	6729.4	121.7	1.8%
525191	KRESS_INT 2	69	5	4073.8	4072.9	0.9	0.0%
525635	LAMB_CNTY 2	69	5	6155.5	6153.8	1.7	0.0%
525413	LAMTON 2	69	5	4630.5	4629.1	1.4	0.0%
525291	PLAINVW_TP 2	69	5	5945.3	5943.8	1.5	0.0%
525298	S_PLAINVEW 2	69	5	2565.8	2565.5	0.3	0.0%
525432	SP-HALFWAY 2	69	5	5429.6	5428.4	1.2	0.0%
525826	TUCO_INT 2	69	5	7760.7	7760.2	0.5	0.0%
525816	TUCO_INT2 2	69	5	4373.2	4373.0	0.2	0.0%
524414	AMA_SOUTH 3	115	5	16906.8	16860.7	46.1	0.3%
526452	AMOCO_CRYO 3	115	5	6263.2	6262.5	0.7	0.0%
525040	BAILEY_PMP 3	115	5	5080.0	5077.7	2.3	0.0%
524516	CANYON_WEST3	115	5	4926.0	4894.2	31.8	0.6%
526160	CARLISLE 3	115	5	13149.0	13147.3	1.7	0.0%
526361	COCHRAN 3	115	5	6642.3	6641.7	0.6	0.0%
524306	COULTER 3	115	5	15717.1	15664.9	52.2	0.3%
524822	CURRY 3	115	5	11412.8	11393.4	19.4	0.2%
524694	DS-#22 3	115	5	5165.9	5153.6	12.3	0.2%
525780	FLOYD_CNTY 3	115	5	6245.2	6244.3	0.9	0.0%
524655	FRIONA 3	115	5	4104.4	4077.0	27.4	0.7%
560032	G15-018T	115	5	6067.3	6062.9	4.4	0.1%
584220	GEN-2014-040	115	5	10625.1	10582.3	42.8	0.4%
584640	GEN-2015-022	115	5	9859.5	9850.1	9.4	0.1%
526020	HOCKLEY 3	115	5	5694.4	5693.2	1.2	0.0%
525272	KISER 3	115	5	5181.4	5179.6	1.8	0.0%
525225	KRESS_RURAL3	115	5	6278.9	6275.6	3.3	0.1%
526484	LG-LEVELAND3	115	5	8892.4	8891.0	1.4	0.0%
526298	LUBBCK_EST 3	115	5	14577.8	14576.1	1.7	0.0%
526268	LUBBCK_STH 3	115	5	19053.5	19051.1	2.4	0.0%
523308	MOORE_E 3	115	5	10611.6	10606.1	5.5	0.1%
525608	NEW_AMHERST3	115	5	5432.4	5430.0	2.4	0.0%
524768	PLSNT_HILL 3	115	5	9963.5	9951.1	12.4	0.1%

Bus No	Bus Name	kV	Tier	Fault Currents With G14-68	Fault Currents Without G14-68	Delta Amps	Delta Pct
524924	PORTALES 3	115	5	7404.8	7398.5	6.3	0.1%
524007	ROLLHILLS 3	115	5	19566.4	19523.9	42.5	0.2%
526076	STANTON_W 3	115	5	9211.6	9210.7	0.9	0.0%
526736	TERRY_CNTY 3	115	5	10251.7	10250.8	0.9	0.0%
525179	TULIA_TP 3	115	5	6400.0	6395.7	4.3	0.1%
526934	YOAKUM 3	115	5	15982.7	15981.4	1.3	0.0%
526475	YUMA_INT 3	115	5	10831.6	10830.5	1.1	0.0%
584030	G14053&14054	230	5	8357.9	8356.8	1.1	0.0%
526677	GRASSLAND 6	230	5	6385.0	6384.6	0.4	0.0%
523978	HARRNG_MID 6	230	5	27089.3	26959.5	129.8	0.5%
523977	HARRNG_WST 6	230	5	27046.3	26916.9	129.4	0.5%
523095	HITCHLAND 6	230	5	15115.3	15110.8	4.5	0.0%
527894	HOBBS_INT 6	230	5	21228.1	21228.1	0.0	0.0%
522870	LP-HOLLY 6	230	5	16762.5	16759.8	2.7	0.0%
522823	LP-MILWAKEE6	230	5	13549.8	13546.8	3.0	0.0%
522861	LP-SOUTHEST6	230	5	17083.5	17080.2	3.3	0.0%
526299	LUBBCK_EST 6	230	5	13632.3	13630.5	1.8	0.0%
527149	MUSTANG 6	230	5	17306.2	17304.4	1.8	0.0%
524044	NICHOLS 6	230	5	26295.8	26176.9	118.9	0.5%
560025	NORTON 6	230	5	3003.7	3002.3	1.4	0.0%
524875	OASIS 6	230	5	7759.4	7749.1	10.3	0.1%
527010	OXYBRU_TP 6	230	5	15055.2	15053.3	1.9	0.0%
523267	PRINGLE 6	230	5	4624.9	4622.8	2.1	0.0%
524365	RANDALL 6	230	5	14771.7	14722.8	48.9	0.3%
523221	XIT_INTG 6	230	5	2649.4	2647.6	1.8	0.1%
515458	BORDER 7	345	5	5105.5	5105.4	0.1	0.0%
560007	G08-022-TAP	345	5	5342.0	5340.0	2.0	0.0%
560011	G14-038T	345	5	10291.8	10287.2	4.6	0.0%
560027	G14-074-TAP	345	5	6702.3	6701.7	0.6	0.0%
524296	SPNSPUR_WND7	345	5	4781.2	4775.8	5.4	0.1%
526936	YOAKUM_345	345	5	9996.1	9995.0	1.1	0.0%

8. CONCLUSIONS

Based on the results of dynamic simulation studies, the following findings apply to Group 5, consisting of GEN-2014-068 (gas combustion turbine):

- GEN-2014-068 is compliant with the Rotor Angle Damping Requirement and is stable for all of the modeled disturbances.

- GEN-2014-068 is compliant with the Transient Voltage Recovery Requirement.

- The Wheeler-Sweetwater 230 kV out-of-step relay trips for Potter County 230 kV faults for the Summer 2015 case, with or without GEN-2014-068. The tripping of the out-of-step relay does not cause any transmission system instability. The settings for the relay will need to be examined.

- All generators in the monitored areas remain stable for all of the modeled disturbances.

APPENDIX 1

ROTOR ANGLE DAMPING REQUIREMENT

Machine Rotor Angles shall exhibit well damped angular oscillations [as defined below] and acceptable power swings following a disturbance on the Bulk Electric System for all NERC Category A, B and C events.

Well damped angular oscillations shall meet one of the following two requirements when calculated directly from the rotor angle:

1. Successive Positive Peak Ratio (SPPR) must be less than or equal to 0.95 where SPPR is calculated as follows:

$$\text{SPPR} = \frac{\text{Peak Rotor Angle of 2}^{\text{nd}}\text{ Positive Swing Peak}}{\text{Peak Rotor Angle of 1}^{\text{st}}\text{ Positive Swing Peak}} \leq 0.95$$

-or- Damping Factor % = (1 – SPPR) x 100% $\geq$ 5%

The machine rotor angle damping ratio may be determined by appropriate modal analysis (i.e. Prony Analysis) where the following equivalent requirement must be met:

Damping Ratio $\geq$ 0.0081633

2. Successive Positive Peak Ratio Five (SPPR5) must be less than or equal to 0.774 where SPPR5 is calculated as follows:

$$\text{SPPR5} = \frac{\text{Peak Rotor Angle of 5}^{\text{th}}\text{ Positive Swing Peak}}{\text{Peak Rotor Angle of 1}^{\text{st}}\text{ Positive Swing Peak}} \leq 0.774$$

-or- Damping Factor % = (1 – SPPR5) x 100% $\geq$ 22.6%

The machine rotor angle damping ratio may be determined by appropriate modal analysis (i.e. Prony Analysis) where the following equivalent requirement must be met:

Damping Ratio $\geq$ 0.0081633

Qualitatively, these Requirements are shown in Figure 1 below.

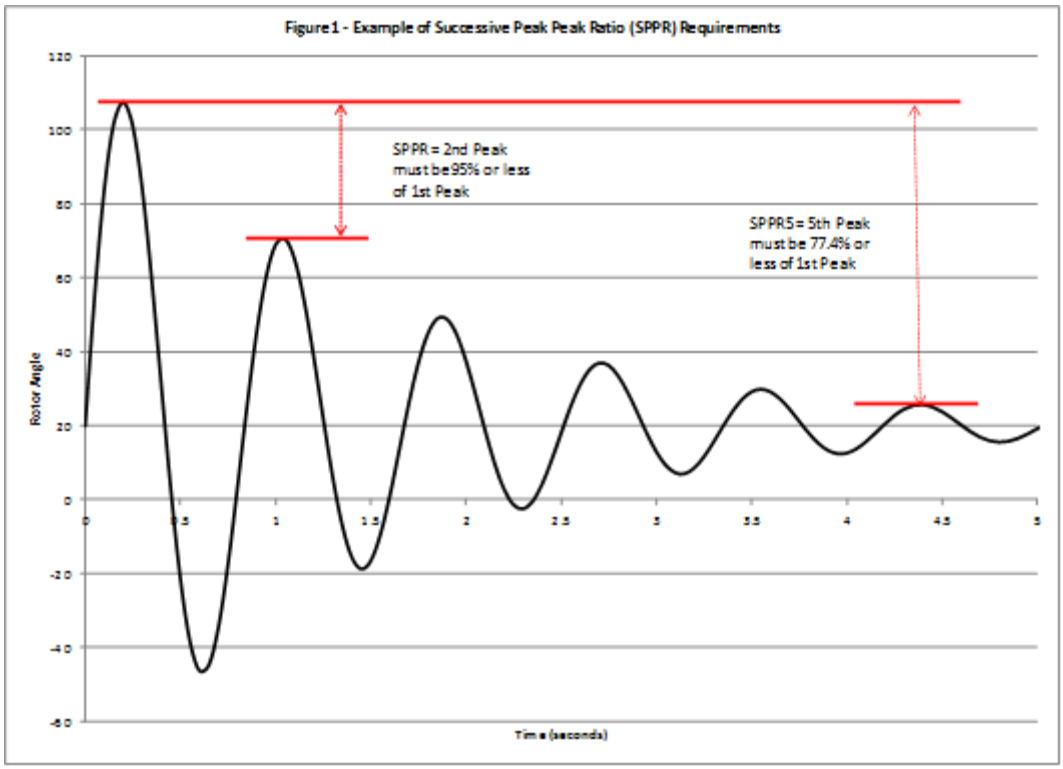
Figure 1 - Example of Successive Peak Peak Ratio (SPPR) Requirements
SPPR = 2nd Peak must be 95% or less of 1st Peak
SPPR5 = 5th Peak must be 77.4% or less of 1st Peak
Rotor Angle
Time (seconds)
120
100
80
60
40
20
0
-20
-40
-60
0
0.5
1
1.5
2
2.5
3
3.5
4
4.5
5

0: Group 6 Dynamic Stability Analysis Report

See MEPPI report next page

MITSUBISHI ELECTRIC POWER PRODUCTS, INC.
POWER SYSTEMS ENGINEERING SERVICES
530 KEYSTONE DRIVE
WARRENDALE, PA 15086, U.S.A.

Phone: (724) 778-5111 Fax: (724) 778-5149
Home Page: www.meppi.com

Southwest Power Pool, Inc. (SPP)

DISIS-2015-001 (Group 06) Definitive Impact Study

Final Report

PXE-1109
Revision #00

August 2015

Submitted By:
Mitsubishi Electric Power Products, Inc. (MEPPI)
Power Systems Engineering Services Department
Warrendale, PA

Title: **DISIS-2015-001 (Group 6) Definitive Impact Study: Final Report PXE-1109**
Date: August 2015
Author: Adam W. Gerstnecker; Engineer I, Power Systems Engineering Dept. *Adam W. Gerstnecker*
Reviewed: Nicholas W. Tenza; Engineer II, Power Systems Engineering Dept. *Nicholas W. Tenza*
Approved: Elizabeth M. Cook; Section Manager, Power Systems Engineering Dept. *Elizabeth M. Cook*

EXECUTIVE SUMMARY

SPP requested a Definitive Interconnection System Impact Study (DISIS). The DISIS required a Stability Analysis, Short Circuit Analysis, Power Factor Analysis, and Low Wind/No Wind Analysis detailing the impacts of the interconnecting projects as shown in Table ES-1.

Table ES-1
Interconnection Projects Evaluated

Request	Size (MW)	Generator Model	Point of Interconnection
GEN-2014-046	125.4	SMA SC 825CP Inverter (584283)	Chaves County 115kV(527482)
GEN-2014-065	99.0	SMA SC 900CP Inverter (584433)	Whitten 115kV (528540)
GEN-2014-074	152.0	Vestas V110 2.0MW (584443)	Tap Tuco – OKU 345kV (560027)
GEN-2015-009	300.0	Vestas V110 2.0MW (584533, 584536)	Hobbs 230kV (527894)
GEN-2015-010	250.7	GE 2.3MW (584543)	Tap on Roosevelt South (524911) to Tolk East (525524) 230kV (560034)
GEN-2015-014	150.0	Vestas V110 2.0MW (584563)	Tap on Cochran – LG Plains 115kV (560030)
GEN-2015-018	80.0	80.0 GE 2.0MW (584603)	Tap on Curry County (524822) to Bailey County (525028) 115kV (560032)
GEN-2015-020	100.0	Eaton Power Xpert Solar 1.67MW (584623)	Oasis 115kV (524874)
GEN-2015-022	112.0	GE LV5 4.0MW Inverters (584643)	Swisher 115kV (525212)
ASGI-2015-002	2.0	GE 2.0MW (584723)	Yuma Interchange 115/69kV (526469)
ASGI-2015-003	30.0	AE 1000NX 1.0MW (584733)	FEC New POI 115kV (524509)

SUMMARY OF STABILITY ANALYSIS

The Stability Analysis determined that there was one contingency that resulted in generation tripping offline for the 2015 Summer Peak, 2015 Winter Peak, 2020 Summer Peak, 2020 Winter Peak, and 2025 Summer Peak conditions when all generation interconnection requests were at 100% output. The following contingency required system upgrades in order to achieve system stability and recover within the SPP criteria:

- FLT215-3PH: Loss of the G14-074 Tap to Tuco 345 kV line

To mitigate generation tripping offline for FLT215-3PH, the following upgrades were implemented as discussed with SPP:

- Add an SVC at the G14-074 Tap 345 kV bus
    - 2015SP: -25 Mvar
    - 2015WP: -30 Mvar
    - 2020SP: -30 Mvar
    - 2020WP: -30 Mvar
    - 2025SP: -25 Mvar

After implementing the above upgrades, the contingency analysis was re-simulated for all contingencies. With the new upgrades, the Stability Analysis determined that there was no wind turbine tripping or system instability observed as a result of interconnecting all study projects at 100% output.

SUMMARY OF THE SHORT CIRCUIT ANALYSIS

The short circuit analysis was performed on the 2025 Summer Peak power flow for all study projects. Refer to Table ES-2 for a list of maximum fault currents observed for each study project.

Table ES-2
List of Maximum Fault Currents Observed for Each Study Project

Ref. No.	Study Project	Maximum Fault Current (kA)	Fault Location	Bus Voltage (kV)
1	GEN-2014-046	29.60	CUNNINHAM 3	115
2	GEN-2014-065	9.63	NA_ENRICH 3	115
3	GEN-2014-074	35.14	LP-COOK 2	69
4	GEN-2015-009	32.93	HOBBS_INT 3	115
5	GEN-2015-010	35.14	LP-COOK 2	69
6	GEN-2015-014	29.00	PLANT_X 6	230
7	GEN-2015-018	31.18	TOLK_EAST 6	230
8	GEN-2015-020	31.18	TOLK_EAST 6	230
9	GEN-2015-022	31.18	TOLK_EAST 6	230
10	ASGI-2015-002	29.00	PLANT_X 6	230
11	ASGI-2015-003	31.18	TOLK_WEST 6	230

SUMMARY OF POWER FACTOR ANALYSIS

It was observed that SVC and capacitor bank upgrades were required at the Border 345 kV substation following the loss of the G14-074 Tap to OKU 345 kV line (FLT214-3PH). The following upgrades were implemented, as discussed with SPP, due to depressed voltages near the Border 345 kV area[1]:

- Increase Border SVC to 200 Mvar
- Add a 200 Mvar capacitor bank to Border 345 kV (4 steps of 50 Mvar each)

Study Generator GEN-2014-046

The Power Factor Analysis shows that GEN-2014-046 has a power factor range of 0.986 to 0.998 leading (absorbing) for the 2015 Summer Peak conditions, a power factor range of 0.995 leading (absorbing) to 1.00 (unity) for the 2015 Winter Peak conditions, a power factor range of 0.981 leading (absorbing) to 1.00 (unity) for the 2020 Summer Peak conditions, a power factor range of 0.982 leading (absorbing) to 0.999 leading (absorbing) for the 2020 Winter Peak conditions, and a power factor range of 0.991 leading (absorbing) to 1.00 (unity) for the 2025 Summer Peak conditions.

[1] SPP added additional Network Upgrades to the powerflow cases prior to providing the cases to MEPPI

Study Generator GEN-2014-065

The Power Factor Analysis shows that GEN-2014-065 has a power factor range of 0.945 lagging (supplying) to 0.979 leading (absorbing) for the 2015 Summer Peak conditions, a power factor range of 0.977 lagging (supplying) to 0.981 leading (absorbing) for the 2015 Winter Peak conditions, a power factor range of 0.951 lagging (supplying) to 1.00 (unity) for the 2020 Summer Peak conditions, a power factor range of 0.970 lagging (supplying) to 0.996 leading (absorbing) for the 2020 Winter Peak conditions, and a power factor range of 0.830 to 0.989 lagging (supplying) for the 2025 Summer Peak conditions.

Study Generator GEN-2014-074

The Power Factor Analysis shows that GEN-2014-074 has a power factor range of 0.476 lagging (supplying) to 0.980 leading (absorbing) for the 2015 Summer Peak conditions, a power factor range of 0.431 lagging (supplying) to 0.982 leading (absorbing) for the 2015 Winter Peak conditions, a power factor range of 0.328 lagging (supplying) to 0.980 leading (absorbing) for the 2020 Summer Peak conditions, a power factor range of 0.470 lagging (supplying) to 0.983 leading (absorbing) for the 2020 Winter Peak conditions, and a power factor range of 0.556 lagging (supplying) to 0.968 leading (absorbing) for the 2025 Summer Peak conditions.

Study Generator GEN-2015-009

The Power Factor Analysis shows that GEN-2015-009 has a power factor range of 0.990 leading (absorbing) to 1.00 (unity) for the 2015 Summer Peak conditions, a power factor range of 0.992 leading (absorbing) to 1.00 (unity) for the 2015 Winter Peak conditions, a power factor range of 0.973 to 0.997 lagging (supplying) for the 2020 Summer Peak conditions, a power factor range of 0.987 to 0.997 lagging (supplying) for the 2020 Winter Peak conditions, and a power factor range of 0.977 lagging (supplying) to 1.00 (unity) for the 2025 Summer Peak conditions.

Study Generator GEN-2015-010

The Power Factor Analysis shows that GEN-2015-010 has a power factor range of 0.998 lagging (supplying) to 0.970 leading (absorbing) for the 2015 Summer Peak conditions, a power factor range of 0.997 lagging (supplying) to 0.959 leading (absorbing) for the 2015 Winter Peak conditions, a power factor range of 0.995 lagging (supplying) to 0.969 leading (absorbing) for the 2020 Summer Peak conditions, a power factor range of 0.991 lagging (supplying) to 0.968 leading (absorbing) for the 2020 Winter Peak conditions, and a power factor range of 0.991 lagging (supplying) to 0.981 leading (absorbing) for the 2025 Summer Peak conditions.

Study Generator GEN-2015-014

The Power Factor Analysis shows that GEN-2015-014 has a power factor range of 0.955 to 0.999 leading (absorbing) for the 2015 Summer Peak conditions, a power factor range of 0.964 to 0.998 leading (absorbing) for the 2015 Winter Peak conditions, a power factor range of 0.949 to 0.997 leading (absorbing) for the 2020 Summer Peak conditions, a power factor range of

0.968 to 0.995 leading (absorbing) for the 2020 Winter Peak conditions, and a power factor range of 0.949 to 0.999 leading (absorbing) for the 2025 Summer Peak conditions.

Study Generator GEN-2015-018

The Power Factor Analysis shows that GEN-2015-018 has a power factor range of 0.997 lagging (absorbing) to 0.946 leading (absorbing) for the 2015 Summer Peak conditions, a power factor range of 0.967 leading (absorbing) to 1.00 (unity) for the 2015 Winter Peak conditions, a power factor range of 0.996 lagging (absorbing) to 0.940 leading (absorbing) for the 2020 Summer Peak conditions, a power factor range of 0.970 leading (absorbing) to 1.00 (unity) for the 2020 Winter Peak conditions, and a power factor range of 0.991 lagging (absorbing) to 0.941 leading (absorbing) for the 2025 Summer Peak conditions.

Study Generator GEN-2015-020

The Power Factor Analysis shows that GEN-2015-020 has a power factor range of 0.998 lagging (supplying) to 0.947 leading (absorbing) for the 2015 Summer Peak conditions, a power factor range of 0.951 lagging (supplying) to 0.932 leading (absorbing) for the 2015 Winter Peak conditions, a power factor range of 0.995 lagging (supplying) to 0.939 leading (absorbing) for the 2020 Summer Peak conditions, a power factor range of 0.981 lagging (supplying) to 0.921 leading (absorbing) for the 2020 Winter Peak conditions, and a power factor range of 0.989 lagging (supplying) to 0.942 leading (absorbing) for the 2025 Summer Peak conditions.

Study Generator GEN-2015-022

The Power Factor Analysis shows that GEN-2015-022 has a power factor range of 0.970 lagging (supplying) to 0.916 leading (absorbing) for the 2015 Summer Peak conditions, a power factor range of 0.991 lagging (supplying) to 0.946 leading (absorbing) for the 2015 Winter Peak conditions, a power factor range of 0.938 lagging (supplying) to 0.891 leading (absorbing) for the 2020 Summer Peak conditions, a power factor range of 0.998 lagging (supplying) to 0.945 leading (absorbing) for the 2020 Winter Peak conditions, and a power factor range of 0.920 lagging (supplying) to 0.864 leading (absorbing) for the 2025 Summer Peak conditions.

Study Generator ASGI-2015-002

The Power Factor Analysis shows that ASGI-2015-002 has a power factor range of 0.515 lagging (supplying) to 0.614 leading (absorbing) for the 2015 Summer Peak conditions, a power factor range of 0.591 lagging (supplying) to 0.661 leading (absorbing) for the 2015 Winter Peak conditions, a power factor range of 0.601 lagging (supplying) to 0.688 leading (absorbing) for the 2020 Summer Peak conditions, a power factor range of 0.742 lagging (supplying) to 0.907 leading (absorbing) for the 2020 Winter Peak conditions, and a power factor range of 0.471 lagging (supplying) to 0.550 leading (absorbing) for the 2025 Summer Peak conditions.

Study Generator ASGI-2015-003

The Power Factor Analysis shows that ASGI-2015-003 has a power factor range of 0.963 to 0.988 lagging (supplying) for the 2015 Summer Peak conditions, a power factor range of 0.969 to 0.995 lagging (supplying) for the 2015 Winter Peak conditions, a power factor range of 0.973 to 0.995 lagging (supplying) for the 2020 Summer Peak conditions, a power factor range of 0.961 to 0.992 lagging (supplying) for the 2020 Winter Peak conditions, and a power factor range of 0.960 to 0.988 lagging (supplying) for the 2025 Summer Peak conditions.

SUMMARY OF LOW WIND/NO WIND ANALYSIS

The amount of reactive power injected into the transmission network was recorded at the point of interconnection for GEN-2014-074, GEN-2015-009, and GEN-2015-010 for each season. The maximum reactance needed for zero Mvar flow was -20.1 Mvar for GEN-2015-009 (Hobbs 230 kV). The minimum reactance needed for zero Mvar flow was -8.9 Mvar for GEN-2014-074 (Tap Tuco - OKU 345 kV).

Table of Contents

Section 1: Objectives 9
Section 2: Background 9
Section 3: Stability Analysis 49
3.1 Approach 49
3.2 Cluster Scenario Results 52
3.3 Stand Alone Scenario Result: GEN-2014-046 60
3.4 Stand Alone Scenario Result: GEN-2014-065 61
3.5 Stand Alone Scenario Result: GEN-2014-074 62
3.6 Stand Alone Scenario Result: GEN-2015-009 64
3.7 Stand Alone Scenario Result: GEN-2015-010 65
3.8 Stand Alone Scenario Result: GEN-2015-014 67
3.9 Stand Alone Scenario Result: GEN-2015-018 68
3.10 Stand Alone Scenario Result: GEN-2015-020 70
3.11 Stand Alone Scenario Result: GEN-2015-022 72
3.12 Stand Alone Scenario Result: ASGI-2015-002 74
3.13 Stand Alone Scenario Result: ASGI-2015-003 76
Section 4: Short Circuit Analysis 77
4.1 Approach 77
4.2 Short Circuit Analysis Results 78
Section 5: Power Factor Analysis 87
5.1 Approach 88
5.2 Power Factor Analysis Results 90
Section 6: Low Wind/No Wind Analysis 125
6.1 Approach 125
6.2 Low Wind/No Wind Analysis Results 125
Section 7: Conclusions 126

SECTION 1: OBJECTIVES

The objective of this report is to provide Southwest Power Pool, Inc. (SPP) with the deliverables for the "DISIS-2015-001 (Group 6) Definitive Impact Study." SPP requested an Interconnection System Impact Study for eleven (11) generation interconnections for 2015 Summer Peak, 2015 Winter Peak, 2020 Summer Peak, 2020 Winter Peak, and 2025 Summer Peak, which requires a Stability Analysis, Short Circuit Analysis, Power Factor Analysis, Low Wind/No Wind Analysis, and an Impact Study Report.

SECTION 2: BACKGROUND

The Siemens Power Technologies, Inc. PSS/E power system simulation program Version 32.2.0 was used for this study. SPP provided the stability database cases for 2015 Summer Peak, 2015 Winter Peak, 2020 Summer Peak, 2020 Winter Peak, and 2025 Summer Peak conditions and a list of contingencies to be examined. The model includes the study projects shown in Table 2-1 and the previously queued projects listed in Table 2-2. Refer to Appendix A for the steady-state and dynamic model data for the study projects. A power flow one-line diagram for each generation interconnection project is shown in Figures 2-1 through 2-11. Note that the one-line diagrams represent the 2015 Summer Peak case.

The Stability Analysis determined the impacts of the new interconnecting projects on the stability and voltage recovery of the nearby system and the ability of the interconnecting projects to meet FERC Order 661A. If problems with stability or voltage recovery are identified, the need for reactive compensation or system upgrades will be investigated. Three-phase faults and single line-to-ground faults will be examined as listed in Table 2-3. Note that all contingencies listed were examined for the cluster scenario, and specified contingencies (indicated by an X) were examined for each Stand Alone generator as listed in Table 2-4.

A Short Circuit Analysis was performed on the 2025 Summer Peak study year for each study generator in the Cluster Scenario. The study was performed five buses out from the study generator's point of interconnection and results were documented.

The Power Factor Analysis determined the power factor at the point of interconnection for the wind or solar interconnection projects for pre-contingency and post-contingency conditions. Table 2-3 lists the contingencies developed from the three-phase fault definitions provided in the group's interconnection impact study request.

The Low Wind/No Wind Analysis was completed for wind farm interconnections that interconnect to a 345 kV or 230 kV bus. This analysis determined if reactive support is needed to have an Mvar flow of approximately zero at the point of interconnection (POI).

Table 2-1
Interconnection Projects Evaluated

Request	Size (MW)	Generator Model	Point of Interconnection
GEN-2014-046	125.4	SMA SC 825CP Inverter (584283)	Chaves County 115kV(527482)
GEN-2014-065	99.0	SMA SC 900CP Inverter (584433)	Whitten 115kV (528540)
GEN-2014-074	152.0	Vestas V110 2.0MW (584443)	Tap Tuco – OKU 345kV (560027)
GEN-2015-009	300.0	Vestas V110 2.0MW (584533, 584536)	Hobbs 230kV (527894)
GEN-2015-010	250.7	GE 2.3MW (584543)	Tap on Roosevelt South (524911) to Tolk East (525524) 230kV (560034)
GEN-2015-014	150.0	Vestas V110 2.0MW (584563)	Tap on Cochran – LG Plains 115kV (560030)
GEN-2015-018	80.0	80.0 GE 2.0MW (584603)	Tap on Curry County (524822) to Bailey County (525028) 115kV (560032)
GEN-2015-020	100.0	Eaton Power Xpert Solar 1.67MW (584623)	Oasis 115kV (524874)
GEN-2015-022	112.0	GE LV5 4.0MW Inverters (584643)	Swisher 115kV (525212)
ASGI-2015-002	2.0	GE 2.0MW (584723)	Yuma Interchange 115/69kV (526469)
ASGI-2015-003	30.0	AE 1000NX 1.0MW (584733)	FEC New POI 115kV (524509)

Table 2-2
Previously Queued Nearby Interconnection Projects Included

Request	Size (MW)	Generator Model	Point of Interconnection
GEN-2001-033	180	Mitsubishi 1000	San Juan Mesa 230kV (524885)
GEN-2001-036	80	Mitsubishi 1000	Norton 115kV (524502)
GEN-2006-018	170	GENSAL	Tuco 230kV (525830)
GEN-2006-026	502	GENROU (527901, 527902, 527903)	Hobbs 115kV(527891) Hobbs 230kV (527894)
GEN-2008-022	300	GE 2.5MW	Tap on Eddy County – Tolk 345kV line (G08-022-POI, 560007)
GEN-2010-006	180 Summer 205 Winter	GENROU	Jones_bus2 230kV(526337)
ASGI-2010-010	42	GENSAL	Lovington 115kV (528334)
ASGI-2010-020	30	Nordex 2.5MW	Tap LE-Tatum to LE-Crsroads 69kV (AS10-020-POI, 560360)
ASGI-2010-021	15	Mitsubishi MPS-1000A 1.0MW	Tap LE-Saundrtp to LE-Anderson 69kV (ASGI-021-POI, 560364)
GEN-2010-046	56	GENSAL	Tuco 230kV (525830)
ASGI-2011-001	27.3	Suzlon 2.1MW	Lovington 115kV (528334)
ASGI-2011-003	10	Sany 2.0MW	Hendricks 69kV (525943)
ASGI-2011-004	19.8	Sany 1.8MW	Crosby 69kV (525915)
GEN-2011-025	80	GE 1.6MW	Tap on Floyd County - Crosby County 115kV line (G11-025-POI, 562004)
GEN-2011-045	180 Summer 205 Winter	GENROU	Jones_bus2 230kV (526337)
GEN-2011-046	23 Summer 27 Winter	GENROU	Quay County 115kV (524472)
GEN-2011-048	165 Summer 175 Winter	GENROU	Mustang 230kV (527151)
GEN-2012-001	61.2	CCWE 3.6MW (WT4)	Tap Grassland to Borden 230kV (526679)
ASGI-2012-002	18	Vestas 1.65MW V82	Clovis 115kV (524808)
GEN-2012-009	15 MW increase (Pgen=165MW)	GENROU	Mustang 230kV (527151)
GEN-2012-010	15 MW increase (Pgen=165MW)	GENROU	Mustang 230kV (527151)
GEN-2012-020	478	GE 1.68MW	Tuco 230kV (525830)
GEN-2012-034	7 MW increase (Pgen=172MW)	GENROU	Mustang 230kV (527151)
GEN-2012-035	7 MW increase (Pgen=172MW)	GENROU	Mustang 230kV (527151)
GEN-2012-036	7 MW increase (Pgen=172MW Summer/185MW Winter)	GENROU	Mustang 230kV (527151)
GEN-2012-037	196 Summer 203 Winter	GENROU	Tuco 345kV (525832)

Table 2-2 (Continued)
Previously Queued Nearby Interconnection Projects Included

Request	Size (MW)	Generator Model	Point of Interconnection
ASGI-2012-002	18	Vestas 1.65MW V82	Clovis 115kV (524808)
GEN-2013-016	191 Summer 203 Winter	GENROU (583456)	Tuco 345kV (525832)
ASGI-2013-002	18.4	Siemens 2.3MW VS (583613)	Tucumcari 115kV (524509)
ASGI-2013-003	18.4	Siemens 2.3MW VS (583623)	Clovis 115kV (524808)
ASGI-2013-005	19.8	Vestas V82 1.65MW (583283)	FE-Clovis 115kV (524808)
ASGI-2013-006	2	Gamesa G114 2MW (583813)	Erskine 115kV (526109)
GEN-2013-022	25	Solaron 500kW (583313)	Caprock 115kV (524486)
GEN-2014-012	186 Summer 225 Winter	GENROU (528607)	Tap Hobbs to Andrews 230kV in 2015 Tap Hobbs to Andrews 345kV in 2025
ASGI-2014-001	2.3	GE 107m 2.3MW (583816)	Erskine 69kV (526109)
GEN-2014-033	70	GE LV5 inverter	Chaves County 115kV
GEN-2014-034	70	GE LV5 inverter	Chaves County 115kV
GEN-2014-035	30	GE LV5 inverter	Chaves County 115kV
GEN-2014-047	40	AE 500NX 0.5 MW PV inverters	Tap Tolk - Eddy County (Crossroads) 345kV
GEN-2014-053	80	GE 2.0MW WTG	Carlisle 230kV
GEN-2014-054	120	GE 2.0MW WTG	Carlisle 230kV
GEN-2014-066	30	AE 1000NX 1.0MW PV inverter	Norton 115kV
ASGI-2014-002	49.6	SMA 1.6MVA 630CP-US inverters	Santa Rosa tap - Tucumcari 69kV line
ASGI-2014-005	10	Solar PV inverter	Strata 69 kV - bus 528046
ASGI-2014-008	10	Solar PV inverter	South Loving 69 kV - bus 528218
ASGI-2014-009	10	Solar PV inverter	Wood Draw 115 kV - bus 528228
ASGI-2014-010	10	Solar PV inverter	Ochoa 115 kV - bus 528232
ASGI-2014-012	10	Solar PV inverter	Cooper Ranch 115 kV - bus 528554

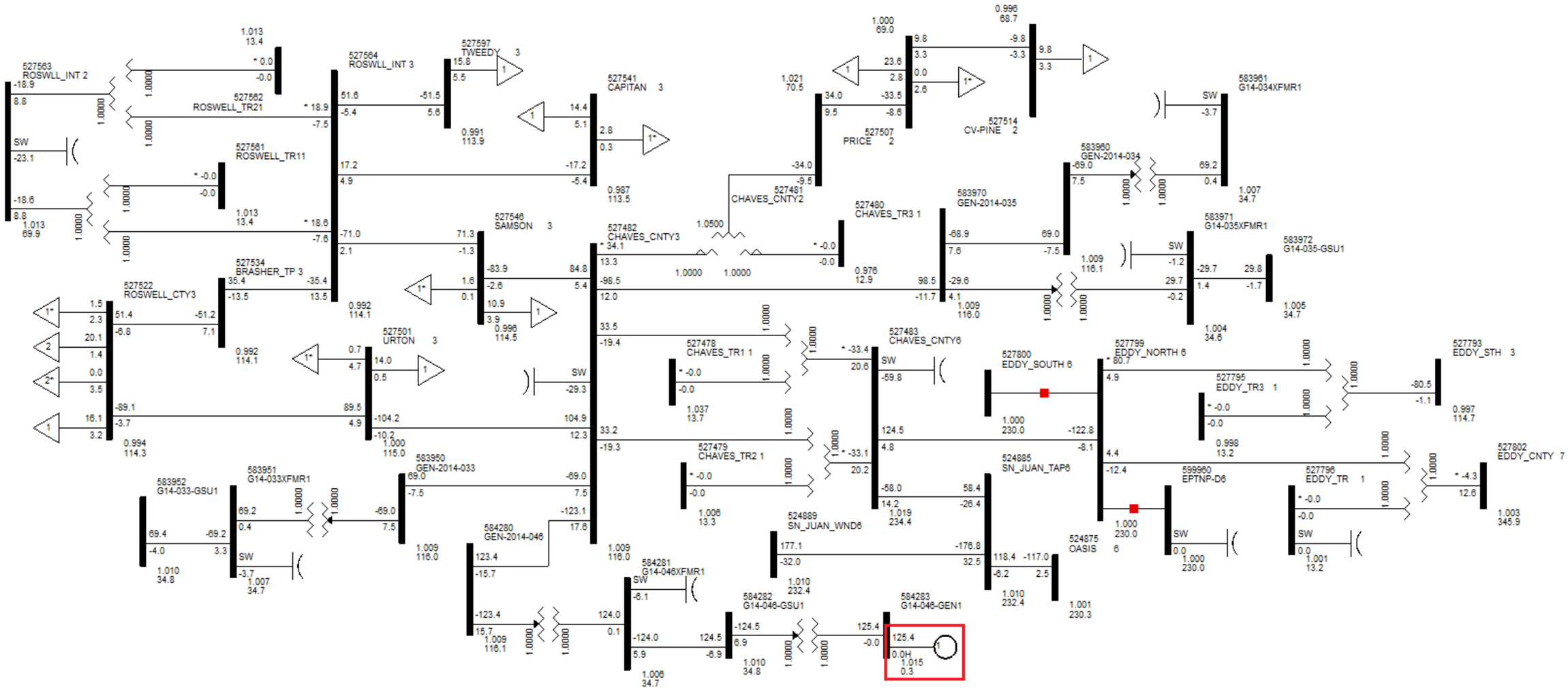

Figure 2-1. Power flow one-line diagram for interconnection project at the Chaves County 115 kV POI (GEN-2014-046)

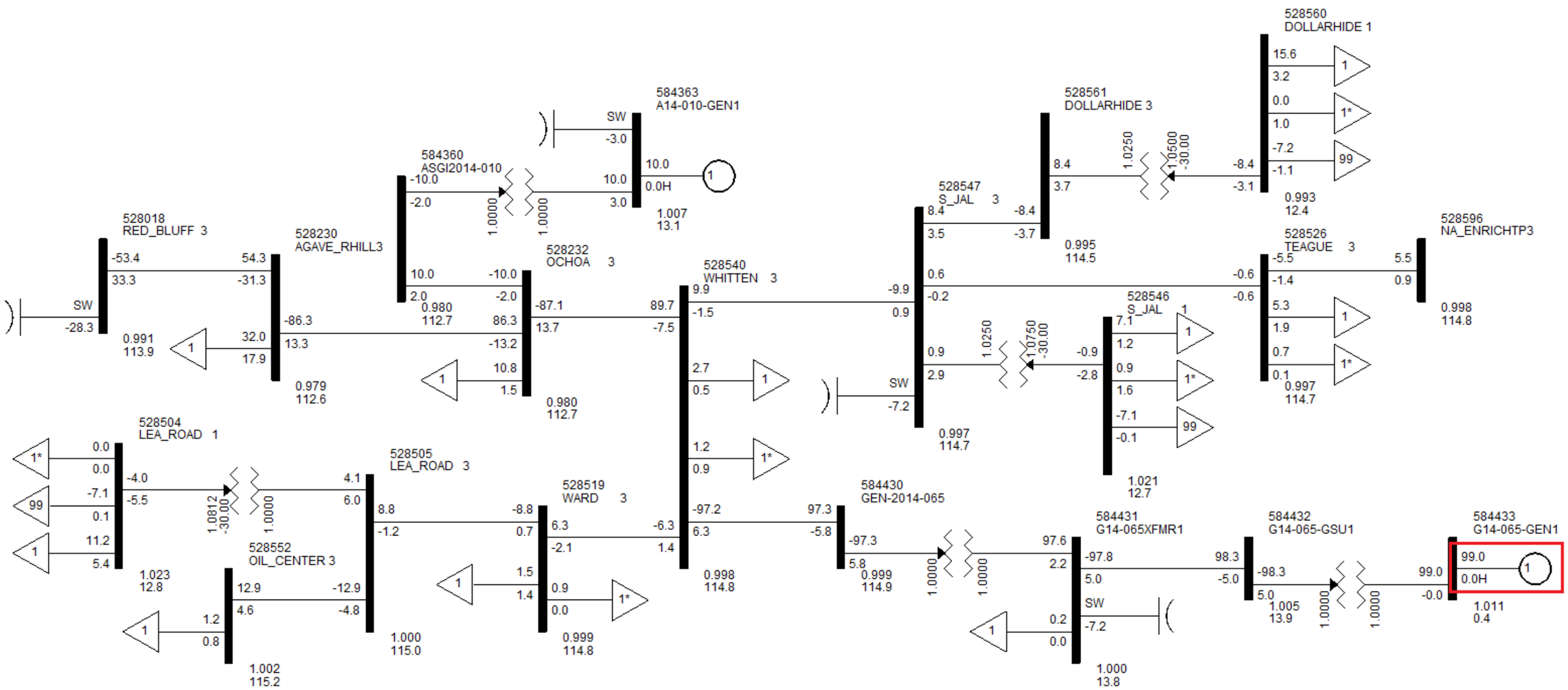

Figure 2-2. Power flow one-line diagram for interconnection project at the Whitten 115 kV POI (GEN-2014-065)

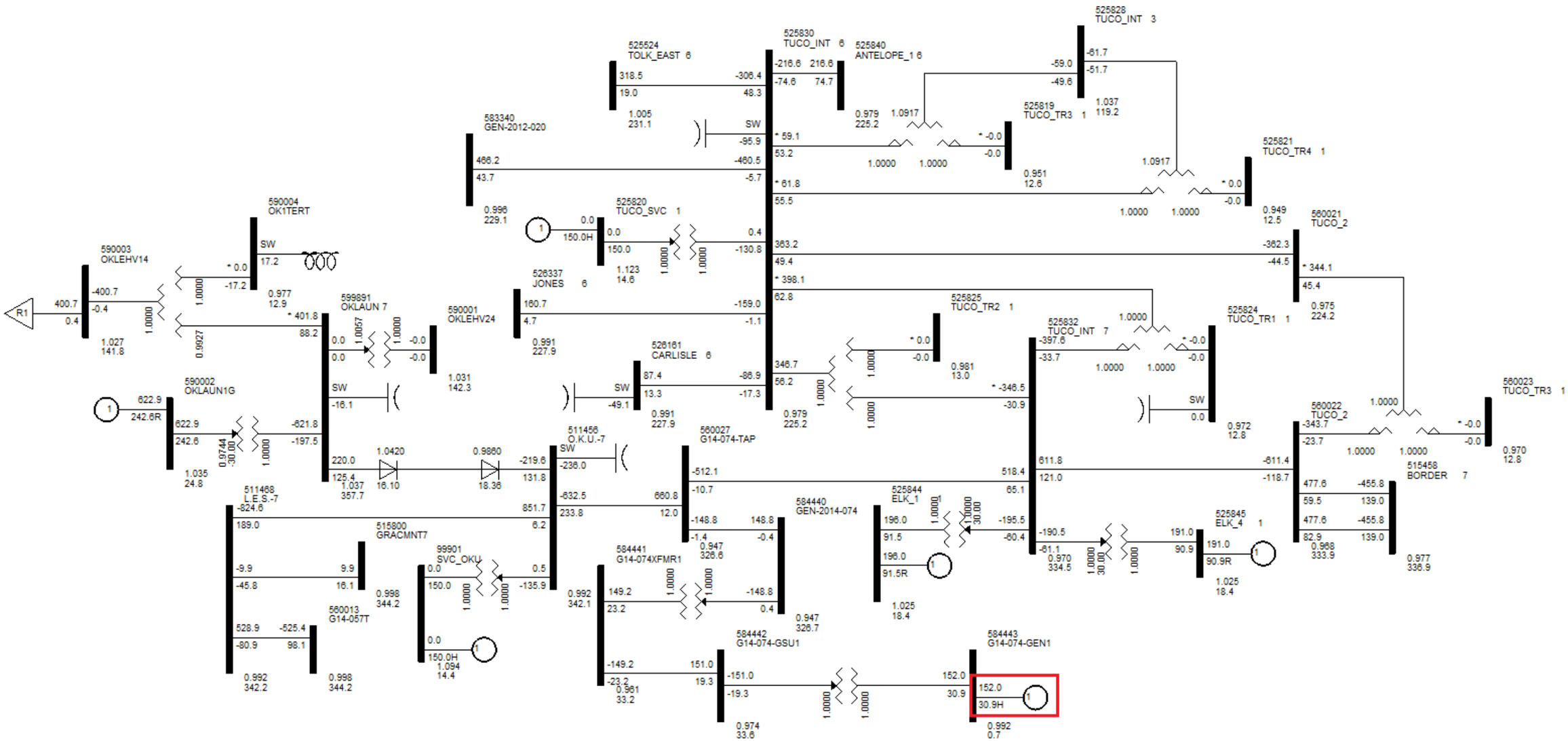

Figure 2-3. Power flow one-line diagram for interconnection project at the Tuco – OKU 345 kV POI (GEN-2014-074)

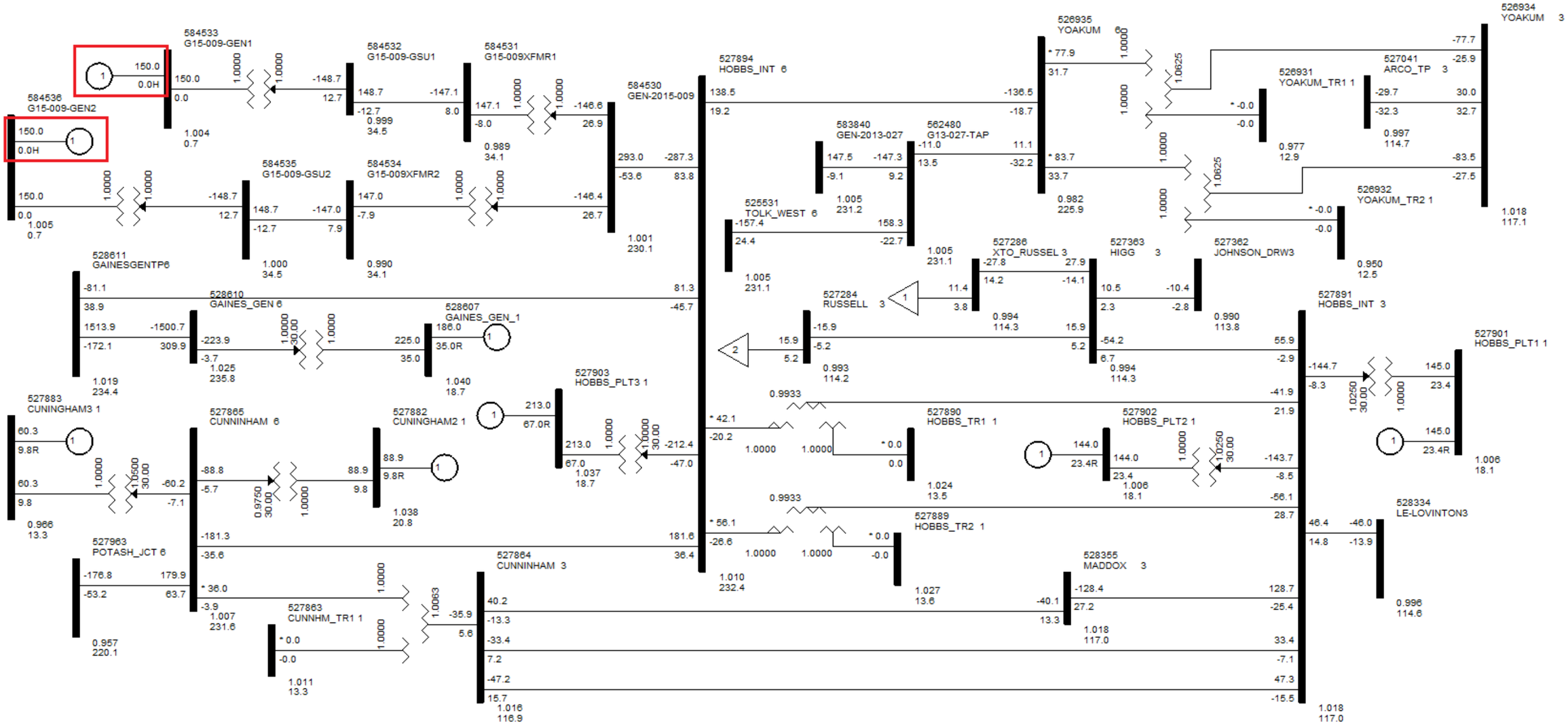

Figure 2-4. Power flow one-line diagram for interconnection project at the Hobbs 230 kV POI (GEN-2015-009)

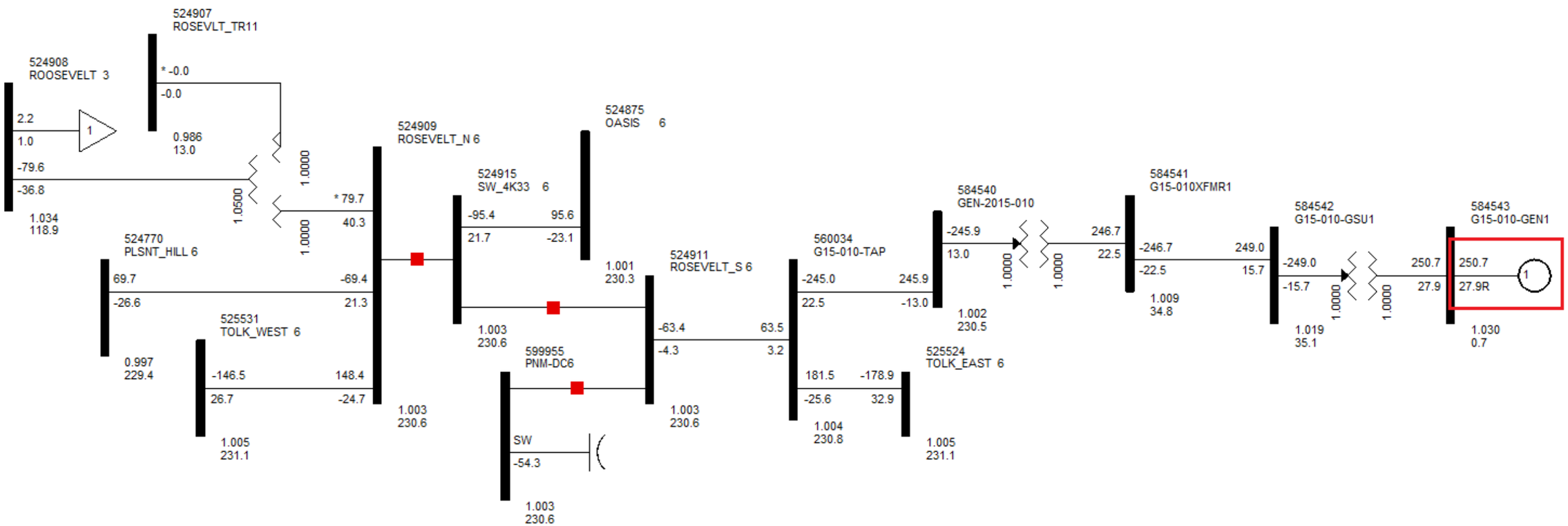

Figure 2-5. Power flow one-line diagram for interconnection project at the Roosevelt South to Tolk East 230 kV POI (GEN-2015-010)

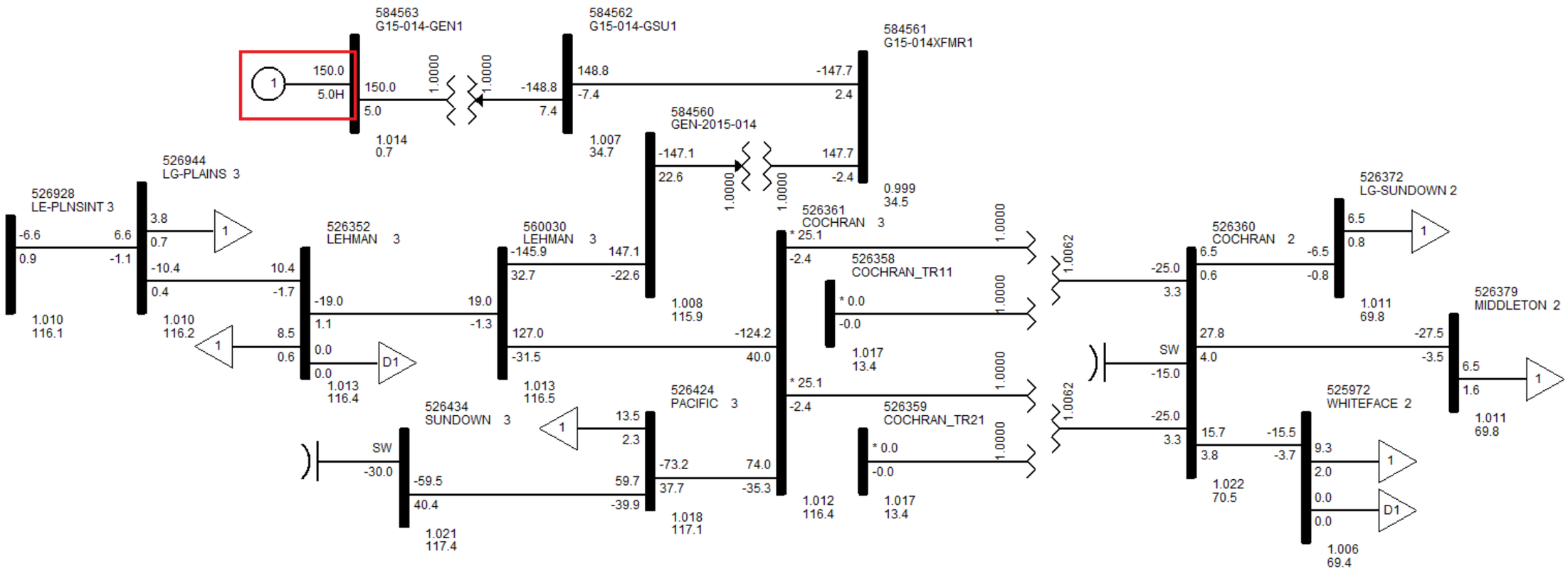

Figure 2-6. Power flow one-line diagram for interconnection project at the Cochran – LG Plains 115 kV POI (GEN-2015-014)

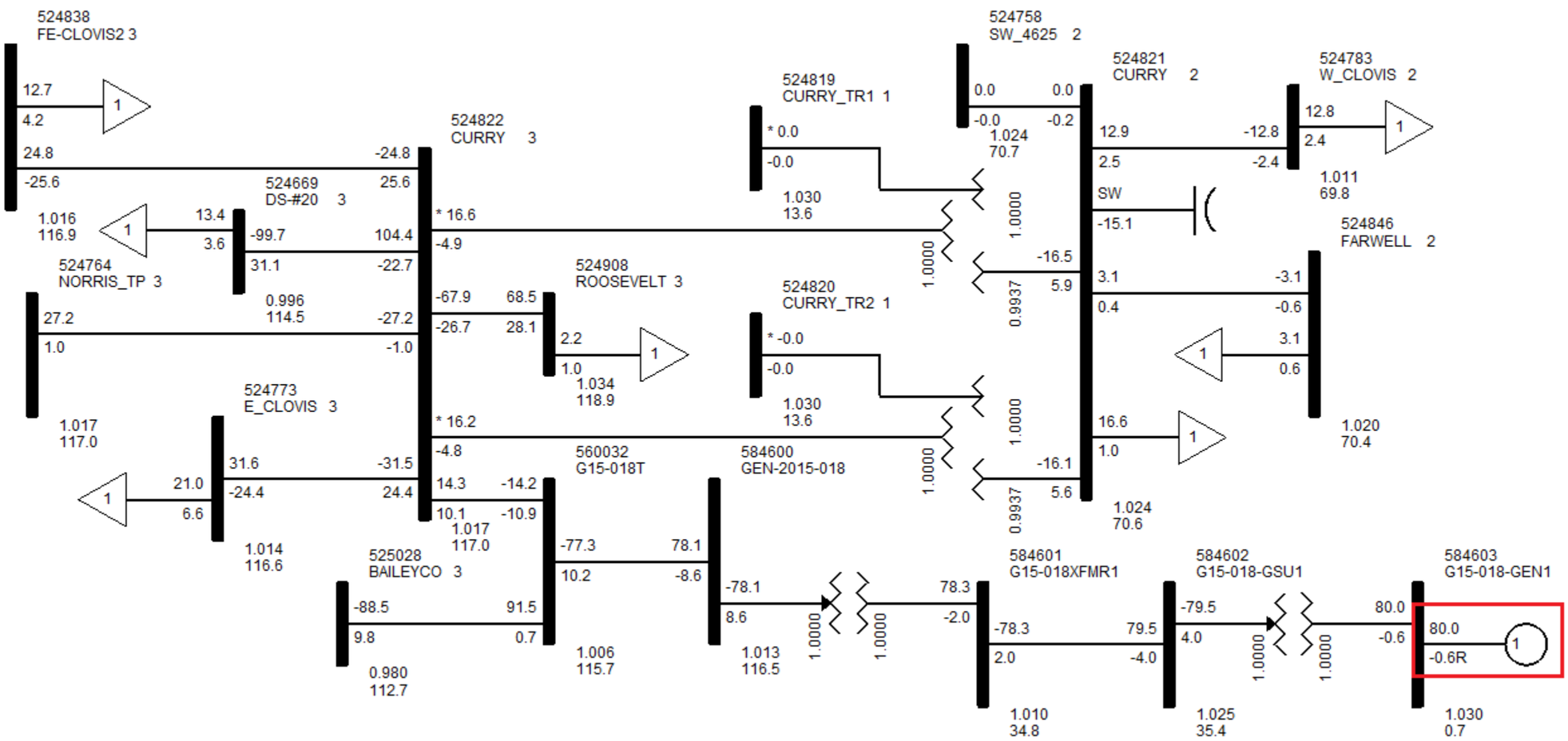

Figure 2-7. Power flow one-line diagram for interconnection project at the Curry County to Bailey County 115 kV POI (GEN-2015-018)

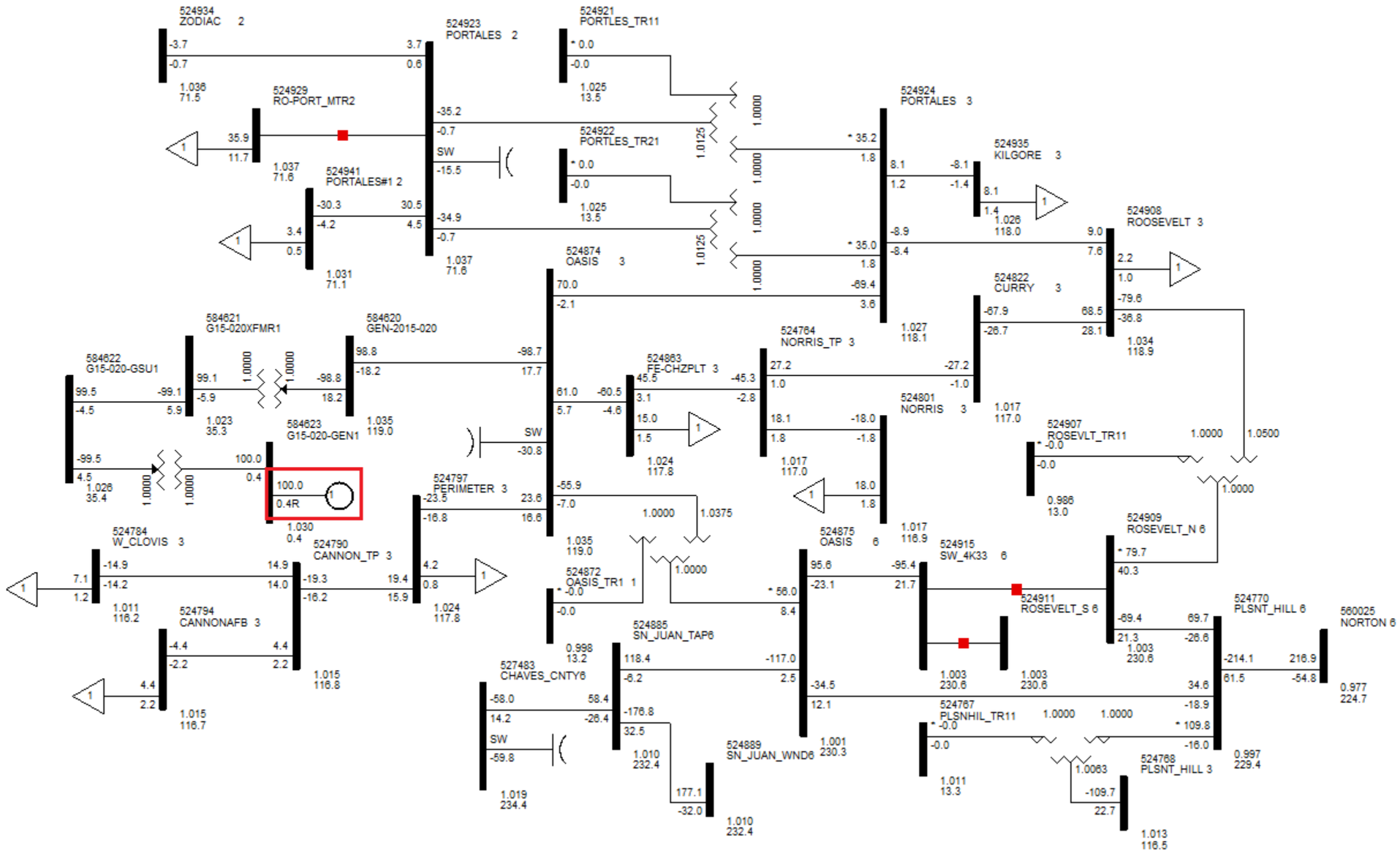
524934
ZODIAC 2
524923
PORTALES 2
524921
PORTLES_TR11
524929
RO-PORT_MTR2
524922
PORTLES_TR21
524941
PORTALES#1 2
524924
PORTALES 3
524935
KILGORE 3
524908
ROOSEVELT 3
524874
OASIS 3
524822
CURRY 3
584621
G15-020XFMR1
584620
GEN-2015-020
584622
G15-020-GSU1
524764
NORRIS_TP 3
524863
FE-CHZPLT 3
524801
NORRIS 3
584623
G15-020-GEN1
524907
ROSEVLT_TR11
524797
PERIMETER 3
524784
W_CLOVIS 3
524790
CANNON_TP 3
524909
ROSEVELT_N 6
524875
OASIS 6
524915
SW_4K33 6
524872
OASIS_TR1 1
524794
CANNONAFB 3
524885
SN_JUAN_TAP6
524911
ROSEVELT_S 6
524770
PLSNT_HILL 6
560025
NORTON 6
527483
CHAVES_CNTY6
524767
PLSNHIL_TR11
524889
SN_JUAN_WND6
524768
PLSNT_HILL 3

Figure 2-8. Power flow one-line diagram for interconnection project at Oasis 115 kV POI (GEN-2015-020)

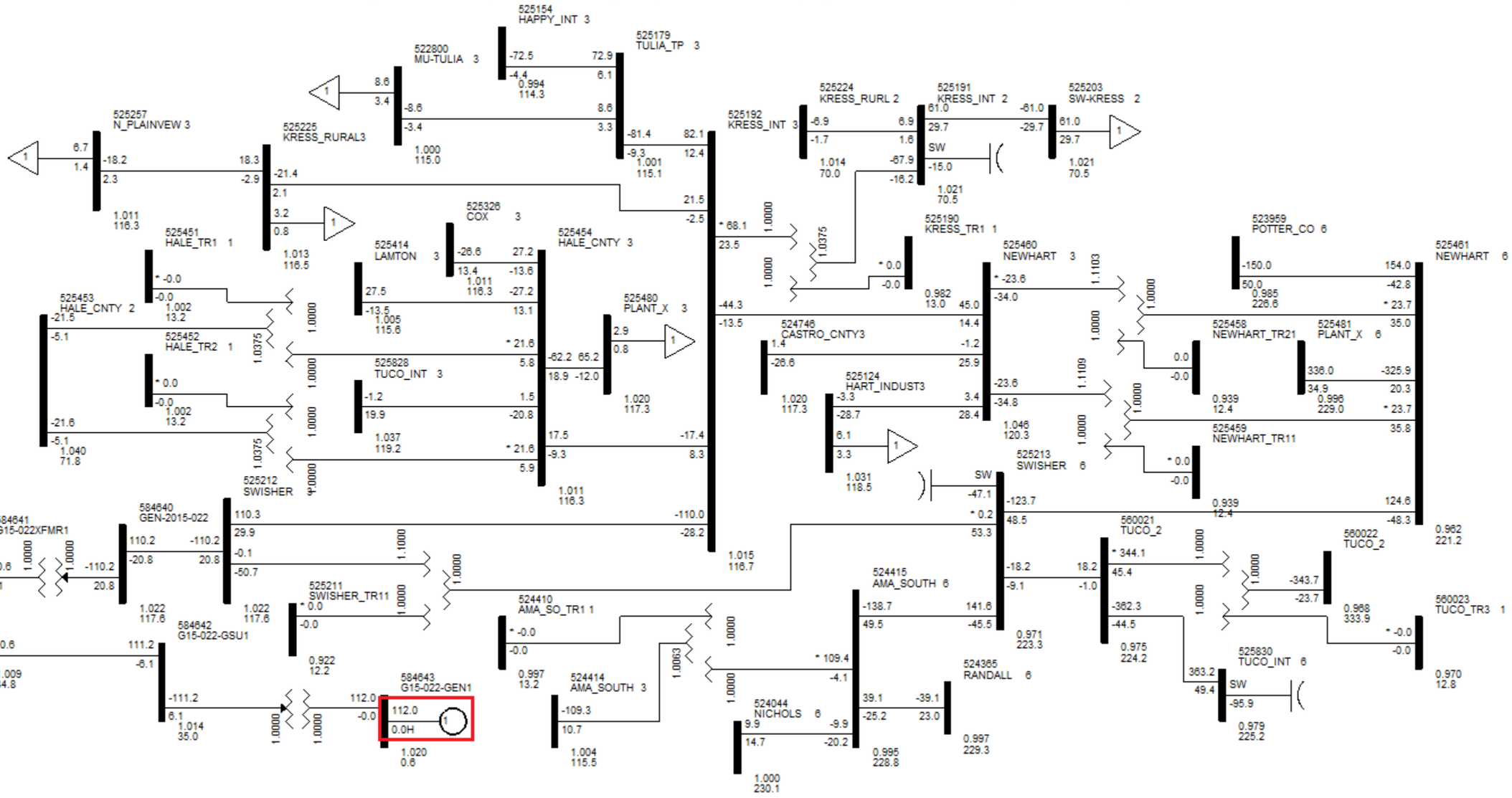

Figure 2-9. Power flow one-line diagram for interconnection project at Swisher 115 kV POI (GEN-2015-022)

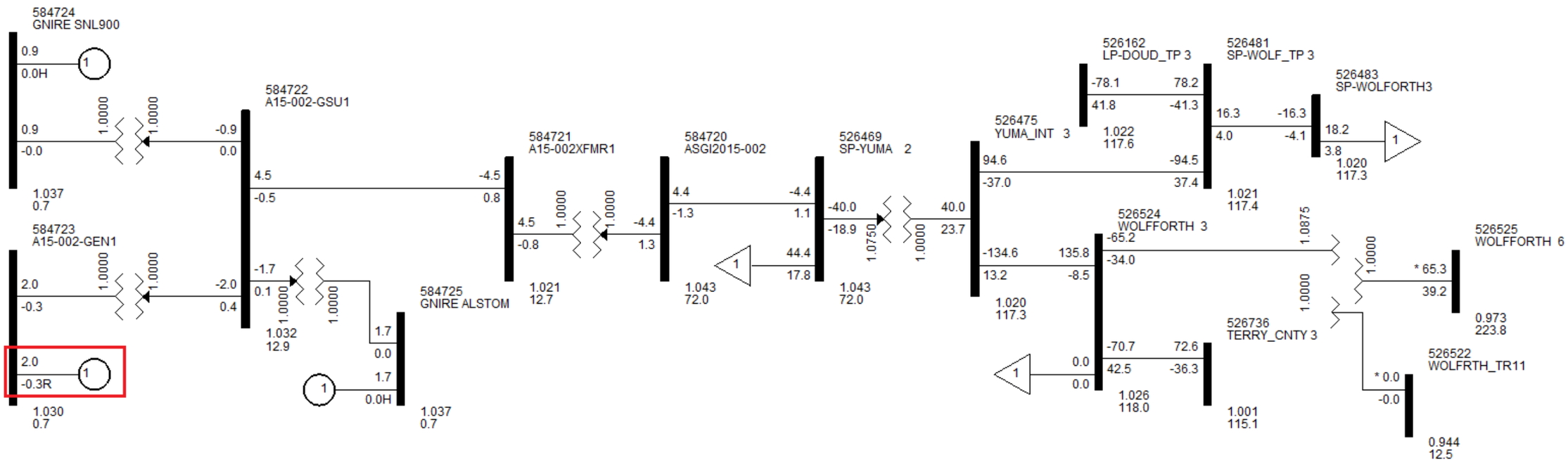

Figure 2-10. Power flow one-line diagram for interconnection project at Yuma Interchange 115/69 kV POI (ASGI-2015-002)

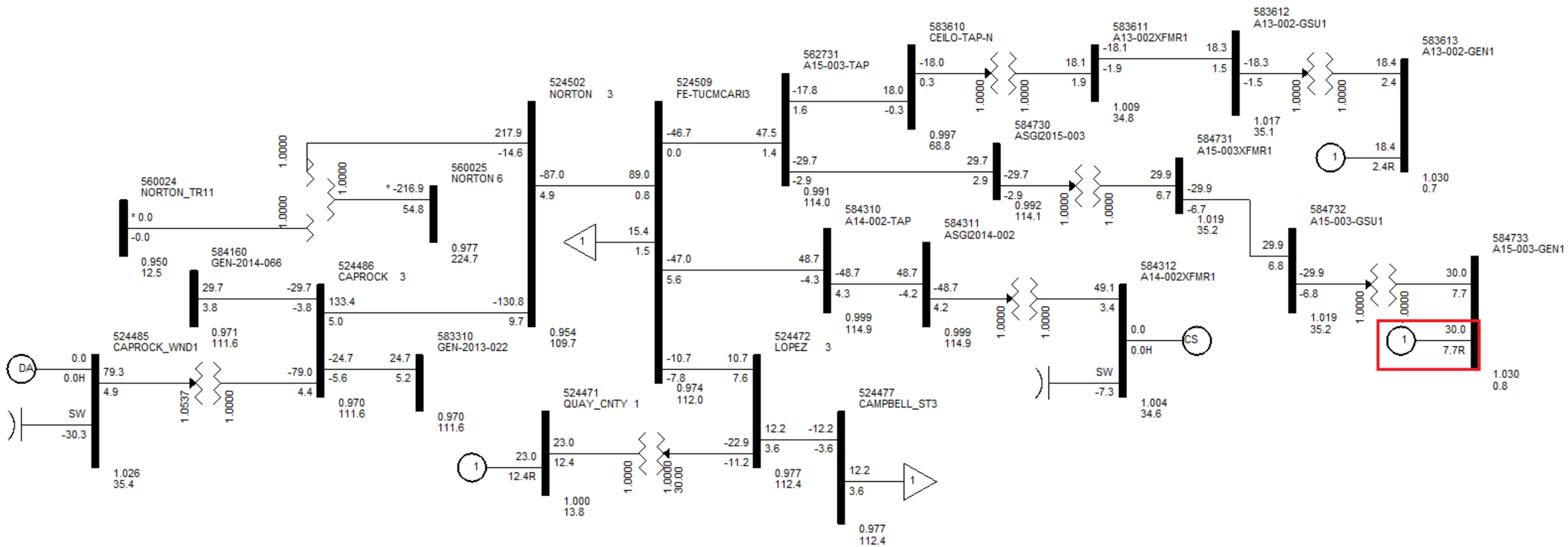

Figure 2-11. Power flow one-line diagram for interconnection project at FEC 115 kV New POI (ASGI-2015-003)

Table 2-3
Case List with Contingency Description

Cont. No.	Cont. Name	Description
1	FLT01-3PH	**3 phase fault on Chaves County 115kV (527482) to Samson 115kV (527546) CKT 1, near Chaves County.**
		a. Apply fault at the Chaves County 115kV bus.
		b. Clear fault after 5 cycles and trip the faulted line.
		c. Wait 20 cycles, and then re-close the line in (b) back into the fault.
		d. Leave fault on for 5 cycles, then trip the line in (b) and remove fault.
2	FLT02-3PH	**3 phase fault on Chaves County 115kV (527482) to Urton 115kV (527501) CKT 1, near Chaves County.**
		a. Apply fault at the Chaves County 115kV bus.
		b. Clear fault after 5 cycles and trip the faulted line.
		c. Wait 20 cycles, and then re-close the line in (b) back into the fault.
		d. Leave fault on for 5 cycles, then trip the line in (b) and remove fault.
3	FLT03-3PH	**3 phase fault on the Chaves County 115kV (527482) to Chaves County 230kV (527483) to Chaves County 13.2kV (527478) XFMR CKT 1, near Chaves County 115kV.**
		a. Apply fault at the Chaves County 115kV bus.
		b. Clear fault after 5 cycles and trip the faulted transformer.
4	FLT04-3PH	**3 phase fault on the Eddy North 115kV (527798) to Eddy South 230kV (527800) to Eddy 13.2kV (527797) XFMR CKT 1, near Eddy North 115kV.**
		a. Apply fault at the Eddy North 115kV bus.
		b. Clear fault after 5 cycles and trip the faulted transformer.
5	FLT05-3PH	**3 phase fault on Chaves County 230kV (527483) to San Juan Tap 230kV (524885) CKT 1, near Chaves County.**
		a. Apply fault at the Chaves County 230kV bus.
		b. Clear fault after 5 cycles and trip the faulted line.
		c. Wait 20 cycles, and then re-close the line in (b) back into the fault.
		d. Leave fault on for 5 cycles, then trip the line in (b) and remove fault.
6	FLT06-3PH	**3 phase fault on Chaves County 230kV (527483) to Eddy North 230kV (527799) CKT 1, near Chaves County.**
		a. Apply fault at the Chaves County 230kV bus.
		b. Clear fault after 5 cycles and trip the faulted line.
		c. Wait 20 cycles, and then re-close the line in (b) back into the fault.
		d. Leave fault on for 5 cycles, then trip the line in (b) and remove fault.
7	FLT07-3PH	**3 phase fault on the Eddy North 230kV (527799) to Eddy South 115kV (527793) to Eddy 13.2kV (527795) XFMR CKT 2, near Eddy North 230kV.**
		a. Apply fault at the Eddy North 230kV bus.
		b. Clear fault after 5 cycles and trip the faulted transformer.
8	FLT08-3PH	**3 phase fault on the Eddy North 230kV (527799) to Eddy County 345kV (527802) to Eddy 13.2kV (527796) XFMR CKT 1, near Eddy North 230kV.**
		a. Apply fault at the Eddy North 230kV bus.
		b. Clear fault after 5 cycles and trip the faulted transformer.
9	FLT09-3PH	**3 phase fault on Eddy South 230kV (527800) to Cunningham 230kV (527865) CKT 1, near Eddy South.**
		a. Apply fault at the Eddy South 230kV bus.
		b. Clear fault after 5 cycles and trip the faulted line.
		c. Wait 20 cycles, and then re-close the line in (b) back into the fault.
		d. Leave fault on for 5 cycles, then trip the line in (b) and remove fault.
10	FLT10-3PH	**3 phase fault on Eddy South 230kV (527800) to 7 Rivers 230kV (528095) CKT 1, near Eddy South.**
		a. Apply fault at the Eddy South 230kV bus.
		b. Clear fault after 5 cycles and trip the faulted line.
		c. Wait 20 cycles, and then re-close the line in (b) back into the fault.
		d. Leave fault on for 5 cycles, then trip the line in (b) and remove fault.
11	FLT11-3PH	**3 phase fault on the 7Rivers 230kV (528095) to 7Rivers 115kV (528094) to 7Rivers 13.2kV (528090) XFMR CKT 1, near 7Rivers 230kV.**
		a. Apply fault at the 7Rivers 230kV bus.
		b. Clear fault after 5 cycles and trip the faulted transformer.

Table 2-3 (Continued)
Case List with Contingency Description

Cont. No.	Cont. Name	Description
12	FLT12-3PH	**3 phase fault on the Pecos 230kV (528179) to Pecos 115kV (528178) to Pecos 13.2kV (528176) XFMR CKT 1, near Pecos 230kV.**
		a. Apply fault at the Pecos 230kV bus.
		b. Clear fault after 5 cycles and trip the faulted transformer.
13	FLT13-3PH	**3 phase fault on the Potash 230kV (527963) to Potash 115kV (527962) to Potash 13.2kV (527958) XFMR CKT 1, near Potash 230kV.**
		a. Apply fault at the Potash 230kV bus.
		b. Clear fault after 5 cycles and trip the faulted transformer.
14	FLT14-3PH	**3 phase fault on Cunningham 230kV (527865) to Potash Jct 230kV (527963) CKT 1, near Cunnigham.**
		a. Apply fault at the Cunningham 230kV bus.
		b. Clear fault after 5 cycles and trip the faulted line.
		c. Wait 20 cycles, and then re-close the line in (b) back into the fault.
		d. Leave fault on for 5 cycles, then trip the line in (b) and remove fault.
15	FLT15-3PH	**3 phase fault on Cunningham 230kV (527865) to Hobbs 230kV (527894) CKT 1, near Cunnigham.**
		a. Apply fault at the Cunningham 230kV bus.
		b. Clear fault after 5 cycles and trip the faulted line.
		c. Wait 20 cycles, and then re-close the line in (b) back into the fault.
		d. Leave fault on for 5 cycles, then trip the line in (b) and remove fault.
16	FLT16-3PH	**3 phase fault on the Cunningham 230kV (527865) to Cunningham 115kV (527864) to Cunningham 13.2kV (527863) XFMR CKT 1, near Cunningham 230kV.**
		a. Apply fault at the Cunningham 230kV bus.
		b. Clear fault after 5 cycles and trip the faulted transformer.
17	FLT22-3PH	**3 phase fault on Potash Jct 115kV (527962) to PCA 115kV (527930) CKT 1, near Potash Jct.**
		a. Apply fault at the Potash Jct 115kV bus.
		b. Clear fault after 5 cycles and trip the faulted line.
		c. Wait 20 cycles, and then re-close the line in (b) back into the fault.
		d. Leave fault on for 5 cycles, then trip the line in (b) and remove fault.
18	FLT23-3PH	**3 phase fault on Potash Jct 115kV (527962) to Carlsbad 115kV (528160) CKT 1, near Potash Jct.**
		a. Apply fault at the Potash Jct 115kV bus.
		b. Clear fault after 5 cycles and trip the faulted line.
		c. Wait 20 cycles, and then re-close the line in (b) back into the fault.
		d. Leave fault on for 5 cycles, then trip the line in (b) and remove fault.
19	FLT24-3PH	**3 phase fault on Potash Jct 115kV (527962) to Intrepdw Tap 115kV (527999) CKT 1, near Potash Jct.**
		a. Apply fault at the Potash Jct 115kV bus.
		b. Clear fault after 5 cycles and trip the faulted line.
		c. Wait 20 cycles, and then re-close the line in (b) back into the fault.
		d. Leave fault on for 5 cycles, then trip the line in (b) and remove fault.
20	FLT25-3PH	**3 phase fault on the Potash Jct 115kV (527962) to Potash Jct 69kV (527961) to Potash Jct 13.2kV (527959) XFMR CKT 1, near Potash Jct 115kV.**
		a. Apply fault at the Potash Jct 115kV bus.
		b. Clear fault after 5 cycles and trip the faulted transformer.
21	FLT28-3PH	**3 phase fault on Red Bluff (A14-009) 115kV (528018) to Sand Dunes 115kV (528016) CKT 1, near Red Bluff.**
		a. Apply fault at the Red Bluff 115kV bus.
		b. Clear fault after 5 cycles and trip the faulted line.
		c. Wait 20 cycles, and then re-close the line in (b) back into the fault.
		d. Leave fault on for 5 cycles, then trip the line in (b) and remove fault.
22	FLT29-3PH (2015WP & 2025SP Only)	**3 phase fault on Red Bluff (A14-009) 115kV (528018) to Road Runner 115kV (528025) CKT 1, near Red Bluff.**
		a. Apply fault at the Red Bluff 115kV bus.
		b. Clear fault after 5 cycles and trip the faulted line.
		c. Wait 20 cycles, and then re-close the line in (b) back into the fault.
		d. Leave fault on for 5 cycles, then trip the line in (b) and remove fault.

Table 2-3 (Continued)
Case List with Contingency Description

Cont. No.	Cont. Name	Description
23	FLT30-3PH (2015WP & 2025SP Only)	**3 phase fault on Road Runner 115kV (528025) to Agave 115kV (528230) CKT 1, near Road Runner.**
		a. Apply fault at the Road Runner 115kV bus.
		b. Clear fault after 5 cycles and trip the faulted line.
		c. Wait 20 cycles, and then re-close the line in (b) back into the fault.
		d. Leave fault on for 5 cycles, then trip the line in (b) and remove fault.
24	FLT31-3PH (2015WP & 2025SP Only)	**3 phase fault on the Road Runner 115kV (528025) to Road Runner 230kV (528027) Road Runner 13.2kV (528023) XFMR CKT 1, near Road Runner 115kV.**
		a. Apply fault at the Road Runner 115kV bus.
		b. Clear fault after 5 cycles and trip the faulted transformer.
25	FLT33-3PH	**3 phase fault on Ochoa 115kV (528232) to Whitten 115kV (528540) CKT 1, near Ochoa**
		a. Apply fault at the Ochoa 115kV bus.
		b. Clear fault after 5 cycles and trip the faulted line.
		c. Wait 20 cycles, and then re-close the line in (b) back into the fault.
		d. Leave fault on for 5 cycles, then trip the line in (b) and remove fault.
26	FLT34-3PH	**3 phase fault on Whitten 115kV (528540) to Ward 115kV (528519) CKT 1, near Whitten**
		a. Apply fault at the Whitten 115kV bus.
		b. Clear fault after 5 cycles and trip the faulted line.
		c. Wait 20 cycles, and then re-close the line in (b) back into the fault.
		d. Leave fault on for 5 cycles, then trip the line in (b) and remove fault.
27	FLT35-3PH	**3 phase fault on Whitten 115kV (528540) to S_Jal 115kV (528547) CKT 1, near Whitten**
		a. Apply fault at the Whitten 115kV bus.
		b. Clear fault after 5 cycles and trip the faulted line.
		c. Wait 20 cycles, and then re-close the line in (b) back into the fault.
		d. Leave fault on for 5 cycles, then trip the line in (b) and remove fault.
28	FLT38-3PH	**3 phase fault on Cunningham 115kV (527864) to Hobbs 115kV (527891) CKT 1, near Cunningham.**
		a. Apply fault at the Cunningham 115kV bus.
		b. Clear fault after 5 cycles and trip the faulted line.
		c. Wait 20 cycles, and then re-close the line in (b) back into the fault.
		d. Leave fault on for 5 cycles, then trip the line in (b) and remove fault.
29	FLT42-3PH	**3 phase fault on Cunningham 115kV (527864) to Monument Tap 115kV (528568) CKT 1, near Cunningham.**
		a. Apply fault at the Cunningham 115kV bus.
		b. Clear fault after 5 cycles and trip the faulted line.
		c. Wait 20 cycles, and then re-close the line in (b) back into the fault.
		d. Leave fault on for 5 cycles, then trip the line in (b) and remove fault.
30	FLT45-3PH	**3 phase fault on Maddox 115kV (528355) to Pearle 115kV (528392) CKT 1, near Maddox.**
		a. Apply fault at the Maddox 115kV bus.
		b. Clear fault after 5 cycles and trip the faulted line.
		c. Wait 20 cycles, and then re-close the line in (b) back into the fault.
		d. Leave fault on for 5 cycles, then trip the line in (b) and remove fault.
31	FLT46-3PH	**3 phase fault on Maddox 115kV (528355) to Sanger SW 115kV (528463) CKT 1, near Maddox.**
		a. Apply fault at the Maddox 115kV bus.
		b. Clear fault after 5 cycles and trip the faulted line.
		c. Wait 20 cycles, and then re-close the line in (b) back into the fault.
		d. Leave fault on for 5 cycles, then trip the line in (b) and remove fault.
32	FLT47-3PH	**3 phase fault on Maddox 115kV (528355) to Monument 115kV (528491) CKT 1, near Maddox.**
		a. Apply fault at the Maddox 115kV bus.
		b. Clear fault after 5 cycles and trip the faulted line.
		c. Wait 20 cycles, and then re-close the line in (b) back into the fault.
		d. Leave fault on for 5 cycles, then trip the line in (b) and remove fault.

Table 2-3 (Continued)
Case List with Contingency Description

Cont. No.	Cont. Name	Description
33	FLT48-3PH	**3 phase fault on G08-022 Tap 345kV (560007) to Eddy County 345kV (527802) CKT 1, near G08-022 Tap.**
		a. Apply fault at the G08-022 Tap 345kV bus.
		b. Clear fault after 5 cycles and trip the faulted line.
		c. Wait 20 cycles, and then re-close the line in (b) back into the fault.
		d. Leave fault on for 5 cycles, then trip the line in (b) and remove fault.
34	FLT49-3PH	**3 phase fault on G08-022 Tap 345kV (560007) to Tolk 345kV (525549) CKT 1, near G08-022 Tap.**
		a. Apply fault at the G08-022 Tap 345kV bus.
		b. Clear fault after 5 cycles and trip the faulted line.
		c. Wait 20 cycles, and then re-close the line in (b) back into the fault.
		d. Leave fault on for 5 cycles, then trip the line in (b) and remove fault.
35	FLT50-3PH	**3 phase fault on the Tolk Tap 230kV (525543) to Tolk 345kV (525549) to Tolk 13.2kV (525537) XFMR CKT 1, near Tolk Tap 230kV.**
		a. Apply fault at the Tolk Tap 230kV bus.
		b. Clear fault after 5 cycles and trip the faulted transformer.
36	FLT51-3PH	**3 phase fault on the GEN-2013-027 (562480) to Tolk West (525531) 230 kV line, near GEN-2013-027.**
		a. Apply fault at the GEN-2013-027 230 kV bus.
		b. Clear fault after 5 cycles by tripping the faulted line.
		c. Wait 20 cycles, and then re-close the line in (b) back into the fault.
		d. Leave fault on for 5 cycles, then trip the line in (b) and remove fault.
37	FLT52-SB	**Single phase fault with stuck breaker on the Tolk West (525531) to GEN-2013-027 (562480) 230 kV line, near Tolk West.**
		a. Apply fault at the Tolk West 230 kV bus.
		b. Run 5 cycles, and then open GEN-2013-027 end of the faulted line.
		c. Run 10 cycles, and then clear the fault and disconnect Tolk West 230kV bus (525531).
38	FLT53-3PH	**3 phase fault on the GEN-2013-027 (562480) to Yoakum (526935) 230 kV line, near GEN-2013-027.**
		a. Apply fault at the GEN-2013-027 230 kV bus.
		b. Clear fault after 5 cycles by tripping the faulted line.
		c. Wait 20 cycles, and then re-close the line in (b) back into the fault.
		d. Leave fault on for 5 cycles, then trip the line in (b) and remove fault.
39	FLT54-SB	**Single phase fault with stuck breaker on the Yoakum (526935) to GEN-2013-027 (562480) 230 kV line, near Yoakum.**
		a. Apply fault at the Yoakum 230kV bus.
		b. Run 5 cycles, and then open GEN-2013-027 end of the faulted line.
		c. Run 10 cycles, and then clear the fault and open Yoakum end of the line in (b) and trip Yoakum (526935) to Yoakum 115 (526934)/13.2 kV (526931) transformer circuit #1.
40	FLT55-3PH	**3 phase fault on the Yoakum (526935) to Amoco-SS (526460) 230 kV line, near Yoakum.**
		a. Apply fault at the Yoakum 230 kV bus.
		b. Clear fault after 5 cycles by tripping the faulted line.
		c. Wait 20 cycles, and then re-close the line in (b) back into the fault.
		d. Leave fault on for 5 cycles, then trip the line in (b) and remove fault.
41	FLT56-3PH	**3 phase fault on the Yoakum (526935) to OxyBru Tap (527010) 230 kV line, near Yoakum.**
		a. Apply fault at the Yoakum 230 kV bus.
		b. Clear fault after 5 cycles by tripping the faulted line.
		c. Wait 20 cycles, and then re-close the line in (b) back into the fault.
		d. Leave fault on for 5 cycles, then trip the line in (b) and remove fault.
42	FLT57-3PH	**3 phase fault on the Yoakum (526935) to Mustang (527149) 230 kV line, near Yoakum.**
		a. Apply fault at the Yoakum 230 kV bus.
		b. Clear fault after 5 cycles by tripping the faulted line.
		c. Wait 20 cycles, and then re-close the line in (b) back into the fault.
		d. Leave fault on for 5 cycles, then trip the line in (b) and remove fault.

Table 2-3 (Continued)
Case List with Contingency Description

Cont. No.	Cont. Name	Description
43	FLT58-3PH	**3 phase fault on the Yoakum (526935) to Hobbs (527894) 230 kV line, near Yoakum.**
		a. Apply fault at the Yoakum 230 kV bus.
		b. Clear fault after 5 cycles by tripping the faulted line.
		c. Wait 20 cycles, and then re-close the line in (b) back into the fault.
		d. Leave fault on for 5 cycles, then trip the line in (b) and remove fault.
44	FLT59-3PH	**3 phase fault on the Yoakum 230 kV (526935) to Yoakum 115 kV (526934)/13.2 kV (526934) transformer circuit #1, near Yoakum.**
		a. Apply fault at the Yoakum 230 kV bus.
		b. Clear fault after 5 cycles by tripping the faulted transformer and remove fault.
45	FLT60-PO	**(Prior Outage) Yoakum (526935) – Amoco-SS (526460) 230 kV out of service then 3 phase fault on the Yoakum 230 kV (526935) to Yoakum 115 kV (526934)/13.2 kV (526934) transformer circuit #1, near Yoakum.**
		Switch Yoakum (526935) – Amoco-SS (526460) out of service then solve.
		a. Apply fault at the Yoakum 230 kV bus.
		b. Clear fault after 5 cycles by tripping the faulted transformer and remove fault.
46	FLT61-SB	**Single phase fault with stuck breaker on the Yoakum (526935) to Amoco-SS (526460) 230 kV line, near Yoakum.**
		a. Apply fault at the Yoakum 230kV bus.
		b. Run 5 cycles, and then open Amoco-SS end of the faulted line.
		c. Run 10 cycles, and then clear the fault and trip Yoakum 230 kV (526935) bus.
47	FLT62-3PH	**3 phase fault on Tolk West 230kV (525531) to Roosevelt 230kV (524909) CKT 1, near Tolk West.**
		a. Apply fault at the Tolk West 230kV bus.
		b. Clear fault after 5 cycles and trip the faulted line.
		c. Wait 20 cycles, and then re-close the line in (b) back into the fault.
		d. Leave fault on for 5 cycles, then trip the line in (b) and remove fault.
48	FLT63-SB	**Single phase fault with stuck breaker on the Tolk West (525531) to Roosevelt N (524909) 230kV line CKT , near Tolk West.**
		a. Apply fault at the Tolk West 230kV bus.
		b. Run 5 cycles, and then open Roosevelt N end of the faulted line.
		c. Run 10 cycles, and then clear the fault and disconnect Tolk West 230kV bus (525531).
49	FLT64-3PH	**3 phase fault on the Tolk West (525531) to Plant X (525481) 230kV circuit #1 line, near Tolk West.**
		a. Apply fault at the Tolk West 230kV bus.
		b. Clear fault after 5 cycles by tripping the faulted line.
		c. Wait 20 cycles, and then re-close the line in (b) back into the fault.
		d. Leave fault on for 5 cycles, then trip the line in (b) and remove fault.
50	FLT65-SB	**Single phase fault with stuck breaker on the Tolk West (525531) to Plant X (525481) 230kV circuit #1 line, near Tolk West.**
		a. Apply fault at the Tolk West 230kV bus.
		b. Run 5 cycles, and then open Plant X end of the faulted line.
		c. Run 10 cycles, and then clear the fault and disconnect Tolk West 230kV bus (525531).
51	FLT67-3PH	**3 phase fault on the Tolk West (525531) to Lamb Co (525637) 230kV line, near Tolk West.**
		a. Apply fault at the Tolk West 230kV bus.
		b. Clear fault after 5 cycles by tripping the faulted line.
		c. Wait 20 cycles, and then re-close the line in (b) back into the fault.
		d. Leave fault on for 5 cycles, then trip the line in (b) and remove fault.
52	FLT68-SB	**Single phase fault with stuck breaker on the Tolk West (525531) to Lamb Co (525637) 230kV line, near Tolk West.**
		a. Apply fault at the Tolk West 230kV bus.
		b. Run 5 cycles, and then open Lamb Co end of the faulted line.
		c. Run 10 cycles, and then clear the fault and disconnect Tolk West 230kV bus (525531).

Table 2-3 (Continued)
Case List with Contingency Description

Cont. No.	Cont. Name	Description
53	FLT69-PO	**(Prior Outage) Tolk West (525531) – Plant X (525481) 230kV circuit #1 out of service then 3 phase fault on the Tolk East 230kV (525524) to Plant X (525481) 230kV circuit #2, near Tolk East.**
		Switch Tolk West (525531) – Plant X (525481) 230kV circuit #1 out of service then solve.
		a. Apply fault at the Tolk East 230kV bus.
		b. Clear fault after 5 cycles by tripping the faulted line.
54	FLT70-SB	**Single phase fault with stuck breaker on the Tolk East (525524) to Plant X (525481) 230kV line circuit #2, near Tolk East.**
		a. Apply fault at the Tolk East 230kV bus.
		b. Run 5 cycles, and then open Plant X end of the faulted line.
		c. Run 10 cycles, and then clear the fault and disconnect Tolk East 230kV bus (525524).
55	FLT71-3PH	**3 phase fault on the SP-Erskine (526109) to Indiana (526146) 115kV line, near SP-Erskine.**
		a. Apply fault at the near SP-Erskine 115kV bus.
		b. Clear fault after 5 cycles by tripping the faulted line.
		c. Wait 20 cycles, and then re-close the line in (b) back into the fault.
		d. Leave fault on for 5 cycles, then trip the line in (b) and remove fault.
56	FLT72-3PH	**3 phase fault on the SP-Erskine (526109) to Carlisle (526160) 115kV line, near SP-Erskine.**
		a. Apply fault at the near SP-Erskine 115kV bus.
		b. Clear fault after 5 cycles by tripping the faulted line.
		c. Wait 20 cycles, and then re-close the line in (b) back into the fault.
		d. Leave fault on for 5 cycles, then trip the line in (b) and remove fault.
57	FLT73-3PH	**3 phase fault on the Tuco (525828) to Hale County (525454) 115kV line circuit 1, near Tuco.**
		a. Apply fault at the Tuco 115kV bus.
		b. Clear fault after 5 cycles by tripping the faulted line.
		c. Wait 20 cycles, and then re-close the line in (b) back into the fault.
		d. Leave fault on for 5 cycles, then trip the line in (b) and remove fault.
58	FLT74-3PH	**3 phase fault on the Tuco (525828) to Floyd County (525780) 115kV line circuit 1, near Tuco.**
		a. Apply fault at the Tuco 115kV bus.
		b. Clear fault after 5 cycles by tripping the faulted line.
		c. Wait 20 cycles, and then re-close the line in (b) back into the fault.
		d. Leave fault on for 5 cycles, then trip the line in (b) and remove fault.
59	FLT75-3PH	**3 phase fault on the Tuco (525828) to Stanton West (526076) 115kV line circuit 1, near Tuco.**
		a. Apply fault at the Tuco 115kV bus.
		b. Clear fault after 5 cycles by tripping the faulted line.
		c. Wait 20 cycles, and then re-close the line in (b) back into the fault.
		d. Leave fault on for 5 cycles, then trip the line in (b) and remove fault.
60	FLT76-3PH	**3 phase fault on the Tuco (525828) to Lubbock West (526298) 115kV line circuit 1, near Tuco.**
		a. Apply fault at the Tuco 115kV bus.
		b. Clear fault after 5 cycles by tripping the faulted line.
		c. Wait 20 cycles, and then re-close the line in (b) back into the fault.
		d. Leave fault on for 5 cycles, then trip the line in (b) and remove fault.
61	FLT77-3PH	**3 phase fault on the Carlisle (526160) to LP-Doud Tap (526162) 115kV line circuit 1, near Carlisle.**
		a. Apply fault at the Carlisle 115kV bus.
		b. Clear fault after 5 cycles by tripping the faulted line.
		c. Wait 20 cycles, and then re-close the line in (b) back into the fault.
		d. Leave fault on for 5 cycles, then trip the line in (b) and remove fault.
62	FLT78-3PH	**3 phase fault on the Carlisle (526160) to Murphy (526192) 115kV line circuit 1, near Carlisle.**
		a. Apply fault at the Carlisle 115kV bus.
		b. Clear fault after 5 cycles by tripping the faulted line.
		c. Wait 20 cycles, and then re-close the line in (b) back into the fault.
		d. Leave fault on for 5 cycles, then trip the line in (b) and remove fault.

Table 2-3 (Continued)
Case List with Contingency Description

Cont. No.	Cont. Name	Description
63	FLT79-3PH	**3 phase fault on the Carlisle (526161) to LP-Milwaukee (522823) 230kV line circuit 1, near Carlisle.**
		a. Apply fault at the Carlisle 115kV bus.
		b. Clear fault after 5 cycles by tripping the faulted line.
		c. Wait 20 cycles, and then re-close the line in (b) back into the fault.
		d. Leave fault on for 5 cycles, then trip the line in (b) and remove fault.
64	FLT80-3PH	**3 phase fault on the Carlisle (526161) to Tuco (525830) 230kV line circuit 1, near Carlisle.**
		a. Apply fault at the Carlisle 230kV bus.
		b. Clear fault after 5 cycles by tripping the faulted line.
		c. Wait 20 cycles, and then re-close the line in (b) back into the fault.
		d. Leave fault on for 5 cycles, then trip the line in (b) and remove fault.
65	FLT81-3PH	**3 phase fault on the Carlisle (526160) 115kV to Carlisle (526161) 230kV/(526157) 13.2kV ckt 1 transformer at the 115kV bus.**
		a. Apply fault at the Carlisle 115kV bus.
		b. Clear fault after 5 cycles by tripping the transformer
66	FLT82-3PH	**3 phase fault on the Tuco (525828) 115kV to Tuco (525830) 230kV/(525821) 13.2kV ckt 1 transformer at the 115kV bus.**
		a. Apply fault at the Tuco 115kV bus.
		b. Clear fault after 5 cycles by tripping the transformer
67	FLT88-3PH	**3 phase fault on the Tuco (525832) 345kV to Tuco (525830) 230kV/(525824) 13.2kV ckt 1 transformer at the 345kV bus.**
		a. Apply fault at the Tuco 345kV bus.
		b. Clear fault after 5 cycles by tripping the transformer
68	FLT90-3PH	**3 phase fault on the Tuco (525830) to Tolk East (525524) 230kV line circuit 1, near Tuco.**
		a. Apply fault at the Tuco 230kV bus.
		b. Clear fault after 5 cycles by tripping the faulted line.
		c. Wait 20 cycles, and then re-close the line in (b) back into the fault.
		d. Leave fault on for 5 cycles, then trip the line in (b) and remove fault.
69	FLT91-3PH	**3 phase fault on the Tuco (525830) to Jones (526337) 230kV line circuit 1, near Tuco.**
		a. Apply fault at the Tuco 230kV bus.
		b. Clear fault after 5 cycles by tripping the faulted line.
		c. Wait 20 cycles, and then re-close the line in (b) back into the fault.
		d. Leave fault on for 5 cycles, then trip the line in (b) and remove fault.
70	FLT93-3PH	**3 phase fault on the Jones (526337) to LP-Holly (522870) 230kV line circuit 1, near Jones.**
		a. Apply fault at the Jones 230kV bus.
		b. Clear fault after 5 cycles by tripping the faulted line.
71	FLT94-3PH	**3 phase fault on the Jones (526337) to Lubbock South (526269) 230kV line circuit 2, near Jones.**
		a. Apply fault at the Jones 230kV bus.
		b. Clear fault after 5 cycles by tripping the faulted line.
72	FLT95-3PH	**3 phase fault on the Jones (526337) to Lubbock East (526299) 230kV line circuit 1, near Jones.**
		a. Apply fault at the Jones 230kV bus.
		b. Clear fault after 5 cycles by tripping the faulted line.
73	FLT96-3PH	**3 phase fault on the Jones (526337) to Grassland (526677) 230kV line circuit 1, near Jones.**
		a. Apply fault at the Jones 230kV bus.
		b. Clear fault after 5 cycles by tripping the faulted line.
74	FLT97-3PH	**3 phase fault on the Swisher (525213) to Amarillo South (524415) 230kV line circuit 1, near Swisher.**
		a. Apply fault at the Swisher 230kV bus.
		b. Clear fault after 5 cycles by tripping the faulted line.
		c. Wait 20 cycles, and then re-close the line in (b) back into the fault.
		d. Leave fault on for 5 cycles, then trip the line in (b) and remove fault.

Table 2-3 (Continued)
Case List with Contingency Description

Cont. No.	Cont. Name	Description
75	FLT98-PO	**(Prior Outage) TUCO (525830) 230kV to TUCO (525828) 115kV/(525819) 13.2kV transformer CKT 2. Then 3 phase fault on the TUCO (525830) 230kV to TUCO (525828) 115kV/(525821) 13.2kV transformer CKT 1, near TUCO 115kV.**
		a. Prior outage TUCO (525830) 230kV to TUCO (525828) 115kV/(525819) 13.2kV transformer CKT 2 (solve network for steady state solution).
		b. 3 phase fault on the TUCO (525830) 230kV to TUCO (525828) 115kV/(525821) 13.2kV transformer CKT 1, near TUCO 115kV.
		c. Leave fault on for 5 cycles, then trip the faulted transformer.
76	FLT99-3PH	**3 phase fault on the Norton (524502) to FE-Tucumcari (524509) 115kV line, near Norton.**
		a. Apply fault at the Norton 115kV bus.
		b. Clear fault after 5 cycles by tripping the faulted line.
77	FLT100-3PH	**3 phase fault on the Pleasant Hill (524768) to E Clovis (524773) 115kV line, near Pleasant Hill.**
		a. Apply fault at the Pleasant Hill 115kV bus.
		b. Clear fault after 5 cycles by tripping the faulted line.
		c. Wait 20 cycles, and then re-close the line in (b) back into the fault.
		d. Leave fault on for 5 cycles, then trip the line in (b) and remove fault.
78	FLT101-3PH	**3 phase fault on the Pleasant Hill (524768) to N Clovis Tap (524776) 115kV line, near Pleasant Hill.**
		a. Apply fault at the Pleasant Hill 115kV bus.
		b. Clear fault after 5 cycles by tripping the faulted line.
		c. Wait 20 cycles, and then re-close the line in (b) back into the fault.
		d. Leave fault on for 5 cycles, then trip the line in (b) and remove fault.
79	FLT102-3PH	**3 phase fault on the Pleasant Hill (524768) to FE-Holland (524773) 115kV line, near Pleasant Hill.**
		a. Apply fault at the Pleasant Hill 115kV bus.
		b. Clear fault after 5 cycles by tripping the faulted line.
		c. Wait 20 cycles, and then re-close the line in (b) back into the fault.
		d. Leave fault on for 5 cycles, then trip the line in (b) and remove fault.
80	FLT103-3PH	**3 phase fault on the Pleasant Hill (524770) 230kV to Pleasant Hill (524768) 115kV/(524767) 13.2kV transformer, near Pleasant Hill 230kV.**
		a. Apply fault at the Pleasant Hill 230kV bus.
		b. Clear fault after 5 cycles by tripping the faulted transformer.
81	FLT104-3PH	**3 phase fault on the Pleasant Hill (524770) to Oasis (524875) 230kV line, near Pleasant Hill.**
		a. Apply fault at the Pleasant Hill 230kV bus.
		b. Clear fault after 5 cycles by tripping the faulted line.
		c. Wait 20 cycles, and then re-close the line in (b) back into the fault.
		d. Leave fault on for 5 cycles, then trip the line in (b) and remove fault.
82	FLT105-3PH	**3 phase fault on the Pleasant Hill (524770) to Roosevelt (524909) 230kV line, near Pleasant Hill.**
		a. Apply fault at the Pleasant Hill 230kV bus.
		b. Clear fault after 5 cycles by tripping the faulted line.
		c. Wait 20 cycles, and then re-close the line in (b) back into the fault.
		d. Leave fault on for 5 cycles, then trip the line in (b) and remove fault.
83	FLT106-3PH	**3 phase fault on the Oasis (524875) 230kV to Oasis (524874) 115kV/(524872) 13.2kV transformer, near Oasis 230kV.**
		a. Apply fault at the Oasis 230kV bus.
		b. Clear fault after 5 cycles by tripping the faulted transformer.
84	FLT107-3PH	**3 phase fault on the FE-Clovis Int (524808) to N Clovis Tap (524776) 115kV line, near FE-Clovis Int.**
		a. Apply fault at the near FE-Clovis Int 115kV bus.
		b. Clear fault after 5 cycles by tripping the faulted line.
		c. Wait 20 cycles, and then re-close the line in (b) back into the fault.
		d. Leave fault on for 5 cycles, then trip the line in (b) and remove fault.

Table 2-3 (Continued)
Case List with Contingency Description

Cont. No.	Cont. Name	Description
85	FLT108-3PH	**3 phase fault on the FE-Clovis Int (524808) to W Clovis (524784) 115kV line, near FE-Clovis Int.**
		a. Apply fault at the near FE-Clovis Int 115kV bus.
		b. Clear fault after 5 cycles by tripping the faulted line.
		c. Wait 20 cycles, and then re-close the line in (b) back into the fault.
		d. Leave fault on for 5 cycles, then trip the line in (b) and remove fault.
86	FLT111-SB	**Single phase fault with stuck breaker on the Potash Jct (527962) to Carlsbad (528160) 115kV circuit #1 line, near Potash Jct.**
		a. Apply fault at the Potash Jct 115kV bus.
		b. Run 5 cycles, and then open Carlsbad end of the faulted line.
		c. Run 13 cycles, and then clear the fault and Potash Jct(527962) bus.
87	FLT116-3PH	**3 phase fault on the Tuco (525832) to Tuco_2 (560022) 345kV line circuit 1, near Tuco.**
		a. Apply fault at the Tuco (525832) 345kV bus.
		b. Clear fault after 5 cycles by tripping the faulted line.
		c. Wait 20 cycles, and then re-close the line in (b) back into the fault.
		d. Leave fault on for 5 cycles, then trip the line in (b) and remove fault.
88	FLT117-3PH (2020WP&SP and 2025SP)	**3 phase fault on the Tuco (525832) to Yoakam (526936) 345kV line circuit 1, near Tuco.**
		a. Apply fault at the Tuco (525832) 345kV bus.
		b. Clear fault after 5 cycles by tripping the faulted line.
		c. Wait 20 cycles, and then re-close the line in (b) back into the fault.
		d. Leave fault on for 5 cycles, then trip the line in (b) and remove fault.
89	FLT 122 3PH	**3 phase fault on the FE-Tucumcari (524509) to Lopez (524472) 115 kV line, near FE-Tucumcari.**
		a. Apply fault at the FE-Tucumcari 345kV bus.
		b. Clear fault after 5 cycles by tripping the faulted line.
90	FLT123-3PH	**3 phase fault on the Tolk (525549) to Potter County (523961) 345 kV line, near Tolk.**
		a. Apply fault at the Tolk 345kV bus.
		b. Clear fault after 5 cycles by tripping the faulted line.
		c. Wait 20 cycles, and then re-close the line in (b) back into the fault.
		d. Leave fault on for 5 cycles, then trip the line in (b) and remove fault.
91	FLT125-3PH	**3 phase fault on the Potter County (523961) to GEN-2014-038-Tap (560011) 345 kV line, near Potter County.**
		a. Apply fault at the Potter County 345kV bus.
		b. Clear fault after 5 cycles by tripping the faulted line.
		c. Wait 20 cycles, and then re-close the line in (b) back into the fault.
		d. Leave fault on for 5 cycles, then trip the line in (b) and remove fault.
92	FLT126-3PH	**3 phase fault on the Potter County 345kV (523961) to 230kV (523959) to 13.2kV (523957) transformer, near Potter County 345kV.**
		a. Apply fault at the Potter County 345kV bus.
		b. Clear fault after 5 cycles by tripping the faulted transformer.
93	FLT129-3PH (2020SP, 2025SP, all standalone cases)	**3 phase fault on the Border (515458) to Tuco2 (560022) 345kV line circuit 1, near Border.**
		a. Apply fault at the Border 345kV bus.
		b. Clear fault after 5 cycles by tripping the faulted line.
		c. Wait 20 cycles, and then re-close the line in (b) back into the fault.
		d. Leave fault on for 5 cycles, then trip the line in (b) and remove fault.
94	FLT130-3PH (2015WP&SP and 2020WP)	**3 phase fault on the Border (515458) to Chisholm (511553) 345kV line circuit 1, near Border.**
		a. Apply fault at the Border 345kV bus.
		b. Clear fault after 5 cycles by tripping the faulted line.
		c. Wait 20 cycles, and then re-close the line in (b) back into the fault.
		d. Leave fault on for 5 cycles, then trip the line in (b) and remove fault.
95	FLT132-3PH	**3 phase fault on the Yuma (526475) to SP-Wolforth Tap (526481) 115kV line circuit 1, near Yuma.**
		a. Apply fault at the Yuma 115kV bus.
		b. Clear fault after 5 cycles by tripping the faulted line.
		c. Wait 20 cycles, and then re-close the line in (b) back into the fault.
		d. Leave fault on for 5 cycles, then trip the line in (b) and remove fault.

Table 2-3 (Continued)
Case List with Contingency Description

Cont. No.	Cont. Name	Description
96	FLT133-3PH	**3 phase fault on the Yuma (526475) to Wolfforth (526524) 115kV line circuit 1, near Yuma.**
		a. Apply fault at the Yuma 115kV bus.
		b. Clear fault after 5 cycles by tripping the faulted line.
		c. Wait 20 cycles, and then re-close the line in (b) back into the fault.
		d. Leave fault on for 5 cycles, then trip the line in (b) and remove fault.
97	FLT134-3PH	**3 phase fault on the SP-Wolfforth (526481) to LP-Doud Tap (526162) 115kV line circuit 1, near SP-Wolfforth.**
		a. Apply fault at the SP-Wolfforth 115kV bus.
		b. Clear fault after 5 cycles by tripping the faulted line.
		c. Wait 20 cycles, and then re-close the line in (b) back into the fault.
		d. Leave fault on for 5 cycles, then trip the line in (b) and remove fault.
98	FLT135-3PH	**3 phase fault on the Carlisle (526160) 115kV to Carlisle (526159) 69kV/(526158) 13.2kV transformer, near Carlisle 115kV.**
		a. Apply fault at the Carlisle 115kV bus.
		b. Clear fault after 5 cycles by tripping the faulted transformer.
99	FLT136-3PH (2020WP&SP and 2025SP)	**3 phase fault on the Carlisle (526161) to Wolfforth (526525) 230kV line circuit 1, near Carlisle.**
		a. Apply fault at the Carlisle 230kV bus.
		b. Clear fault after 5 cycles by tripping the faulted line.
		c. Wait 20 cycles, and then re-close the line in (b) back into the fault.
		d. Leave fault on for 5 cycles, then trip the line in (b) and remove fault.
100	FLT137-3PH	**3 phase fault on the Lubbock South (526268) to SP-Woodrow (526602) 115kV line circuit 1, near Lubbock South.**
		a. Apply fault at the Lubbock South 115kV bus.
		b. Clear fault after 5 cycles by tripping the faulted line.
		c. Wait 20 cycles, and then re-close the line in (b) back into the fault.
		d. Leave fault on for 5 cycles, then trip the line in (b) and remove fault.
101	FLT138-3PH	**3 phase fault on the Lubbock South (526268) 115kV to Lubbock South (526267) 69kV/(526266) 13.2kV transformer, near Lubbock South 115kV.**
		a. Apply fault at the Lubbock South 115kV bus.
		b. Clear fault after 5 cycles by tripping the faulted transformer.
102	FLT139-3PH	**3 phase fault on the Lubbock South (526268) 115kV to Lubbock South (526269) 230kV/(526265) 13.2kV transformer, near Lubbock South 115kV.**
		a. Apply fault at the Lubbock South 115kV bus.
		b. Clear fault after 5 cycles by tripping the faulted transformer.
103	FLT140-3PH	**3 phase fault on the LP-Wolforth (526524) to Terry County (526736) 115kV line circuit 1, near LP-Wolforth.**
		a. Apply fault at the LP-Wolforth 115kV bus.
		b. Clear fault after 5 cycles by tripping the faulted line.
		c. Wait 20 cycles, and then re-close the line in (b) back into the fault.
		d. Leave fault on for 5 cycles, then trip the line in (b) and remove fault.
104	FLT141-3PH	**3 phase fault on the LP-Wolforth (526524) 115kV to Wolforth (526525) 230kV/(526522) 13.2kV transformer, near LP-Wolforth 115kV.**
		a. Apply fault at the LP-Wolforth 115kV bus.
		b. Clear fault after 5 cycles by tripping the faulted transformer.
105	FLT142-3PH	**3 phase fault on the Wolforth (526525) to Lubbock South (526269) 230kV line circuit 1, near Wolforth.**
		a. Apply fault at the Wolforth 230kV bus.
		b. Clear fault after 5 cycles by tripping the faulted line.
		c. Wait 20 cycles, and then re-close the line in (b) back into the fault.
		d. Leave fault on for 5 cycles, then trip the line in (b) and remove fault.
106	FLT143-3PH	**3 phase fault on the Wolforth (526525) to Sundown (526435) 230kV line circuit 1, near Wolforth.**
		a. Apply fault at the Wolforth 230kV bus.
		b. Clear fault after 5 cycles by tripping the faulted line.
		c. Wait 20 cycles, and then re-close the line in (b) back into the fault.
		d. Leave fault on for 5 cycles, then trip the line in (b) and remove fault.

Table 2-3 (Continued)
Case List with Contingency Description

Cont. No.	Cont. Name	Description
107	FLT144-3PH	**3 phase fault on the Terry County (526736) to LG-Clauene (526491) 115kV line circuit 1, near Terry County.**
		a. Apply fault at the Terry County 115kV bus.
		b. Clear fault after 5 cycles by tripping the faulted line.
		c. Wait 20 cycles, and then re-close the line in (b) back into the fault.
		d. Leave fault on for 5 cycles, then trip the line in (b) and remove fault.
108	FLT145-3PH	**3 phase fault on the Terry County (526736) to Prentice (526792) 115kV line circuit 1, near Terry County.**
		a. Apply fault at the Terry County 115kV bus.
		b. Clear fault after 5 cycles by tripping the faulted line.
		c. Wait 20 cycles, and then re-close the line in (b) back into the fault.
		d. Leave fault on for 5 cycles, then trip the line in (b) and remove fault.
109	FLT146-3PH	**3 phase fault on the Terry County (526736) to Denver North (527130) 115kV line circuit 1, near Terry County.**
		a. Apply fault at the Terry County 115kV bus.
		b. Clear fault after 5 cycles by tripping the faulted line.
		c. Wait 20 cycles, and then re-close the line in (b) back into the fault.
		d. Leave fault on for 5 cycles, then trip the line in (b) and remove fault.
110	FLT147-3PH	**3 phase fault on the Terry County (526736) to Sulphur (527262) 115kV line circuit 1, near Terry County.**
		a. Apply fault at the Terry County 115kV bus.
		b. Clear fault after 5 cycles by tripping the faulted line.
		c. Wait 20 cycles, and then re-close the line in (b) back into the fault.
		d. Leave fault on for 5 cycles, then trip the line in (b) and remove fault.
111	FLT148-3PH	**3 phase fault on the Terry County (526736) 115kV to Terry County (526735) 69kV/(526733) 13.2kV transformer, near Terry County 115kV.**
		a. Apply fault at the Terry County 115kV bus.
		b. Clear fault after 5 cycles by tripping the faulted transformer.
112	FLT149-3PH	**3 phase fault on the Oasis (524874) to Perimeter (524797) 115kV line circuit 1, near Oasis.**
		a. Apply fault at the Oasis 115kV bus.
		b. Clear fault after 5 cycles by tripping the faulted line.
		c. Wait 20 cycles, and then re-close the line in (b) back into the fault.
		d. Leave fault on for 5 cycles, then trip the line in (b) and remove fault.
113	FLT150-3PH	**3 phase fault on the Oasis (524874) to FE-Chzplt (524863) 115kV line circuit 1, near Oasis.**
		a. Apply fault at the Oasis 115kV bus.
		b. Clear fault after 5 cycles by tripping the faulted line.
		c. Wait 20 cycles, and then re-close the line in (b) back into the fault.
		d. Leave fault on for 5 cycles, then trip the line in (b) and remove fault.
114	FLT151-3PH	**3 phase fault on the Oasis (524874) to Portales (524924) 115kV line circuit 1, near Oasis.**
		a. Apply fault at the Oasis 115kV bus.
		b. Clear fault after 5 cycles by tripping the faulted line.
		c. Wait 20 cycles, and then re-close the line in (b) back into the fault.
		d. Leave fault on for 5 cycles, then trip the line in (b) and remove fault.
115	FLT152-3PH	**3 phase fault on the Portales (524924) to Roosevelt (524908) 115kV line circuit 1, near Oasis.**
		a. Apply fault at the Portales 115kV bus.
		b. Clear fault after 5 cycles by tripping the faulted line.
		c. Wait 20 cycles, and then re-close the line in (b) back into the fault.
		d. Leave fault on for 5 cycles, then trip the line in (b) and remove fault.
116	FLT153-3PH	**3 phase fault on the Portales (524924) 115kV to Portales (524923) 69kV/(524921) 13.2kV transformer, near Portales 115kV.**
		a. Apply fault at the Portales 115kV bus.
		b. Clear fault after 5 cycles by tripping the faulted transformer.

Table 2-3 (Continued)
Case List with Contingency Description

Cont. No.	Cont. Name	Description
117	FLT154-3PH	**3 phase fault on the Pleasant Hills (524768) to E_Clovis (524773) 115kV line circuit 1, near Pleasant Hills.**
		a. Apply fault at the Pleasant Hills 115kV bus.
		b. Clear fault after 5 cycles by tripping the faulted line.
		c. Wait 20 cycles, and then re-close the line in (b) back into the fault.
		d. Leave fault on for 5 cycles, then trip the line in (b) and remove fault.
118	FLT155-3PH	**3 phase fault on the FE-Curry (524822) to DS#20 (524669) 115kV line circuit 1, near FE-Curry.**
		a. Apply fault at the FE-Curry 115kV bus.
		b. Clear fault after 5 cycles by tripping the faulted line.
		c. Wait 20 cycles, and then re-close the line in (b) back into the fault.
		d. Leave fault on for 5 cycles, then trip the line in (b) and remove fault.
119	FLT156-3PH	**3 phase fault on the FE-Curry (524822) to Norris Tap (524764) 115kV line circuit 1, near FE-Curry.**
		a. Apply fault at the FE-Curry 115kV bus.
		b. Clear fault after 5 cycles by tripping the faulted line.
		c. Wait 20 cycles, and then re-close the line in (b) back into the fault.
		d. Leave fault on for 5 cycles, then trip the line in (b) and remove fault.
120	FLT157-3PH	**3 phase fault on the FE-Curry (524822) to E_Clovis (524773) 115kV line circuit 1, near FE-Curry.**
		a. Apply fault at the FE-Curry 115kV bus.
		b. Clear fault after 5 cycles by tripping the faulted line.
		c. Wait 20 cycles, and then re-close the line in (b) back into the fault.
		d. Leave fault on for 5 cycles, then trip the line in (b) and remove fault.
121	FLT158-3PH	**3 phase fault on the FE-Curry (524822) to FE_Clovis2 (524838) 115kV line circuit 1, near FE-Curry.**
		a. Apply fault at the FE-Curry 115kV bus.
		b. Clear fault after 5 cycles by tripping the faulted line.
		c. Wait 20 cycles, and then re-close the line in (b) back into the fault.
		d. Leave fault on for 5 cycles, then trip the line in (b) and remove fault.
122	FLT159-3PH	**3 phase fault on the FE-Curry (524822) to Roosevelt (524908) 115kV line circuit 2, near FE-Curry.**
		a. Apply fault at the FE-Curry 115kV bus.
		b. Clear fault after 5 cycles by tripping the faulted line.
		c. Wait 20 cycles, and then re-close the line in (b) back into the fault.
		d. Leave fault on for 5 cycles, then trip the line in (b) and remove fault.
123	FLT160-3PH	**3 phase fault on the FE-Curry (524822) to G15-018T (560032) 115kV line circuit 1, near FE-Curry.**
		a. Apply fault at the FE-Curry 115kV bus.
		b. Clear fault after 5 cycles by tripping the faulted line.
		c. Wait 20 cycles, and then re-close the line in (b) back into the fault.
		d. Leave fault on for 5 cycles, then trip the line in (b) and remove fault.
124	FLT161-3PH	**3 phase fault on the FE-Curry (524822) 115kV to Curry (524821) 69kV/(524819) 13.2kV transformer, near FE-Curry 115kV.**
		a. Apply fault at the FE-Curry 115kV bus.
		b. Clear fault after 5 cycles by tripping the faulted transformer.
125	FLT162-3PH	**3 phase fault on the G15-018T (560032) to FE-Bailey County (525028) 115kV line circuit 1, near G15-018T.**
		a. Apply fault at the G15-018T 115kV bus.
		b. Clear fault after 5 cycles by tripping the faulted line.
		c. Wait 20 cycles, and then re-close the line in (b) back into the fault.
		d. Leave fault on for 5 cycles, then trip the line in (b) and remove fault.
126	FLT163-3PH (2015WP, 2020WP&SP and 2025SP)	**3 phase fault on the EMU&VLY Tap (525019) to FE-Bailey County (525028) 115kV line circuit 1, near EMU&VLY Tap.**
		a. Apply fault at the EMU&VLY Tap 115kV bus.
		b. Clear fault after 5 cycles by tripping the faulted line.
		c. Wait 20 cycles, and then re-close the line in (b) back into the fault.
		d. Leave fault on for 5 cycles, then trip the line in (b) and remove fault.

Table 2-3 (Continued)
Case List with Contingency Description

Cont. No.	Cont. Name	Description
127	FLT164-3PH (2015WP, 2020WP&SP and 2025SP)	**3 phase fault on the EMU&VLY Tap (525019) to Plant X (525480) 115kV line circuit 1, near EMU&VLY Tap.**
		a. Apply fault at the EMU&VLY Tap 115kV bus.
		b. Clear fault after 5 cycles by tripping the faulted line.
		c. Wait 20 cycles, and then re-close the line in (b) back into the fault.
		d. Leave fault on for 5 cycles, then trip the line in (b) and remove fault.
128	FLT165-3PH	**3 phase fault on the Oasis (524875) to San Juan Tap (524885) 230kV line circuit 1, near Oasis.**
		a. Apply fault at the Oasis 230kV bus.
		b. Clear fault after 5 cycles by tripping the faulted line.
		c. Wait 20 cycles, and then re-close the line in (b) back into the fault.
		d. Leave fault on for 5 cycles, then trip the line in (b) and remove fault.
129	FLT166-3PH	**3 phase fault on the Oasis (524875) to SW_4k33 (524915) 230kV line circuit 1, near Oasis.**
		a. Apply fault at the Oasis 230kV bus.
		b. Clear fault after 5 cycles by tripping the faulted line.
		c. Wait 20 cycles, and then re-close the line in (b) back into the fault.
		d. Leave fault on for 5 cycles, then trip the line in (b) and remove fault.
130	FLT167-3PH	**3 phase fault on the Roosevelt_N (524909) to SW_4k33 (524915) 230kV line circuit 1, near Roosevelt_N.**
		a. Apply fault at the Roosevelt_N 230kV bus.
		b. Clear fault after 5 cycles by tripping the faulted line.
		c. Wait 20 cycles, and then re-close the line in (b) back into the fault.
		d. Leave fault on for 5 cycles, then trip the line in (b) and remove fault.
131	FLT168-3PH	**3 phase fault on the Roosevelt_N (524909) 230kV to Roosevelt_N (524908) 115kV/(524907) 13.2kV transformer, near Roosevelt_N 115kV.**
		a. Apply fault at the Roosevelt_N 115kV bus.
		b. Clear fault after 5 cycles by tripping the faulted transformer.
132	FLT169-3PH	**3 phase fault on the Roosevelt_S (524911) to SW_4k33 (524915) 230kV line circuit 1, near Roosevelt_S.**
		a. Apply fault at the Roosevelt_S 230kV bus.
		b. Clear fault after 5 cycles by tripping the faulted line.
		c. Wait 20 cycles, and then re-close the line in (b) back into the fault.
		d. Leave fault on for 5 cycles, then trip the line in (b) and remove fault.
133	FLT170-3PH	**3 phase fault on the G15-010-TAP (560034) to Roosevelt S (524911) 230kV line circuit 1, near G15-010-TAP.**
		a. Apply fault at the G15-010-TAP 230kV bus.
		b. Clear fault after 5 cycles by tripping the faulted line.
		c. Wait 20 cycles, and then re-close the line in (b) back into the fault.
		d. Leave fault on for 5 cycles, then trip the line in (b) and remove fault.
134	FLT171-3PH	**3 phase fault on the Tolk West (525531) to Tolk Tap (525543) 230kV line circuit 1, near Tolk West.**
		a. Apply fault at the Tolk West 230kV bus.
		b. Clear fault after 5 cycles by tripping the faulted line.
		c. Wait 20 cycles, and then re-close the line in (b) back into the fault.
		d. Leave fault on for 5 cycles, then trip the line in (b) and remove fault.
135	FLT172-3PH	**3 phase fault on the Tolk East (525524) to Plant X (525481) 230kV line circuit 2, near Tolk East.**
		a. Apply fault at the Tolk East 230kV bus.
		b. Clear fault after 5 cycles by tripping the faulted line.
		c. Wait 20 cycles, and then re-close the line in (b) back into the fault.
		d. Leave fault on for 5 cycles, then trip the line in (b) and remove fault.
136	FLT173-3PH	**3 phase fault on the Tolk East (525524) to Tolk Tap (525543) 230kV line circuit 1, near Tolk East.**
		a. Apply fault at the Tolk East 230kV bus.
		b. Clear fault after 5 cycles by tripping the faulted line.
		c. Wait 20 cycles, and then re-close the line in (b) back into the fault.
		d. Leave fault on for 5 cycles, then trip the line in (b) and remove fault.

Table 2-3 (Continued)
Case List with Contingency Description

Cont. No.	Cont. Name	Description
137	FLT174-3PH	**3 phase fault on the Swisher (525212) to Kress Int (525192) 115kV line circuit 1, near Swisher.**
		a. Apply fault at the Swisher 115kV bus.
		b. Clear fault after 5 cycles by tripping the faulted line.
		c. Wait 20 cycles, and then re-close the line in (b) back into the fault.
		d. Leave fault on for 5 cycles, then trip the line in (b) and remove fault.
138	FLT175-3PH	**3 phase fault on the Swisher (525212) 115kV to Swisher (525213) 230kV/(525211) 13.2kV transformer, near Swisher 115kV.**
		a. Apply fault at the Swisher 115kV bus.
		b. Clear fault after 5 cycles by tripping the faulted transformer.
139	FLT176-3PH	**3 phase fault on the Kress Int (525192) to Tulia Tap (525179) 115kV line circuit 1, near Kress Int.**
		a. Apply fault at the Kress Int 115kV bus.
		b. Clear fault after 5 cycles by tripping the faulted line.
		c. Wait 20 cycles, and then re-close the line in (b) back into the fault.
		d. Leave fault on for 5 cycles, then trip the line in (b) and remove fault.
140	FLT177-3PH	**3 phase fault on the Kress Int (525192) to Kress Rural (525225) 115kV line circuit 1, near Kress Int.**
		a. Apply fault at the Kress Int 115kV bus.
		b. Clear fault after 5 cycles by tripping the faulted line.
		c. Wait 20 cycles, and then re-close the line in (b) back into the fault.
		d. Leave fault on for 5 cycles, then trip the line in (b) and remove fault.
141	FLT178-3PH	**3 phase fault on the Kress Int (525192) to Hale Conty (525454) 115kV line circuit 1, near Kress Int.**
		a. Apply fault at the Kress Int 115kV bus.
		b. Clear fault after 5 cycles by tripping the faulted line.
		c. Wait 20 cycles, and then re-close the line in (b) back into the fault.
		d. Leave fault on for 5 cycles, then trip the line in (b) and remove fault.
142	FLT179-3PH	**3 phase fault on the Kress Int (525192) to Newhart (525460) 115kV line circuit 1, near Kress Int.**
		a. Apply fault at the Kress Int 115kV bus.
		b. Clear fault after 5 cycles by tripping the faulted line.
		c. Wait 20 cycles, and then re-close the line in (b) back into the fault.
		d. Leave fault on for 5 cycles, then trip the line in (b) and remove fault.
143	FLT180-3PH	**3 phase fault on the Randal (524364) to Manhattan (524224) 115kV line circuit 1, near Randal.**
		a. Apply fault at the Randal 115kV bus.
		b. Clear fault after 5 cycles by tripping the faulted line.
		c. Wait 20 cycles, and then re-close the line in (b) back into the fault.
		d. Leave fault on for 5 cycles, then trip the line in (b) and remove fault.
144	FLT181-3PH	**3 phase fault on the Randal (524364) to Georgia (524322) 115kV line circuit 1, near Randal.**
		a. Apply fault at the Randal 115kV bus.
		b. Clear fault after 5 cycles by tripping the faulted line.
		c. Wait 20 cycles, and then re-close the line in (b) back into the fault.
		d. Leave fault on for 5 cycles, then trip the line in (b) and remove fault.
145	FLT182-3PH	**3 phase fault on the Randal (524364) to Southeast (524338) 115kV line circuit 1, near Randal.**
		a. Apply fault at the Randal 115kV bus.
		b. Clear fault after 5 cycles by tripping the faulted line.
		c. Wait 20 cycles, and then re-close the line in (b) back into the fault.
		d. Leave fault on for 5 cycles, then trip the line in (b) and remove fault.
146	FLT183-3PH	**3 phase fault on the Randal (524364) to Canyon Tap (524522) 115kV line circuit 1, near Randal.**
		a. Apply fault at the Randal 115kV bus.
		b. Clear fault after 5 cycles by tripping the faulted line.
		c. Wait 20 cycles, and then re-close the line in (b) back into the fault.
		d. Leave fault on for 5 cycles, then trip the line in (b) and remove fault.

Table 2-3 (Continued)
Case List with Contingency Description

Cont. No.	Cont. Name	Description
147	FLT184-3PH	**3 phase fault on the Randal (524364) to Palo Duro (524530) 115kV line circuit 1, near Randal.**
		a. Apply fault at the Randal 115kV bus.
		b. Clear fault after 5 cycles by tripping the faulted line.
		c. Wait 20 cycles, and then re-close the line in (b) back into the fault.
		d. Leave fault on for 5 cycles, then trip the line in (b) and remove fault.
148	FLT185-3PH	**3 phase fault on the Randal (524364) 115kV to Randal (524365) 230kV/(524361) 13.2kV transformer, near Randal 115kV.**
		a. Apply fault at the Randal 115kV bus.
		b. Clear fault after 5 cycles by tripping the faulted transformer.
149	FLT186-3PH	**3 phase fault on the Hale County (525454) to Cox (525326) 115kV line circuit 1, near Hale County.**
		a. Apply fault at the Hale County 115kV bus.
		b. Clear fault after 5 cycles by tripping the faulted line.
		c. Wait 20 cycles, and then re-close the line in (b) back into the fault.
		d. Leave fault on for 5 cycles, then trip the line in (b) and remove fault.
150	FLT187-3PH	**3 phase fault on the Hale County (525454) to Lamton (525414) 115kV line circuit 1, near Hale County.**
		a. Apply fault at the Hale County 115kV bus.
		b. Clear fault after 5 cycles by tripping the faulted line.
		c. Wait 20 cycles, and then re-close the line in (b) back into the fault.
		d. Leave fault on for 5 cycles, then trip the line in (b) and remove fault.
151	FLT188-3PH	**3 phase fault on the Hale County (525454) to Plant X (525480) 115kV line circuit 1, near Hale County.**
		a. Apply fault at the Hale County 115kV bus.
		b. Clear fault after 5 cycles by tripping the faulted line.
		c. Wait 20 cycles, and then re-close the line in (b) back into the fault.
		d. Leave fault on for 5 cycles, then trip the line in (b) and remove fault.
152	FLT189-3PH	**3 phase fault on the Hale County (525454) 115kV to Hale County (525453) 69kV/(525451) 13.2kV transformer, near Hale County 115kV.**
		a. Apply fault at the Hale County 115kV bus.
		b. Clear fault after 5 cycles by tripping the faulted transformer.
153	FLT190-3PH	**3 phase fault on the Cox (525326) to Kiser (525272) 115kV line circuit 1, near Cox.**
		a. Apply fault at the Cox 115kV bus.
		b. Clear fault after 5 cycles by tripping the faulted line.
		c. Wait 20 cycles, and then re-close the line in (b) back into the fault.
		d. Leave fault on for 5 cycles, then trip the line in (b) and remove fault.
154	FLT191-3PH	**3 phase fault on the Cox (525326) to Floyd County (525780) 115kV line circuit 1, near Cox.**
		a. Apply fault at the Cox 115kV bus.
		b. Clear fault after 5 cycles by tripping the faulted line.
		c. Wait 20 cycles, and then re-close the line in (b) back into the fault.
		d. Leave fault on for 5 cycles, then trip the line in (b) and remove fault.
155	FLT192-3PH	**3 phase fault on the Newhart (525460) to Castro County (524746) 115kV line circuit 1, near Newhart.**
		a. Apply fault at the Newhart 115kV bus.
		b. Clear fault after 5 cycles by tripping the faulted line.
		c. Wait 20 cycles, and then re-close the line in (b) back into the fault.
		d. Leave fault on for 5 cycles, then trip the line in (b) and remove fault.
156	FLT193-3PH	**3 phase fault on the Newhart (525460) to Hart Industry (525124) 115kV line circuit 1, near Newhart.**
		a. Apply fault at the Newhart 115kV bus.
		b. Clear fault after 5 cycles by tripping the faulted line.
		c. Wait 20 cycles, and then re-close the line in (b) back into the fault.
		d. Leave fault on for 5 cycles, then trip the line in (b) and remove fault.
157	FLT194-3PH	**3 phase fault on the Newhart (525460) 115kV to Newhart (525461) 230kV/(525459) 13.2kV transformer, near Newhart 115kV.**
		a. Apply fault at the Newhart 115kV bus.
		b. Clear fault after 5 cycles by tripping the faulted transformer.

Table 2-3 (Continued)
Case List with Contingency Description

Cont. No.	Cont. Name	Description
158	FLT195-3PH	**3 phase fault on the Swisher (525213) to Amarillo (524415) 230kV line circuit 1, near Swisher.**
		a. Apply fault at the Swisher 230kV bus.
		b. Clear fault after 5 cycles by tripping the faulted line.
		c. Wait 20 cycles, and then re-close the line in (b) back into the fault.
		d. Leave fault on for 5 cycles, then trip the line in (b) and remove fault.
159	FLT196-3PH	**3 phase fault on the Swisher (525213) to Newhart (525461) 230kV line circuit 1, near Swisher.**
		a. Apply fault at the Swisher 230kV bus.
		b. Clear fault after 5 cycles by tripping the faulted line.
		c. Wait 20 cycles, and then re-close the line in (b) back into the fault.
		d. Leave fault on for 5 cycles, then trip the line in (b) and remove fault.
160	FLT197-3PH	**3 phase fault on the Swisher (525213) to Tuco2 (560021) 230kV line circuit 1, near Swisher.**
		a. Apply fault at the Swisher 230kV bus.
		b. Clear fault after 5 cycles by tripping the faulted line.
		c. Wait 20 cycles, and then re-close the line in (b) back into the fault.
		d. Leave fault on for 5 cycles, then trip the line in (b) and remove fault.
161	FLT198-3PH	**3 phase fault on the G15-014 Tap (560030) to Lehman (526352) 115kV line circuit 1, near G15-014 Tap.**
		a. Apply fault at the G15-014 Tap 115kV bus.
		b. Clear fault after 5 cycles by tripping the faulted line.
		c. Wait 20 cycles, and then re-close the line in (b) back into the fault.
		d. Leave fault on for 5 cycles, then trip the line in (b) and remove fault.
162	FLT199-3PH	**3 phase fault on the G15-014 Tap (560030) to Cochran (526361) 115kV line circuit 1, near G15-014 Tap.**
		a. Apply fault at the G15-014 Tap 115kV bus.
		b. Clear fault after 5 cycles by tripping the faulted line.
		c. Wait 20 cycles, and then re-close the line in (b) back into the fault.
		d. Leave fault on for 5 cycles, then trip the line in (b) and remove fault.
163	FLT200-3PH	**3 phase fault on the Lehman (526352) to LG-Plains (526944) 115kV line circuit 1, near Lehman.**
		a. Apply fault at the Lehman 115kV bus.
		b. Clear fault after 5 cycles by tripping the faulted line.
		c. Wait 20 cycles, and then re-close the line in (b) back into the fault.
		d. Leave fault on for 5 cycles, then trip the line in (b) and remove fault.
164	FLT201-3PH	**3 phase fault on the LE-PLNSINT (526928) to Yoakum (526934) 115kV line circuit 1, near LE-PLNSINT.**
		a. Apply fault at the LE-PLNSINT 115kV bus.
		b. Clear fault after 5 cycles by tripping the faulted line.
		c. Wait 20 cycles, and then re-close the line in (b) back into the fault.
		d. Leave fault on for 5 cycles, then trip the line in (b) and remove fault.
165	FLT202-3PH	**3 phase fault on the LE-PLNSINT (526928) to LG-Plains (526944) 115kV line circuit 1, near LE-PLNSINT.**
		a. Apply fault at the LE-PLNSINT 115kV bus.
		b. Clear fault after 5 cycles by tripping the faulted line.
		c. Wait 20 cycles, and then re-close the line in (b) back into the fault.
		d. Leave fault on for 5 cycles, then trip the line in (b) and remove fault.
166	FLT203-3PH	**3 phase fault on the LE-PLNSINT (526928) 115kV to LE-PLNSINT (528626) 69kV two winding transformer circuit 1, near LE-PLNSINT.**
		a. Apply fault at the LE-PLNSINT 115kV bus.
		b. Clear fault after 5 cycles by tripping the faulted transformer.
167	FLT204-3PH	**3 phase fault on the Cochran (526361) to Pacific (526424) 115kV line circuit 1, near Cochran.**
		a. Apply fault at the Cochran 115kV bus.
		b. Clear fault after 5 cycles by tripping the faulted line.
		c. Wait 20 cycles, and then re-close the line in (b) back into the fault.
		d. Leave fault on for 5 cycles, then trip the line in (b) and remove fault.

Table 2-3 (Continued)
Case List with Contingency Description

Cont. No.	Cont. Name	Description
168	FLT205-3PH	**3 phase fault on the Cochran (526361) 115kV to Cochran (526360) 69kV/(526358) 13.2kV transformer, near Cochran 115kV.**
		a. Apply fault at the Cochran 115kV bus.
		b. Clear fault after 5 cycles by tripping the faulted transformer.
169	FLT206-3PH	**3 phase fault on the Sundown (526434) to LC-OPDYKE (526036) 115kV line circuit 1, near Sundown.**
		a. Apply fault at the Sundown 115kV bus.
		b. Clear fault after 5 cycles by tripping the faulted line.
		c. Wait 20 cycles, and then re-close the line in (b) back into the fault.
		d. Leave fault on for 5 cycles, then trip the line in (b) and remove fault.
170	FLT207-3PH	**3 phase fault on the Sundown (526434) to Amoco Tap (526445) 115kV line circuit 1, near Sundown.**
		a. Apply fault at the Sundown 115kV bus.
		b. Clear fault after 5 cycles by tripping the faulted line.
		c. Wait 20 cycles, and then re-close the line in (b) back into the fault.
		d. Leave fault on for 5 cycles, then trip the line in (b) and remove fault.
171	FLT208-3PH	**3 phase fault on the Sundown (526434) 115kV to Sundown (526435) 230kV/(526432) 13.2kV transformer, near Sundown 115kV.**
		a. Apply fault at the Sundown 115kV bus.
		b. Clear fault after 5 cycles by tripping the faulted transformer.
172	FLT209-3PH	**3 phase fault on the Sundown (526435) to Plant X (525481) 230kV line circuit 1, near Sundown.**
		a. Apply fault at the Sundown 230kV bus.
		b. Clear fault after 5 cycles by tripping the faulted line.
		c. Wait 20 cycles, and then re-close the line in (b) back into the fault.
		d. Leave fault on for 5 cycles, then trip the line in (b) and remove fault.
173	FLT210-3PH	**3 phase fault on the Sundown (526435) to Amoco (526460) 230kV line circuit 1, near Sundown.**
		a. Apply fault at the Sundown 230kV bus.
		b. Clear fault after 5 cycles by tripping the faulted line.
		c. Wait 20 cycles, and then re-close the line in (b) back into the fault.
		d. Leave fault on for 5 cycles, then trip the line in (b) and remove fault.
174	FLT211-3PH	**3 phase fault on the Yoakum (526934) to Prentice (526792) 115kV line circuit 1, near Yoakum.**
		a. Apply fault at the Yoakum 115kV bus.
		b. Clear fault after 5 cycles by tripping the faulted line.
		c. Wait 20 cycles, and then re-close the line in (b) back into the fault.
		d. Leave fault on for 5 cycles, then trip the line in (b) and remove fault.
175	FLT212-3PH	**3 phase fault on the Yoakum (526934) to Arco Tap (527041) 115kV line circuit 1, near Yoakum.**
		a. Apply fault at the Yoakum 115kV bus.
		b. Clear fault after 5 cycles by tripping the faulted line.
		c. Wait 20 cycles, and then re-close the line in (b) back into the fault.
		d. Leave fault on for 5 cycles, then trip the line in (b) and remove fault.
176	FLT213-3PH	**3 phase fault on the Yoakum (526934) to Pleasant Hill (527194) 115kV line circuit 1, near Yoakum.**
		a. Apply fault at the Yoakum 115kV bus.
		b. Clear fault after 5 cycles by tripping the faulted line.
		c. Wait 20 cycles, and then re-close the line in (b) back into the fault.
		d. Leave fault on for 5 cycles, then trip the line in (b) and remove fault.
177	FLT214-3PH	**3 phase fault on the G14-074 Tap (560027) to OKU (511456) 345kV line circuit 1, near G14-074.**
		a. Apply fault at the G14-074 Tap 345kV bus.
		b. Clear fault after 5 cycles by tripping the faulted line.
		c. Wait 20 cycles, and then re-close the line in (b) back into the fault.
		d. Leave fault on for 5 cycles, then trip the line in (b) and remove fault.

Table 2-3 (Continued)
Case List with Contingency Description

178	FLT215-3PH	**3 phase fault on the G14-074 Tap (560027) to Tuco Int (525832) 345kV line circuit 1, near G14-074.**
		a. Apply fault at the G14-074 345kV bus.
		b. Clear fault after 5 cycles by tripping the faulted line.
		c. Wait 20 cycles, and then re-close the line in (b) back into the fault.
		d. Leave fault on for 5 cycles, then trip the line in (b) and remove fault.
179	FLT216-3PH	**3 phase fault on the OKU (511456) to LES (511468) 345kV line circuit 1, near OKU.**
		a. Apply fault at the OKU 345kV bus.
		b. Clear fault after 5 cycles by tripping the faulted line.
		c. Wait 20 cycles, and then re-close the line in (b) back into the fault.
		d. Leave fault on for 5 cycles, then trip the line in (b) and remove fault.
180	FLT217-3PH	**3 phase fault on the LES (511468) to Gracemont (515800) 345kV line circuit 1, near LES.**
		a. Apply fault at the LES 345kV bus.
		b. Clear fault after 5 cycles by tripping the faulted line.
		c. Wait 20 cycles, and then re-close the line in (b) back into the fault.
		d. Leave fault on for 5 cycles, then trip the line in (b) and remove fault.
181	FLT218-3PH	**3 phase fault on the LES (511468) to G14-057T (560013) 345kV line circuit 1, near LES.**
		a. Apply fault at the LES 345kV bus.
		b. Clear fault after 5 cycles by tripping the faulted line.
		c. Wait 20 cycles, and then re-close the line in (b) back into the fault.
		d. Leave fault on for 5 cycles, then trip the line in (b) and remove fault.
182	FLT219-3PH	**3 phase fault on the LES (511468) 345kV to LES (511467) 138kV/(511411) 13.8kV transformer CKT 2, near LES 345kV.**
		a. Apply fault at the LES 115kV bus.
		b. Clear fault after 5 cycles by tripping the faulted transformer.
183	FLT220-3PH	**3 phase fault on the G15-010-TAP (560034) to Tolk East (525524) 230kV line circuit 1, near G15-010-TAP.**
		a. Apply fault at the G15-010-TAP 230kV bus.
		b. Clear fault after 5 cycles by tripping the faulted line.
		c. Wait 20 cycles, and then re-close the line in (b) back into the fault.
		d. Leave fault on for 5 cycles, then trip the line in (b) and remove fault.
184	FLT221-3PH (2020SP, 2025SP, and all standalone cases)	**3 phase fault on the Woodward (515375) – Border (515458) 345kV circuit #1, near Woodward.**
		a. Apply fault at the Woodward 345kV bus.
		b. Clear fault after 5 cycles by tripping the faulted line.
		c. Wait 20 cycles, and then re-close the line in (b) back into the fault.
		d. Leave fault on for 5 cycles, then trip the line in (b) and remove fault.
185	FLT222-PO (2015SP&WP and 2020WP)	**(Prior Outage) Tuco2 (560022) – Border (515458) 345kV circuit #1 out of service then 3 phase fault on the Tuco2 (560022) to Border (515458) 345kV circuit #2, near Tuco2.**
		Switch Tuco2 (560022) – Border (515458) 345kV circuit #1 out of service then solve.
		a. Apply fault at the Tuco2 345kV bus.
		b. Clear fault after 5 cycles by tripping the faulted line.
186	FLT223-3PH (2015SP&WP and 2020WP)	**3 phase fault on the Chisholm (511553) – Woodward (515375) 345kV circuit #1, near Chisholm.**
		a. Apply fault at the Chisholm 345kV bus.
		b. Clear fault after 5 cycles by tripping the faulted line.
		c. Wait 20 cycles, and then re-close the line in (b) back into the fault.
		d. Leave fault on for 5 cycles, then trip the line in (b) and remove fault.
187	FLT224-3PH (2015SP&WP and 2020WP)	**3 phase fault on the Chisholm (511553) – Gracemont (515800) 345kV circuit #1, near Chisholm.**
		a. Apply fault at the Chisholm 345kV bus.
		b. Clear fault after 5 cycles by tripping the faulted line.
		c. Wait 20 cycles, and then re-close the line in (b) back into the fault.
		d. Leave fault on for 5 cycles, then trip the line in (b) and remove fault.
188	FLT225-3PH (2015SP&WP and 2020WP)	**3 phase fault on the Chisholm (511553) 345kV to Chisholm (511557) 230kV/(511558) 13.2kV transformer, near Chisholm 345kV.**
		a. Apply fault at the Chisholm 345kV bus.
		b. Clear fault after 5 cycles by tripping the faulted transformer.

Table 2-3 (Continued)
Case List with Contingency Description

Cont. No.	Cont. Name	Description
189	FLT226-PO (2015SP&WP and 2020WP)	**(Prior Outage) Tuco2 (560022) – Border (515458) 345kV circuit #1 out of service then 3 phase fault on the Chisholm (511553) to Border (515458) 345kV circuit #1, near Tuco2.**
		Switch Tuco2 (560022) – Border (515458) 345kV circuit #1 out of service then solve.
		a. Apply fault at the Chisholm 345kV bus.
		b. Clear fault after 5 cycles by tripping the faulted line.
190	FLT227-SB	**Single phase fault with stuck breaker on the Tuco2 (560022) to Border (515458) 345kV line, near Tuco2.**
		a. Apply fault at the Tuco2 345kV bus.
		b. Run 5 cycles, and then open Border end of the faulted line.
		c. Run 10 cycles, and then clear the fault and disconnect Tuco (525832) to Tuco2 (560022) line.
191	FLT228-SB	**Single phase fault with stuck breaker on the Tuco2 (560022) to Border (515458) 345kV line, near Tuco2.**
		a. Apply fault at the Tuco2 345kV bus.
		b. Run 5 cycles, and then open Boder end of the faulted line.
		c. Run 10 cycles, and then clear the fault and disconnect Tuco (560022) 345kV/ 230kV (560021)/13.2 (560023) transformer.

Table 2-4
Stand Alone Case List

Ref. No.	Cont. Name	GEN-2014-046	GEN-2014-065	GEN-2014-074	GEN-2015-009	GEN-2015-010	GEN-2015-014	GEN-2015-018	GEN-2015-020	GEN-2015-022	ASGI-2015-002	ASGI-2015-003
1	FLT01-3PH	X										
2	FLT02-3PH	X										
3	FLT03-3PH	X										
4	FLT04-3PH	X			X							
5	FLT05-3PH	X										
6	FLT06-3PH	X										
7	FLT07-3PH	X			X							
8	FLT08-3PH	X			X							
9	FLT09-3PH	X			X							
10	FLT10-3PH	X										
11	FLT11-3PH	X										
12	FLT12-3PH	X										
13	FLT13-3PH		X		X							
14	FLT14-3PH				X							
15	FLT15-3PH				X							
16	FLT16-3PH				X							
17	FLT22-3PH		X									
18	FLT23-3PH		X									
19	FLT24-3PH		X									
20	FLT25-3PH		X									
21	FLT28-3PH		X									
22	FLT29-3PH 2015WP & 2025SP Only		X									
23	FLT30-3PH 2015WP & 2025SP Only		X									
24	FLT31-3PH 2015WP & 2025SP Only		X									
25	FLT33-3PH		X									
26	FLT34-3PH		X									
27	FLT35-3PH		X									
28	FLT38-3PH		X									

Table 2-4 (Continued)
Stand Alone Case List

Ref. No.	Cont. Name	GEN-2014-046	GEN-2014-065	GEN-2014-074	GEN-2015-009	GEN-2015-010	GEN-2015-014	GEN-2015-018	GEN-2015-020	GEN-2015-022	ASGI-2015-002	ASGI-2015-003
29	FLT42-3PH		X									
30	FLT45-3PH		X									
31	FLT46-3PH		X									
32	FLT47-3PH		X									
33	FLT48-3PH											
34	FLT49-3PH											
35	FLT50-3PH					X		X	X			
36	FLT51-3PH											
37	FLT52-SB						X					
38	FLT53-3PH						X					
39	FLT54-SB						X					
40	FLT55-3PH						X					
41	FLT56-3PH						X					
42	FLT57-3PH						X					
43	FLT58-3PH						X					
44	FLT59-3PH						X					
45	FLT60-PO						X					
46	FLT61-SB						X					
47	FLT62-3PH					X		X	X			
48	FLT63-SB					X		X	X			
49	FLT64-3PH											
50	FLT65-SB											
51	FLT67-3PH											
52	FLT68-SB											
53	FLT69-PO					X						
54	FLT70-SB					X						
55	FLT71-3PH		X									
56	FLT72-3PH		X									
57	FLT73-3PH									X		
58	FLT74-3PH			X								
59	FLT75-3PH			X								
60	FLT76-3PH			X							X	
61	FLT77-3PH										X	

Table 2-4 (Continued)
Stand Alone Case List

Ref. No.	Cont. Name	GEN-2014-046	GEN-2014-065	GEN-2014-074	GEN-2015-009	GEN-2015-010	GEN-2015-014	GEN-2015-018	GEN-2015-020	GEN-2015-022	ASGI-2015-002	ASGI-2015-003
62	FLT78-3PH										X	
63	FLT79-3PH										X	
64	FLT80-3PH			X							X	
65	FLT81-3PH										X	
66	FLT82-3PH			X						X		
67	FLT88-3PH			X						X		
68	FLT90-3PH											
69	FLT91-3PH									X		
70	FLT93-3PH			X							X	
71	FLT94-3PH			X							X	
72	FLT95-3PH			X							X	
73	FLT96-3PH			X							X	
74	FLT97-3PH									X		
75	FLT98-PO			X						X	X	
76	FLT99-3PH											X
77	FLT100-3PH					X		X	X			X
78	FLT101-3PH					X		X	X			X
79	FLT102-3PH					X		X	X			X
80	FLT103-3PH					X		X	X			X
81	FLT104-3PH					X		X	X			X
82	FLT105-3PH					X		X	X			X
83	FLT106-3PH					X		X	X			X
84	FLT107-3PH					X		X	X			X
85	FLT108-3PH					X		X	X			X
86	FLT111-SB		X		X							
87	FLT116-3PH			X			X			X	X	
88	FLT117-3PH 2025SP Only			X						X	X	
89	FLT122-3PH											X
90	FLT123-3PH											
91	FLT125-3PH											
92	FLT126-3PH											
93	FLT129-3PH											

Table 2-4 (Continued)
Stand Alone Case List

Ref. No.	Cont. Name	GEN-2014-046	GEN-2014-065	GEN-2014-074	GEN-2015-009	GEN-2015-010	GEN-2015-014	GEN-2015-018	GEN-2015-020	GEN-2015-022	ASGI-2015-002	ASGI-2015-003
94	FLT130-3PH											
95	FLT132-3PH										X	
96	FLT133-3PH										X	
97	FLT134-3PH										X	
98	FLT135-3PH										X	
99	FLT136-3PH										X	
100	FLT137-3PH										X	
101	FLT138-3PH										X	
102	FLT139-3PH										X	
103	FLT140-3PH										X	
104	FLT141-3PH										X	
105	FLT142-3PH										X	
106	FLT143-3PH										X	
107	FLT144-3PH										X	
108	FLT145-3PH										X	
109	FLT146-3PH										X	
110	FLT147-3PH										X	
111	FLT148-3PH										X	
112	FLT149-3PH					X		X	X			
113	FLT150-3PH					X		X	X			
114	FLT151-3PH					X		X	X			
115	FLT152-3PH					X		X	X			
116	FLT153-3PH					X		X	X			
117	FLT154-3PH					X		X	X			X
118	FLT155-3PH					X		X	X			X
119	FLT156-3PH					X		X	X			X
120	FLT157-3PH					X		X	X			X
121	FLT158-3PH					X		X	X			X
122	FLT159-3PH					X		X	X			X
123	FLT160-3PH					X		X	X			X
124	FLT161-3PH					X		X	X			
125	FLT162-3PH					X		X	X			
126	FLT163-3PH					X		X	X			

Table 2-4 (Continued)
Stand Alone Case List

Ref. No.	Cont. Name	GEN-2014-046	GEN-2014-065	GEN-2014-074	GEN-2015-009	GEN-2015-010	GEN-2015-014	GEN-2015-018	GEN-2015-020	GEN-2015-022	ASGI-2015-002	ASGI-2015-003
127	FLT164-3PH					X		X	X			
128	FLT165-3PH					X		X	X			
129	FLT166-3PH					X		X	X			
130	FLT167-3PH					X		X	X			
131	FLT168-3PH					X		X	X			
132	FLT169-3PH					X		X	X			
133	FLT170-3PH					X		X	X			
134	FLT171-3PH					X		X	X			
135	FLT172-3PH					X		X	X			
136	FLT173-3PH					X		X	X			
137	FLT174-3PH									X		
138	FLT175-3PH									X		
139	FLT176-3PH									X		
140	FLT177-3PH									X		
141	FLT178-3PH									X		
142	FLT179-3PH									X		
143	FLT180-3PH									X		
144	FLT181-3PH									X		
145	FLT182-3PH									X		
146	FLT183-3PH									X		
147	FLT184-3PH									X		
148	FLT185-3PH									X		
149	FLT186-3PH									X		
150	FLT187-3PH									X		
151	FLT188-3PH									X		
152	FLT189-3PH									X		
153	FLT190-3PH									X		
154	FLT191-3PH									X		
155	FLT192-3PH									X		
156	FLT193-3PH									X		
157	FLT194-3PH									X		
158	FLT195-3PH									X		
159	FLT196-3PH									X		

Table 2-4 (Continued)
Stand Alone Case List

Ref. No.	Cont. Name	GEN-2014-046	GEN-2014-065	GEN-2014-074	GEN-2015-009	GEN-2015-010	GEN-2015-014	GEN-2015-018	GEN-2015-020	GEN-2015-022	ASGI-2015-002	ASGI-2015-003
160	FLT197-3PH									X		
161	FLT198-3PH						X					
162	FLT199-3PH						X					
163	FLT200-3PH						X					
164	FLT201-3PH						X					
165	FLT202-3PH						X					
166	FLT203-3PH						X					
167	FLT204-3PH						X					
168	FLT205-3PH						X					
169	FLT206-3PH						X					
170	FLT207-3PH						X					
171	FLT208-3PH						X					
172	FLT209-3PH						X					
173	FLT210-3PH						X					
174	FLT211-3PH						X					
175	FLT212-3PH						X					
176	FLT213-3PH						X					
177	FLT214-3PH			X								
178	FLT215-3PH			X								
179	FLT216-3PH			X								
180	FLT217-3PH			X								
181	FLT218-3PH			X								
182	FLT219-3PH			X								
183	FLT220-3PH											
184	FLT221-3PH			X								
185	FLT222-PO											
186	FLT223-3PH											
187	FLT224-3PH											
188	FLT225-3PH											
189	FLT226-PO											
190	FLT227-SB			X								
191	FLT228-SB			X								

SECTION 3: STABILITY ANALYSIS

The objective of the Stability Analysis was to determine the impacts of the generator interconnections on the stability and voltage recovery on the SPP transmission system. If problems with stability or voltage recovery were identified the need for reactive compensation or system upgrades was investigated.

3.1 Approach

SPP provided MEPPI with the following five power flow cases:

- MDWG14-15SP_DIS1501_G06
- MDWG14-15WP_DIS1501_G06
- MDWG14-20SP_DIS1501_G06
- MDWG14-20WP_DIS1501_G06
- MDWG14-25SP_DIS1501_G06

Each case was examined prior to the Stability Analysis to ensure the case contained the proposed study projects and any previously queued projects listed in Tables 2-1 and 2-2 respectively. There was no suspect power flow data in the study area. The dynamic datasets were also verified and stable initial system conditions (i.e., “flat lines”) were achieved. Three-phase and single phase-to-ground faults listed in Table 2-3 were examined. Single-phase fault impedances were calculated for each season to result in a voltage of approximately 60% of the pre-fault voltage. Refer to Table 3-1 for a list of the calculated single-phase fault impedances used for the Cluster Scenario. Refer to Tables 3-2 through 3-8 for single-phase fault impedances used for each Stand Alone Scenario.

Table 3-1
Calculated Single-Phase Fault Impedances for Cluster Scenario

Cont. No.*	Cont. Name	Single-Phase Fault Impedance (MVA)				
		2015 Summer	2015 Winter	2020 Summer	2020 Winter	2025 Summer
37	FLT52-SB	-7281.3	-6875.0	-7687.5	-7687.5	-8500.0
39	FLT54-SB	-3625.0	-2812.5	-4640.6	-4031.3	-4843.8
46	FLT61-SB	-3625.0	-2812.5	-4640.6	-4031.3	-4843.8
48	FLT63-SB	-7281.3	-6875.0	-7687.5	-7687.5	-8500.0
50	FLT65-SB	-7281.3	-6875.0	-7687.5	-7687.5	-8500.0
52	FLT68-SB	-7281.3	-6875.0	-7687.5	-7687.5	-8500.0
54	FLT70-SB	-7281.3	-6875.0	-7687.5	-7687.5	-8500.0
86	FLT111-SB	-1062.5	-1062.5	-1875.0	-1875.0	-1875.0
190	FLT227-SB	-4843.8	-4437.5	-5250.0	-5656.3	-5656.3
191	FLT228-SB	-4843.8	-4843.8	-4843.8	-4843.8	-4843.8

*Refer to Table 2-3 for a description of the contingency scenerio

Table 3-2
Calculated Single-Phase Fault Impedances for Stand Alone Scenario: GEN-2014-065

Cont. No.*	Cont. Name	Single-Phase Fault Impedance (MVA)		
		2015 Summer	2015 Winter	2025 Summer
86	FLT111-SB	-1062.5	-1000.0	-1875.0

*Refer to Table 2-3 for a description of the contingency scenario

Table 3-3
Calculated Single-Phase Fault Impedances for Stand Alone Scenario: GEN-2014-074

Cont. No.*	Cont. Name	Single-Phase Fault Impedance (MVA)		
		2015 Summer	2015 Winter	2025 Summer
190	FLT227-SB	-4843.8	-4437.5	-5656.3
191	FLT228-SB	-4843.8	-4843.8	-4843.8

*Refer to Table 2-3 for a description of the contingency scenario

Table 3-4
Calculated Single-Phase Fault Impedances for Stand Alone Scenario: GEN-2015-009

Cont. No.*	Cont. Name	Single-Phase Fault Impedance (MVA)		
		2015 Summer	2015 Winter	2025 Summer
86	FLT111-SB	-1062.5	-1000.0	-1875.0

*Refer to Table 2-3 for a description of the contingency scenario

Table 3-5
Calculated Single-Phase Fault Impedances for Stand Alone Scenario: GEN-2015-010

Cont. No.*	Cont. Name	Single-Phase Fault Impedance (MVA)		
		2015 Summer	2015 Winter	2025 Summer
48	FLT63-SB	-6875.0	-6062.5	-7687.5
54	FLT70-SB	-6875.0	-6062.5	-7687.5

*Refer to Table 2-3 for a description of the contingency scenario

Table 3-6
Calculated Single-Phase Fault Impedances for Stand Alone Scenario: GEN-2015-014

Cont. No.*	Cont. Name	Single-Phase Fault Impedance (MVA)		
		2015 Summer	2015 Winter	2025 Summer
37	FLT52-SB	-6875.0	-6062.5	-7687.5
39	FLT54-SB	-3625.0	-2812.5	-4640.6
46	FLT61-SB	-3625.0	-2812.5	-4640.6

*Refer to Table 2-3 for a description of the contingency scenario

Table 3-7
Calculated Single-Phase Fault Impedances for Stand Alone Scenario: GEN-2015-018

Cont. No.*	Cont. Name	Single-Phase Fault Impedance (MVA)		
		2015 Summer	2015 Winter	2025 Summer
48	FLT63-SB	-6875	-6062.5	-7687.5

*Refer to Table 2-3 for a description of the contingency scenario

Table 3-8
Calculated Single-Phase Fault Impedances for Stand Alone Scenario: GEN-2015-020

Cont. No.*	Cont. Name	Single-Phase Fault Impedance (MVA)		
		2015 Summer	2015 Winter	2025 Summer
48	FLT63-SB	-6875.0	-6062.5	-7687.5

*Refer to Table 2-3 for a description of the contingency scenario

Bus voltages, machine rotor angles, and previously queued generation in the study area were monitored in addition to bus voltages and machine rotor angles in the following areas:

- 520 AEPW
- 524 OKGE
- 525 WFEC
- 526 SPS
- 531 MIDW

- 534 SUNC
- 536 WERE

Requested and previously queued generation outside the above study area was also monitored.

The results of the analysis determined if reactive compensation or system upgrades were required to obtain acceptable system performance. If additional reactive compensation was required, the size, type, and location were determined. The proposed reactive reinforcements would ensure the wind or solar farm meets FERC Order 661A low voltage requirements and return the wind or solar farm to its pre-disturbance operating voltage. If the results indicated the need for fast responding reactive support, dynamic support such as an SVC or STATCOM was investigated. If tripping of the prior queued projects was observed during the stability analysis (for under/over voltage or under/over frequency) the simulations were re-ran with the prior queued project's voltage and frequency tripping disabled.

3.2 Cluster Scenario Stability Analysis Results

The Stability Analysis determined that there was one contingency that resulted in generation tripping offline for the 2015 Summer Peak, 2015 Winter Peak, 2020 Summer Peak, 2020 Winter Peak, and 2025 Summer Peak conditions when all generation interconnection requests were at 100% output. The limiting fault that generation was observed to trip offline was FLT215-3PH, loss of the G14-074 Tap to Tuco 345 kV line.

Refer to Table 3-9 for a summary of the Stability Analysis results for the contingencies listed in Table 2-3. Table 3-9 is a summary of the stability results for the 2015 Summer Peak, 2015 Winter Peak, 2020 Summer Peak, 2020 Winter Peak, and 2025 Summer Peak conditions and states whether the system remained stable or generation tripped offline and if acceptable voltage recovery was observed after the fault was cleared. Voltage recovery criteria includes ensuring that the transient voltage recovery is between 0.7 p.u. and 1.2 p.u. and ending in a steady-state voltage (for N-1 contingencies) at the pre-contingent level or at least 0.9 p.u. If high or low voltages were observed the number of buses failing the voltage criteria was listed.

Several voltage buses were observed to be outside of the 0.95 p.u. to 1.05 p.u. range. All instances were observed for pre-fault conditions and since all voltages returned to pre-fault conditions, no mitigation was required.

Refer to Appendix B, Appendix C, Appendix D, Appendix E, and Appendix F for a complete set of plots for all contingencies for 2015 Summer Peak, 2015 Winter Peak, 2020 Summer Peak, 2020 Winter Peak, and 2025 Summer Peak conditions, respectively.

Table 3-9
Cluster Scenario: Stability Analysis Summary of Results for 2015 Summer, 2015 Winter, 2020 Summer, 2020 Winter, and 2025 Summer Peak Conditions

Cont. No.	Cont. Name	2015 Summer Peak			2015 Winter Peak			2020 Summer Peak			2020 Winter Peak			2025 Summer Peak		
		Voltage Recovery		Stable?	Voltage Recovery		Stable?	Voltage Recovery		Stable?	Voltage Recovery		Stable?	Voltage Recovery		Stable?
		Less than .70 p.u.	Greater than 1.20 p.u.		Less than .70 p.u.	Greater than 1.20 p.u.		Less than .70 p.u.	Greater than 1.20 p.u.		Less than .70 p.u.	Greater than 1.20 p.u.		Less than .70 p.u.	Greater than 1.20 p.u.	
1	FLT01-3PH	No	No	Yes	No	No	Yes	No	No	Yes	No	No	Yes	No	No	Yes
2	FLT02-3PH	No	No	Yes	No	No	Yes	No	No	Yes	No	No	Yes	No	No	Yes
3	FLT03-3PH	No	No	Yes	No	No	Yes	No	No	Yes	No	No	Yes	No	No	Yes
4	FLT04-3PH	No	No	Yes	No	No	Yes	No	No	Yes	No	No	Yes	No	No	Yes
5	FLT05-3PH	No	No	Yes	No	No	Yes	No	No	Yes	No	No	Yes	No	No	Yes
6	FLT06-3PH	No	No	Yes	No	No	Yes	No	No	Yes	No	No	Yes	No	No	Yes
7	FLT07-3PH	No	No	Yes	No	No	Yes	No	No	Yes	No	No	Yes	No	No	Yes
8	FLT08-3PH	No	No	Yes	No	No	Yes	No	No	Yes	No	No	Yes	No	No	Yes
9	FLT09-3PH	No	No	Yes	No	No	Yes	No	No	Yes	No	No	Yes	No	No	Yes
10	FLT10-3PH	No	No	Yes	No	No	Yes	No	No	Yes	No	No	Yes	No	No	Yes
11	FLT11-3PH	No	No	Yes	No	No	Yes	No	No	Yes	No	No	Yes	No	No	Yes
12	FLT12-3PH	No	No	Yes	No	No	Yes	No	No	Yes	No	No	Yes	No	No	Yes
13	FLT13-3PH	No	No	Yes	No	No	Yes	No	No	Yes	No	No	Yes	No	No	Yes
14	FLT14-3PH	No	No	Yes	No	No	Yes	No	No	Yes	No	No	Yes	No	No	Yes
15	FLT15-3PH	No	No	Yes	No	No	Yes	No	No	Yes	No	No	Yes	No	No	Yes
16	FLT16-3PH	No	No	Yes	No	No	Yes	No	No	Yes	No	No	Yes	No	No	Yes
17	FLT22-3PH	No	No	Yes	No	No	Yes	No	No	Yes	No	No	Yes	No	No	Yes
18	FLT23-3PH	No	No	Yes	No	No	Yes	No	No	Yes	No	No	Yes	No	No	Yes
19	FLT24-3PH	No	No	Yes	No	No	Yes	No	No	Yes	No	No	Yes	No	No	Yes
20	FLT25-3PH	No	No	Yes	No	No	Yes	No	No	Yes	No	No	Yes	No	No	Yes
21	FLT28-3PH	No	No	Yes	No	No	Yes	No	No	Yes	No	No	Yes	No	No	Yes
22	FLT29-3PH	N/A			N/A			N/A			N/A			No	No	Yes
23	FLT30-3PH	N/A			N/A			N/A			N/A			No	No	Yes
24	FLT31-3PH	N/A			N/A			N/A			N/A			No	No	Yes
25	FLT33-3PH	No	No	Yes	No	No	Yes	No	No	Yes	No	No	Yes	No	No	Yes
26	FLT34-3PH	No	No	Yes	No	No	Yes	No	No	Yes	No	No	Yes	No	No	Yes
27	FLT35-3PH	No	No	Yes	No	No	Yes	No	No	Yes	No	No	Yes	No	No	Yes
28	FLT38-3PH	No	No	Yes	No	No	Yes	No	No	Yes	No	No	Yes	No	No	Yes
29	FLT42-3PH	No	No	Yes	No	No	Yes	No	No	Yes	No	No	Yes	No	No	Yes
30	FLT45-3PH	No	No	Yes	No	No	Yes	No	No	Yes	No	No	Yes	No	No	Yes
31	FLT46-3PH	No	No	Yes	No	No	Yes	No	No	Yes	No	No	Yes	No	No	Yes
32	FLT47-3PH	No	No	Yes	No	No	Yes	No	No	Yes	No	No	Yes	No	No	Yes
33	FLT48-3PH	No	No	Yes	No	No	Yes	No	No	Yes	No	No	Yes	No	No	Yes
34	FLT49-3PH	No	No	Yes	No	No	Yes	No	No	Yes	No	No	Yes	No	No	Yes
35	FLT50-3PH	No	No	Yes	No	No	Yes	No	No	Yes	No	No	Yes	No	No	Yes
36	FLT51-3PH	No	No	Yes	No	No	Yes	No	No	Yes	No	No	Yes	No	No	Yes
37	FLT52-SB	No	No	Yes	No	No	Yes	No	No	Yes	No	No	Yes	No	No	Yes
38	FLT53-3PH	No	No	Yes	No	No	Yes	No	No	Yes	No	No	Yes	No	No	Yes

Table 3-9 (Continued)
Cluster Scenario: Stability Analysis Summary of Results for 2015 Summer, 2015 Winter, 2020 Summer, 2020 Winter, and 2025 Summer Peak Conditions

Cont. No.	Cont. Name	2015 Summer Peak			2015 Winter Peak			2020 Summer Peak			2020 Winter Peak			2025 Summer Peak		
		Voltage Recovery		Stable?	Voltage Recovery		Stable?	Voltage Recovery		Stable?	Voltage Recovery		Stable?	Voltage Recovery		Stable?
		Less than .70 p.u.	Greater than 1.20 p.u.		Less than .70 p.u.	Greater than 1.20 p.u.		Less than .70 p.u.	Greater than 1.20 p.u.		Less than .70 p.u.	Greater than 1.20 p.u.		Less than .70 p.u.	Greater than 1.20 p.u.	
39	FLT54-SB	No	No	Yes	No	No	Yes	No	No	Yes	No	No	Yes	No	No	Yes
40	FLT55-3PH	No	No	Yes	No	No	Yes	No	No	Yes	No	No	Yes	No	No	Yes
41	FLT56-3PH	No	No	Yes	No	No	Yes	No	No	Yes	No	No	Yes	No	No	Yes
42	FLT57-3PH	No	No	Yes	No	No	Yes	No	No	Yes	No	No	Yes	No	No	Yes
43	FLT58-3PH	No	No	Yes	No	No	Yes	No	No	Yes	No	No	Yes	No	No	Yes
44	FLT59-3PH	No	No	Yes	No	No	Yes	No	No	Yes	No	No	Yes	No	No	Yes
45	FLT60-PO	No	No	Yes	No	No	Yes	No	No	Yes	No	No	Yes	No	No	Yes
46	FLT61-SB	No	No	Yes	No	No	Yes	No	No	Yes	No	No	Yes	No	No	Yes
47	FLT62-3PH	No	No	Yes	No	No	Yes	No	No	Yes	No	No	Yes	No	No	Yes
48	FLT63-SB	No	No	Yes	No	No	Yes	No	No	Yes	No	No	Yes	No	No	Yes
49	FLT64-3PH	No	No	Yes	No	No	Yes	No	No	Yes	No	No	Yes	No	No	Yes
50	FLT65-SB	No	No	Yes	No	No	Yes	No	No	Yes	No	No	Yes	No	No	Yes
51	FLT67-3PH	No	No	Yes	No	No	Yes	No	No	Yes	No	No	Yes	No	No	Yes
52	FLT68-SB	No	No	Yes	No	No	Yes	No	No	Yes	No	No	Yes	No	No	Yes
53	FLT69-PO	No	No	Yes	No	No	Yes	No	No	Yes	No	No	Yes	No	No	Yes
54	FLT70-SB	No	No	Yes	No	No	Yes	No	No	Yes	No	No	Yes	No	No	Yes
55	FLT71-3PH	No	No	Yes	No	No	Yes	No	No	Yes	No	No	Yes	No	No	Yes
56	FLT72-3PH	No	No	Yes	No	No	Yes	No	No	Yes	No	No	Yes	No	No	Yes
57	FLT73-3PH	No	No	Yes	No	No	Yes	No	No	Yes	No	No	Yes	No	No	Yes
58	FLT74-3PH	No	No	Yes	No	No	Yes	No	No	Yes	No	No	Yes	No	No	Yes
59	FLT75-3PH	No	No	Yes	No	No	Yes	No	No	Yes	No	No	Yes	No	No	Yes
60	FLT76-3PH	No	No	Yes	No	No	Yes	No	No	Yes	No	No	Yes	No	No	Yes
61	FLT77-3PH	No	No	Yes	No	No	Yes	No	No	Yes	No	No	Yes	No	No	Yes
62	FLT78-3PH	No	No	Yes	No	No	Yes	No	No	Yes	No	No	Yes	No	No	Yes
63	FLT79-3PH	No	No	Yes	No	No	Yes	No	No	Yes	No	No	Yes	No	No	Yes
64	FLT80-3PH	No	No	Yes	No	No	Yes	No	No	Yes	No	No	Yes	No	No	Yes
65	FLT81-3PH	No	No	Yes	No	No	Yes	No	No	Yes	No	No	Yes	No	No	Yes
66	FLT82-3PH	No	No	Yes	No	No	Yes	No	No	Yes	No	No	Yes	No	No	Yes
67	FLT88-3PH	No	No	Yes	No	No	Yes	No	No	Yes	No	No	Yes	No	No	Yes
68	FLT90-3PH	No	No	Yes	No	No	Yes	No	No	Yes	No	No	Yes	No	No	Yes
69	FLT91-3PH	No	No	Yes	No	No	Yes	No	No	Yes	No	No	Yes	No	No	Yes
70	FLT93-3PH	No	No	Yes	No	No	Yes	No	No	Yes	No	No	Yes	No	No	Yes
71	FLT94-3PH	No	No	Yes	No	No	Yes	No	No	Yes	No	No	Yes	No	No	Yes
72	FLT95-3PH	No	No	Yes	No	No	Yes	No	No	Yes	No	No	Yes	No	No	Yes
73	FLT96-3PH	No	No	Yes	No	No	Yes	No	No	Yes	No	No	Yes	No	No	Yes
74	FLT97-3PH	No	No	Yes	No	No	Yes	No	No	Yes	No	No	Yes	No	No	Yes
75	FLT98-PO	No	No	Yes	No	No	Yes	No	No	Yes	No	No	Yes	No	No	Yes
76	FLT99-3PH	No	No	Yes	No	No	Yes	No	No	Yes	No	No	Yes	No	No	Yes

Table 3-9 (Continued)
Cluster Scenario: Stability Analysis Summary of Results for 2015 Summer, 2015 Winter, 2020 Summer, 2020 Winter, and 2025 Summer Peak Conditions

Cont. No.	Cont. Name	2015 Summer Peak			2015 Winter Peak			2020 Summer Peak			2020 Winter Peak			2025 Summer Peak		
		Voltage Recovery		Stable?	Voltage Recovery		Stable?	Voltage Recovery		Stable?	Voltage Recovery		Stable?	Voltage Recovery		Stable?
		Less than .70 p.u.	Greater than 1.20 p.u.		Less than .70 p.u.	Greater than 1.20 p.u.		Less than .70 p.u.	Greater than 1.20 p.u.		Less than .70 p.u.	Greater than 1.20 p.u.		Less than .70 p.u.	Greater than 1.20 p.u.	
77	FLT100-3PH	No	No	Yes	No	No	Yes	No	No	Yes	No	No	Yes	No	No	Yes
78	FLT101-3PH	No	No	Yes	No	No	Yes	No	No	Yes	No	No	Yes	No	No	Yes
79	FLT102-3PH	No	No	Yes	No	No	Yes	No	No	Yes	No	No	Yes	No	No	Yes
80	FLT103-3PH	No	No	Yes	No	No	Yes	No	No	Yes	No	No	Yes	No	No	Yes
81	FLT104-3PH	No	No	Yes	No	No	Yes	No	No	Yes	No	No	Yes	No	No	Yes
82	FLT105-3PH	No	No	Yes	No	No	Yes	No	No	Yes	No	No	Yes	No	No	Yes
83	FLT106-3PH	No	No	Yes	No	No	Yes	No	No	Yes	No	No	Yes	No	No	Yes
84	FLT107-3PH	No	No	Yes	No	No	Yes	No	No	Yes	No	No	Yes	No	No	Yes
85	FLT108-3PH	No	No	Yes	No	No	Yes	No	No	Yes	No	No	Yes	No	No	Yes
86	FLT111-SB	No	No	Yes	No	No	Yes	No	No	Yes	No	No	Yes	No	No	Yes
87	FLT116-3PH	No	No	Yes	No	No	Yes	No	No	Yes	No	No	Yes	No	No	Yes
88	FLT117-3PH	N/A			N/A			No	No	Yes	No	No	Yes	No	No	Yes
89	FLT122-3PH	No	No	Yes	No	No	Yes	No	No	Yes	No	No	Yes	No	No	Yes
90	FLT123-3PH	No	No	Yes	No	No	Yes	No	No	Yes	No	No	Yes	No	No	Yes
91	FLT125-3PH	No	No	Yes	No	No	Yes	No	No	Yes	No	No	Yes	No	No	Yes
92	FLT126-3PH	No	No	Yes	No	No	Yes	No	No	Yes	No	No	Yes	No	No	Yes
93	FLT129-3PH	N/A			N/A			No	No	Yes	No	No	Yes	No	No	Yes
94	FLT130-3PH	No	No	Yes	No	No	Yes	N/A			N/A			N/A		
95	FLT132-3PH	No	No	Yes	No	No	Yes	No	No	Yes	No	No	Yes	No	No	Yes
96	FLT133-3PH	No	No	Yes	No	No	Yes	No	No	Yes	No	No	Yes	No	No	Yes
97	FLT134-3PH	No	No	Yes	No	No	Yes	No	No	Yes	No	No	Yes	No	No	Yes
98	FLT135-3PH	No	No	Yes	No	No	Yes	No	No	Yes	No	No	Yes	No	No	Yes
99	FLT136-3PH	No	No	Yes	No	No	Yes	No	No	Yes	No	No	Yes	No	No	Yes
100	FLT137-3PH	No	No	Yes	No	No	Yes	No	No	Yes	No	No	Yes	No	No	Yes
101	FLT138-3PH	No	No	Yes	No	No	Yes	No	No	Yes	No	No	Yes	No	No	Yes
102	FLT139-3PH	No	No	Yes	No	No	Yes	No	No	Yes	No	No	Yes	No	No	Yes
103	FLT140-3PH	No	No	Yes	No	No	Yes	No	No	Yes	No	No	Yes	No	No	Yes
104	FLT141-3PH	No	No	Yes	No	No	Yes	No	No	Yes	No	No	Yes	No	No	Yes
105	FLT142-3PH	No	No	Yes	No	No	Yes	No	No	Yes	No	No	Yes	No	No	Yes
106	FLT143-3PH	No	No	Yes	No	No	Yes	No	No	Yes	No	No	Yes	No	No	Yes
107	FLT144-3PH	No	No	Yes	No	No	Yes	No	No	Yes	No	No	Yes	No	No	Yes
108	FLT145-3PH	No	No	Yes	No	No	Yes	No	No	Yes	No	No	Yes	No	No	Yes
109	FLT146-3PH	No	No	Yes	No	No	Yes	No	No	Yes	No	No	Yes	No	No	Yes
110	FLT147-3PH	No	No	Yes	No	No	Yes	No	No	Yes	No	No	Yes	No	No	Yes
111	FLT148-3PH	No	No	Yes	No	No	Yes	No	No	Yes	No	No	Yes	No	No	Yes
112	FLT148-3PH	No	No	Yes	No	No	Yes	No	No	Yes	No	No	Yes	No	No	Yes
113	FLT150-3PH	No	No	Yes	No	No	Yes	No	No	Yes	No	No	Yes	No	No	Yes
114	FLT151-3PH	No	No	Yes	No	No	Yes	No	No	Yes	No	No	Yes	No	No	Yes

Table 3-9 (Continued)
Cluster Scenario: Stability Analysis Summary of Results for 2015 Summer, 2015 Winter, 2020 Summer, 2020 Winter, and 2025 Summer Peak Conditions

Cont. No.	Cont. Name	2015 Summer Peak			2015 Winter Peak			2020 Summer Peak			2020 Winter Peak			2025 Summer Peak		
		Voltage Recovery		Stable?	Voltage Recovery		Stable?	Voltage Recovery		Stable?	Voltage Recovery		Stable?	Voltage Recovery		Stable?
		Less than .70 p.u.	Greater than 1.20 p.u.		Less than .70 p.u.	Greater than 1.20 p.u.		Less than .70 p.u.	Greater than 1.20 p.u.		Less than .70 p.u.	Greater than 1.20 p.u.		Less than .70 p.u.	Greater than 1.20 p.u.	
115	FLT152-3PH	No	No	Yes	No	No	Yes	No	No	Yes	No	No	Yes	No	No	Yes
116	FLT153-3PH	No	No	Yes	No	No	Yes	No	No	Yes	No	No	Yes	No	No	Yes
117	FLT154-3PH	No	No	Yes	No	No	Yes	No	No	Yes	No	No	Yes	No	No	Yes
118	FLT155-3PH	No	No	Yes	No	No	Yes	No	No	Yes	No	No	Yes	No	No	Yes
119	FLT156-3PH	No	No	Yes	No	No	Yes	No	No	Yes	No	No	Yes	No	No	Yes
120	FLT157-3PH	No	No	Yes	No	No	Yes	No	No	Yes	No	No	Yes	No	No	Yes
121	FLT158-3PH	No	No	Yes	No	No	Yes	No	No	Yes	No	No	Yes	No	No	Yes
122	FLT159-3PH	No	No	Yes	No	No	Yes	No	No	Yes	No	No	Yes	No	No	Yes
123	FLT160-3PH	No	No	Yes	No	No	Yes	No	No	Yes	No	No	Yes	No	No	Yes
124	FLT161-3PH	No	No	Yes	No	No	Yes	No	No	Yes	No	No	Yes	No	No	Yes
125	FLT162-3PH	No	No	Yes	No	No	Yes	No	No	Yes	No	No	Yes	No	No	Yes
126	FLT163-3PH	No	No	Yes	No	No	Yes	No	No	Yes	No	No	Yes	No	No	Yes
127	FLT164-3PH	No	No	Yes	No	No	Yes	No	No	Yes	No	No	Yes	No	No	Yes
128	FLT165-3PH	No	No	Yes	No	No	Yes	No	No	Yes	No	No	Yes	No	No	Yes
129	FLT166-3PH	No	No	Yes	No	No	Yes	No	No	Yes	No	No	Yes	No	No	Yes
130	FLT167-3PH	No	No	Yes	No	No	Yes	No	No	Yes	No	No	Yes	No	No	Yes
131	FLT168-3PH	No	No	Yes	No	No	Yes	No	No	Yes	No	No	Yes	No	No	Yes
132	FLT169-3PH	No	No	Yes	No	No	Yes	No	No	Yes	No	No	Yes	No	No	Yes
133	FLT170-3PH	No	No	Yes	No	No	Yes	No	No	Yes	No	No	Yes	No	No	Yes
134	FLT171-3PH	No	No	Yes	No	No	Yes	No	No	Yes	No	No	Yes	No	No	Yes
135	FLT172-3PH	No	No	Yes	No	No	Yes	No	No	Yes	No	No	Yes	No	No	Yes
136	FLT173-3PH	No	No	Yes	No	No	Yes	No	No	Yes	No	No	Yes	No	No	Yes
137	FLT174-3PH	No	No	Yes	No	No	Yes	No	No	Yes	No	No	Yes	No	No	Yes
138	FLT175-3PH	No	No	Yes	No	No	Yes	No	No	Yes	No	No	Yes	No	No	Yes
139	FLT176-3PH	No	No	Yes	No	No	Yes	No	No	Yes	No	No	Yes	No	No	Yes
140	FLT177-3PH	No	No	Yes	No	No	Yes	No	No	Yes	No	No	Yes	No	No	Yes
141	FLT178-3PH	No	No	Yes	No	No	Yes	No	No	Yes	No	No	Yes	No	No	Yes
142	FLT179-3PH	No	No	Yes	No	No	Yes	No	No	Yes	No	No	Yes	No	No	Yes
143	FLT180-3PH	No	No	Yes	No	No	Yes	No	No	Yes	No	No	Yes	No	No	Yes
144	FLT181-3PH	No	No	Yes	No	No	Yes	No	No	Yes	No	No	Yes	No	No	Yes
145	FLT182-3PH	No	No	Yes	No	No	Yes	No	No	Yes	No	No	Yes	No	No	Yes
146	FLT183-3PH	No	No	Yes	No	No	Yes	No	No	Yes	No	No	Yes	No	No	Yes
147	FLT184-3PH	No	No	Yes	No	No	Yes	No	No	Yes	No	No	Yes	No	No	Yes
148	FLT185-3PH	No	No	Yes	No	No	Yes	No	No	Yes	No	No	Yes	No	No	Yes
149	FLT186-3PH	No	No	Yes	No	No	Yes	No	No	Yes	No	No	Yes	No	No	Yes
150	FLT187-3PH	No	No	Yes	No	No	Yes	No	No	Yes	No	No	Yes	No	No	Yes
151	FLT188-3PH	No	No	Yes	No	No	Yes	No	No	Yes	No	No	Yes	No	No	Yes
152	FLT189-3PH	No	No	Yes	No	No	Yes	No	No	Yes	No	No	Yes	No	No	Yes

Table 3-9 (Continued)
Cluster Scenario: Stability Analysis Summary of Results for 2015 Summer, 2015 Winter, 2020 Summer, 2020 Winter, and 2025 Summer Peak Conditions

Cont. No.	Cont. Name	2015 Summer Peak			2015 Winter Peak			2020 Summer Peak			2020 Winter Peak			2025 Summer Peak		
		Voltage Recovery		Stable?	Voltage Recovery		Stable?	Voltage Recovery		Stable?	Voltage Recovery		Stable?	Voltage Recovery		Stable?
		Less than .70 p.u.	Greater than 1.20 p.u.		Less than .70 p.u.	Greater than 1.20 p.u.		Less than .70 p.u.	Greater than 1.20 p.u.		Less than .70 p.u.	Greater than 1.20 p.u.		Less than .70 p.u.	Greater than 1.20 p.u.	
153	FLT190-3PH	No	No	Yes	No	No	Yes	No	No	Yes	No	No	Yes	No	No	Yes
154	FLT191-3PH	No	No	Yes	No	No	Yes	No	No	Yes	No	No	Yes	No	No	Yes
155	FLT192-3PH	No	No	Yes	No	No	Yes	No	No	Yes	No	No	Yes	No	No	Yes
156	FLT193-3PH	No	No	Yes	No	No	Yes	No	No	Yes	No	No	Yes	No	No	Yes
157	FLT194-3PH	No	No	Yes	No	No	Yes	No	No	Yes	No	No	Yes	No	No	Yes
158	FLT195-3PH	No	No	Yes	No	No	Yes	No	No	Yes	No	No	Yes	No	No	Yes
159	FLT196-3PH	No	No	Yes	No	No	Yes	No	No	Yes	No	No	Yes	No	No	Yes
160	FLT197-3PH	No	No	Yes	No	No	Yes	No	No	Yes	No	No	Yes	No	No	Yes
161	FLT198-3PH	No	No	Yes	No	No	Yes	No	No	Yes	No	No	Yes	No	No	Yes
162	FLT199-3PH	No	No	Yes	No	No	Yes	No	No	Yes	No	No	Yes	No	No	Yes
163	FLT200-3PH	No	No	Yes	No	No	Yes	No	No	Yes	No	No	Yes	No	No	Yes
164	FLT201-3PH	No	No	Yes	No	No	Yes	No	No	Yes	No	No	Yes	No	No	Yes
165	FLT202-3PH	No	No	Yes	No	No	Yes	No	No	Yes	No	No	Yes	No	No	Yes
166	FLT203-3PH	No	No	Yes	No	No	Yes	No	No	Yes	No	No	Yes	No	No	Yes
167	FLT204-3PH	No	No	Yes	No	No	Yes	No	No	Yes	No	No	Yes	No	No	Yes
168	FLT205-3PH	No	No	Yes	No	No	Yes	No	No	Yes	No	No	Yes	No	No	Yes
169	FLT206-3PH	No	No	Yes	No	No	Yes	No	No	Yes	No	No	Yes	No	No	Yes
170	FLT207-3PH	No	No	Yes	No	No	Yes	No	No	Yes	No	No	Yes	No	No	Yes
171	FLT208-3PH	No	No	Yes	No	No	Yes	No	No	Yes	No	No	Yes	No	No	Yes
172	FLT209-3PH	No	No	Yes	No	No	Yes	No	No	Yes	No	No	Yes	No	No	Yes
173	FLT210-3PH	No	No	Yes	No	No	Yes	No	No	Yes	No	No	Yes	No	No	Yes
174	FLT211-3PH	No	No	Yes	No	No	Yes	No	No	Yes	No	No	Yes	No	No	Yes
175	FLT212-3PH	No	No	Yes	No	No	Yes	No	No	Yes	No	No	Yes	No	No	Yes
176	FLT213-3PH	No	No	Yes	No	No	Yes	No	No	Yes	No	No	Yes	No	No	Yes
177	FLT214-3PH	No	No	Yes	No	No	Yes	No	No	Yes	No	Yes	Yes	No	No	Yes
178	FLT215-3PH	Generation Trips			Generation Trips			Generation Trips			Generation Trips			Generation Trips		
179	FLT216-3PH	No	No	Yes	No	No	Yes	No	No	Yes	No	Yes	Yes	No	No	Yes
180	FLT217-3PH	No	No	Yes	No	No	Yes	No	No	Yes	No	No	Yes	No	No	Yes
181	FLT218-3PH	No	No	Yes	No	No	Yes	No	No	Yes	No	No	Yes	No	No	Yes
182	FLT219-3PH	No	No	Yes	No	No	Yes	No	No	Yes	No	No	Yes	No	No	Yes
183	FLT220-3PH	No	No	Yes	No	No	Yes	No	No	Yes	No	No	Yes	No	No	Yes
184	FLT221-3PH	N/A			N/A			No	No	Yes	No	No	Yes	No	No	Yes
185	FLT222-PO	No	No	Yes	No	No	Yes	N/A			N/A			N/A		
186	FLT223-3PH	No	No	Yes	No	No	Yes	N/A			N/A			N/A		
187	FLT224-3PH	No	No	Yes	No	No	Yes	N/A			N/A			N/A		
188	FLT225-3PH	No	No	Yes	No	No	Yes	N/A			N/A			N/A		
189	FLT226-PO	No	No	Yes	No	No	Yes	N/A			N/A			N/A		
190	FLT227-SB	No	No	Yes	No	No	Yes	No	No	Yes	No	No	Yes	No	No	Yes
191	FLT228-SB	No	No	Yes	No	No	Yes	No	No	Yes	No	No	Yes	No	No	Yes

An SVC upgrade was required to mitigate GEN-2014-074 tripping offline for a fault (FLT215-3PH) resulting in the loss of the G14-074 Tap to Tuco 345 kV line. After the fault is cleared, the terminal voltage of GEN-2014-074 is 1.16 p.u. The voltage protection settings of GEN-2014-074 will trip the generator when the terminal voltage is great than 1.15 p.u. for more than 2 seconds. To mitigate the generator from tripping offline, the following upgrade was implemented as discussed with SPP:

- Add an SVC at the G14-074 Tap 345 kV bus
  - 2015SP: -25 Mvar
  - 2015WP: -30 Mvar
  - 2020SP: -30 Mvar
  - 2020WP: -30 Mvar
  - 2025SP: -25 Mvar

Note only the need for reactive capability of the G14-074 Tap SVC was observed. After the fault was cleared, all voltages in the area recovered within SPP's performance criteria.

Refer to Figure 3-1 for a comparison plot of GEN-2014-074's real power for FLT215-3PH for the 2015 Summer Peak case with and without system upgrades. Refer to Figure 3-2 for a comparison plot of GEN-2014-074 terminal voltage for FLT215-3PH for the 2015 Summer Peak case with and without system upgrades. Refer to Figure 3-3 for a plot of area voltages indicating capacitive capability of the G14-074 Tap SVC is not required.

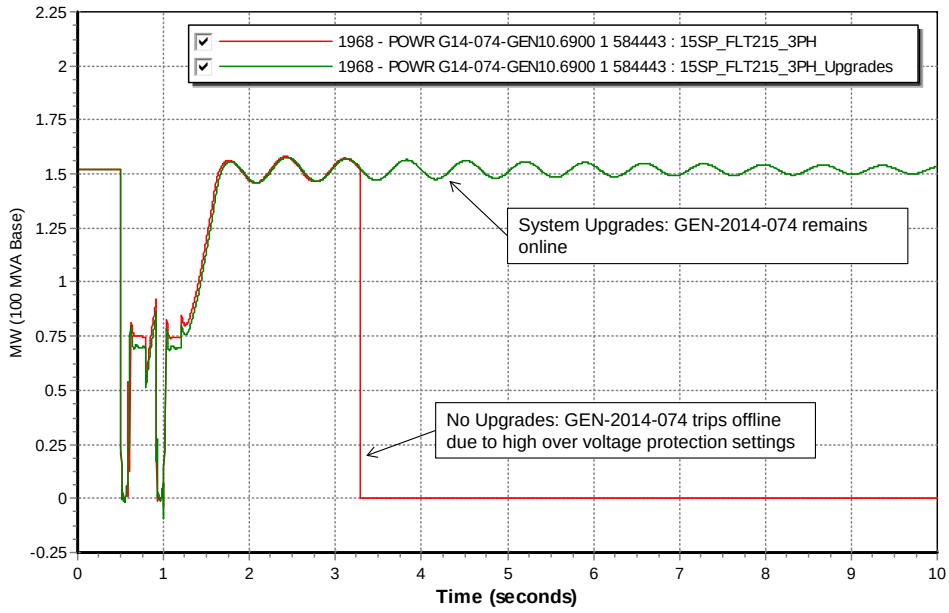

Figure 3-1. GEN-2014-074 comparison plot of real power for FLT215-3PH for the 2015 Summer Peak case with and without upgrades.

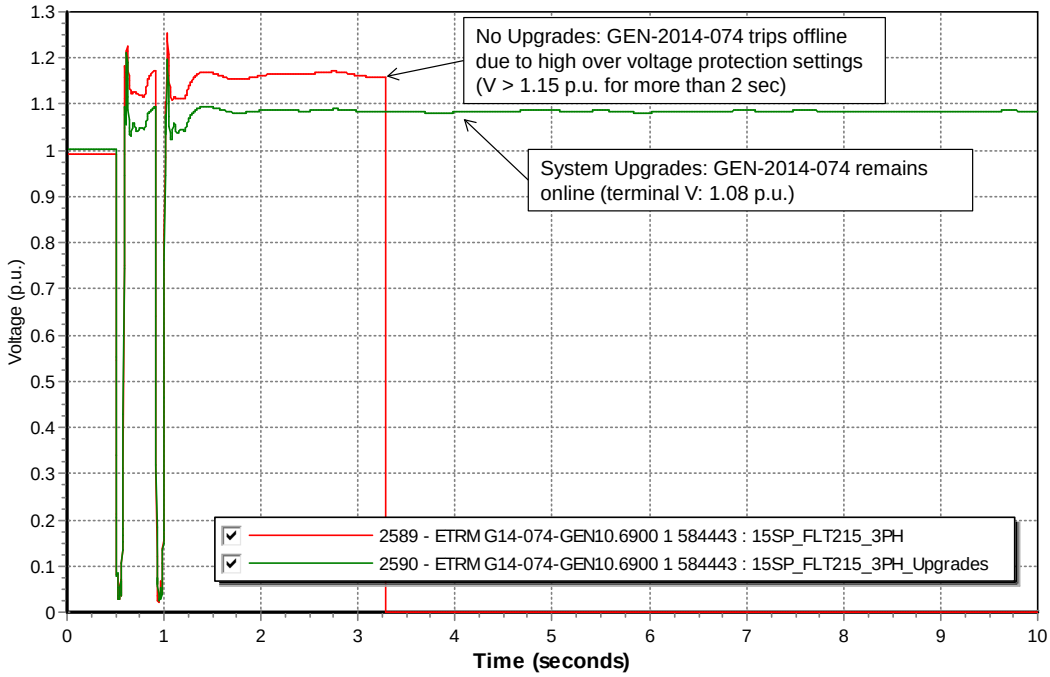

Figure 3-2. GEN-2014-074 terminal voltage comparison plot for FLT215-3PH for the 2015 Summer Peak case with and without upgrades.

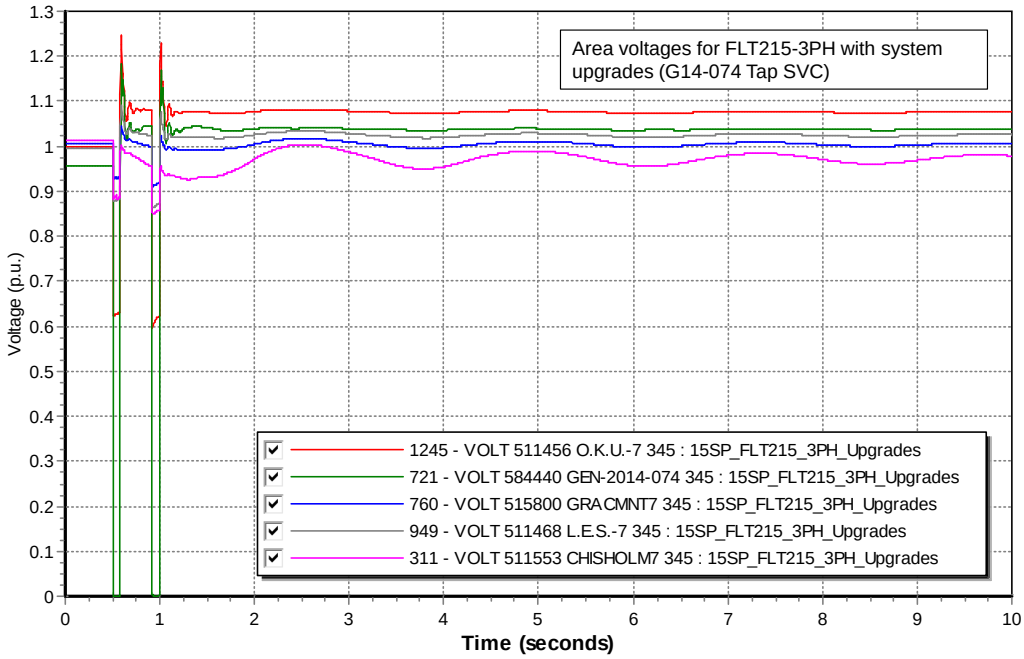

Figure 3-3. Plot of area voltages for FLT215-3PH for the 2015 Summer Peak case with system upgrades.

After the SVC upgrade was implemented, the Stability Analysis was re-simulated to determine system stability. With the required upgrade, the Stability Analysis determined that there was no wind turbine tripping or system instability as a result of interconnected all study projects at 100% output.

3.3 Stand Alone Scenario Stability Analysis Results: GEN-2014-046

The Stability Analysis determined that there were no contingencies that resulted in system instability, generation tripping offline, or voltage violations for 2015 Summer Peak, 2015 Winter Peak, and 2025 Summer Peak conditions when GEN-2014-046 was at 100% output.

Refer to Table 3-10 for a summary of the Stability Analysis results for the contingencies listed in Table 2-3 that correspond to the GEN-2014-046 Stand Alone Analysis. Table 3-10 is a summary of the stability results for the 2015 Summer Peak, 2015 Winter Peak, and 2025 Summer Peak conditions and states whether the system remained stable or generation tripped offline and if acceptable voltage recovery was observed after the fault was cleared. Voltage recovery criteria includes ensuring that the transient voltage recovery is between 0.7 p.u. and 1.2 p.u. and ending in a steady state voltage (for N-1 contingencies) at the pre-contingent level or at least 0.9 p.u. If high or low voltages were observed the number of buses failing the voltage criteria was listed.

Several voltage buses consistently fell outside of the 0.95 p.u. to 1.05 p.u. range. All instances were observed for pre-fault conditions and since all voltages returned to pre-fault conditions, no mitigation was required.

Refer to Appendix G for a complete set of plots for all the GEN-2014-046 Stand Alone Analysis contingencies for 2015 Summer Peak, 2015 Winter Peak, and 2025 Summer Peak conditions.

Table 3-10
Stand Alone Scenario GEN-2014-046: Stability Analysis Summary of Results for 2015 Winter, 2015 Summer, and 2025 Summer Peak Conditions

Cont. No.	Cont. Name	2015 Summer Peak			2015 Winter Peak			2025 Summer Peak		
		Voltage Recovery		Stable?	Voltage Recovery		Stable?	Voltage Recovery		Stable?
		Less than .70 p.u.	Greater than 1.20 p.u.		Less than .70 p.u.	Greater than 1.20 p.u.		Less than .70 p.u.	Greater than 1.20 p.u.	
1	FLT01-3PH	No	No	Yes	No	No	Yes	No	No	Yes
2	FLT02-3PH	No	No	Yes	No	No	Yes	No	No	Yes
3	FLT03-3PH	No	No	Yes	No	No	Yes	No	No	Yes
4	FLT04-3PH	No	No	Yes	No	No	Yes	No	No	Yes
5	FLT05-3PH	No	No	Yes	No	No	Yes	No	No	Yes
6	FLT06-3PH	No	No	Yes	No	No	Yes	No	No	Yes
7	FLT07-3PH	No	No	Yes	No	No	Yes	No	No	Yes
8	FLT08-3PH	No	No	Yes	No	No	Yes	No	No	Yes
9	FLT09-3PH	No	No	Yes	No	No	Yes	No	No	Yes
10	FLT10-3PH	No	No	Yes	No	No	Yes	No	No	Yes
11	FLT11-3PH	No	No	Yes	No	No	Yes	No	No	Yes
12	FLT12-3PH	No	No	Yes	No	No	Yes	No	No	Yes

3.4 Stand Alone Scenario Stability Analysis Results: GEN-2014-065

The Stability Analysis determined that there were no contingencies that resulted in system instability, generation tripping offline, or voltage violations for the 2015 Summer Peak, 2015 Winter Peak, and 2025 Summer peak conditions when GEN-2014-065 was at 100% output.

Refer to Table 3-11 for a summary of the Stability Analysis results for the contingencies listed in Table 2-3 that corresponds to the GEN-2014-065 Stand Alone Analysis. Table 3-11 is a summary of the stability results for the 2015 Summer Peak, 2015 Winter Peak, and 2025 Summer Peak conditions and states whether the system remained stable or generation tripped offline and if acceptable voltage recovery was observed after the fault was cleared. Voltage recovery criteria includes ensuring that the transient voltage recovery is between 0.7 p.u. and 1.2 p.u. and ending in a steady state voltage (for N-1 contingencies) at the pre-contingent level or at least 0.9 p.u. If high or low voltages were observed the number of buses failing the voltage criteria was listed.

Several voltage buses were observed to be outside of the 0.95 p.u. to 1.05 p.u. range. All instances were observed for pre-fault condition and since all voltages restored to pre-fault conditions, no mitigation was required.

Refer to Appendix H for a complete set of plots for all the GEN-2014-065 Stand Alone Scenario contingencies for 2015 Summer Peak, 2015 Winter Peak, and 2025 Summer Peak conditions.

Table 3-11
Stand Alone Scenario GEN-2014-065: Stability Analysis Summary of Results for 2015 Winter, 2015 Summer, and 2025 Summer Peak Conditions

Cont. No.	Cont. Name	2015 Summer Peak			2015 Winter Peak			2025 Summer Peak		
		Voltage Recovery		Stable?	Voltage Recovery		Stable?	Voltage Recovery		Stable?
		Less than .70 p.u.	Greater than 1.20 p.u.		Less than .70 p.u.	Greater than 1.20 p.u.		Less than .70 p.u.	Greater than 1.20 p.u.	
13	FLT13-3PH	No	No	Yes	No	No	Yes	No	No	Yes
17	FLT22-3PH	No	No	Yes	No	No	Yes	No	No	Yes
18	FLT23-3PH	No	No	Yes	No	No	Yes	No	No	Yes
19	FLT24-3PH	No	No	Yes	No	No	Yes	No	No	Yes
20	FLT25-3PH	No	No	Yes	No	No	Yes	No	No	Yes
21	FLT28-3PH	No	No	Yes	No	No	Yes	No	No	Yes
25	FLT33-3PH	No	No	Yes	No	No	Yes	No	No	Yes
26	FLT34-3PH	No	No	Yes	No	No	Yes	No	No	Yes
27	FLT35-3PH	No	No	Yes	No	No	Yes	No	No	Yes
28	FLT38-3PH	No	No	Yes	No	No	Yes	No	No	Yes
29	FLT42-3PH	No	No	Yes	No	No	Yes	No	No	Yes
30	FLT45-3PH	No	No	Yes	No	No	Yes	No	No	Yes
31	FLT46-3PH	No	No	Yes	No	No	Yes	No	No	Yes
32	FLT47-3PH	No	No	Yes	No	No	Yes	No	No	Yes
55	FLT71-3PH	No	No	Yes	No	No	Yes	No	No	Yes
56	FLT72-3PH	No	No	Yes	No	No	Yes	No	No	Yes
86	FLT111-SB	No	No	Yes	No	No	Yes	No	No	Yes

3.5 Stand Alone Scenario Stability Analysis Results: GEN-2014-074

The Stability Analysis determined that there were no contingencies that resulted in system instability, generation tripping offline, or voltage violations for the 2015 Summer Peak, 2015 Winter Peak, and 2025 Summer peak conditions when GEN-2014-074 was at 100% output.

Refer to Table 3-12 for a summary of the Stability Analysis results for the contingencies listed in Table 2-3 that corresponds to the GEN-2014-074 Stand Alone Analysis. Table 3-12 is a summary of the stability results for the 2015 Summer Peak, 2015 Winter Peak, and 2025 Summer Peak conditions and states whether the system remained stable or generation tripped offline and if acceptable voltage recovery was observed after the fault was cleared. Voltage recovery criteria includes ensuring that the transient voltage recovery is between 0.7 p.u. and 1.2

p.u. and ending in a steady state voltage (for N-1 contingencies) at the pre-contingent level or at least 0.9 p.u. If high or low voltages were observed the number of buses failing the voltage criteria was listed.

Several voltage buses were observed to be outside of the 0.95 p.u. to 1.05 p.u. range. All instances were observed for pre-fault conditions and since all voltages returned to pre-fault conditions, no mitigation was required.

Refer to Appendix I for a complete set of plots for all the GEN-2014-074 Stand Alone Scenario contingencies for 2015 Summer Peak, 2015 Winter Peak, and 2025 Summer Peak conditions.

Table 3-12
Stand Alone Scenario GEN-2014-074: Stability Analysis Summary of Results for 2015 Winter, 2015 Summer, and 2025 Summer Peak Conditions

Cont. No.	Cont. Name	2015 Summer Peak			2015 Winter Peak			2025 Summer Peak		
		Voltage Recovery		Stable?	Voltage Recovery		Stable?	Voltage Recovery		Stable?
		Less than .70 p.u.	Greater than 1.20 p.u.		Less than .70 p.u.	Greater than 1.20 p.u.		Less than .70 p.u.	Greater than 1.20 p.u.	
58	FLT74-3PH	No	No	Yes	No	No	Yes	No	No	Yes
59	FLT75-3PH	No	No	Yes	No	No	Yes	No	No	Yes
60	FLT76-3PH	No	No	Yes	No	No	Yes	No	No	Yes
64	FLT80-3PH	No	No	Yes	No	No	Yes	No	No	Yes
66	FLT82-3PH	No	No	Yes	No	No	Yes	No	No	Yes
67	FLT88-3PH	No	No	Yes	No	No	Yes	No	No	Yes
70	FLT93-3PH	No	No	Yes	No	No	Yes	No	No	Yes
71	FLT94-3PH	No	No	Yes	No	No	Yes	No	No	Yes
72	FLT95-3PH	No	No	Yes	No	No	Yes	No	No	Yes
73	FLT96-3PH	No	No	Yes	No	No	Yes	No	No	Yes
75	FLT98-PO	No	No	Yes	No	No	Yes	No	No	Yes
87	FLT116-3PH	No	No	Yes	No	No	Yes	No	No	Yes
177	FLT214-3PH	No	No	Yes	No	No	Yes	No	No	Yes
178	FLT215-3PH	No	No	Yes	No	No	Yes	No	No	Yes
179	FLT216-3PH	No	No	Yes	No	No	Yes	No	No	Yes
180	FLT217-3PH	No	No	Yes	No	No	Yes	No	No	Yes
181	FLT218-3PH	No	No	Yes	No	No	Yes	No	No	Yes
182	FLT219-3PH	No	No	Yes	No	No	Yes	No	No	Yes
184	FLT221-3PH	No	No	Yes	No	No	Yes	Yes	Yes	Yes
190	FLT227-SB	No	No	Yes	No	No	Yes	No	No	Yes
191	FLT228-SB	No	No	Yes	No	No	Yes	No	No	Yes

3.6 Stand Alone Scenario Stability Analysis Results: GEN-2015-009

The Stability Analysis determined that there were no contingencies that resulted in system instability, generation tripping offline, or voltage violations for the 2015 Summer Peak, 2015 Winter Peak, and 2025 Summer peak conditions when GEN-2015-009 was at 100% output.

Refer to Table 3-13 for a summary of the Stability Analysis results for the contingencies listed in Table 2-3 that corresponds to the GEN-2105-009 Stand Alone Analysis. Table 3-13 is a summary of the stability results for the 2015 Summer Peak, 2015 Winter Peak, and 2025 Summer Peak conditions and states whether the system remained stable or generation tripped offline and if acceptable voltage recovery was observed after the fault was cleared. Voltage recovery criteria includes ensuring that the transient voltage recovery is between 0.7 p.u. and 1.2 p.u. and ending in a steady state voltage (for N-1 contingencies) at the pre-contingent level or at least 0.9 p.u. If high or low voltages were observed the number of buses failing the voltage criteria was listed.

Several voltage buses were observed to be outside of the 0.95 p.u. to 1.05 p.u. range. All instances were observed for pre-fault conditions and since all voltages returned to pre-fault conditions, no mitigation was required.

Refer to Appendix J for a complete set of plots for all the GEN-2015-009 Stand Alone Scenario contingencies for 2015 Summer Peak, 2015 Winter Peak, and 2025 Summer Peak conditions.

Table 3-13
Stand Alone Scenario GEN-2015-009: Stability Analysis Summary of Results for 2015 Winter, 2015 Summer, and 2025 Summer Peak Conditions

Cont. No.	Cont. Name	2015 Summer Peak			2015 Winter Peak			2025 Summer Peak		
		Voltage Recovery		Stable?	Voltage Recovery		Stable?	Voltage Recovery		Stable?
		Less than .70 p.u.	Greater than 1.20 p.u.		Less than .70 p.u.	Greater than 1.20 p.u.		Less than .70 p.u.	Greater than 1.20 p.u.	
4	FLT04-3PH	No	No	Yes	No	No	Yes	No	No	Yes
7	FLT07-3PH	No	No	Yes	No	No	Yes	No	No	Yes
8	FLT08-3PH	No	No	Yes	No	No	Yes	No	No	Yes
9	FLT09-3PH	No	No	Yes	No	No	Yes	No	No	Yes
13	FLT13-3PH	No	No	Yes	No	No	Yes	No	No	Yes
14	FLT14-3PH	No	No	Yes	No	No	Yes	No	No	Yes
15	FLT15-3PH	No	No	Yes	No	No	Yes	No	No	Yes
16	FLT16-3PH	No	No	Yes	No	No	Yes	No	No	Yes
86	FLT111-SB	No	No	Yes	No	No	Yes	No	No	Yes

3.7 Stand Alone Scenario Stability Analysis Results: GEN-2015-010

The Stability Analysis determined that there were no contingencies that resulted in system instability, generation tripping offline, or voltage violations for the 2015 Summer Peak, 2015 Winter Peak, and 2025 Summer peak conditions when GEN-2015-010 was at 100% output.

Refer to Table 3-14 for a summary of the Stability Analysis results for the contingencies listed in Table 2-3 that corresponds to the GEN-2015-010 Stand Alone Analysis. Table 3-14 is a summary of the stability results for the 2015 Summer Peak, 2015 Winter Peak, and 2025 Summer Peak conditions and states whether the system remained stable or generation tripped offline and if acceptable voltage recovery was observed after the fault was cleared. Voltage recovery criteria includes ensuring that the transient voltage recovery is between 0.7 p.u. and 1.2 p.u. and ending in a steady state voltage (for N-1 contingencies) at the pre-contingent level or at least 0.9 p.u. If high or low voltages were observed the number of buses failing the voltage criteria was listed.

Several voltage buses were observed to be outside of the 0.95 p.u. to 1.05 p.u. range. All instances were observed for pre-fault conditions and since all voltages returned to pre-fault conditions, no mitigation was required.

Refer to Appendix K for a complete set of plots for all the GEN-2015-010 Stand Alone Scenario contingencies for 2015 Summer Peak, 2015 Winter Peak, and 2025 Summer Peak conditions.

Table 3-14
Stand Alone Scenario GEN-2015-010: Stability Analysis Summary of Results for 2015 Winter, 2015 Summer, and 2025 Summer Peak Conditions

Cont. No.	Cont. Name	2015 Summer Peak			2015 Winter Peak			2025 Summer Peak		
		Voltage Recovery		Stable?	Voltage Recovery		Stable?	Voltage Recovery		Stable?
		Less than .70 p.u.	Greater than 1.20 p.u.		Less than .70 p.u.	Greater than 1.20 p.u.		Less than .70 p.u.	Greater than 1.20 p.u.	
35	FLT50-3PH	No	No	Yes	No	No	Yes	No	No	Yes
47	FLT62-3PH	No	No	Yes	No	No	Yes	No	No	Yes
48	FLT63-SB	No	No	Yes	No	No	Yes	No	No	Yes
53	FLT69-PO	No	No	Yes	No	No	Yes	No	No	Yes
54	FLT70-SB	No	No	Yes	No	No	Yes	No	No	Yes
77	FLT100-3PH	No	No	Yes	No	No	Yes	No	No	Yes
78	FLT101-3PH	No	No	Yes	No	No	Yes	No	No	Yes

Table 3-14 (Continued)
Stand Alone Scenario GEN-2015-010: Stability Analysis Summary of Results for 2015 Winter, 2015 Summer, and 2025 Summer Peak Conditions

Cont. No.	Cont. Name	2015 Summer Peak			2015 Winter Peak			2025 Summer Peak		
		Voltage Recovery		Stable?	Voltage Recovery		Stable?	Voltage Recovery		Stable?
		Less than .70 p.u.	Greater than 1.20 p.u.		Less than .70 p.u.	Greater than 1.20 p.u.		Less than .70 p.u.	Greater than 1.20 p.u.	
79	FLT102-3PH	No	No	Yes	No	No	Yes	No	No	Yes
80	FLT103-3PH	No	No	Yes	No	No	Yes	No	No	Yes
81	FLT104-3PH	No	No	Yes	No	No	Yes	No	No	Yes
82	FLT105-3PH	No	No	Yes	No	No	Yes	No	No	Yes
83	FLT106-3PH	No	No	Yes	No	No	Yes	No	No	Yes
84	FLT107-3PH	No	No	Yes	No	No	Yes	No	No	Yes
85	FLT108-3PH	No	No	Yes	No	No	Yes	No	No	Yes
112	FLT148-3PH	No	No	Yes	No	No	Yes	No	No	Yes
113	FLT150-3PH	No	No	Yes	No	No	Yes	No	No	Yes
114	FLT151-3PH	No	No	Yes	No	No	Yes	No	No	Yes
115	FLT152-3PH	No	No	Yes	No	No	Yes	No	No	Yes
116	FLT153-3PH	No	No	Yes	No	No	Yes	No	No	Yes
117	FLT154-3PH	No	No	Yes	No	No	Yes	No	No	Yes
118	FLT155-3PH	No	No	Yes	No	No	Yes	No	No	Yes
119	FLT156-3PH	No	No	Yes	No	No	Yes	No	No	Yes
120	FLT157-3PH	No	No	Yes	No	No	Yes	No	No	Yes
121	FLT158-3PH	No	No	Yes	No	No	Yes	No	No	Yes
122	FLT159-3PH	No	No	Yes	No	No	Yes	No	No	Yes
123	FLT160-3PH	No	No	Yes	No	No	Yes	No	No	Yes
124	FLT161-3PH	No	No	Yes	No	No	Yes	No	No	Yes
125	FLT162-3PH	No	No	Yes	No	No	Yes	No	No	Yes
128	FLT165-3PH	No	No	Yes	No	No	Yes	No	No	Yes
129	FLT166-3PH	No	No	Yes	No	No	Yes	No	No	Yes
130	FLT167-3PH	No	No	Yes	No	No	Yes	No	No	Yes
131	FLT168-3PH	No	No	Yes	No	No	Yes	No	No	Yes
132	FLT169-3PH	No	No	Yes	No	No	Yes	No	No	Yes
133	FLT170-3PH	No	No	Yes	No	No	Yes	No	No	Yes
134	FLT171-3PH	No	No	Yes	No	No	Yes	No	No	Yes
135	FLT172-3PH	No	No	Yes	No	No	Yes	No	No	Yes
136	FLT173-3PH	No	No	Yes	No	No	Yes	No	No	Yes

3.8 Stand Alone Scenario Stability Analysis Results: GEN-2015-014

The Stability Analysis determined that there were no contingencies that resulted in system instability, generation tripping offline, or voltage violations for the 2015 Summer Peak, 2015 Winter Peak, and 2025 Summer peak conditions when GEN-2015-014 was at 100% output.

Refer to Table 3-15 for a summary of the Stability Analysis results for the contingencies listed in Table 2-3 that corresponds to the GEN-2015-014 Stand Alone Analysis. Table 3-15 is a summary of the stability results for the 2015 Summer Peak, 2015 Winter Peak, and 2025 Summer Peak conditions and states whether the system remained stable or generation tripped offline and if acceptable voltage recovery was observed after the fault was cleared. Voltage recovery criteria includes ensuring that the transient voltage recovery is between 0.7 p.u. and 1.2 p.u. and ending in a steady state voltage (for N-1 contingencies) at the pre-contingent level or at least 0.9 p.u. If high or low voltages were observed the number of buses failing the voltage criteria was listed.

Several voltage buses were observed to be outside of the 0.95 p.u. to 1.05 p.u. range. All instances were observed for pre-fault conditions and since all voltages returned to pre-fault conditions, no mitigation was required.

Refer to Appendix L for a complete set of plots for all the GEN-2015-014 Stand Alone Scenario contingencies for 2015 Summer Peak, 2015 Winter Peak, and 2025 Summer Peak conditions.

Table 3-15
Stand Alone Scenario GEN-2015-014: Stability Analysis Summary of Results for 2015 Winter, 2015 Summer, and 2025 Summer Peak Conditions

Cont. No.	Cont. Name	2015 Summer Peak			2015 Winter Peak			2025 Summer Peak		
		Voltage Recovery		Stable?	Voltage Recovery		Stable?	Voltage Recovery		Stable?
		Less than .70 p.u.	Greater than 1.20 p.u.		Less than .70 p.u.	Greater than 1.20 p.u.		Less than .70 p.u.	Greater than 1.20 p.u.	
37	FLT52-SB	No	No	Yes	No	No	Yes	No	No	Yes
38	FLT53-3PH	No	No	Yes	No	No	Yes	No	No	Yes
39	FLT54-SB	No	No	Yes	No	No	Yes	No	No	Yes
40	FLT55-3PH	No	No	Yes	No	No	Yes	No	No	Yes
41	FLT56-3PH	No	No	Yes	No	No	Yes	No	No	Yes
42	FLT57-3PH	No	No	Yes	No	No	Yes	No	No	Yes
43	FLT58-3PH	No	No	Yes	No	No	Yes	No	No	Yes
44	FLT59-3PH	No	No	Yes	No	No	Yes	No	No	Yes
45	FLT60-PO	No	No	Yes	No	No	Yes	No	No	Yes
46	FLT61-SB	No	No	Yes	No	No	Yes	No	No	Yes
87	FLT116-3PH	No	No	Yes	No	No	Yes	No	No	Yes
161	FLT198-3PH	No	No	Yes	No	No	Yes	No	No	Yes
162	FLT199-3PH	No	No	Yes	No	No	Yes	No	No	Yes
163	FLT200-3PH	No	No	Yes	No	No	Yes	No	No	Yes
164	FLT201-3PH	No	No	Yes	No	No	Yes	No	No	Yes
165	FLT202-3PH	No	No	Yes	No	No	Yes	No	No	Yes
166	FLT203-3PH	No	No	Yes	No	No	Yes	No	No	Yes
167	FLT204-3PH	No	No	Yes	No	No	Yes	No	No	Yes
168	FLT205-3PH	No	No	Yes	No	No	Yes	No	No	Yes
169	FLT206-3PH	No	No	Yes	No	No	Yes	No	No	Yes
170	FLT207-3PH	No	No	Yes	No	No	Yes	No	No	Yes
171	FLT208-3PH	No	No	Yes	No	No	Yes	No	No	Yes
172	FLT209-3PH	No	No	Yes	No	No	Yes	No	No	Yes
173	FLT210-3PH	No	No	Yes	No	No	Yes	No	No	Yes
174	FLT211-3PH	No	No	Yes	No	No	Yes	No	No	Yes
175	FLT212-3PH	No	No	Yes	No	No	Yes	No	No	Yes
176	FLT213-3PH	No	No	Yes	No	No	Yes	No	No	Yes

3.9 Stand Alone Scenario Stability Analysis Results: GEN-2015-018

The Stability Analysis determined that there were no contingencies that resulted in system instability, generation tripping offline, or voltage violations for the 2015 Summer Peak, 2015 Winter Peak, and 2025 Summer peak conditions when GEN-2015-018 was at 100% output.

Refer to Table 3-16 for a summary of the Stability Analysis results for the contingencies listed in Table 2-3 that corresponds to the GEN-2015-018 Stand Alone Analysis. Table 3-16 is a summary of the stability results for the 2015 Summer Peak, 2015 Winter Peak, and 2025 Summer Peak conditions and states whether the system remained stable or generation tripped offline and if acceptable voltage recovery was observed after the fault was cleared. Voltage recovery criteria includes ensuring that the transient voltage recovery is between 0.7 p.u. and 1.2 p.u. and ending in a steady state voltage (for N-1 contingencies) at the pre-contingent level or at least 0.9 p.u. If high or low voltages were observed the number of buses failing the voltage criteria was listed.

Several voltage buses were observed to be outside of the 0.95 p.u. to 1.05 p.u. range. All instances were observed for pre-fault conditions and since all voltages returned to pre-fault conditions, no mitigation was required.

Refer to Appendix M for a complete set of plots for all the GEN-2015-018 Stand Alone Scenario contingencies for 2015 Summer Peak, 2015 Winter Peak, and 2025 Summer Peak conditions.

Table 3-16
Stand Alone Scenario GEN-2015-018: Stability Analysis Summary of Results for 2015 Winter, 2015 Summer, and 2025 Summer Peak Conditions

Cont. No.	Cont. Name	2015 Summer Peak			2015 Winter Peak			2025 Summer Peak		
		Voltage Recovery		Stable?	Voltage Recovery		Stable?	Voltage Recovery		Stable?
		Less than .70 p.u.	Greater than 1.20 p.u.		Less than .70 p.u.	Greater than 1.20 p.u.		Less than .70 p.u.	Greater than 1.20 p.u.	
35	FLT50-3PH	No	No	Yes	No	No	Yes	No	No	Yes
47	FLT62-3PH	No	No	Yes	No	No	Yes	No	No	Yes
48	FLT63-SB	No	No	Yes	No	No	Yes	No	No	Yes
77	FLT100-3PH	No	No	Yes	No	No	Yes	No	No	Yes
78	FLT101-3PH	No	No	Yes	No	No	Yes	No	No	Yes
79	FLT102-3PH	No	No	Yes	No	No	Yes	No	No	Yes
80	FLT103-3PH	No	No	Yes	No	No	Yes	No	No	Yes
81	FLT104-3PH	No	No	Yes	No	No	Yes	No	No	Yes
82	FLT105-3PH	No	No	Yes	No	No	Yes	No	No	Yes
83	FLT106-3PH	No	No	Yes	No	No	Yes	No	No	Yes
84	FLT107-3PH	No	No	Yes	No	No	Yes	No	No	Yes
85	FLT108-3PH	No	No	Yes	No	No	Yes	No	No	Yes
112	FLT148-3PH	No	No	Yes	No	No	Yes	No	No	Yes
113	FLT150-3PH	No	No	Yes	No	No	Yes	No	No	Yes
114	FLT151-3PH	No	No	Yes	No	No	Yes	No	No	Yes

Table 3-16 (Continued)
Stand Alone Scenario GEN-2015-018: Stability Analysis Summary of Results for 2015 Winter, 2015 Summer, and 2025 Summer Peak Conditions

Cont. No.	Cont. Name	2015 Summer Peak			2015 Winter Peak			2025 Summer Peak		
		Voltage Recovery		Stable?	Voltage Recovery		Stable?	Voltage Recovery		Stable?
		Less than .70 p.u.	Greater than 1.20 p.u.		Less than .70 p.u.	Greater than 1.20 p.u.		Less than .70 p.u.	Greater than 1.20 p.u.	
115	FLT152-3PH	No	No	Yes	No	No	Yes	No	No	Yes
116	FLT153-3PH	No	No	Yes	No	No	Yes	No	No	Yes
117	FLT154-3PH	No	No	Yes	No	No	Yes	No	No	Yes
118	FLT155-3PH	No	No	Yes	No	No	Yes	No	No	Yes
119	FLT156-3PH	No	No	Yes	No	No	Yes	No	No	Yes
120	FLT157-3PH	No	No	Yes	No	No	Yes	No	No	Yes
121	FLT158-3PH	No	No	Yes	No	No	Yes	No	No	Yes
122	FLT159-3PH	No	No	Yes	No	No	Yes	No	No	Yes
123	FLT160-3PH	No	No	Yes	No	No	Yes	No	No	Yes
124	FLT161-3PH	No	No	Yes	No	No	Yes	No	No	Yes
125	FLT162-3PH	No	No	Yes	No	No	Yes	No	No	Yes
128	FLT165-3PH	No	No	Yes	No	No	Yes	No	No	Yes
129	FLT166-3PH	No	No	Yes	No	No	Yes	No	No	Yes
130	FLT167-3PH	No	No	Yes	No	No	Yes	No	No	Yes
131	FLT168-3PH	No	No	Yes	No	No	Yes	No	No	Yes
132	FLT169-3PH	No	No	Yes	No	No	Yes	No	No	Yes
133	FLT170-3PH	No	No	Yes	No	No	Yes	No	No	Yes
134	FLT171-3PH	No	No	Yes	No	No	Yes	No	No	Yes
135	FLT172-3PH	No	No	Yes	No	No	Yes	No	No	Yes
136	FLT173-3PH	No	No	Yes	No	No	Yes	No	No	Yes

3.10 Stand Alone Scenario Stability Analysis Results: GEN-2015-020

The Stability Analysis determined that there were no contingencies that resulted in system instability, generation tripping offline, or voltage violations for the 2015 Summer Peak, 2015 Winter Peak, and 2025 Summer peak conditions when GEN-2015-020 was at 100% output.

Refer to Table 3-17 for a summary of the Stability Analysis results for the contingencies listed in Table 2-3 that corresponds to the GEN-2015-020 Stand Alone Analysis. Table 3-17 is a summary of the stability results for the 2015 Summer Peak, 2015 Winter Peak, and 2025 Summer Peak conditions and states whether the system remained stable or generation tripped offline and if acceptable voltage recovery was observed after the fault was cleared. Voltage recovery criteria includes ensuring that the transient voltage recovery is between 0.7 p.u. and 1.2

p.u. and ending in a steady state voltage (for N-1 contingencies) at the pre-contingent level or at least 0.9 p.u. If high or low voltages were observed the number of buses failing the voltage criteria was listed.

Several voltage buses were observed to be outside of the 0.95 p.u. to 1.05 p.u. range. All instances were observed for pre-fault conditions and since all voltages returned to pre-fault conditions, no mitigation was required.

Refer to Appendix N for a complete set of plots for all the GEN-2015-020 Stand Alone Scenario contingencies for 2015 Summer Peak, 2015 Winter Peak, and 2025 Summer Peak conditions.

Table 3-17
Stand Alone Scenario GEN-2015-020: Stability Analysis Summary of Results for 2015 Winter, 2015 Summer, and 2025 Summer Peak Conditions

Cont. No.	Cont. Name	2015 Summer Peak			2015 Winter Peak			2025 Summer Peak		
		Voltage Recovery		Stable?	Voltage Recovery		Stable?	Voltage Recovery		Stable?
		Less than .70 p.u.	Greater than 1.20 p.u.		Less than .70 p.u.	Greater than 1.20 p.u.		Less than .70 p.u.	Greater than 1.20 p.u.	
35	FLT50-3PH	No	No	Yes	No	No	Yes	No	No	Yes
47	FLT62-3PH	No	No	Yes	No	No	Yes	No	No	Yes
48	FLT63-SB	No	No	Yes	No	No	Yes	No	No	Yes
77	FLT100-3PH	No	No	Yes	No	No	Yes	No	No	Yes
78	FLT101-3PH	No	No	Yes	No	No	Yes	No	No	Yes
79	FLT102-3PH	No	No	Yes	No	No	Yes	No	No	Yes
80	FLT103-3PH	No	No	Yes	No	No	Yes	No	No	Yes
81	FLT104-3PH	No	No	Yes	No	No	Yes	No	No	Yes
82	FLT105-3PH	No	No	Yes	No	No	Yes	No	No	Yes
83	FLT106-3PH	No	No	Yes	No	No	Yes	No	No	Yes
84	FLT107-3PH	No	No	Yes	No	No	Yes	No	No	Yes
85	FLT108-3PH	No	No	Yes	No	No	Yes	No	No	Yes
112	FLT148-3PH	No	No	Yes	No	No	Yes	No	No	Yes
113	FLT150-3PH	No	No	Yes	No	No	Yes	No	No	Yes
114	FLT151-3PH	No	No	Yes	No	No	Yes	No	No	Yes
115	FLT152-3PH	No	No	Yes	No	No	Yes	No	No	Yes
116	FLT153-3PH	No	No	Yes	No	No	Yes	No	No	Yes
117	FLT154-3PH	No	No	Yes	No	No	Yes	No	No	Yes
118	FLT155-3PH	No	No	Yes	No	No	Yes	No	No	Yes
119	FLT156-3PH	No	No	Yes	No	No	Yes	No	No	Yes
120	FLT157-3PH	No	No	Yes	No	No	Yes	No	No	Yes

Table 3-17 (Continued)
Stand Alone Scenario GEN-2015-020: Stability Analysis Summary of Results for 2015 Winter, 2015 Summer, and 2025 Summer Peak Conditions

Cont. No.	Cont. Name	2015 Summer Peak			2015 Winter Peak			2025 Summer Peak		
		Voltage Recovery		Stable?	Voltage Recovery		Stable?	Voltage Recovery		Stable?
		Less than .70 p.u.	Greater than 1.20 p.u.		Less than .70 p.u.	Greater than 1.20 p.u.		Less than .70 p.u.	Greater than 1.20 p.u.	
121	FLT158-3PH	No	No	Yes	No	No	Yes	No	No	Yes
122	FLT159-3PH	No	No	Yes	No	No	Yes	No	No	Yes
123	FLT160-3PH	No	No	Yes	No	No	Yes	No	No	Yes
124	FLT161-3PH	No	No	Yes	No	No	Yes	No	No	Yes
125	FLT162-3PH	No	No	Yes	No	No	Yes	No	No	Yes
128	FLT165-3PH	No	No	Yes	No	No	Yes	No	No	Yes
129	FLT166-3PH	No	No	Yes	No	No	Yes	No	No	Yes
130	FLT167-3PH	No	No	Yes	No	No	Yes	No	No	Yes
131	FLT168-3PH	No	No	Yes	No	No	Yes	No	No	Yes
132	FLT169-3PH	No	No	Yes	No	No	Yes	No	No	Yes
133	FLT170-3PH	No	No	Yes	No	No	Yes	No	No	Yes
134	FLT171-3PH	No	No	Yes	No	No	Yes	No	No	Yes
135	FLT172-3PH	No	No	Yes	No	No	Yes	No	No	Yes
136	FLT173-3PH	No	No	Yes	No	No	Yes	No	No	Yes

3.11 Stand Alone Scenario Stability Analysis Results: GEN-2015-022

The Stability Analysis determined that there were no contingencies that resulted in system instability, generation tripping offline, or voltage violations for the 2015 Summer Peak, 2015 Winter Peak, and 2025 Summer peak conditions when GEN-2015-022 was at 100% output.

Refer to Table 3-18 for a summary of the Stability Analysis results for the contingencies listed in Table 2-3 that corresponds to the GEN-2015-022 Stand Alone Analysis. Table 3-18 is a summary of the stability results for the 2015 Summer Peak, 2015 Winter Peak, and 2025 Summer Peak conditions and states whether the system remained stable or generation tripped offline and if acceptable voltage recovery was observed after the fault was cleared. Voltage recovery criteria includes ensuring that the transient voltage recovery is between 0.7 p.u. and 1.2 p.u. and ending in a steady state voltage (for N-1 contingencies) at the pre-contingent level or at least 0.9 p.u. If high or low voltages were observed the number of buses failing the voltage criteria was listed.

Several voltage buses were observed to be outside of the 0.95 p.u. to 1.05 p.u. range. All instances were observed for pre-fault conditions and since all voltages returned to pre-fault conditions, no mitigation was required.

Refer to Appendix O for a complete set of plots for all the GEN-2015-022 Stand Alone Scenario contingencies for 2015 Summer Peak, 2015 Winter Peak, and 2025 Summer Peak conditions.

Table 3-18
Stand Alone Scenario GEN-2015-022: Stability Analysis Summary of Results for 2015 Winter, 2015 Summer, and 2025 Summer Peak Conditions

Cont. No.	Cont. Name	2015 Summer Peak			2015 Winter Peak			2025 Summer Peak		
		Voltage Recovery		Stable?	Voltage Recovery		Stable?	Voltage Recovery		Stable?
		Less than .70 p.u.	Greater than 1.20 p.u.		Less than .70 p.u.	Greater than 1.20 p.u.		Less than .70 p.u.	Greater than 1.20 p.u.	
57	FLT73-3PH	No	No	Yes	No	No	Yes	No	No	Yes
66	FLT82-3PH	No	No	Yes	No	No	Yes	No	No	Yes
67	FLT88-3PH	No	No	Yes	No	No	Yes	No	No	Yes
69	FLT91-3PH	No	No	Yes	No	No	Yes	No	No	Yes
74	FLT97-3PH	No	No	Yes	No	No	Yes	No	No	Yes
75	FLT98-PO	No	No	Yes	No	No	Yes	No	No	Yes
87	FLT116-3PH	No	No	Yes	No	No	Yes	No	No	Yes
137	FLT174-3PH	No	No	Yes	No	No	Yes	No	No	Yes
138	FLT175-3PH	No	No	Yes	No	No	Yes	No	No	Yes
139	FLT176-3PH	No	No	Yes	No	No	Yes	No	No	Yes
140	FLT177-3PH	No	No	Yes	No	No	Yes	No	No	Yes
141	FLT178-3PH	No	No	Yes	No	No	Yes	No	No	Yes
142	FLT179-3PH	No	No	Yes	No	No	Yes	No	No	Yes
143	FLT180-3PH	No	No	Yes	No	No	Yes	No	No	Yes
144	FLT181-3PH	No	No	Yes	No	No	Yes	No	No	Yes
145	FLT182-3PH	No	No	Yes	No	No	Yes	No	No	Yes
146	FLT183-3PH	No	No	Yes	No	No	Yes	No	No	Yes
147	FLT184-3PH	No	No	Yes	No	No	Yes	No	No	Yes
148	FLT185-3PH	No	No	Yes	No	No	Yes	No	No	Yes
149	FLT186-3PH	No	No	Yes	No	No	Yes	No	No	Yes
150	FLT187-3PH	No	No	Yes	No	No	Yes	No	No	Yes
151	FLT188-3PH	No	No	Yes	No	No	Yes	No	No	Yes
152	FLT189-3PH	No	No	Yes	No	No	Yes	No	No	Yes
153	FLT190-3PH	No	No	Yes	No	No	Yes	No	No	Yes

Table 3-18 (Continued)
Stand Alone Scenario GEN-2015-022: Stability Analysis Summary of Results for 2015 Winter, 2015 Summer, and 2025 Summer Peak Conditions

Cont. No.	Cont. Name	2015 Summer Peak			2015 Winter Peak			2025 Summer Peak		
		Voltage Recovery		Stable?	Voltage Recovery		Stable?	Voltage Recovery		Stable?
		Less than .70 p.u.	Greater than 1.20 p.u.		Less than .70 p.u.	Greater than 1.20 p.u.		Less than .70 p.u.	Greater than 1.20 p.u.	
154	FLT191-3PH	No	No	Yes	No	No	Yes	No	No	Yes
155	FLT192-3PH	No	No	Yes	No	No	Yes	No	No	Yes
156	FLT193-3PH	No	No	Yes	No	No	Yes	No	No	Yes
157	FLT194-3PH	No	No	Yes	No	No	Yes	No	No	Yes
158	FLT195-3PH	No	No	Yes	No	No	Yes	No	No	Yes
159	FLT196-3PH	No	No	Yes	No	No	Yes	No	No	Yes
160	FLT197-3PH	No	No	Yes	No	No	Yes	No	No	Yes

3.12 Stand Alone Scenario Stability Analysis Results: ASGI-2015-002

The Stability Analysis determined that there were no contingencies that resulted in system instability, generation tripping offline, or voltage violations for the 2015 Summer Peak, 2015 Winter Peak, and 2025 Summer peak conditions when ASGI-2015-002 was at 100% output.

Refer to Table 3-19 for a summary of the Stability Analysis results for the contingencies listed in Table 2-3 that corresponds to the ASGI-2015-002 Stand Alone Analysis. Table 3-19 is a summary of the stability results for the 2015 Summer Peak, 2015 Winter Peak, and 2025 Summer Peak conditions and states whether the system remained stable or generation tripped offline and if acceptable voltage recovery was observed after the fault was cleared. Voltage recovery criteria includes ensuring that the transient voltage recovery is between 0.7 p.u. and 1.2 p.u. and ending in a steady state voltage (for N-1 contingencies) at the pre-contingent level or at least 0.9 p.u. If high or low voltages were observed the number of buses failing the voltage criteria was listed.

Several voltage buses were observed to be outside of the 0.95 p.u. to 1.05 p.u. range. All instances were observed for pre-fault conditions and since all voltages returned to pre-fault conditions, no mitigation was required.

Refer to Appendix P for a complete set of plots for all the ASGI-2015-002 Stand Alone Scenario contingencies for 2015 Summer Peak, 2015 Winter Peak, and 2025 Summer Peak conditions.

Table 3-19
Stand Alone Scenario ASGI-2015-002: Stability Analysis Summary of Results for 2015 Winter, 2015 Summer, and 2025 Summer Peak Conditions

Cont. No.	Cont. Name	2015 Summer Peak			2015 Winter Peak			2025 Summer Peak		
		Voltage Recovery		Stable?	Voltage Recovery		Stable?	Voltage Recovery		Stable?
		Less than .70 p.u.	Greater than 1.20 p.u.		Less than .70 p.u.	Greater than 1.20 p.u.		Less than .70 p.u.	Greater than 1.20 p.u.	
60	FLT76-3PH	No	No	Yes	No	No	Yes	No	No	Yes
61	FLT77-3PH	No	No	Yes	No	No	Yes	No	No	Yes
62	FLT78-3PH	No	No	Yes	No	No	Yes	No	No	Yes
63	FLT79-3PH	No	No	Yes	No	No	Yes	No	No	Yes
64	FLT80-3PH	No	No	Yes	No	No	Yes	No	No	Yes
65	FLT81-3PH	No	No	Yes	No	No	Yes	No	No	Yes
70	FLT93-3PH	No	No	Yes	No	No	Yes	No	No	Yes
71	FLT94-3PH	No	No	Yes	No	No	Yes	No	No	Yes
72	FLT95-3PH	No	No	Yes	No	No	Yes	No	No	Yes
73	FLT96-3PH	No	No	Yes	No	No	Yes	No	No	Yes
75	FLT98-PO	No	No	Yes	No	No	Yes	No	No	Yes
87	FLT116-3PH	No	No	Yes	No	No	Yes	No	No	Yes
95	FLT132-3PH	No	No	Yes	No	No	Yes	No	No	Yes
96	FLT133-3PH	No	No	Yes	No	No	Yes	No	No	Yes
97	FLT134-3PH	No	No	Yes	No	No	Yes	No	No	Yes
98	FLT135-3PH	No	No	Yes	No	No	Yes	No	No	Yes
99	FLT136-3PH	No	No	Yes	No	No	Yes	No	No	Yes
100	FLT137-3PH	No	No	Yes	No	No	Yes	No	No	Yes
101	FLT138-3PH	No	No	Yes	No	No	Yes	No	No	Yes
102	FLT139-3PH	No	No	Yes	No	No	Yes	No	No	Yes
103	FLT140-3PH	No	No	Yes	No	No	Yes	No	No	Yes
104	FLT141-3PH	No	No	Yes	No	No	Yes	No	No	Yes
105	FLT142-3PH	No	No	Yes	No	No	Yes	No	No	Yes
106	FLT143-3PH	No	No	Yes	No	No	Yes	No	No	Yes
107	FLT144-3PH	No	No	Yes	No	No	Yes	No	No	Yes
108	FLT145-3PH	No	No	Yes	No	No	Yes	No	No	Yes
109	FLT146-3PH	No	No	Yes	No	No	Yes	No	No	Yes
110	FLT147-3PH	No	No	Yes	No	No	Yes	No	No	Yes
111	FLT148-3PH	No	No	Yes	No	No	Yes	No	No	Yes

3.13 Stand Alone Scenario Stability Analysis Results: ASGI-2015-003

The Stability Analysis determined that there were no contingencies that resulted in system instability, generation tripping offline, or voltage violations for the 2015 Summer Peak, 2015 Winter Peak, and 2025 Summer peak conditions when ASGI-2015-003 was at 100% output.

Refer to Table 3-20 for a summary of the Stability Analysis results for the contingencies listed in Table 2-3 that corresponds to the ASGI-2015-003 Stand Alone Analysis. Table 3-20 is a summary of the stability results for the 2015 Summer Peak, 2015 Winter Peak, and 2025 Summer Peak conditions and states whether the system remained stable or generation tripped offline and if acceptable voltage recovery was observed after the fault was cleared. Voltage recovery criteria includes ensuring that the transient voltage recovery is between 0.7 p.u. and 1.2 p.u. and ending in a steady state voltage (for N-1 contingencies) at the pre-contingent level or at least 0.9 p.u. If high or low voltages were observed the number of buses failing the voltage criteria was listed.

Several voltage buses were observed to be outside of the 0.95 p.u. to 1.05 p.u. range. All instances were observed for pre-fault conditions and since all voltages returned to pre-fault conditions, no mitigation was required.

Refer to Appendix Q for a complete set of plots for all the ASGI-2015-003 Stand Alone Scenario contingencies for 2015 Summer Peak, 2015 Winter Peak, and 2025 Summer Peak conditions.

Table 3-20
Stand Alone Scenario ASGI-2015-003: Stability Analysis Summary of Results for 2015 Winter, 2015 Summer, and 2025 Summer Peak Conditions

Cont. No.	Cont. Name	2015 Summer Peak			2015 Winter Peak			2025 Summer Peak		
		Voltage Recovery		Stable?	Voltage Recovery		Stable?	Voltage Recovery		Stable?
		Less than .70 p.u.	Greater than 1.20 p.u.		Less than .70 p.u.	Greater than 1.20 p.u.		Less than .70 p.u.	Greater than 1.20 p.u.	
76	FLT99-3PH	No	No	Yes	No	No	Yes	No	No	Yes
77	FLT100-3PH	No	No	Yes	No	No	Yes	No	No	Yes
78	FLT101-3PH	No	No	Yes	No	No	Yes	No	No	Yes
79	FLT102-3PH	No	No	Yes	No	No	Yes	No	No	Yes
80	FLT103-3PH	No	No	Yes	No	No	Yes	No	No	Yes
81	FLT104-3PH	No	No	Yes	No	No	Yes	No	No	Yes
82	FLT105-3PH	No	No	Yes	No	No	Yes	No	No	Yes
83	FLT106-3PH	No	No	Yes	No	No	Yes	No	No	Yes
84	FLT107-3PH	No	No	Yes	No	No	Yes	No	No	Yes
85	FLT108-3PH	No	No	Yes	No	No	Yes	No	No	Yes

Table 3-20 (Continued)
Stand Alone Scenario ASGI-2015-003: Stability Analysis Summary of Results for 2015 Winter, 2015 Summer, and 2025 Summer Peak Conditions

Cont. No.	Cont. Name	2015 Summer Peak			2015 Winter Peak			2025 Summer Peak		
		Voltage Recovery		Stable?	Voltage Recovery		Stable?	Voltage Recovery		Stable?
		Less than .70 p.u.	Greater than 1.20 p.u.		Less than .70 p.u.	Greater than 1.20 p.u.		Less than .70 p.u.	Greater than 1.20 p.u.	
89	FLT122-3PH	No	No	Yes	No	No	Yes	No	No	Yes
117	FLT154-3PH	No	No	Yes	No	No	Yes	No	No	Yes
118	FLT155-3PH	No	No	Yes	No	No	Yes	No	No	Yes
119	FLT156-3PH	No	No	Yes	No	No	Yes	No	No	Yes
120	FLT157-3PH	No	No	Yes	No	No	Yes	No	No	Yes
121	FLT158-3PH	No	No	Yes	No	No	Yes	No	No	Yes
122	FLT159-3PH	No	No	Yes	No	No	Yes	No	No	Yes
123	FLT160-3PH	No	No	Yes	No	No	Yes	No	No	Yes

SECTION 4: SHORT CIRCUIT ANALYSIS

The objective of this task is to quantify the three-phase to ground fault currents for the 2025 Summer Peak season for each interconnecting generator.

4.1 Approach

The short-circuit analysis will assess breaker adequacy and fault duties for the generator interconnection bus and five buses away from the point of interconnection. MEPPI will assume no outages to find maximum short-circuit currents that flow through the breaker. The Automatic Sequencing Fault Calculation (ASCC) function in PSS/E was utilized to perform this task. FLAT conditions were applied to pre-fault conditions and the following adjustments were utilized:

- All synchronous and asynchronous machine P and Q output was set to zero
- All transformer tap ratios were set to 1.0 p.u. and all phase shift angles were set to zero
- All generator reactance's were fixed to the subtransient reactance
- All line charging was set to zero
- All shunts were set to zero
- All loads were set to zero
- All pre-fault bus voltages were set to 1.0 p.u. and a phase shift angle of zero

Note upgrades found to be necessary for the Stability Analysis were included in the Short-Circuit Analysis.

4.2 Short Circuit Results

The maximum fault current for each bus is provided for the 2025 Summer Peak condition. The following tables show the short circuit results for the study generators:

- Table 4-1: Short Circuit Analysis for GEN-2014-046
- Table 4-2: Short Circuit Analysis for GEN-2014-065
- Table 4-3: Short Circuit Analysis for GEN-2014-074
- Table 4-4: Short Circuit Analysis for GEN-2015-009
- Table 4-5: Short Circuit Analysis for GEN-2015-010
- Table 4-6: Short Circuit Analysis for GEN-2015-014
- Table 4-7: Short Circuit Analysis for GEN-2015-018
- Table 4-8: Short Circuit Analysis for GEN-2015-020
- Table 4-9: Short Circuit Analysis for GEN-2015-022
- Table 4-10: Short Circuit Analysis for ASGI-2015-002
- Table 4-11: Short Circuit Analysis for ASGI-2015-003

Table 4-1
Short Circuit Analysis for Study Project GEN-2014-046

Bus Number	Bus Name	Bus Voltage (kV)	Fault Current 3-LG (kA)	Bus Number	Bus Name	Bus Voltage (kV)	Fault Current 3-LG (kA)	Bus Number	Bus Name	Bus Voltage (kV)	Fault Current 3-LG (kA)
524768	PLSNT_HILL 3	115	9.79	527536	BRASHER 3	115	4.80	527894	HOBBS_INT 6	230	19.53
524770	PLSNT_HILL 6	230	6.51	527540	CAPITAN 2	69	2.22	527963	POTASH_JCT 6	230	7.01
524797	PERIMETER 3	115	6.38	527541	CAPITAN 3	115	4.43	528070	CV-AZMESA 3	115	7.35
524863	FE-CHZPLT 3	115	7.89	527546	SAMSON 3	115	5.05	528094	7-RIVERS 3	115	8.19
524874	OASIS 3	115	9.93	527552	RIAC 2	69	3.00	528095	7-RIVERS 6	230	6.05
524875	OASIS 6	230	7.97	527563	ROSWLL_INT 2	69	3.53	528132	OCOTILLO 3	115	6.08
524885	SN_JUAN_TAP6	230	4.77	527564	ROSWLL_INT 3	115	5.27	528137	N_CANAL 3	115	8.49
524889	SN_JUAN_WND6	230	4.57	527575	SW_4702 2	69	3.21	528160	CARLSBAD 3	115	10.91
524909	ROSEVELT_N 6	230	9.79	527589	CV-ORCHARD 2	69	2.01	528178	PECOS 3	115	11.49
524911	ROSEVELT_S 6	230	9.79	527597	TWEEDY 3	115	4.91	528179	PECOS 6	230	6.42
524915	SW_4K33 6	230	9.79	527711	EAGLE_CREEK3	115	7.25	528226	HOPI_SUB 3	115	6.78
524924	PORTALES 3	115	7.45	527786	ATOKA 3	115	6.99	560007	G08-022-TAP	345	5.81
525549	TOLK 7	345	9.20	527793	EDDY_STH 3	115	10.95	560025	NORTON 6	230	2.80
527482	CHAVES_CNTY3	115	6.27	527798	EDDY_NTH 3	115	10.95	577103	GEN-2008-022	345	5.46
527483	CHAVES_CNTY6	230	4.12	527799	EDDY_NORTH 6	230	7.87	583950	GEN-2014-033	115	6.27
527501	URTON 3	115	5.31	527800	EDDY_SOUTH 6	230	7.87	583960	GEN-2014-034	115	5.83
527508	PRICE 3	115	4.94	527802	EDDY_CNTY 7	345	4.36	583970	GEN-2014-035	115	5.97
527515	CV-PINE 3	115	4.59	527821	CV-DAYTON 3	115	6.89	584260	GEN-2014-047	345	4.63
527522	ROSWELL_CTY3	115	5.04	527828	CV-12MH 3	115	10.47	584280	GEN-2014-046	115	5.35
527528	RIAC_TP 2	69	3.38	527864	CUNNINHAM 3	115	29.60	584620	GEN-2015-020	115	9.67
527534	BRASHER_TP 3	115	5.24	527865	CUNNINHAM 6	230	17.64	599960	EPTNP-D6	230	7.87

Table 4-2
Short Circuit Analysis for Study Project GEN-2014-065

Bus Number	Bus Name	Bus Voltage (kV)	Fault Current 3-LG (kA)	Bus Number	Bus Name	Bus Voltage (kV)	Fault Current 3-LG (kA)
527955	SAGE_BRUSH 3	115	4.31	528533	DRINKARD_TP3	115	7.65
527957	LAGARTO 3	115	4.27	528540	WHITTEN 3	115	5.80
528018	RED_BLUFF 3	115	7.84	528547	S_JAL 3	115	5.22
528025	RDRUNNER 3	115	8.67	528552	OIL_CENTER 3	115	5.65
528027	RDRUNNER 7	345	3.93	528554	COOPER_RNCH3	115	6.11
528040	BATTLE_AXE 3	115	3.42	528561	DOLLARHIDE 3	115	4.10
528230	AGAVE_RHILL3	115	6.01	528564	TOBOSOFLATS3	115	3.18
528232	OCHOA 3	115	5.97	528582	BYRD 3	115	7.59
528239	PNDEROSATP 3	115	5.45	528596	CARDINAL 3	115	7.22
528240	PONDEROSA 3	115	3.93	528603	NA_ENRICH 3	115	9.63
528505	LEA_ROAD 3	115	5.21	528605	TARGA 3	115	7.85
528512	EUNICE 3	115	6.00	584360	ASGI2014-010	115	5.97
528519	WARD 3	115	4.99	584380	ASGI2014-012	115	6.11
528526	TEAGUE 3	115	5.71	584430	GEN-2014-065	115	5.46

Table 4-3
Short Circuit Analysis for Study Project GEN-2014-074

Bus Number	Bus Name	Bus Voltage (kV)	Fault Current 3-LG (kA)	Bus Number	Bus Name	Bus Voltage (kV)	Fault Current 3-LG (kA)	Bus Number	Bus Name	Bus Voltage (kV)	Fault Current 3-LG (kA)
511422	FLETCHR4	138	7.80	525326	COX 3	115	6.1	526934	YOAKUM 3	115	16.62
511423	FLE TAP4	138	8.52	525414	LAMTON 3	115	8.0	526935	YOAKUM 6	230	17.99
511431	LWS S4	138	10.79	525453	HALE_CNTY 2	69	7.0	526936	YOAKUM_345	345	9.44
511436	COMANC-2	69	9.64	525454	HALE_CNTY 3	115	10.4	527010	OXYBRU_TP 6	230	14.16
511437	COMANC-4	138	17.60	525461	NEWHART 6	230	11.0	527041	ARCO_TP 3	115	13.01
511439	LWSTAP 4	138	11.24	525480	PLANT_X 3	115	26.4	527146	MUSTANG 3	115	22.34
511456	O.K.U.-7	345	5.44	525481	PLANT_X 6	230	29.0	527149	MUSTANG 6	230	15.80
511466	L.E.S.-2	69	16.36	525524	TOLK_EAST 6	230	31.2	527151	GS-MUSTANG 6	230	15.80
511467	L.E.S.-4	138	23.55	525531	TOLK_WEST 6	230	31.2	527194	LG-PLSHILL 3	115	7.52
511468	L.E.S.-7	345	12.11	525543	TOLK_TAP 6	230	31.2	527276	SEMINOLE 6	230	7.29
511469	LGORE-N2	69	7.95	525549	TOLK 7	345	9.2	527865	CUNNINHAM 6	230	17.64
511470	LGORE-S2	69	6.90	525731	SP-ABERNTHY2	69	3.0	527891	HOBBS_INT 3	115	32.93
511474	SHERID4	138	11.99	525738	HALECENTER 2	69	2.5	527894	HOBBS_INT 6	230	19.53
511477	S.W.S.-4	138	33.64	525779	FLOYD_CNTY 2	69	5.6	527896	HOBBS_INT 7	345	9.82
511486	ELGINJT4	138	9.91	525780	FLOYD_CNTY 3	115	6.7	527962	POTASH_JCT 3	115	15.47
511487	ELGINJT2	69	8.47	525816	TUCO_INT2 2	69	4.7	527965	KIOWA 7	345	6.03
511488	112GORE4	138	12.32	525826	TUCO_INT 2	69	7.9	528027	RDRUNNER 7	345	3.93
511494	COMMTAP4	138	20.73	525828	TUCO_INT 3	115	20.2	528185	NLOV_PLT 7	345	4.68
511512	RPPAPER4	138	11.63	525830	TUCO_INT 6	230	22.8	528604	ANDREWS 7	345	6.31
511537	ARTVLTP4	138	11.41	525832	TUCO_INT 7	345	13.1	528610	GAINES_GEN 7	345	6.63
511553	CHISHOLM7	345	5.39	525840	ANTELOPE_1 6	230	22.6	528611	GAINESGENTP7	345	7.12
511557	CHISHOLM6	230	8.34	525853	LH-WIL&ELLN2	69	2.6	529304	OMDUNCN4	138	6.56
514801	MINCO 7	345	15.99	525885	SP-NEWDEAL 2	69	3.4	539801	THISTLE7	345	15.98
514809	JOHNCO 7	345	8.80	525926	CROSBY 3	115	5.2	560000	G11-14-TAP	345	14.49
514901	CIMARON7	345	30.07	526076	STANTON_W 3	115	9.3	560013	G14-057T	345	9.09
515135	SUNNYSD4	138	16.51	526109	SP-ERSKINE 3	115	11.6	560016	G14-068-TAP	230	9.41
515136	SUNNYSD7	345	9.71	526146	INDIANA 3	115	9.7	560021	TUCO_2	230	19.23
515375	WWRDEHV7	345	20.46	526159	CARLISLE 2	69	2.6	560022	TUCO_2	345	12.68
515376	WWRDEHV4	138	25.52	526160	CARLISLE 3	115	13.6	560027	G14-074-TAP	345	6.72
515444	MCNOWND7	345	15.95	526161	CARLISLE 6	230	13.9	560034	G15-010-TAP	230	9.34
515458	BORDER 7	345	5.42	526162	LP-DOUD_TP 3	115	11.9	562004	G11-025-TAP	115	5.93
515549	MNCWND37	345	11.10	526192	MURPHY 3	115	10.8	562075	G11-051-TAP	345	16.77
515800	GRACMNT7	345	14.53	526268	LUBBCK_STH 3	115	19.3	562480	G13-027-TAP	230	10.07
515802	GRACMNT4	138	28.05	526269	LUBBCK_STH 6	230	19.2	579351	GEN-2007-062	345	8.60
520814	ANADARK4	138	32.40	526297	LUBBCK_EST 2	69	8.1	582019	GEN-2011-019	345	20.46
521089	WASHITA4	138	27.66	526298	LUBBCK_EST 3	115	15.6	582020	GEN-2011-020	345	20.46
521157	HUGO 7	345	10.72	526299	LUBBCK_EST 6	230	13.6	583090	G1149&G1504	345	4.92
522823	LP-MILWAKEE6	230	13.45	526337	JONES 6	230	21.2	583340	GEN-2012-020	230	9.18
522828	LP-MILWAKEE2	69	8.41	526435	SUNDOWN 6	230	11.3	583840	GEN-2013-027	230	9.00
522861	LP-SOUTHEST6	230	17.29	526460	AMOCO_SS 6	230	9.9	584030	G14053&14054	230	8.33
522866	LP-COOK 2	69	35.14	526524	WOLFFORTH 3	115	11.7	584070	GEN-2014-057	345	6.15
522870	LP-HOLLY 6	230	17.05	526525	WOLFFORTH 6	230	13.9	584440	GEN-2014-074	345	6.32
522888	LP-WADSWRTH6	230	12.67	526676	GRASSLAND 3	115	6.2	584530	GEN-2015-009	230	6.24
524415	AMA_SOUTH 6	230	13.60	526677	GRASSLAND 6	230	6.6	584540	GEN-2015-010	230	5.02
524911	ROSEVELT_S 6	230	9.79	526679	CIRRUS_WND 6	230	5.1	590001	OKLEHV24	138	4.79
525192	KRESS_INT 3	115	11.23	526784	AMOCOWASSON6	230	14.0	590003	OKLEHV14	138	4.80
525212	SWISHER 3	115	10.35	526792	PRENTICE 3	115	5.9	599891	OKLAUN 7	345	4.04
525213	SWISHER 6	230	10.33	526928	LE-PLNSINT 3	115	9.5				

Table 4-4
Short Circuit Analysis for Study Project GEN-2015-009

Bus Number	Bus Name	Bus Voltage (kV)	Fault Current 3-LG (kA)	Bus Number	Bus Name	Bus Voltage (kV)	Fault Current 3-LG (kA)	Bus Number	Bus Name	Bus Voltage (kV)	Fault Current 3-LG (kA)
511456	O.K.U.-7	345	5.44	527276	SEMINOLE 6	230	7.29	528317	ENRON_TP 3	115	6.83
515458	BORDER 7	345	5.42	527284	RUSSELL 3	115	9.08	528318	ENRON 3	115	5.93
524770	PLSNT_HILL 6	230	6.51	527286	XTO_RUSSEL 3	115	10.03	528325	LE-WAITS 3	115	6.69
524885	SN_JUAN_TAP6	230	4.77	527300	AM_FRAC 3	115	9.44	528334	LE-LOVINTON3	115	8.55
524908	ROOSEVELT 3	115	10.78	527322	GAINES 3	115	8.56	528337	WILDCAT_WND	115	8.55
524909	ROSEVELT_N 6	230	9.79	527323	OXY_WSTSEM 3	115	6.43	528341	LE-SANANDRS3	115	6.44
524911	ROSEVELT_S 6	230	9.79	527325	OXY_WSEM_TP3	115	8.48	528348	BUCKEYE_TP 3	115	8.37
524915	SW_4K33 6	230	9.79	527340	DOSS 3	115	7.16	528355	MADDOX 3	115	27.57
525461	NEWHART 6	230	10.98	527360	MAPCO 3	115	10.35	528385	BUCKEYE 3	115	7.52
525480	PLANT_X 3	115	26.38	527362	JOHNSON_DRW3	115	10.58	528392	PEARLE 3	115	6.37
525481	PLANT_X 6	230	29.00	527363	HIGG 3	115	10.21	528394	QUAHADA 3	115	8.14
525524	TOLK_EAST 6	230	31.18	527482	CHAVES_CNTY3	115	6.27	528399	LEA_NATIONL3	115	6.87
525531	TOLK_WEST 6	230	31.18	527483	CHAVES_CNTY6	230	4.12	528406	MALJMAR1&2 3	115	3.23
525543	TOLK_TAP 6	230	31.18	527564	ROSWLL_INT 3	115	5.27	528413	TAYLOR 3	115	14.57
525549	TOLK 7	345	9.20	527597	TWEEDY 3	115	4.91	528420	ZIA 3	115	6.58
525636	LAMB_CNTY 3	115	9.80	527707	ARTESIA 3	115	6.68	528435	MILLEN 3	115	11.66
525637	LAMB_CNTY 6	230	5.68	527710	EAGLE_CREEK2	69	2.31	528442	NE_HOBBS 3	115	11.95
525828	TUCO_INT 3	115	20.18	527711	EAGLE_CREEK3	115	7.25	528449	W_BENDER 3	115	14.96
525830	TUCO_INT 6	230	22.80	527715	NAVAJO_2TP 3	115	6.92	528463	SANGER_SW 3	115	16.17
525832	TUCO_INT 7	345	13.06	527736	NAVAJO_5TP 3	115	6.88	528470	E_SANGER 3	115	12.72
525840	ANTELOPE_1 6	230	22.62	527786	ATOKA 3	115	6.99	528480	OXY_S_HOBBS3	115	11.06
526036	LC-OPDYKE 3	115	5.88	527793	EDDY_STH 3	115	10.95	528484	SW_4J44 3	115	11.24
526161	CARLISLE 6	230	13.91	527798	EDDY_NTH 3	115	10.95	528491	MONUMENT 3	115	15.64
526269	LUBBCK_STH 6	230	19.24	527799	EDDY_NORTH 6	230	7.87	528498	W_HOBBS 3	115	11.80
526337	JONES 6	230	21.24	527800	EDDY_SOUTH 6	230	7.87	528533	DRINKARD_TP3	115	7.65
526352	LEHMAN 3	115	6.03	527802	EDDY_CNTY 7	345	4.36	528554	COOPER_RNCH3	115	6.11
526424	PACIFIC 3	115	9.50	527821	CV-DAYTON 3	115	6.89	528568	MONUMNT_TP 3	115	10.00
526434	SUNDOWN 3	115	11.15	527828	CV-12MH 3	115	10.47	528575	OXYPERMIAN 3	115	15.50
526435	SUNDOWN 6	230	11.26	527864	CUNNINHAM 3	115	29.60	528582	BYRD 3	115	7.59
526445	AMOCO_TP 3	115	10.41	527865	CUNNINHAM 6	230	17.64	528602	ANDREWS 3	115	9.81
526460	AMOCO_SS 6	230	9.85	527891	HOBBS_INT 3	115	32.93	528603	NA_ENRICH 3	115	9.63
526491	LG-CLAUENE 3	115	7.92	527894	HOBBS_INT 6	230	19.53	528604	ANDREWS 7	345	6.31
526524	WOLFFORTH 3	115	11.68	527896	HOBBS_INT 7	345	9.82	528610	GAINES_GEN 7	345	6.63
526525	WOLFFORTH 6	230	13.86	527929	PCA 2	69	6.20	528611	GAINESGENTP7	345	7.12
526735	TERRY_CNTY 2	69	6.92	527930	PCA 3	115	11.35	528617	LE-WAITS 2	69	3.28
526736	TERRY_CNTY 3	115	10.26	527961	POTASH_JCT 2	69	8.62	528618	LE-LOVINTON2	69	6.86
526784	AMOCOWASSON6	230	14.02	527962	POTASH_JCT 3	115	15.47	528622	LE-SANANDRS2	69	5.24
526792	PRENTICE 3	115	5.88	527963	POTASH_JCT 6	230	7.01	528626	LE-PLNSINT 2	69	3.60
526928	LE-PLNSINT 3	115	9.54	527965	KIOWA 7	345	6.03	528630	LE-BUCKEYE 2	69	3.76
526934	YOAKUM 3	115	16.62	527980	DUVAL_#1 2	69	5.70	528638	LE-SAUNDRTP2	69	3.55
526935	YOAKUM 6	230	17.99	527996	KERMAC 2	69	2.94	528650	LE-SAUNDERS2	69	1.97
526936	YOAKUM_345	345	9.44	527999	INTREPDW_TP3	115	12.78	528667	LE-MHOON 2	69	4.37
526944	LG-PLAINS 3	115	7.76	528000	INTREPIDWST3	115	10.90	528671	LE-S_LOVITN2	69	3.52
527010	OXYBRU_TP 6	230	14.16	528018	RED_BLUFF 3	115	7.84	528675	LE-FAMARISS2	69	3.25
527018	BENNETT 3	115	13.10	528022	MISSCHEM#2 2	69	6.63	528679	LE-REED 2	69	4.51
527024	ALLRED_SUB 3	115	7.81	528025	RDRUNNER 3	115	8.67	528683	LE-MCDONALD2	69	2.47
527030	ALRDCRTZ_TP3	115	8.58	528027	RDRUNNER 7	345	3.93	528699	LE-GRAY 2	69	3.99
527036	SHELL_C2 3	115	12.77	528035	IMC_#1_TP 3	115	9.03	528703	LE-DENTN_TP2	69	3.72
527041	ARCO_TP 3	115	13.01	528040	BATTLE_AXE 3	115	3.42	528707	LE-DENTON 2	69	3.78
527046	ARCO_WILRD 3	115	10.44	528070	CV-AZMESA 3	115	7.35	528714	LE-FORT_SW 2	69	3.08
527047	OXY_WILRD 3	115	10.46	528093	7-RIVERS 2	69	2.39	528740	LE-PLANS_TP2	69	2.76
527051	ODC_TP 3	115	13.12	528094	7-RIVERS 3	115	8.19	528759	LE-TP51 2	69	2.49
527062	SHELL_CO2 3	115	15.81	528095	7-RIVERS 6	230	6.05	528774	LE-ERF 2	69	4.76
527068	SHELLC3_TP 3	115	10.52	528109	CV-LAKEWOOD3	115	6.34	528775	LE-ERF 3	115	10.58
527080	EL_PASO 3	115	15.58	528132	OCOTILLO 3	115	6.08	528792	LE-TEXACO 3	115	7.26
527105	SAN_ANDS_TP3	115	16.42	528137	N_CANAL 3	115	8.49	560007	G08-022-TAP	345	5.81
527125	DENVER_CTY 2	69	8.62	528145	NATPOT_TP 2	69	8.58	560016	G14-068-TAP	230	9.41
527130	DENVER_N 3	115	20.74	528151	FIESTA 3	115	9.51	560021	TUCO_2	230	19.23
527136	DENVER_S 3	115	20.74	528159	CARLSBAD 2	69	4.40	560022	TUCO_2	345	12.68
527146	MUSTANG 3	115	22.34	528160	CARLSBAD 3	115	10.91	560027	G14-074-TAP	345	6.72
527149	MUSTANG 6	230	15.80	528178	PECOS 3	115	11.49	560364	AS10-021-TAP	69	2.64
527151	GS-MUSTANG 6	230	15.80	528179	PECOS 6	230	6.42	562480	G13-027-TAP	230	10.07
527194	LG-PLSHILL 3	115	7.52	528182	NORTH_LOVNG3	115	8.57	583340	GEN-2012-020	230	9.18
527201	SEAGRAVES 2	69	5.40	528185	NLOV_PLT 7	345	4.68	583840	GEN-2013-027	230	9.00
527202	SEAGRAVES 3	115	8.52	528192	SOUTH_LOVNG3	115	6.58	584440	GEN-2014-074	345	6.32
527238	ROZ 3	115	9.29	528222	CHINA_DRAW 3	115	7.53	584530	GEN-2015-009	230	6.24
527242	AMERADA 3	115	9.40	528223	CHINA_DRAW 7	345	3.79	599960	EPTNP-D6	230	7.87
527262	SULPHUR 3	115	5.65	528226	HOPI_SUB 3	115	6.78				
527275	SEMINOLE 3	115	11.46	528230	AGAVE_RHILL3	115	6.01				

Table 4-5
Short Circuit Analysis for Study Project GEN-2015-010

Bus Number	Bus Name	Bus Voltage (kV)	Fault Current 3-LG (kA)	Bus Number	Bus Name	Bus Voltage (kV)	Fault Current 3-LG (kA)	Bus Number	Bus Name	Bus Voltage (kV)	Fault Current 3-LG (kA)
511456	O.K.U.-7	345	5.44	525019	EMU&VLY_TP 3	115	6.54	526268	LUBBCK_STH 3	115	19.26
515458	BORDER 7	345	5.42	525028	BAILEYCO 3	115	6.50	526269	LUBBCK_STH 6	230	19.24
522823	LP-MILWAKEE6	230	13.45	525056	BC-EARTH 3	115	8.85	526297	LUBBCK_EST 2	69	8.09
522828	LP-MILWAKEE2	69	8.41	525124	HART_INDUST3	115	7.61	526298	LUBBCK_EST 3	115	15.56
522861	LP-SOUTHEST6	230	17.29	525192	KRESS_INT 3	115	11.23	526299	LUBBCK_EST 6	230	13.58
522866	LP-COOK 2	69	35.14	525212	SWISHER 3	115	10.35	526337	JONES 6	230	21.24
522870	LP-HOLLY 6	230	17.05	525213	SWISHER 6	230	10.33	526424	PACIFIC 3	115	9.50
522888	LP-WADSWRTH6	230	12.67	525326	COX 3	115	6.05	526434	SUNDOWN 3	115	11.15
523309	MOORE_CNTY 6	230	6.72	525414	LAMTON 3	115	7.96	526435	SUNDOWN 6	230	11.26
523869	CHAN/TASCOS6	230	3.84	525440	LC-S_OLTON 3	115	7.66	526445	AMOCO_TP 3	115	10.41
523959	POTTER_CO 6	230	21.91	525453	HALE_CNTY 2	69	6.97	526460	AMOCO_SS 6	230	9.85
523961	POTTER_CO 7	345	9.83	525454	HALE_CNTY 3	115	10.36	526524	WOLFFORTH 3	115	11.68
523979	HARRNG_EST 6	230	27.03	525460	NEWHART 3	115	15.05	526525	WOLFFORTH 6	230	13.86
524010	ROLLHILLS 6	230	20.16	525461	NEWHART 6	230	10.98	526676	GRASSLAND 3	115	6.18
524267	BUSHLAND 6	230	10.16	525480	PLANT_X 3	115	26.38	526677	GRASSLAND 6	230	6.55
524296	SPNSPUR_WND7	345	5.38	525481	PLANT_X 6	230	29.00	526679	CIRRUS_WND 6	230	5.08
524415	AMA_SOUTH 6	230	13.60	525524	TOLK_EAST 6	230	31.18	526935	YOAKUM 6	230	17.99
524502	NORTON 3	115	4.56	525531	TOLK_WEST 6	230	31.18	526936	YOAKUM_345	345	9.44
524622	DEAFSMITH 3	115	12.74	525543	TOLK_TAP 6	230	31.18	527483	CHAVES_CNTY6	230	4.12
524623	DEAFSMITH 6	230	9.42	525549	TOLK 7	345	9.20	527802	EDDY_CNTY 7	345	4.36
524669	DS-#20 3	115	4.88	525614	W_LITLFLDTP3	115	8.31	527896	HOBBS_INT 7	345	9.82
524746	CASTRO_CNTY3	115	10.02	525615	W_LITTLFLD 3	115	7.76	560007	G08-022-TAP	345	5.81
524764	NORRIS_TP 3	115	10.91	525636	LAMB_CNTY 3	115	9.80	560011	G14-038-TAP	345	10.78
524768	PLSNT_HILL 3	115	9.79	525637	LAMB_CNTY 6	230	5.68	560016	G14-068-TAP	230	9.41
524770	PLSNT_HILL 6	230	6.51	525731	SP-ABERNTHY2	69	3.02	560021	TUCO_2	230	19.23
524773	E_CLOVIS 3	115	8.87	525738	HALECENTER 2	69	2.46	560022	TUCO_2	345	12.68
524776	N_CLOVIS_TP3	115	6.63	525779	FLOYD_CNTY 2	69	5.57	560025	NORTON 6	230	2.80
524797	PERIMETER 3	115	6.38	525780	FLOYD_CNTY 3	115	6.66	560027	G14-074-TAP	345	6.72
524821	CURRY 2	69	4.38	525816	TUCO_INT2 2	69	4.68	560032	G15-018T	115	5.97
524822	CURRY 3	115	10.93	525826	TUCO_INT 2	69	7.93	560034	G15-010-TAP	230	9.34
524831	FE-HOLLAND 3	115	8.74	525828	TUCO_INT 3	115	20.18	562004	G11-025-TAP	115	5.93
524838	FE-CLOVIS2 3	115	10.31	525830	TUCO_INT 6	230	22.80	562480	G13-027-TAP	230	10.07
524863	FE-CHZPLT 3	115	7.89	525832	TUCO_INT 7	345	13.06	577103	GEN-2008-022	345	5.46
524874	OASIS 3	115	9.93	525840	ANTELOPE_1 6	230	22.62	583340	GEN-2012-020	230	9.18
524875	OASIS 6	230	7.97	525853	LH-WIL&ELLN2	69	2.59	583840	GEN-2013-027	230	9.00
524885	SN_JUAN_TAP6	230	4.77	525885	SP-NEWDEAL 2	69	3.39	584030	G14053&14054	230	8.33
524889	SN_JUAN_WND6	230	4.57	525926	CROSBY 3	115	5.19	584150	GEN-2014-068	230	8.69
524908	ROOSEVELT 3	115	10.78	526036	LC-OPDYKE 3	115	5.88	584260	GEN-2014-047	345	4.63
524909	ROSEVELT_N 6	230	9.79	526076	STANTON_W 3	115	9.33	584440	GEN-2014-074	345	6.32
524911	ROSEVELT_S 6	230	9.79	526109	SP-ERSKINE 3	115	11.58	584540	GEN-2015-010	230	5.02
524915	SW_4K33 6	230	9.79	526146	INDIANA 3	115	9.75	584620	GEN-2015-020	115	9.67
524923	PORTALES 2	69	7.25	526159	CARLISLE 2	69	2.57	599950	LAMAR7	345	2.50
524924	PORTALES 3	115	7.45	526160	CARLISLE 3	115	13.57	599955	PNM-DC6	230	9.79
524935	KILGORE 3	115	6.08	526161	CARLISLE 6	230	13.91	599960	EPTNP-D6	230	7.87
524977	MARKET_ST 3	115	5.63	526162	LP-DOUD_TP 3	115	11.92				
525018	EMULESH&VLY3	115	5.95	526192	MURPHY 3	115	10.83				

Table 4-6
Short Circuit Analysis for Study Project GEN-2015-014

Bus Number	Bus Name	Bus Voltage (kV)	Fault Current 3-LG (kA)	Bus Number	Bus Name	Bus Voltage (kV)	Fault Current 3-LG (kA)
525481	PLANT_X 6	230	29.00	526435	SUNDOWN 6	230	11.26
525958	MORTON 2	69	1.65	526445	AMOCO_TP 3	115	10.41
525965	LC-WHTEFACE2	69	2.37	526452	AMOCO_CRYO 3	115	6.45
525972	WHITEFACE 2	69	3.41	526460	AMOCO_SS 6	230	9.85
526020	HOCKLEY 3	115	5.61	526484	LG-LEVELAND3	115	9.32
526030	LC-PETTIT 2	69	1.89	526525	WOLFFORTH 6	230	13.86
526036	LC-OPDYKE 3	115	5.88	526792	PRENTICE 3	115	5.88
526042	COBLE 2	69	2.28	526928	LE-PLNSINT 3	115	9.54
526352	LEHMAN 3	115	6.03	526934	YOAKUM 3	115	16.62
526360	COCHRAN 2	69	5.82	526935	YOAKUM 6	230	17.99
526361	COCHRAN 3	115	6.90	526944	LG-PLAINS 3	115	7.76
526372	LG-SUNDOWN 2	69	2.37	527041	ARCO_TP 3	115	13.01
526379	MIDDLETON 2	69	3.54	527194	LG-PLSHILL 3	115	7.52
526386	MALLET 2	69	2.98	528626	LE-PLNSINT 2	69	3.60
526395	TEXACO 2	69	2.60	528740	LE-PLANS_TP2	69	2.76
526424	PACIFIC 3	115	9.50	560030	LEHMAN 3	115	6.45
526434	SUNDOWN 3	115	11.15	584560	GEN-2015-014	115	5.06

Table 4-7
Short Circuit Analysis for Study Project GEN-2015-018

Bus Number	Bus Name	Bus Voltage (kV)	Fault Current 3-LG (kA)	Bus Number	Bus Name	Bus Voltage (kV)	Fault Current 3-LG (kA)	Bus Number	Bus Name	Bus Voltage (kV)	Fault Current 3-LG (kA)
524486	CAPROCK 3	115	3.85	524909	ROSEVELT_N 6	230	9.79	525440	LC-S_OLTON 3	115	7.66
524502	NORTON 3	115	4.56	524911	ROSEVELT_S 6	230	9.79	525453	HALE_CNTY 2	69	6.97
524509	FE-TUCMCARI3	115	3.16	524915	SW_4K33 6	230	9.79	525454	HALE_CNTY 3	115	10.36
524648	CARGILL 3	115	3.95	524923	PORTALES 2	69	7.25	525461	NEWHART 6	230	10.98
524662	PARMER_CO 3	115	4.15	524924	PORTALES 3	115	7.45	525480	PLANT_X 3	115	26.38
524664	DS-#24 3	115	4.09	524929	RO-PORT_MTR2	69	7.25	525481	PLANT_X 6	230	29.00
524669	DS-#20 3	115	4.88	524934	ZODIAC 2	69	5.37	525524	TOLK_EAST 6	230	31.18
524746	CASTRO_CNTY3	115	10.02	524935	KILGORE 3	115	6.08	525531	TOLK_WEST 6	230	31.18
524764	NORRIS_TP 3	115	10.91	524941	PORTALES#1 2	69	5.57	525543	TOLK_TAP 6	230	31.18
524768	PLSNT_HILL 3	115	9.79	524963	S_PORTALES 3	115	5.71	525594	SUDANRURAL 3	115	4.82
524770	PLSNT_HILL 6	230	6.51	524977	MARKET_ST 3	115	5.63	525607	NEW_AMHERST2	69	3.23
524773	E_CLOVIS 3	115	8.87	524987	LARIAT 2	69	2.23	525608	NEW_AMHERST3	115	5.36
524776	N_CLOVIS_TP3	115	6.63	524996	BC-PROGRESS2	69	2.91	525614	W_LITLFLDTP3	115	8.31
524777	N_CLOVIS 3	115	6.05	525001	W_MULESHOE 2	69	4.27	525615	W_LITTLFLD 3	115	7.76
524783	W_CLOVIS 2	69	2.43	525008	MULESH_CTY 2	69	4.46	525636	LAMB_CNTY 3	115	9.80
524797	PERIMETER 3	115	6.38	525017	EMULESH&VLY2	69	4.47	525637	LAMB_CNTY 6	230	5.68
524801	NORRIS 3	115	9.99	525018	EMULESH&VLY3	115	5.95	525828	TUCO_INT 3	115	20.18
524808	FE-CLVS_INT3	115	6.30	525019	EMU&VLY_TP 3	115	6.54	526435	SUNDOWN 6	230	11.26
524821	CURRY 2	69	4.38	525023	BC-BAIL_MTR2	69	5.61	560016	G14-068-TAP	230	9.41
524822	CURRY 3	115	10.93	525027	BAILEYCO 2	69	5.61	560025	NORTON 6	230	2.80
524831	FE-HOLLAND 3	115	8.74	525028	BAILEYCO 3	115	6.50	560032	G15-018T	115	5.97
524838	FE-CLOVIS2 3	115	10.31	525038	BAILEY_PMP 2	69	2.92	560034	G15-010-TAP	230	9.34
524846	FARWELL 2	69	2.09	525040	BAILEY_PMP 3	115	4.95	562480	G13-027-TAP	230	10.07
524853	DS-#10 2	69	1.79	525045	LC-BECK 2	69	2.06	584600	GEN-2015-018	115	4.42
524863	FE-CHZPLT 3	115	7.89	525056	BC-EARTH 3	115	8.85	584620	GEN-2015-020	115	9.67
524874	OASIS 3	115	9.93	525192	KRESS_INT 3	115	11.23	599955	PNM-DC6	230	9.79
524875	OASIS 6	230	7.97	525326	COX 3	115	6.05				
524908	ROOSEVELT 3	115	10.78	525414	LAMTON 3	115	7.96				

Table 4-8
Short Circuit Analysis for Study Project GEN-2015-020

Bus Number	Bus Name	Bus Voltage (kV)	Fault Current 3-LG (kA)	Bus Number	Bus Name	Bus Voltage (kV)	Fault Current 3-LG (kA)	Bus Number	Bus Name	Bus Voltage (kV)	Fault Current 3-LG (kA)
524486	CAPROCK 3	115	3.85	524874	OASIS 3	115	9.93	525637	LAMB_CNTY 6	230	5.68
524502	NORTON 3	115	4.56	524875	OASIS 6	230	7.97	527482	CHAVES_CNTY3	115	6.27
524509	FE-TUCMCARI3	115	3.16	524885	SN_JUAN_TAP6	230	4.77	527483	CHAVES_CNTY6	230	4.12
524662	PARMER_CO 3	115	4.15	524889	SN_JUAN_WND6	230	4.57	527501	URTON 3	115	5.31
524669	DS-#20 3	115	4.88	524908	ROOSEVELT 3	115	10.78	527508	PRICE 3	115	4.94
524764	NORRIS_TP 3	115	10.91	524909	ROSEVELT_N 6	230	9.79	527546	SAMSON 3	115	5.05
524768	PLSNT_HILL 3	115	9.79	524911	ROSEVELT_S 6	230	9.79	527793	EDDY_STH 3	115	10.95
524770	PLSNT_HILL 6	230	6.51	524915	SW_4K33 6	230	9.79	527799	EDDY_NORTH 6	230	7.87
524773	E_CLOVIS 3	115	8.87	524923	PORTALES 2	69	7.25	527800	EDDY_SOUTH 6	230	7.87
524776	N_CLOVIS_TP3	115	6.63	524924	PORTALES 3	115	7.45	527802	EDDY_CNTY 7	345	4.36
524777	N_CLOVIS 3	115	6.05	524929	RO-PORT_MTR2	69	7.25	560025	NORTON 6	230	2.80
524783	W_CLOVIS 2	69	2.43	524934	ZODIAC 2	69	5.37	560032	G15-018T	115	5.97
524784	W_CLOVIS 3	115	5.88	524935	KILGORE 3	115	6.08	560034	G15-010-TAP	230	9.34
524790	CANNON_TP 3	115	5.71	524941	PORTALES#1 2	69	5.57	562480	G13-027-TAP	230	10.07
524794	CANNONAFB 3	115	5.38	524948	PORTALES#2 2	69	4.73	583280	ASGI2012-002	115	1.05
524797	PERIMETER 3	115	6.38	524962	S_PORTALES 2	69	4.21	583950	GEN-2014-033	115	6.27
524801	NORRIS 3	115	9.99	524963	S_PORTALES 3	115	5.71	583970	GEN-2014-035	115	5.97
524808	FE-CLVS_INT3	115	6.30	524976	MARKET_ST 2	69	3.99	584280	GEN-2014-046	115	5.35
524821	CURRY 2	69	4.38	524977	MARKET_ST 3	115	5.63	584540	GEN-2015-010	230	5.02
524822	CURRY 3	115	10.93	525028	BAILEYCO 3	115	6.50	584600	GEN-2015-018	115	4.42
524831	FE-HOLLAND 3	115	8.74	525481	PLANT_X 6	230	29.00	584620	GEN-2015-020	115	9.67
524838	FE-CLOVIS2 3	115	10.31	525524	TOLK_EAST 6	230	31.18	599955	PNM-DC6	230	9.79
524846	FARWELL 2	69	2.09	525531	TOLK_WEST 6	230	31.18	599960	EPTNP-D6	230	7.87
524863	FE-CHZPLT 3	115	7.89	525543	TOLK_TAP 6	230	31.18				

Table 4-9
Short Circuit Analysis for Study Project GEN-2015-022

Bus Number	Bus Name	Bus Voltage (kV)	Fault Current 3-LG (kA)	Bus Number	Bus Name	Bus Voltage (kV)	Fault Current 3-LG (kA)	Bus Number	Bus Name	Bus Voltage (kV)	Fault Current 3-LG (kA)
515375	WWRDEHV7	345	20.46	524544	SPRING_DRW 3	115	6.39	525524	TOLK_EAST 6	230	31.18
515458	BORDER 7	345	5.42	524622	DEAFSMITH 3	115	12.74	525531	TOLK_WEST 6	230	31.18
522800	MU-TULIA 3	115	5.10	524623	DEAFSMITH 6	230	9.42	525543	TOLK_TAP 6	230	31.18
522823	LP-MILWAKEE6	230	13.45	524694	DS-#22 3	115	4.64	525549	TOLK 7	345	9.20
522870	LP-HOLLY 6	230	17.05	524714	CASTRO_TP 2	69	3.55	525614	W_LITLFLDTP3	115	8.31
523095	HITCHLAND 6	230	15.23	524721	DS-#15&#19 2	69	3.57	525615	W_LITTLFLD 3	115	7.76
523221	XIT_INTG 6	230	2.60	524728	DS-CASTRO 2	69	4.30	525636	LAMB_CNTY 3	115	9.80
523267	PRINGLE 6	230	4.50	524734	DS-#21 3	115	9.49	525637	LAMB_CNTY 6	230	5.68
523308	MOORE_E 3	115	10.73	524745	CASTRO_CNTY2	69	8.89	525731	SP-ABERNTHY2	69	3.02
523309	MOORE_CNTY 6	230	6.72	524746	CASTRO_CNTY3	115	10.02	525738	HALECENTER 2	69	2.46
523339	FAIN 3	115	5.27	524909	ROSEVELT_N 6	230	9.79	525745	LH-HALECTR 2	69	2.44
523410	CRMWA_#4 3	115	9.74	525018	EMULESH&VLY3	115	5.95	525779	FLOYD_CNTY 2	69	5.57
523544	HUTCH_N 3	115	15.62	525019	EMU&VLY_TP 3	115	6.54	525780	FLOYD_CNTY 3	115	6.66
523546	HUTCH_S 3	115	15.62	525028	BAILEYCO 3	115	6.50	525816	TUCO_INT2 2	69	4.68
523551	HUTCHISON 6	230	7.23	525056	BC-EARTH 3	115	8.85	525826	TUCO_INT 2	69	7.93
523770	GRAPEVINE 3	115	8.27	525124	HART_INDUST3	115	7.61	525828	TUCO_INT 3	115	20.18
523771	GRAPEVINE 6	230	5.72	525132	LC-N_OLTON 2	69	3.11	525830	TUCO_INT 6	230	22.80
523777	WHEELER 6	230	5.82	525143	HAPPY_CTYTP2	69	3.25	525832	TUCO_INT 7	345	13.06
523817	MIDSTRM_TP 3	115	6.72	525153	HAPPY_INT 2	69	3.53	525840	ANTELOPE_1 6	230	22.62
523869	CHAN/TASCOS6	230	3.84	525154	HAPPY_INT 3	115	5.36	525853	LH-WIL&ELLN2	69	2.59
523959	POTTER_CO 6	230	21.91	525179	TULIA_TP 3	115	6.31	525885	SP-NEWDEAL 2	69	3.39
523961	POTTER_CO 7	345	9.83	525191	KRESS_INT 2	69	4.44	525926	CROSBY 3	115	5.19
523977	HARRNG_WST 6	230	27.03	525192	KRESS_INT 3	115	11.23	526076	STANTON_W 3	115	9.33
523978	HARRNG_MID 6	230	27.03	525203	SW-KRESS 2	69	4.44	526146	INDIANA 3	115	9.75
523979	HARRNG_EST 6	230	27.03	525212	SWISHER 3	115	10.35	526160	CARLISLE 3	115	13.57
524007	ROLLHILLS 3	115	19.56	525213	SWISHER 6	230	10.33	526161	CARLISLE 6	230	13.91
524010	ROLLHILLS 6	230	20.16	525224	KRESS_RURL 2	69	2.51	526268	LUBBCK_STH 3	115	19.26
524016	ASARCO 3	115	26.71	525225	KRESS_RURAL3	115	6.29	526269	LUBBCK_STH 6	230	19.24
524018	ASARCO_TP 3	115	28.89	525249	LH-PLW&FNY 2	69	1.60	526297	LUBBCK_EST 2	69	8.09
524043	NICHOLS 3	115	30.92	525256	SW_9848 2	69	3.10	526298	LUBBCK_EST 3	115	15.56
524044	NICHOLS 6	230	26.19	525257	N_PLAINVEW 3	115	5.15	526299	LUBBCK_EST 6	230	13.58
524058	WHITAKER 3	115	22.11	525271	KISER 2	69	3.49	526337	JONES 6	230	21.24
524079	CONWAY 3	115	5.03	525272	KISER 3	115	5.17	526434	SUNDOWN 3	115	11.15
524163	EAST_PLANT 6	230	13.92	525284	WESTRIDGE 2	69	4.29	526435	SUNDOWN 6	230	11.26
524224	MANHATTAN 3	115	18.58	525291	PLAINVW_TP 2	69	6.54	526460	AMOCO_SS 6	230	9.85
524266	BUSHLAND 3	115	9.47	525298	S_PLAINVEW 2	69	2.59	526525	WOLFFORTH 6	230	13.86
524267	BUSHLAND 6	230	10.16	525307	E_PLAINVEW 2	69	2.46	526677	GRASSLAND 6	230	6.55
524290	WILDOR2_JUS6	230	6.83	525316	LH-PROVDNCE2	69	3.39	526936	YOAKUM_345	345	9.44
524296	SPNSPUR_WND7	345	5.38	525325	COX 2	69	3.39	560011	G14-038-TAP	345	10.78
524322	GEORGIA 3	115	16.54	525326	COX 3	115	6.05	560016	G14-068-TAP	230	9.41
524338	SOUTHEAST 3	115	11.06	525339	AIKEN_RURL 2	69	2.46	560021	TUCO_2	230	19.23
524345	OSAGE 3	115	13.85	525404	LC-OLTON 2	69	4.55	560022	TUCO_2	345	12.68
524364	RANDALL 3	115	21.12	525413	LAMTON 2	69	5.26	560027	G14-074-TAP	345	6.72
524365	RANDALL 6	230	14.47	525414	LAMTON 3	115	7.96	560034	G15-010-TAP	230	9.34
524377	FARMERS 3	115	15.22	525425	CORNER 2	69	3.65	562004	G11-025-TAP	115	5.93
524388	CROUSE_HIND3	115	15.23	525432	SP-HALFWAY 2	69	5.91	562480	G13-027-TAP	230	10.07
524397	ARROWHEAD 3	115	13.68	525440	LC-S_OLTON 3	115	7.66	583090	G1149&G1504	345	4.92
524404	OWENSCORN 3	115	14.93	525453	HALE_CNTY 2	69	6.97	583340	GEN-2012-020	230	9.18
524414	AMA_SOUTH 3	115	16.76	525454	HALE_CNTY 3	115	10.36	584030	G14053&14054	230	8.33
524415	AMA_SOUTH 6	230	13.60	525460	NEWHART 3	115	15.05	584150	GEN-2014-068	230	8.69
524425	ESTACADO_TP3	115	13.32	525461	NEWHART 6	230	10.98	584220	GEN-2014-040	115	8.31
524522	CANYON E_TP3	115	5.15	525480	PLANT_X 3	115	26.38	584640	GEN-2015-022	115	10.35
524530	PALO_DURO 3	115	6.56	525481	PLANT_X 6	230	29.00				

Table 4-10
Short Circuit Analysis for Study Project ASGI-2015-002

Bus Number	Bus Name	Bus Voltage (kV)	Fault Current 3-LG (kA)	Bus Number	Bus Name	Bus Voltage (kV)	Fault Current 3-LG (kA)	Bus Number	Bus Name	Bus Voltage (kV)	Fault Current 3-LG (kA)
522823	LP-MILWAKEE6	230	13.45	526435	SUNDOWN 6	230	11.26	526934	YOAKUM 3	115	16.62
522861	LP-SOUTHEST6	230	17.29	526460	AMOCO_SS 6	230	9.85	527080	EL_PASO 3	115	15.58
525481	PLANT_X 6	230	29.00	526469	SP-YUMA 2	69	3.07	527125	DENVER_CTY 2	69	8.62
525830	TUCO_INT 6	230	22.80	526475	YUMA_INT 3	115	11.20	527130	DENVER_N 3	115	20.74
526109	SP-ERSKINE 3	115	11.58	526481	SP-WOLF_TP 3	115	11.39	527136	DENVER_S 3	115	20.74
526159	CARLISLE 2	69	2.57	526483	SP-WOLFORTH3	115	8.80	527146	MUSTANG 3	115	22.34
526160	CARLISLE 3	115	13.57	526484	LG-LEVELAND3	115	9.32	527202	SEAGRAVES 3	115	8.52
526161	CARLISLE 6	230	13.91	526491	LG-CLAUENE 3	115	7.92	527212	DIAMONDBACK3	115	3.04
526162	LP-DOUD_TP 3	115	11.92	526506	LG-DOCWEBR 2	69	4.92	527261	SULPHUR 2	69	3.36
526176	LP-DOUD 3	115	9.22	526524	WOLFFORTH 3	115	11.68	527262	SULPHUR 3	115	5.65
526192	MURPHY 3	115	10.83	526525	WOLFFORTH 6	230	13.86	527286	XTO_RUSSEL 3	115	10.03
526268	LUBBCK_STH 3	115	19.26	526735	TERRY_CNTY 2	69	6.92	583810	ASGI2013-006	115	8.80
526269	LUBBCK_STH 6	230	19.24	526736	TERRY_CNTY 3	115	10.26	584030	G14053&14054	230	8.33
526337	JONES 6	230	21.24	526747	LG-BROWNFLD2	69	3.55	584720	ASGI2015-002	69	2.15
526434	SUNDOWN 3	115	11.15	526792	PRENTICE 3	115	5.88				

Table 4-11
Short Circuit Analysis for Study Project ASGI-2015-003

Bus Number	Bus Name	Bus Voltage (kV)	Fault Current 3-LG (kA)	Bus Number	Bus Name	Bus Voltage (kV)	Fault Current 3-LG (kA)	Bus Number	Bus Name	Bus Voltage (kV)	Fault Current 3-LG (kA)
524472	LOPEZ 3	115	2.88	524784	W_CLOVIS 3	115	5.88	524915	SW_4K33 6	230	9.79
524477	CAMPBELL_ST3	115	2.87	524808	FE-CLVS_INT3	115	6.30	525531	TOLK_WEST 6	230	31.18
524486	CAPROCK 3	115	3.85	524821	CURRY 2	69	4.38	560025	NORTON 6	230	2.80
524502	NORTON 3	115	4.56	524822	CURRY 3	115	10.93	560032	G15-018T	115	5.97
524509	FE-TUCMCARI3	115	3.16	524831	FE-HOLLAND 3	115	8.74	562731	A15-003-TAP	115	1.66
524669	DS-#20 3	115	4.88	524838	FE-CLOVIS2 3	115	10.31	583280	ASGI2012-002	115	1.05
524764	NORRIS_TP 3	115	10.91	524874	OASIS 3	115	9.93	583310	GEN-2013-022	115	3.85
524768	PLSNT_HILL 3	115	9.79	524875	OASIS 6	230	7.97	583610	CEILO-TAP-N	69	1.29
524770	PLSNT_HILL 6	230	6.51	524885	SN_JUAN_TAP6	230	4.77	584160	GEN-2014-066	115	3.78
524773	E_CLOVIS 3	115	8.87	524908	ROOSEVELT 3	115	10.78	584310	A14-002-TAP	115	1.29
524776	N_CLOVIS_TP3	115	6.63	524909	ROSEVELT_N 6	230	9.79	584311	ASGI2014-002	115	1.27
524777	N_CLOVIS 3	115	6.05	524911	ROSEVELT_S 6	230	9.79	584730	ASGI2015-003	115	1.62

SECTION 5: POWER FACTOR ANALYSIS

The objective of this task is to quantify the power factor at the point of interconnection for the wind farms during base case and system contingencies. SPP transmission planning practice requires interconnecting generation projects to maintain the power factor (pf) at the Point of Interconnection (POI) within +/- 0.95 pf for system intact conditions and for post-contingency conditions. This is analyzed by having the wind farm maintain a prescribed voltage schedule at the point of interconnection of 1.0 p.u. voltage.

The 2015 Summer Peak, 2015 Winter Peak, 2020 Summer Peak, 2020 Winter Peak, and 2025 Summer Peak power flows provided by SPP were examined prior to the Power Factor Analysis to ensure they contained the proposed study project modeled at 100% of the nameplate rating and any previously queued projects listed in Table 2-2. There was no suspect power flow data in

the study area. The proposed study project and any previously queued projects at the same point of interconnection were turned off during the power factor analysis. The wind farm(s) were then replaced by a generator modeled at the high side bus with the same real power (MW) capability as the wind farm(s) and open limits for the reactive power set points (Mvar). The generator was set to hold the POI scheduled bus voltage. All N-1, three-phase fault contingencies from Table 2-3 were then applied and the reactive power required to maintain the bus voltage was recorded.

5.1 Approach

Several upgrades were implemented to resolve system violations[2]. Faults at the OKU 345 kV substation, specifically the loss of OKU to G14-074 Tap 345 kV line (FLT214-3PH), resulted in low voltages near the Border 345 kV area. The following upgrades were provided by SPP to mitigate the low voltages in the Border 345 kV area prior to performing the Power Factor Analysis:

- Increase Border SVC to 200 Mvar
- Add a 200 Mvar capacitor bank to Border 345 kV (4 steps of 50 Mvar each)

GEN-2014-046, GEN-2014-033, GEN-2014-034, and GEN-2014-035 were disabled and the generators were placed at the study project's point of interconnect bus. The generators were modeled with PGEN = 125.4 MW for GEN-2014-046, PGEN= 70.0 MW for GEN-2014-033, PGEN = 70.0 MW for GEN-2014-034, PGEN = 30.0 MW for GEN-2014-035, and QMin = -9999 Mvar and QMax = 9999 Mvar for all generators. All buses and transformers connected from the study project's POI bus to the generators were disabled. The scheduled voltage was set to 1.0048 p.u. for 2015 Summer Peak conditions, 1.0192 for the 2020 Summer Peak Conditions, and 1.00 p.u. for the 2015 Winter Peak, 2020 Winter Peak, and 2025 Summer Peak conditions.

GEN-2014-065 was disabled and a generator was placed at the study project's point of interconnect bus. The generator was modeled with PGEN = 99.0 MW, QMin = -9999 Mvar, and QMax = 9999 Mvar. All buses and transformers connected from the study project's POI bus to GEN-2014-065 were disabled. The scheduled voltage was set to 1.0018 for the 2015 Winter Peak conditions, and 1.00 p.u. for the 2015 Summer Peak, 2020 Summer Peak, 2020 Winter Peak, and 2025 Summer Peak conditions.

GEN-2014-074 was disabled and a generator was placed at the study project's point of interconnect bus. The generator was modeled with PGEN = 152.0 MW, QMin = -9999 Mvar, and QMax = 9999 Mvar. All buses and transformers connected from the study project's POI bus to GEN-2014-074 were disabled. The scheduled voltage was set to 1.00 p.u. for all study years.

[2] SPP added additional Network Upgrades to the powerflow cases prior to providing the cases to MEPPI

GEN-2015-009 and Hobbs Generator were disabled and the generators were placed at the study project's point of interconnect bus. The generators were modeled with PGEN = 300 MW for GEN-2015-009, PGEN = 213.0 MW for the Hobbs Generator, and QMin = -9999 Mvar and QMax = 9999 Mvar for all generators. All buses and transformers connected from the study project's POI bus to the generators were disabled. The scheduled voltage was set to 1.0105 p.u. for 2015 Summer Peak conditions, 1.0100 for the 2015 Winter Peak conditions, 1.0041 p.u. for the 2020 Summer Peak conditions, 1.0049 for the 2020 Winter Peak conditions, and 1.0109 for the 2025 Summer Peak conditions.

GEN-2015-010 was disabled and a generator was placed at the study project's point of interconnect bus. The generator was modeled with PGEN = 250.7 MW, QMin = -9999 Mvar, and QMax = 9999 Mvar. All buses and transformers connected from the study project's POI bus to GEN-2015-010 were disabled. The scheduled voltage was set to 1.0006 p.u. for 2015 Summer Peak conditions, 1.0045 for the 2015 Winter Peak conditions, 1.0005 p.u. for the 2020 Summer Peak conditions, 1.0008 for the 2020 Winter Peak conditions, and 1.000 for the 2025 Summer Peak conditions.

GEN-2015-014 was disabled and a generator was placed at the study project's point of interconnect bus. The generator was modeled with PGEN = 150.0 MW, QMin = -9999 Mvar, and QMax = 9999 Mvar. All buses and transformers connected from the study project's POI bus to GEN-2015-014 were disabled. The scheduled voltage was set to 1.0134 p.u. for 2015 Summer Peak conditions, 1.0122 for the 2015 Winter Peak conditions, 1.0121 p.u. for the 2020 Summer Peak conditions, 1.0133 for the 2020 Winter Peak conditions, and 1.0239 for the 2025 Summer Peak conditions.

GEN-2015-018 was disabled and a generator was placed at the study project's point of interconnect bus. The generator was modeled with PGEN = 80.0 MW, QMin = -9999 Mvar, and QMax = 9999 Mvar. All buses and transformers connected from the study project's POI bus to GEN-2015-018 were disabled. The scheduled voltage was set to 1.0060 p.u. for 2015 Summer Peak conditions, 1.0159 for the 2015 Winter Peak conditions, 1.0036 p.u. for the 2020 Summer Peak conditions, 1.0145 for the 2020 Winter Peak conditions, and 1.0013 for the 2025 Summer Peak conditions.

GEN-2015-020 was disabled and a generator was placed at the study project's point of interconnect bus. The generator was modeled with PGEN = 100.0 MW, QMin = -9999 Mvar, and QMax = 9999 Mvar. All buses and transformers connected from the study project's POI bus to GEN-2015-020 were disabled. The scheduled voltage was set to 1.0337 p.u. for 2015 Summer Peak conditions, 1.0345 for the 2015 Winter Peak conditions, 1.0356 p.u. for the 2020 Summer Peak conditions, 1.0331 for the 2020 Winter Peak conditions, and 1.0290 for the 2025 Summer Peak conditions.

GEN-2015-022 was disabled and a generator was placed at the study project's point of interconnect bus. The generator was modeled with PGEN = 112.0 MW, QMin = -9999 Mvar, and QMax = 9999 Mvar. All buses and transformers connected from the study project's POI bus to GEN-2015-022 were disabled. The scheduled voltage was set to 1.0225 p.u. for 2015 Summer Peak conditions, 1.0320 for the 2015 Winter Peak conditions, 1.0143 p.u. for the 2020 Summer Peak conditions, 1.0284 for the 2020 Winter Peak conditions, and 1.0043 for the 2025 Summer Peak conditions.

ASGI-2015-002, GNIRE SNL, and GNIRE ALSTOM were disabled and the generators were placed at the study project's point of interconnect bus. The generators were modeled with PGEN = 2.0 MW for ASGI-2015-002, PGEN = 0.9 MW for GNIRE SNL, PGEN = 1.67 MW for GNIRE ALSTOM, QMin = -9999 Mvar, and QMax = 9999 Mvar for all generators. All buses and transformers connected from the study project's POI bus to the generators were disabled. The scheduled voltage was set to 1.0429 p.u. for 2015 Summer Peak conditions, 1.0387 for the 2015 Winter Peak conditions, 1.0258 p.u. for the 2020 Summer Peak conditions, 1.0191 for the 2020 Winter Peak conditions, and 1.0345 for the 2025 Summer Peak conditions.

ASGI-2015-003, ASGI-2013-002, and ASGI-2014-002 were disabled and the generators were placed at the study project's point of interconnect bus. The generator was modeled with PGEN = 2.0 MW for ASGI-2015-003, PGEN = 18.4 MW for ASGI-2013-002, PGEN = 49.6 MW for ASGI-2014-002, and QMin = -9999 Mvar, and QMax = 9999 Mvar for all generators. All buses and transformers connected from the study project's POI bus to the generators were disabled. The scheduled voltage was set to 1.00 p.u. for all study years.

5.2 Power Factor Analysis Results

The power factor was calculated for the 2015 Summer Peak, 2015 Winter Peak, 2020 Summer Peak, 2020 Winter Peak, and 2025 Summer Peak condition. The following tables show the power factor results for the study generators:

- Table 5-1: Power Factor Analysis for GEN-2014-046
- Table 5-2: Power Factor Analysis for GEN-2014-065
- Table 5-3: Power Factor Analysis for GEN-2014-074
- Table 5-4: Power Factor Analysis for GEN-2015-009
- Table 5-5: Power Factor Analysis for GEN-2015-010
- Table 5-6: Power Factor Analysis for GEN-2015-014
- Table 5-7: Power Factor Analysis for GEN-2015-018
- Table 5-8: Power Factor Analysis for GEN-2015-020
- Table 5-9: Power Factor Analysis for GEN-2015-022
- Table 5-10: Power Factor Analysis for ASGI-2015-002

- Table 5-11: Power Factor Analysis for ASGI-2015-003

Note that a positive Q (Mvar) output illustrates that the generator is absorbing reactive power from the system, implying a leading power factor; a negative Q (Mvar) illustrates that the generator is supplying reactive power to the system, implying a lagging power factor.

Table 5-1
Power Factor Analysis: GEN-2014-046

Ref No.	Case	2015 Summer Peak			2015 Winter Peak			2020 Summer Peak			2020 Winter Peak			2025 Summer Peak		
		Power Factor		Q (MVAR)	Power Factor		Q (MVAR)	Power Factor		Q (MVAR)	Power Factor		Q (MVAR)	Power Factor		Q (MVAR)
0	Base	0.990	Leading	17.56	0.997	Leading	9.74	0.985	Leading	21.86	0.996	Leading	11.90	0.997	Leading	9.00
1	FLT01-3PH	0.992	Leading	16.23	0.997	Leading	8.92	0.986	Leading	20.97	0.996	Leading	10.90	0.998	Leading	7.92
2	FLT02-3PH	0.992	Leading	15.78	0.998	Leading	8.66	0.987	Leading	20.45	0.996	Leading	10.57	0.998	Leading	7.17
3	FLT03-3PH	0.995	Leading	13.13	0.999	Leading	4.24	0.994	Leading	13.62	0.997	Leading	9.79	0.999	Leading	5.60
4	FLT04-3PH	0.991	Leading	16.94	0.997	Leading	9.50	0.986	Leading	21.13	0.996	Leading	10.95	0.998	Leading	7.89
5	FLT05-3PH	0.986	Leading	20.99	0.995	Leading	12.30	0.985	Leading	21.68	0.989	Leading	18.41	0.991	Leading	16.50
6	FLT06-3PH	0.990	Leading	18.17	0.998	Leading	7.18	0.998	Leading	8.56	0.998	Leading	8.16	0.997	Leading	9.96
7	FLT07-3PH	0.991	Leading	17.04	0.997	Leading	9.56	0.986	Leading	21.25	0.996	Leading	11.09	0.998	Leading	8.06
8	FLT08-3PH	0.990	Leading	17.61	0.997	Leading	9.06	0.988	Leading	19.73	0.998	Leading	7.18	1.000	Leading	2.15
9	FLT09-3PH	0.991	Leading	16.98	0.997	Leading	9.44	0.986	Leading	21.35	0.995	Leading	12.09	0.998	Leading	8.48
10	FLT10-3PH	0.991	Leading	17.05	0.997	Leading	9.23	0.985	Leading	21.90	0.995	Leading	12.44	0.997	Leading	9.22
11	FLT11-3PH	0.991	Leading	17.23	0.997	Leading	9.14	0.986	Leading	21.25	0.996	Leading	11.91	0.998	Leading	7.89
12	FLT12-3PH	0.991	Leading	16.96	0.997	Leading	9.15	0.985	Leading	21.84	0.996	Leading	11.89	0.997	Leading	8.90
13	FLT13-3PH	0.991	Leading	17.36	0.997	Leading	9.71	0.985	Leading	22.13	0.995	Leading	12.21	0.997	Leading	9.43
14	FLT14-3PH	0.995	Leading	12.27	0.998	Leading	7.91	0.986	Leading	21.43	0.996	Leading	11.50	0.998	Leading	7.89
15	FLT15-3PH	0.991	Leading	17.13	0.997	Leading	9.30	0.985	Leading	21.77	0.996	Leading	11.39	0.998	Leading	8.74
16	FLT16-3PH	0.990	Leading	17.58	0.997	Leading	9.77	0.985	Leading	21.87	0.995	Leading	11.96	0.997	Leading	9.06
17	FLT22-3PH	0.990	Leading	17.56	0.997	Leading	9.74	0.985	Leading	21.80	0.996	Leading	11.85	0.997	Leading	8.95
18	FLT23-3PH	0.990	Leading	17.55	0.997	Leading	9.85	0.985	Leading	21.74	0.996	Leading	11.83	0.997	Leading	8.90
19	FLT24-3PH	0.990	Leading	17.76	0.997	Leading	9.73	0.985	Leading	22.08	0.995	Leading	12.16	0.997	Leading	9.36
20	FLT25-3PH	0.990	Leading	17.55	0.997	Leading	9.74	0.985	Leading	21.86	0.996	Leading	11.90	0.997	Leading	9.00
21	FLT28-3PH	0.990	Leading	17.56	0.997	Leading	9.69	0.985	Leading	21.83	0.996	Leading	11.89	0.997	Leading	9.00
22	FLT29-3PH	N/A	N/A	N/A	0.997	Leading	9.74	N/A	N/A	N/A	N/A	N/A	N/A	0.997	Leading	8.99
23	FLT30-3PH	N/A	N/A	N/A	0.997	Leading	9.71	N/A	N/A	N/A	N/A	N/A	N/A	0.997	Leading	9.04
24	FLT31-3PH	N/A	N/A	N/A	0.997	Leading	9.91	N/A	N/A	N/A	N/A	N/A	N/A	0.998	Leading	8.76
25	FLT33-3PH	0.991	Leading	17.37	0.997	Leading	9.52	0.985	Leading	21.86	0.996	Leading	11.90	0.997	Leading	9.00
26	FLT34-3PH	0.990	Leading	17.56	0.997	Leading	9.74	0.985	Leading	21.83	0.996	Leading	11.88	0.997	Leading	8.95
27	FLT35-3PH	0.990	Leading	17.56	0.997	Leading	9.75	0.985	Leading	21.86	0.996	Leading	11.91	0.997	Leading	9.01
28	FLT38-3PH	0.990	Leading	17.56	0.997	Leading	9.74	0.985	Leading	21.85	0.996	Leading	11.89	0.997	Leading	8.99
29	FLT42-3PH	0.990	Leading	17.55	0.997	Leading	9.72	0.985	Leading	21.81	0.996	Leading	11.87	0.997	Leading	8.92
30	FLT45-3PH	0.990	Leading	17.49	0.997	Leading	9.64	0.985	Leading	21.76	0.996	Leading	11.80	0.998	Leading	8.83
31	FLT46-3PH	0.990	Leading	17.58	0.997	Leading	9.81	0.985	Leading	21.93	0.995	Leading	11.99	0.997	Leading	9.13
32	FLT47-3PH	0.990	Leading	17.56	0.997	Leading	9.75	0.985	Leading	21.87	0.996	Leading	11.92	0.997	Leading	9.03
33	FLT48-3PH	0.990	Leading	17.60	0.997	Leading	9.05	0.988	Leading	19.72	0.998	Leading	7.17	1.000	Leading	2.13
34	FLT49-3PH	0.992	Leading	16.25	0.997	Leading	9.71	0.982	Leading	24.09	0.993	Leading	15.09	0.995	Leading	11.95
35	FLT50-3PH	0.993	Leading	14.86	0.998	Leading	8.12	0.989	Leading	18.57	0.998	Leading	7.84	1.000	Leading	3.74
36	FLT51-3PH	0.990	Leading	17.75	0.997	Leading	9.93	0.985	Leading	22.19	0.996	Leading	11.82	0.997	Leading	9.10
38	FLT53-3PH	0.990	Leading	17.58	0.997	Leading	9.33	0.986	Leading	21.44	0.996	Leading	10.67	0.998	Leading	7.81
40	FLT55-3PH	0.990	Leading	17.72	0.997	Leading	10.00	0.985	Leading	22.20	0.996	Leading	11.84	0.997	Leading	9.25
41	FLT56-3PH	0.990	Leading	17.57	0.997	Leading	9.73	0.985	Leading	21.88	0.996	Leading	11.90	0.997	Leading	9.03
42	FLT57-3PH	0.990	Leading	17.57	0.997	Leading	9.74	0.985	Leading	21.88	0.996	Leading	11.90	0.997	Leading	9.03
43	FLT58-3PH	0.990	Leading	17.75	0.997	Leading	10.45	0.985	Leading	22.05	0.995	Leading	12.07	0.997	Leading	9.01
44	FLT59-3PH	0.990	Leading	17.57	0.997	Leading	9.75	0.985	Leading	21.87	0.996	Leading	11.91	0.997	Leading	9.03
47	FLT62-3PH	0.990	Leading	17.56	0.997	Leading	9.74	0.985	Leading	21.86	0.996	Leading	11.90	0.997	Leading	9.00
49	FLT64-3PH	0.990	Leading	17.47	0.997	Leading	9.63	0.985	Leading	21.69	0.996	Leading	11.75	0.998	Leading	8.80
51	FLT67-3PH	0.990	Leading	17.50	0.997	Leading	9.66	0.986	Leading	21.49	0.996	Leading	11.79	0.998	Leading	8.48
55	FLT71-3PH	0.990	Leading	17.57	0.997	Leading	9.75	0.985	Leading	21.86	0.996	Leading	11.91	0.997	Leading	9.01
56	FLT72-3PH	0.990	Leading	17.57	0.997	Leading	9.76	0.985	Leading	21.87	0.996	Leading	11.92	0.997	Leading	9.02
57	FLT73-3PH	0.990	Leading	17.56	0.997	Leading	9.71	0.985	Leading	21.88	0.996	Leading	11.87	0.997	Leading	9.03
58	FLT74-3PH	0.990	Leading	17.56	0.997	Leading	9.74	0.985	Leading	21.87	0.996	Leading	11.89	0.997	Leading	9.02
59	FLT75-3PH	0.990	Leading	17.56	0.997	Leading	9.74	0.985	Leading	21.85	0.996	Leading	11.89	0.997	Leading	8.98
60	FLT76-3PH	0.990	Leading	17.56	0.997	Leading	9.75	0.985	Leading	21.86	0.996	Leading	11.91	0.997	Leading	9.00
61	FLT77-3PH	0.990	Leading	17.58	0.997	Leading	9.76	0.985	Leading	21.85	0.996	Leading	11.89	0.997	Leading	8.98
62	FLT78-3PH	0.990	Leading	17.56	0.997	Leading	9.75	0.985	Leading	21.86	0.996	Leading	11.91	0.997	Leading	9.01
63	FLT79-3PH	0.990	Leading	17.56	0.997	Leading	9.74	0.985	Leading	21.86	0.996	Leading	11.90	0.997	Leading	9.01
64	FLT80-3PH	0.990	Leading	17.57	0.997	Leading	9.78	0.985	Leading	21.86	0.996	Leading	11.93	0.997	Leading	9.00
65	FLT81-3PH	0.990	Leading	17.55	0.997	Leading	9.72	0.985	Leading	21.84	0.996	Leading	11.89	0.997	Leading	8.98
66	FLT82-3PH	0.990	Leading	17.56	0.997	Leading	9.73	0.985	Leading	21.87	0.996	Leading	11.91	0.997	Leading	9.03
67	FLT88-3PH	0.990	Leading	17.55	0.997	Leading	9.74	0.985	Leading	21.79	0.996	Leading	11.74	0.997	Leading	8.91
68	FLT90-3PH	0.991	Leading	17.28	0.997	Leading	9.40	0.986	Leading	21.28	0.996	Leading	11.00	0.998	Leading	8.07
69	FLT91-3PH	0.990	Leading	17.59	0.997	Leading	9.76	0.985	Leading	21.86	0.996	Leading	11.93	0.997	Leading	9.01
70	FLT93-3PH	0.990	Leading	17.56	0.997	Leading	9.74	0.985	Leading	21.85	0.996	Leading	11.90	0.997	Leading	9.00
71	FLT94-3PH	0.990	Leading	17.56	0.997	Leading	9.74	0.985	Leading	21.85	0.996	Leading	11.90	0.997	Leading	9.00
72	FLT95-3PH	0.990	Leading	17.56	0.997	Leading	9.75	0.985	Leading	21.87	0.996	Leading	11.91	0.997	Leading	9.03
73	FLT96-3PH	0.990	Leading	17.56	0.997	Leading	9.74	0.985	Leading	21.86	0.996	Leading	11.90	0.997	Leading	9.00
74	FLT97-3PH	0.990	Leading	17.51	0.997	Leading	9.71	0.985	Leading	21.84	0.996	Leading	11.89	0.997	Leading	9.00

Table 5-1 (Continued)
Power Factor Analysis: GEN-2014-046

Ref No.	Case	2015 Summer Peak			2015 Winter Peak			2020 Summer Peak			2020 Winter Peak			2025 Summer Peak		
		Power Factor		Q (MVAR)	Power Factor		Q (MVAR)	Power Factor		Q (MVAR)	Power Factor		Q (MVAR)	Power Factor		Q (MVAR)
76	FLT99-3PH	0.987	Leading	20.44	0.996	Leading	11.36	0.981	Leading	25.12	0.992	Leading	15.59	0.995	Leading	12.46
77	FLT100-3PH	0.990	Leading	17.41	0.997	Leading	9.57	0.985	Leading	21.69	0.996	Leading	11.73	0.998	Leading	8.85
78	FLT101-3PH	0.990	Leading	17.53	0.997	Leading	9.72	0.985	Leading	21.82	0.996	Leading	11.87	0.997	Leading	8.97
79	FLT102-3PH	0.990	Leading	17.41	0.997	Leading	9.57	0.985	Leading	21.69	0.996	Leading	11.73	0.998	Leading	8.85
80	FLT103-3PH	0.991	Leading	16.63	0.998	Leading	8.65	0.986	Leading	20.82	0.996	Leading	10.84	0.998	Leading	8.05
81	FLT104-3PH	0.990	Leading	17.56	0.997	Leading	9.74	0.985	Leading	21.86	0.996	Leading	11.90	0.997	Leading	9.00
82	FLT105-3PH	0.992	Leading	16.44	0.998	Leading	8.59	0.986	Leading	20.91	0.996	Leading	10.82	0.998	Leading	7.89
83	FLT106-3PH	0.990	Leading	17.91	0.997	Leading	9.86	0.984	Leading	22.43	0.994	Leading	13.62	0.997	Leading	9.09
84	FLT107-3PH	0.990	Leading	17.52	0.997	Leading	9.69	0.985	Leading	21.82	0.996	Leading	11.85	0.997	Leading	8.96
85	FLT108-3PH	0.990	Leading	17.63	0.997	Leading	10.28	0.984	Leading	22.38	0.995	Leading	11.98	0.997	Leading	9.06
87	FLT116-3PH	0.990	Leading	17.54	0.997	Leading	9.72	0.985	Leading	21.99	0.995	Leading	12.32	0.997	Leading	9.18
88	FLT117-3PH	N/A	N/A	N/A	N/A	N/A	N/A	0.984	Leading	22.51	0.995	Leading	12.51	0.997	Leading	9.15
89	FLT122-3PH	0.990	Leading	17.76	0.997	Leading	10.21	0.985	Leading	21.98	0.995	Leading	12.33	0.997	Leading	8.97
90	FLT123-3PH	0.990	Leading	17.45	0.997	Leading	10.08	0.985	Leading	22.10	0.995	Leading	12.39	0.997	Leading	9.44
91	FLT125-3PH	0.990	Leading	17.62	0.996	Leading	10.89	0.985	Leading	21.74	0.996	Leading	11.71	0.998	Leading	8.83
92	FLT126-3PH	0.990	Leading	17.58	0.997	Leading	9.68	0.985	Leading	21.88	0.996	Leading	11.83	0.997	Leading	9.07
93	FLT129-3PH	N/A	N/A	N/A	0.997	Leading	9.74	0.985	Leading	22.10	0.995	Leading	11.95	0.997	Leading	9.45
94	FLT130-3PH	0.990	Leading	17.55	0.997	Leading	9.78	N/A	N/A	N/A	0.996	Leading	11.92	N/A	N/A	N/A
95	FLT132-3PH	0.990	Leading	17.59	0.997	Leading	9.80	0.985	Leading	21.88	0.996	Leading	11.93	0.997	Leading	9.03
96	FLT133-3PH	0.990	Leading	17.60	0.997	Leading	9.77	0.985	Leading	21.89	0.996	Leading	11.90	0.997	Leading	9.06
97	FLT134-3PH	0.990	Leading	17.59	0.997	Leading	9.74	0.985	Leading	21.87	0.996	Leading	11.91	0.997	Leading	9.01
98	FLT135-3PH	0.990	Leading	17.56	0.997	Leading	9.74	0.985	Leading	21.86	0.996	Leading	11.90	0.997	Leading	9.01
99	FLT136-3PH	0.990	Leading	17.56	0.997	Leading	9.74	0.985	Leading	21.85	0.996	Leading	11.90	0.997	Leading	8.99
100	FLT137-3PH	0.990	Leading	17.56	0.997	Leading	9.75	0.985	Leading	21.86	0.996	Leading	11.91	0.997	Leading	9.00
101	FLT138-3PH	0.990	Leading	17.56	0.997	Leading	9.75	0.985	Leading	21.87	0.996	Leading	11.91	0.997	Leading	9.02
102	FLT139-3PH	0.990	Leading	17.56	0.997	Leading	9.80	0.985	Leading	21.86	0.996	Leading	11.88	0.997	Leading	9.01
103	FLT140-3PH	0.990	Leading	17.61	0.997	Leading	9.73	0.985	Leading	21.88	0.996	Leading	11.87	0.997	Leading	8.98
104	FLT141-3PH	0.990	Leading	17.55	0.997	Leading	9.83	0.985	Leading	21.83	0.996	Leading	11.89	0.997	Leading	8.94
105	FLT142-3PH	0.990	Leading	17.59	0.997	Leading	9.85	0.985	Leading	21.85	0.996	Leading	11.91	0.997	Leading	8.99
106	FLT143-3PH	0.990	Leading	17.60	0.997	Leading	9.72	0.985	Leading	21.87	0.996	Leading	11.83	0.997	Leading	9.01
107	FLT144-3PH	0.990	Leading	17.56	0.997	Leading	9.76	0.985	Leading	21.83	0.996	Leading	11.90	0.997	Leading	8.93
108	FLT145-3PH	0.990	Leading	17.57	0.997	Leading	9.78	0.985	Leading	21.88	0.996	Leading	11.91	0.997	Leading	9.03
109	FLT146-3PH	0.990	Leading	17.60	0.997	Leading	9.74	0.985	Leading	21.92	0.996	Leading	11.88	0.997	Leading	9.08
110	FLT147-3PH	0.990	Leading	17.57	0.997	Leading	9.74	0.985	Leading	21.85	0.996	Leading	11.90	0.997	Leading	8.98
111	FLT148-3PH	0.990	Leading	17.56	0.997	Leading	10.28	0.985	Leading	21.86	0.995	Leading	12.43	0.997	Leading	9.00
112	FLT148-3PH	0.990	Leading	17.63	0.997	Leading	10.20	0.984	Leading	22.37	0.996	Leading	11.89	0.997	Leading	9.03
113	FLT150-3PH	0.990	Leading	17.56	0.997	Leading	10.06	0.985	Leading	22.26	0.996	Leading	11.62	0.997	Leading	8.90
114	FLT151-3PH	0.991	Leading	17.33	0.997	Leading	9.62	0.986	Leading	21.57	0.996	Leading	11.82	0.998	Leading	8.63
115	FLT152-3PH	0.990	Leading	17.45	0.997	Leading	9.67	0.985	Leading	21.80	0.996	Leading	11.84	0.998	Leading	8.84
116	FLT153-3PH	0.990	Leading	17.46	0.997	Leading	9.57	0.985	Leading	21.77	0.996	Leading	11.73	0.997	Leading	8.89
117	FLT154-3PH	0.990	Leading	17.41	0.998	Leading	8.81	0.985	Leading	21.69	0.996	Leading	10.83	0.998	Leading	8.85
118	FLT155-3PH	0.991	Leading	16.89	0.997	Leading	9.80	0.986	Leading	21.01	0.995	Leading	11.96	0.998	Leading	8.02
119	FLT156-3PH	0.990	Leading	17.62	0.997	Leading	9.55	0.985	Leading	22.33	0.996	Leading	11.73	0.997	Leading	9.02
120	FLT157-3PH	0.990	Leading	17.41	0.997	Leading	9.59	0.985	Leading	21.70	0.996	Leading	11.76	0.998	Leading	8.84
121	FLT158-3PH	0.990	Leading	17.42	0.997	Leading	9.88	0.985	Leading	21.71	0.995	Leading	12.00	0.998	Leading	8.86
122	FLT159-3PH	0.990	Leading	17.65	0.997	Leading	9.90	0.985	Leading	21.99	0.995	Leading	12.14	0.997	Leading	9.09
123	FLT160-3PH	0.990	Leading	18.08	0.997	Leading	9.69	0.984	Leading	22.87	0.996	Leading	11.88	0.997	Leading	9.69
124	FLT161-3PH	0.990	Leading	17.50	0.997	Leading	9.02	0.985	Leading	21.84	0.996	Leading	11.00	0.997	Leading	8.97
125	FLT162-3PH	0.990	Leading	17.45	0.997	Leading	9.01	0.985	Leading	21.61	0.996	Leading	11.56	0.998	Leading	8.68
126	FLT163-3PH	0.990	Leading	17.56	0.997	Leading	9.00	0.986	Leading	21.53	0.996	Leading	11.55	0.998	Leading	8.66
127	FLT164-3PH	0.990	Leading	17.56	1.000	Leading	1.61	0.986	Leading	21.48	0.999	Leading	6.58	0.998	Leading	8.63
128	FLT165-3PH	0.973	Leading	29.94	0.999	Leading	5.43	1.000	Leading	0.95	0.982	Leading	24.19	0.998	Leading	8.34
129	FLT166-3PH	0.992	Leading	15.52	0.997	Leading	9.74	0.989	Leading	18.74	0.996	Leading	11.90	0.998	Leading	7.71
130	FLT167-3PH	0.990	Leading	17.56	0.997	Leading	9.73	0.985	Leading	21.86	0.996	Leading	11.82	0.997	Leading	9.00
131	FLT168-3PH	0.991	Leading	17.39	0.997	Leading	9.74	0.985	Leading	21.70	0.996	Leading	11.90	0.998	Leading	8.78
132	FLT169-3PH	0.990	Leading	17.56	0.998	Leading	7.87	0.985	Leading	21.86	0.997	Leading	9.30	0.997	Leading	9.00
133	FLT170-3PH	0.991	Leading	16.49	0.997	Leading	9.74	0.987	Leading	20.55	0.996	Leading	11.90	0.998	Leading	8.68
134	FLT171-3PH	0.990	Leading	17.56	0.997	Leading	9.64	0.985	Leading	21.86	0.996	Leading	11.76	0.997	Leading	9.00
135	FLT172-3PH	0.990	Leading	17.48	0.997	Leading	9.74	0.985	Leading	21.70	0.996	Leading	11.90	0.998	Leading	8.82
136	FLT173-3PH	0.990	Leading	17.56	0.997	Leading	9.75	0.985	Leading	21.86	0.996	Leading	11.93	0.997	Leading	9.00
137	FLT174-3PH	0.990	Leading	17.56	0.997	Leading	9.73	0.985	Leading	21.87	0.996	Leading	11.89	0.997	Leading	9.03
138	FLT175-3PH	0.990	Leading	17.55	0.997	Leading	9.73	0.985	Leading	21.85	0.996	Leading	11.89	0.997	Leading	8.99
139	FLT176-3PH	0.990	Leading	17.54	0.997	Leading	9.74	0.985	Leading	21.84	0.996	Leading	11.90	0.997	Leading	8.99
140	FLT177-3PH	0.990	Leading	17.56	0.997	Leading	9.74	0.985	Leading	21.85	0.996	Leading	11.90	0.997	Leading	8.99
141	FLT178-3PH	0.990	Leading	17.56	0.997	Leading	9.74	0.985	Leading	21.86	0.996	Leading	11.89	0.997	Leading	9.00
142	FLT179-3PH	0.990	Leading	17.56	0.997	Leading	9.72	0.985	Leading	21.84	0.996	Leading	11.88	0.997	Leading	8.98

Table 5-1 (Continued)
Power Factor Analysis: GEN-2014-046

Ref No.	Case	2015 Summer Peak			2015 Winter Peak			2020 Summer Peak			2020 Winter Peak			2025 Summer Peak		
		Power Factor		Q (MVAR)	Power Factor		Q (MVAR)	Power Factor		Q (MVAR)	Power Factor		Q (MVAR)	Power Factor		Q (MVAR)
143	FLT180-3PH	0.990	Leading	17.54	0.997	Leading	9.74	0.985	Leading	21.84	0.996	Leading	11.90	0.997	Leading	8.99
144	FLT181-3PH	0.990	Leading	17.56	0.997	Leading	9.74	0.985	Leading	21.86	0.996	Leading	11.89	0.997	Leading	9.00
145	FLT182-3PH	0.990	Leading	17.56	0.997	Leading	9.68	0.985	Leading	21.85	0.996	Leading	11.81	0.997	Leading	8.98
146	FLT183-3PH	0.990	Leading	17.52	0.997	Leading	9.74	0.985	Leading	21.78	0.996	Leading	11.90	0.997	Leading	8.90
147	FLT184-3PH	0.990	Leading	17.55	0.997	Leading	9.75	0.985	Leading	21.85	0.996	Leading	11.91	0.997	Leading	9.00
148	FLT185-3PH	0.990	Leading	17.56	0.997	Leading	9.73	0.985	Leading	21.86	0.996	Leading	11.90	0.997	Leading	9.00
149	FLT186-3PH	0.990	Leading	17.56	0.997	Leading	9.72	0.985	Leading	21.84	0.996	Leading	11.88	0.997	Leading	8.98
150	FLT187-3PH	0.990	Leading	17.55	0.997	Leading	9.74	0.985	Leading	21.84	0.996	Leading	11.90	0.997	Leading	8.97
151	FLT188-3PH	0.990	Leading	17.56	0.997	Leading	9.74	0.985	Leading	21.86	0.996	Leading	11.90	0.997	Leading	9.00
152	FLT189-3PH	0.990	Leading	17.56	0.997	Leading	9.74	0.985	Leading	21.86	0.996	Leading	11.91	0.997	Leading	9.00
153	FLT190-3PH	0.990	Leading	17.56	0.997	Leading	9.74	0.985	Leading	21.86	0.996	Leading	11.93	0.997	Leading	9.01
154	FLT191-3PH	0.990	Leading	17.56	0.997	Leading	9.71	0.985	Leading	21.88	0.996	Leading	11.85	0.997	Leading	9.03
155	FLT192-3PH	0.990	Leading	17.51	0.997	Leading	9.74	0.985	Leading	21.80	0.996	Leading	11.90	0.997	Leading	8.95
156	FLT193-3PH	0.990	Leading	17.56	0.997	Leading	9.73	0.985	Leading	21.86	0.996	Leading	11.90	0.997	Leading	9.00
157	FLT194-3PH	0.990	Leading	17.55	0.997	Leading	9.71	0.985	Leading	21.85	0.996	Leading	11.89	0.997	Leading	8.99
158	FLT195-3PH	0.990	Leading	17.51	0.997	Leading	9.70	0.985	Leading	21.84	0.996	Leading	11.77	0.997	Leading	9.00
159	FLT196-3PH	0.990	Leading	17.53	0.997	Leading	9.74	0.985	Leading	21.78	0.996	Leading	11.91	0.998	Leading	8.88
160	FLT197-3PH	0.990	Leading	17.56	0.997	Leading	9.67	0.985	Leading	22.01	0.996	Leading	11.73	0.997	Leading	9.23
161	FLT198-3PH	0.990	Leading	17.55	0.997	Leading	9.87	0.985	Leading	21.79	0.995	Leading	12.09	0.998	Leading	8.86
162	FLT199-3PH	0.990	Leading	17.63	0.997	Leading	9.68	0.985	Leading	22.03	0.996	Leading	11.74	0.997	Leading	9.24
163	FLT200-3PH	0.990	Leading	17.55	0.997	Leading	9.72	0.985	Leading	21.80	0.996	Leading	11.84	0.997	Leading	8.89
164	FLT201-3PH	0.990	Leading	17.58	0.997	Leading	9.68	0.985	Leading	21.90	0.996	Leading	11.75	0.997	Leading	9.05
165	FLT202-3PH	0.990	Leading	17.56	0.997	Leading	9.79	0.985	Leading	21.81	0.995	Leading	11.99	0.997	Leading	8.90
166	FLT203-3PH	0.990	Leading	17.58	0.997	Leading	9.84	0.985	Leading	21.96	0.995	Leading	12.03	0.997	Leading	9.18
167	FLT204-3PH	0.990	Leading	17.61	0.997	Leading	9.74	0.985	Leading	21.94	0.996	Leading	11.90	0.997	Leading	9.10
168	FLT205-3PH	0.990	Leading	17.56	0.997	Leading	9.73	0.985	Leading	21.86	0.996	Leading	11.85	0.997	Leading	9.00
169	FLT206-3PH	0.990	Leading	17.59	0.997	Leading	9.70	0.985	Leading	21.92	0.996	Leading	11.78	0.997	Leading	9.01
170	FLT207-3PH	0.990	Leading	17.54	0.997	Leading	9.74	0.985	Leading	21.79	0.996	Leading	11.89	0.998	Leading	8.85
171	FLT208-3PH	0.990	Leading	17.56	0.997	Leading	9.43	0.985	Leading	21.82	0.996	Leading	11.10	0.997	Leading	8.91
172	FLT209-3PH	0.990	Leading	17.48	0.997	Leading	9.74	0.986	Leading	21.43	0.996	Leading	11.31	0.998	Leading	8.01
173	FLT210-3PH	0.990	Leading	17.68	0.997	Leading	9.77	0.985	Leading	21.83	0.996	Leading	11.93	0.998	Leading	8.63
174	FLT211-3PH	0.990	Leading	17.58	0.997	Leading	9.71	0.985	Leading	21.90	0.996	Leading	11.87	0.997	Leading	9.06
175	FLT212-3PH	0.990	Leading	17.55	0.997	Leading	9.74	0.985	Leading	21.85	0.996	Leading	11.90	0.997	Leading	8.97
176	FLT213-3PH	0.990	Leading	17.56	0.997	Leading	9.65	0.985	Leading	21.86	0.995	Leading	12.34	0.997	Leading	9.00
177	FLT214-3PH	0.990	Leading	17.44	0.997	Leading	9.69	0.986	Leading	21.52	0.995	Leading	12.25	0.997	Leading	9.61
178	FLT215-3PH	0.990	Leading	17.48	0.997	Leading	9.66	0.985	Leading	22.09	0.995	Leading	12.34	0.997	Leading	9.50
179	FLT216-3PH	0.991	Leading	17.36	0.997	Leading	9.74	0.985	Leading	22.08	0.996	Leading	11.91	0.997	Leading	9.69
180	FLT217-3PH	0.990	Leading	17.56	0.997	Leading	9.73	0.985	Leading	21.88	0.995	Leading	11.96	0.997	Leading	9.02
181	FLT218-3PH	0.990	Leading	17.55	0.997	Leading	9.74	0.985	Leading	21.88	0.996	Leading	11.91	0.997	Leading	9.04
182	FLT219-3PH	0.990	Leading	17.56	0.999	Leading	5.22	0.985	Leading	21.86	0.999	Leading	6.01	0.997	Leading	9.01
183	FLT220-3PH	0.993	Leading	14.73	0.997	Leading	9.69	0.990	Leading	18.22	0.995	Leading	12.21	0.999	Leading	5.60
184	FLT221-3PH	N/A	N/A	N/A	0.997	Leading	9.73	N/A	N/A	N/A	0.995	Leading	11.98	0.997	Leading	9.51
186	FLT223-3PH	0.990	Leading	17.54	0.997	Leading	9.72	N/A	N/A	N/A	0.995	Leading	11.94	N/A	N/A	N/A
187	FLT224-3PH	0.990	Leading	17.55	0.997	Leading	9.74	N/A	N/A	N/A	0.996	Leading	11.93	N/A	N/A	N/A
188	FLT225-3PH	0.990	Leading	17.56	0.997	Leading	9.69	N/A	N/A	N/A	0.995	Leading	12.21	N/A	N/A	N/A

Study Generator GEN-2014-046

The Power Factor Analysis shows that GEN-2014-046 has a power factor range of 0.986 to 0.998 leading (absorbing) for the 2015 Summer Peak conditions, a power factor range of 0.995 leading (absorbing) to 1.00 (unity) for the 2015 Winter Peak conditions, a power factor range of 0.981 leading (absorbing) to 1.00 (unity) for the 2020 Summer Peak conditions, a power factor range of 0.982 leading (absorbing) to 0.999 leading (absorbing) for the 2020 Winter Peak conditions, and a power factor range of 0.991 leading (absorbing) to 1.00 (unity) for the 2025 Summer Peak conditions.

Table 5-2
Power Factor Analysis: GEN-2014-065

Ref No.	Case	2015 Summer Peak			2015 Winter Peak			2020 Summer Peak			2020 Winter Peak			2025 Summer Peak		
		Power Factor		Q (MVAR)	Power Factor		Q (MVAR)	Power Factor		Q (MVAR)	Power Factor		Q (MVAR)	Power Factor		Q (MVAR)
0	Base	0.999	Leading	4.77	0.995	Leading	10.26	0.980	Lagging	-20.13	0.991	Lagging	-13.68	0.948	Lagging	-33.31
1	FLT01-3PH	0.999	Leading	4.69	0.995	Leading	10.19	0.980	Lagging	-20.14	0.991	Lagging	-13.69	0.948	Lagging	-33.34
2	FLT02-3PH	0.999	Leading	4.65	0.995	Leading	10.16	0.980	Lagging	-20.15	0.991	Lagging	-13.70	0.948	Lagging	-33.35
3	FLT03-3PH	0.999	Leading	4.74	0.995	Leading	10.20	0.980	Lagging	-20.13	0.991	Lagging	-13.68	0.948	Lagging	-33.31
4	FLT04-3PH	0.999	Leading	4.29	0.995	Leading	9.95	0.979	Lagging	-20.36	0.990	Lagging	-13.88	0.947	Lagging	-33.75
5	FLT05-3PH	0.999	Leading	4.41	0.995	Leading	9.81	0.979	Lagging	-20.37	0.990	Lagging	-13.95	0.946	Lagging	-33.98
6	FLT06-3PH	0.999	Leading	4.02	0.996	Leading	8.94	0.987	Lagging	-20.31	0.990	Lagging	-13.96	0.947	Lagging	-33.74
7	FLT07-3PH	0.999	Leading	4.36	0.995	Leading	10.00	0.980	Lagging	-20.33	0.990	Lagging	-13.86	0.947	Lagging	-33.70
8	FLT08-3PH	0.999	Leading	4.81	0.995	Leading	9.81	0.979	Lagging	-20.43	0.990	Lagging	-14.14	0.944	Lagging	-34.52
9	FLT09-3PH	1.000	Leading	2.88	0.995	Leading	9.49	0.979	Lagging	-20.73	0.991	Lagging	-13.56	0.946	Lagging	-33.82
10	FLT10-3PH	1.000	Lagging	-0.32	1.000	Leading	1.56	0.979	Lagging	-20.86	0.990	Lagging	-14.37	0.943	Lagging	-34.99
11	FLT11-3PH	0.999	Leading	4.32	0.995	Leading	10.17	0.980	Lagging	-20.33	0.990	Lagging	-13.76	0.947	Lagging	-33.73
12	FLT12-3PH	1.000	Leading	2.32	0.994	Leading	11.24	0.979	Lagging	-20.68	0.990	Lagging	-14.07	0.945	Lagging	-34.31
13	FLT13-3PH	0.995	Lagging	-9.47	0.996	Leading	8.39	0.974	Lagging	-23.15	0.987	Lagging	-16.16	0.930	Lagging	-39.22
14	FLT14-3PH	0.996	Lagging	-9.31	0.993	Lagging	-11.89	0.974	Lagging	-22.93	0.989	Lagging	-15.14	0.933	Lagging	-38.16
15	FLT15-3PH	1.000	Leading	2.08	0.997	Leading	7.88	0.979	Lagging	-20.73	0.990	Lagging	-14.46	0.943	Lagging	-35.00
16	FLT16-3PH	0.999	Leading	5.21	0.994	Leading	10.80	0.981	Lagging	-19.72	0.990	Lagging	-14.35	0.951	Lagging	-32.32
17	FLT22-3PH	0.998	Leading	6.90	0.993	Leading	11.50	0.981	Lagging	-19.80	0.991	Lagging	-13.57	0.951	Lagging	-32.36
18	FLT23-3PH	0.999	Leading	4.70	0.996	Leading	8.96	0.980	Lagging	-19.97	0.991	Lagging	-13.63	0.948	Lagging	-33.09
19	FLT24-3PH	0.945	Lagging	-34.20	1.000	Leading	1.61	0.951	Lagging	-32.13	0.971	Lagging	-24.56	0.891	Lagging	-50.54
20	FLT25-3PH	0.999	Leading	4.82	0.995	Leading	10.16	0.980	Lagging	-20.07	0.991	Lagging	-13.66	0.948	Lagging	-33.29
21	FLT28-3PH	0.997	Leading	7.86	0.987	Leading	15.89	0.976	Lagging	-22.07	0.987	Lagging	-15.90	0.939	Lagging	-36.42
22	FLT29-3PH	N/A	N/A	N/A	0.997	Leading	7.50	N/A	N/A	N/A	N/A	N/A	N/A	0.947	Lagging	-33.68
23	FLT30-3PH	N/A	N/A	N/A	1.000	Lagging	-2.84	N/A	N/A	N/A	N/A	N/A	N/A	0.897	Lagging	-48.82
24	FLT31-3PH	N/A	N/A	N/A	0.977	Lagging	-21.77	N/A	N/A	N/A	N/A	N/A	N/A	0.830	Lagging	-66.48
25	FLT33-3PH	0.979	Leading	20.65	0.981	Leading	19.47	0.980	Lagging	-20.13	0.991	Lagging	-13.68	0.948	Lagging	-33.31
26	FLT34-3PH	0.998	Leading	5.48	0.993	Leading	11.44	0.995	Lagging	-10.30	0.997	Lagging	-7.90	0.989	Lagging	-14.57
27	FLT35-3PH	0.998	Leading	6.43	0.992	Leading	12.27	1.000	Leading	1.71	0.996	Leading	9.38	0.985	Lagging	-17.31
28	FLT38-3PH	0.999	Leading	4.89	0.995	Leading	10.36	0.980	Lagging	-19.95	0.991	Lagging	-13.65	0.949	Lagging	-33.01
29	FLT42-3PH	0.997	Lagging	-7.80	1.000	Lagging	-0.98	0.954	Lagging	-30.99	0.970	Lagging	-24.85	0.916	Lagging	-43.36
30	FLT45-3PH	1.000	Leading	3.02	0.996	Leading	8.34	0.977	Lagging	-21.48	0.989	Lagging	-14.70	0.941	Lagging	-35.61
31	FLT46-3PH	1.000	Leading	3.11	0.996	Leading	8.95	0.977	Lagging	-21.55	0.990	Lagging	-14.32	0.941	Lagging	-35.65
32	FLT47-3PH	1.000	Leading	2.36	0.997	Leading	8.05	0.975	Lagging	-22.57	0.988	Lagging	-15.63	0.940	Lagging	-36.01
33	FLT48-3PH	0.999	Leading	4.81	0.995	Leading	9.81	0.979	Lagging	-20.43	0.990	Lagging	-14.14	0.944	Lagging	-34.52
34	FLT49-3PH	0.998	Leading	6.91	0.992	Leading	12.57	0.981	Lagging	-19.80	0.991	Lagging	-13.27	0.949	Lagging	-32.72
35	FLT50-3PH	0.999	Leading	3.62	0.995	Leading	9.44	0.979	Lagging	-20.55	0.990	Lagging	-14.05	0.945	Lagging	-34.22
36	FLT51-3PH	0.999	Leading	4.00	0.995	Leading	10.01	0.980	Lagging	-20.29	0.991	Lagging	-13.68	0.948	Lagging	-33.40
38	FLT53-3PH	0.999	Leading	4.69	0.994	Leading	10.63	0.980	Lagging	-20.04	0.991	Lagging	-13.49	0.948	Lagging	-33.13
40	FLT55-3PH	0.999	Leading	3.92	0.995	Leading	9.94	0.980	Lagging	-20.28	0.991	Lagging	-13.67	0.948	Lagging	-33.29
41	FLT56-3PH	0.999	Leading	4.67	0.995	Leading	10.30	0.979	Lagging	-20.36	0.991	Lagging	-13.67	0.947	Lagging	-33.69
42	FLT57-3PH	0.999	Leading	4.66	0.995	Leading	10.29	0.979	Lagging	-20.37	0.991	Lagging	-13.70	0.947	Lagging	-33.72
43	FLT58-3PH	0.999	Leading	4.59	0.995	Leading	9.84	0.980	Lagging	-20.33	0.990	Lagging	-13.81	0.947	Lagging	-33.45
44	FLT59-3PH	0.999	Leading	4.79	0.995	Leading	10.28	0.980	Lagging	-20.04	0.991	Lagging	-13.64	0.948	Lagging	-33.11
47	FLT62-3PH	0.999	Leading	4.77	0.995	Leading	10.26	0.980	Lagging	-20.13	0.991	Lagging	-13.68	0.948	Lagging	-33.31
49	FLT64-3PH	0.999	Leading	4.85	0.995	Leading	10.34	0.980	Lagging	-20.11	0.991	Lagging	-13.66	0.948	Lagging	-33.28
51	FLT67-3PH	0.999	Leading	4.86	0.995	Leading	10.33	0.980	Lagging	-20.10	0.991	Lagging	-13.66	0.948	Lagging	-33.35
55	FLT71-3PH	0.999	Leading	4.75	0.995	Leading	10.25	0.980	Lagging	-20.14	0.991	Lagging	-13.69	0.948	Lagging	-33.32
56	FLT72-3PH	0.999	Leading	4.74	0.995	Leading	10.25	0.980	Lagging	-20.14	0.991	Lagging	-13.69	0.948	Lagging	-33.33
57	FLT73-3PH	0.999	Leading	4.77	0.995	Leading	10.28	0.980	Lagging	-20.12	0.991	Lagging	-13.68	0.948	Lagging	-33.30
58	FLT74-3PH	0.999	Leading	4.77	0.995	Leading	10.26	0.980	Lagging	-20.12	0.991	Lagging	-13.68	0.948	Lagging	-33.30
59	FLT75-3PH	0.999	Leading	4.77	0.995	Leading	10.27	0.980	Lagging	-20.11	0.991	Lagging	-13.67	0.948	Lagging	-33.29
60	FLT76-3PH	0.999	Leading	4.76	0.995	Leading	10.26	0.980	Lagging	-20.13	0.991	Lagging	-13.68	0.948	Lagging	-33.31
61	FLT77-3PH	0.999	Leading	4.67	0.995	Leading	10.23	0.980	Lagging	-20.13	0.991	Lagging	-13.67	0.948	Lagging	-33.30
62	FLT78-3PH	0.999	Leading	4.77	0.995	Leading	10.26	0.980	Lagging	-20.13	0.991	Lagging	-13.68	0.948	Lagging	-33.26
63	FLT79-3PH	0.999	Leading	4.78	0.995	Leading	10.27	0.980	Lagging	-20.12	0.991	Lagging	-13.68	0.948	Lagging	-33.29
64	FLT80-3PH	0.999	Leading	4.71	0.995	Leading	10.20	0.980	Lagging	-20.14	0.991	Lagging	-13.72	0.948	Lagging	-33.29
65	FLT81-3PH	0.999	Leading	4.79	0.995	Leading	10.28	0.980	Lagging	-20.10	0.991	Lagging	-13.67	0.948	Lagging	-33.32
66	FLT82-3PH	0.999	Leading	4.78	0.995	Leading	10.26	0.980	Lagging	-20.11	0.991	Lagging	-13.68	0.948	Lagging	-33.28
67	FLT88-3PH	0.999	Leading	4.74	0.995	Leading	10.23	0.980	Lagging	-20.19	0.990	Lagging	-13.76	0.947	Lagging	-33.41
68	FLT90-3PH	0.999	Leading	5.02	0.994	Leading	10.48	0.980	Lagging	-20.15	0.991	Lagging	-13.71	0.948	Lagging	-33.30
69	FLT91-3PH	0.999	Leading	4.63	0.995	Leading	10.23	0.980	Lagging	-20.15	0.991	Lagging	-13.72	0.948	Lagging	-33.30
70	FLT93-3PH	0.999	Leading	4.77	0.995	Leading	10.26	0.980	Lagging	-20.12	0.991	Lagging	-13.68	0.948	Lagging	-33.30
71	FLT94-3PH	0.999	Leading	4.78	0.995	Leading	10.27	0.980	Lagging	-20.12	0.991	Lagging	-13.68	0.948	Lagging	-33.30
72	FLT95-3PH	0.999	Leading	4.75	0.995	Leading	10.25	0.980	Lagging	-20.14	0.991	Lagging	-13.68	0.947	Lagging	-33.41
73	FLT96-3PH	0.999	Leading	4.77	0.995	Leading	10.26	0.980	Lagging	-20.13	0.991	Lagging	-13.68	0.948	Lagging	-33.31
74	FLT97-3PH	0.999	Leading	4.73	0.995	Leading	10.22	0.980	Lagging	-20.15	0.991	Lagging	-13.70	0.948	Lagging	-33.38

Table 5-2 (Continued)
Power Factor Analysis: GEN-2014-065

Ref No.	Case	2015 Summer Peak			2015 Winter Peak			2020 Summer Peak			2020 Winter Peak			2025 Summer Peak		
		Power Factor		Q (MVAR)	Power Factor		Q (MVAR)	Power Factor		Q (MVAR)	Power Factor		Q (MVAR)	Power Factor		Q (MVAR)
76	FLT99-3PH	0.999	Leading	4.71	0.995	Leading	10.21	0.980	Lagging	-20.12	0.991	Lagging	-13.67	0.948	Lagging	-33.28
77	FLT100-3PH	0.999	Leading	4.77	0.995	Leading	10.26	0.980	Lagging	-20.12	0.991	Lagging	-13.68	0.948	Lagging	-33.31
78	FLT101-3PH	0.999	Leading	4.77	0.995	Leading	10.26	0.980	Lagging	-20.13	0.991	Lagging	-13.68	0.948	Lagging	-33.31
79	FLT102-3PH	0.999	Leading	4.77	0.995	Leading	10.26	0.980	Lagging	-20.12	0.991	Lagging	-13.68	0.948	Lagging	-33.31
80	FLT103-3PH	0.999	Leading	4.78	0.995	Leading	10.26	0.980	Lagging	-20.12	0.991	Lagging	-13.68	0.948	Lagging	-33.30
81	FLT104-3PH	0.999	Leading	4.77	0.995	Leading	10.26	0.980	Lagging	-20.13	0.991	Lagging	-13.68	0.948	Lagging	-33.31
82	FLT105-3PH	0.999	Leading	4.78	0.995	Leading	10.26	0.980	Lagging	-20.12	0.991	Lagging	-13.68	0.948	Lagging	-33.31
83	FLT106-3PH	0.999	Leading	4.79	0.995	Leading	10.28	0.980	Lagging	-20.12	0.991	Lagging	-13.67	0.948	Lagging	-33.30
84	FLT107-3PH	0.999	Leading	4.77	0.995	Leading	10.26	0.980	Lagging	-20.12	0.991	Lagging	-13.68	0.948	Lagging	-33.31
85	FLT108-3PH	0.999	Leading	4.77	0.995	Leading	10.27	0.980	Lagging	-20.12	0.991	Lagging	-13.68	0.948	Lagging	-33.31
87	FLT116-3PH	0.999	Leading	4.72	0.995	Leading	10.21	0.980	Lagging	-20.07	0.991	Lagging	-13.58	0.948	Lagging	-33.26
88	FLT117-3PH	N/A	N/A	N/A	N/A	N/A	N/A	0.981	Lagging	-19.83	0.991	Lagging	-13.50	0.947	Lagging	-33.72
89	FLT122-3PH	0.999	Leading	4.76	0.995	Leading	10.26	0.980	Lagging	-20.13	0.991	Lagging	-13.68	0.948	Lagging	-33.31
90	FLT123-3PH	0.998	Leading	5.56	0.994	Leading	10.98	0.980	Lagging	-20.08	0.991	Lagging	-13.63	0.948	Lagging	-33.31
91	FLT125-3PH	0.999	Leading	5.04	0.994	Leading	11.08	0.980	Lagging	-20.22	0.990	Lagging	-13.76	0.947	Lagging	-33.49
92	FLT126-3PH	0.999	Leading	4.81	0.995	Leading	10.23	0.980	Lagging	-20.12	0.991	Lagging	-13.69	0.948	Lagging	-33.29
93	FLT129-3PH	N/A	N/A	N/A	N/A	N/A	N/A	0.980	Lagging	-20.18	0.991	Lagging	-13.67	0.947	Lagging	-33.44
94	FLT130-3PH	0.999	Leading	4.75	0.995	Leading	10.24	N/A	N/A	N/A	N/A	N/A	N/A	N/A	N/A	N/A
95	FLT132-3PH	0.999	Leading	4.63	0.995	Leading	10.20	0.980	Lagging	-20.16	0.991	Lagging	-13.69	0.948	Lagging	-33.33
96	FLT133-3PH	0.999	Leading	4.58	0.995	Leading	10.17	0.980	Lagging	-20.18	0.991	Lagging	-13.70	0.948	Lagging	-33.33
97	FLT134-3PH	0.999	Leading	4.64	0.995	Leading	10.21	0.980	Lagging	-20.15	0.991	Lagging	-13.68	0.948	Lagging	-33.32
98	FLT135-3PH	0.999	Leading	4.76	0.995	Leading	10.26	0.980	Lagging	-20.14	0.991	Lagging	-13.68	0.948	Lagging	-33.33
99	FLT136-3PH	0.999	Leading	4.77	0.995	Leading	10.26	0.980	Lagging	-20.13	0.991	Lagging	-13.68	0.948	Lagging	-33.32
100	FLT137-3PH	0.999	Leading	4.77	0.995	Leading	10.26	0.980	Lagging	-20.13	0.991	Lagging	-13.68	0.948	Lagging	-33.30
101	FLT138-3PH	0.999	Leading	4.75	0.995	Leading	10.25	0.980	Lagging	-20.14	0.991	Lagging	-13.69	0.948	Lagging	-33.34
102	FLT139-3PH	0.999	Leading	4.77	0.995	Leading	10.26	0.980	Lagging	-20.13	0.991	Lagging	-13.68	0.948	Lagging	-33.31
103	FLT140-3PH	0.999	Leading	4.53	0.995	Leading	10.14	0.980	Lagging	-20.18	0.991	Lagging	-13.66	0.948	Lagging	-33.35
104	FLT141-3PH	0.999	Leading	4.78	0.995	Leading	10.27	0.980	Lagging	-20.09	0.991	Lagging	-13.65	0.948	Lagging	-33.31
105	FLT142-3PH	0.999	Leading	4.57	0.995	Leading	10.10	0.980	Lagging	-20.15	0.991	Lagging	-13.68	0.948	Lagging	-33.38
106	FLT143-3PH	0.999	Leading	4.55	0.995	Leading	10.10	0.980	Lagging	-20.21	0.991	Lagging	-13.70	0.947	Lagging	-33.43
107	FLT144-3PH	0.999	Leading	4.77	0.995	Leading	10.30	0.980	Lagging	-20.10	0.991	Lagging	-13.62	0.948	Lagging	-33.25
108	FLT145-3PH	0.999	Leading	4.73	0.995	Leading	10.25	0.980	Lagging	-20.14	0.991	Lagging	-13.68	0.948	Lagging	-33.33
109	FLT146-3PH	0.999	Leading	4.55	0.995	Leading	10.17	0.980	Lagging	-20.28	0.991	Lagging	-13.70	0.947	Lagging	-33.44
110	FLT147-3PH	0.999	Leading	4.74	0.995	Leading	10.26	0.980	Lagging	-20.13	0.991	Lagging	-13.66	0.948	Lagging	-33.30
111	FLT148-3PH	0.999	Leading	4.77	0.995	Leading	10.26	0.980	Lagging	-20.13	0.991	Lagging	-13.68	0.948	Lagging	-33.32
112	FLT148-3PH	0.999	Leading	4.78	0.995	Leading	10.27	0.980	Lagging	-20.12	0.991	Lagging	-13.68	0.948	Lagging	-33.31
113	FLT150-3PH	0.999	Leading	4.78	0.995	Leading	10.28	0.980	Lagging	-20.12	0.991	Lagging	-13.68	0.948	Lagging	-33.30
114	FLT151-3PH	0.999	Leading	4.78	0.995	Leading	10.27	0.980	Lagging	-20.12	0.991	Lagging	-13.68	0.948	Lagging	-33.30
115	FLT152-3PH	0.999	Leading	4.77	0.995	Leading	10.26	0.980	Lagging	-20.13	0.991	Lagging	-13.68	0.948	Lagging	-33.31
116	FLT153-3PH	0.999	Leading	4.77	0.995	Leading	10.26	0.980	Lagging	-20.13	0.991	Lagging	-13.68	0.948	Lagging	-33.31
117	FLT154-3PH	0.999	Leading	4.77	0.995	Leading	10.26	0.980	Lagging	-20.12	0.991	Lagging	-13.68	0.948	Lagging	-33.31
118	FLT155-3PH	0.999	Leading	4.84	0.995	Leading	10.30	0.980	Lagging	-20.12	0.991	Lagging	-13.67	0.948	Lagging	-33.29
119	FLT156-3PH	0.999	Leading	4.78	0.995	Leading	10.27	0.980	Lagging	-20.12	0.991	Lagging	-13.68	0.948	Lagging	-33.31
120	FLT157-3PH	0.999	Leading	4.77	0.995	Leading	10.26	0.980	Lagging	-20.12	0.991	Lagging	-13.68	0.948	Lagging	-33.31
121	FLT158-3PH	0.999	Leading	4.77	0.995	Leading	10.26	0.980	Lagging	-20.12	0.991	Lagging	-13.68	0.948	Lagging	-33.31
122	FLT159-3PH	0.999	Leading	4.78	0.995	Leading	10.27	0.980	Lagging	-20.12	0.991	Lagging	-13.68	0.948	Lagging	-33.31
123	FLT160-3PH	0.999	Leading	4.78	0.995	Leading	10.26	0.980	Lagging	-20.12	0.991	Lagging	-13.68	0.948	Lagging	-33.31
124	FLT161-3PH	0.999	Leading	4.77	0.995	Leading	10.26	0.980	Lagging	-20.13	0.991	Lagging	-13.68	0.948	Lagging	-33.31
125	FLT162-3PH	0.999	Leading	4.85	0.995	Leading	10.31	0.980	Lagging	-20.10	0.991	Lagging	-13.66	0.948	Lagging	-33.27
126	FLT163-3PH	0.999	Leading	4.77	0.995	Leading	10.30	0.980	Lagging	-20.13	0.991	Lagging	-13.68	0.948	Lagging	-33.32
127	FLT164-3PH	0.999	Leading	4.77	0.995	Leading	10.29	0.980	Lagging	-20.13	0.991	Lagging	-13.68	0.948	Lagging	-33.32
128	FLT165-3PH	0.998	Leading	5.46	0.994	Leading	10.81	0.980	Lagging	-19.99	0.991	Lagging	-13.59	0.948	Lagging	-33.23
129	FLT166-3PH	0.999	Leading	4.84	0.995	Leading	10.32	0.980	Lagging	-20.11	0.991	Lagging	-13.67	0.948	Lagging	-33.31
130	FLT167-3PH	0.999	Leading	4.77	0.995	Leading	10.26	0.980	Lagging	-20.13	0.991	Lagging	-13.68	0.948	Lagging	-33.31
131	FLT168-3PH	0.999	Leading	4.77	0.995	Leading	10.26	0.980	Lagging	-20.13	0.991	Lagging	-13.68	0.948	Lagging	-33.31
132	FLT169-3PH	0.999	Leading	4.77	0.995	Leading	10.26	0.980	Lagging	-20.13	0.991	Lagging	-13.68	0.948	Lagging	-33.31
133	FLT170-3PH	0.999	Leading	4.71	0.995	Leading	10.22	0.980	Lagging	-20.16	0.991	Lagging	-13.70	0.948	Lagging	-33.38
134	FLT171-3PH	0.999	Leading	4.77	0.995	Leading	10.26	0.980	Lagging	-20.13	0.991	Lagging	-13.68	0.948	Lagging	-33.31
135	FLT172-3PH	0.999	Leading	4.85	0.995	Leading	10.34	0.980	Lagging	-20.11	0.991	Lagging	-13.66	0.948	Lagging	-33.29
136	FLT173-3PH	0.999	Leading	4.77	0.995	Leading	10.26	0.980	Lagging	-20.13	0.991	Lagging	-13.68	0.948	Lagging	-33.31
137	FLT174-3PH	0.999	Leading	4.77	0.995	Leading	10.26	0.980	Lagging	-20.12	0.991	Lagging	-13.68	0.948	Lagging	-33.29
138	FLT175-3PH	0.999	Leading	4.77	0.995	Leading	10.26	0.980	Lagging	-20.12	0.991	Lagging	-13.68	0.948	Lagging	-33.29
139	FLT176-3PH	0.999	Leading	4.75	0.995	Leading	10.24	0.980	Lagging	-20.14	0.991	Lagging	-13.69	0.948	Lagging	-33.32
140	FLT177-3PH	0.999	Leading	4.78	0.995	Leading	10.27	0.980	Lagging	-20.12	0.991	Lagging	-13.68	0.948	Lagging	-33.31
141	FLT178-3PH	0.999	Leading	4.77	0.995	Leading	10.26	0.980	Lagging	-20.13	0.991	Lagging	-13.68	0.948	Lagging	-33.31
142	FLT179-3PH	0.999	Leading	4.78	0.995	Leading	10.27	0.980	Lagging	-20.13	0.991	Lagging	-13.68	0.948	Lagging	-33.32

Table 5-2 (Continued)
Power Factor Analysis: GEN-2014-065

Ref No.	Case	2015 Summer Peak			2015 Winter Peak			2020 Summer Peak			2020 Winter Peak			2025 Summer Peak		
		Power Factor		Q (MVAR)	Power Factor		Q (MVAR)	Power Factor		Q (MVAR)	Power Factor		Q (MVAR)	Power Factor		Q (MVAR)
143	FLT180-3PH	0.999	Leading	4.77	0.995	Leading	10.26	0.980	Lagging	-20.13	0.991	Lagging	-13.68	0.948	Lagging	-33.31
144	FLT181-3PH	0.999	Leading	4.77	0.995	Leading	10.26	0.980	Lagging	-20.13	0.991	Lagging	-13.68	0.948	Lagging	-33.31
145	FLT182-3PH	0.999	Leading	4.78	0.995	Leading	10.27	0.980	Lagging	-20.13	0.991	Lagging	-13.68	0.948	Lagging	-33.32
146	FLT183-3PH	0.999	Leading	4.77	0.995	Leading	10.26	0.980	Lagging	-20.13	0.991	Lagging	-13.68	0.948	Lagging	-33.32
147	FLT184-3PH	0.999	Leading	4.76	0.995	Leading	10.25	0.980	Lagging	-20.13	0.991	Lagging	-13.68	0.948	Lagging	-33.33
148	FLT185-3PH	0.999	Leading	4.77	0.995	Leading	10.26	0.980	Lagging	-20.12	0.991	Lagging	-13.68	0.948	Lagging	-33.31
149	FLT186-3PH	0.999	Leading	4.78	0.995	Leading	10.26	0.980	Lagging	-20.13	0.991	Lagging	-13.68	0.948	Lagging	-33.31
150	FLT187-3PH	0.999	Leading	4.78	0.995	Leading	10.27	0.980	Lagging	-20.13	0.991	Lagging	-13.68	0.948	Lagging	-33.31
151	FLT188-3PH	0.999	Leading	4.77	0.995	Leading	10.26	0.980	Lagging	-20.13	0.991	Lagging	-13.68	0.948	Lagging	-33.31
152	FLT189-3PH	0.999	Leading	4.77	0.995	Leading	10.26	0.980	Lagging	-20.13	0.991	Lagging	-13.68	0.948	Lagging	-33.31
153	FLT190-3PH	0.999	Leading	4.77	0.995	Leading	10.26	0.980	Lagging	-20.13	0.991	Lagging	-13.68	0.948	Lagging	-33.31
154	FLT191-3PH	0.999	Leading	4.77	0.995	Leading	10.26	0.980	Lagging	-20.13	0.991	Lagging	-13.68	0.948	Lagging	-33.31
155	FLT192-3PH	0.999	Leading	4.77	0.995	Leading	10.27	0.980	Lagging	-20.12	0.991	Lagging	-13.68	0.948	Lagging	-33.30
156	FLT193-3PH	0.999	Leading	4.77	0.995	Leading	10.26	0.980	Lagging	-20.13	0.991	Lagging	-13.68	0.948	Lagging	-33.31
157	FLT194-3PH	0.999	Leading	4.77	0.995	Leading	10.26	0.980	Lagging	-20.12	0.991	Lagging	-13.68	0.948	Lagging	-33.31
158	FLT195-3PH	0.999	Leading	4.73	0.995	Leading	10.22	0.980	Lagging	-20.15	0.991	Lagging	-13.70	0.948	Lagging	-33.38
159	FLT196-3PH	0.999	Leading	4.80	0.995	Leading	10.29	0.980	Lagging	-20.13	0.991	Lagging	-13.69	0.948	Lagging	-33.30
160	FLT197-3PH	0.999	Leading	4.76	0.995	Leading	10.29	0.980	Lagging	-20.12	0.991	Lagging	-13.68	0.948	Lagging	-33.28
161	FLT198-3PH	0.999	Leading	4.80	0.995	Leading	10.35	0.980	Lagging	-20.08	0.991	Lagging	-13.61	0.948	Lagging	-33.28
162	FLT199-3PH	0.999	Leading	4.52	0.995	Leading	10.01	0.980	Leading	-20.33	0.990	Lagging	-13.85	0.946	Lagging	-33.92
163	FLT200-3PH	0.999	Leading	4.79	0.995	Leading	10.34	0.980	Lagging	-20.09	0.991	Lagging	-13.61	0.948	Lagging	-33.28
164	FLT201-3PH	0.999	Leading	4.69	0.995	Leading	10.29	0.980	Lagging	-20.16	0.991	Lagging	-13.63	0.948	Lagging	-33.31
165	FLT202-3PH	0.999	Leading	4.78	0.995	Leading	10.34	0.980	Lagging	-20.09	0.991	Lagging	-13.61	0.948	Lagging	-33.28
166	FLT203-3PH	0.999	Leading	4.65	0.995	Leading	10.18	0.980	Lagging	-20.22	0.991	Lagging	-13.73	0.948	Lagging	-33.31
167	FLT204-3PH	0.999	Leading	4.61	0.995	Leading	10.06	0.980	Lagging	-20.20	0.991	Lagging	-13.72	0.948	Lagging	-33.38
168	FLT205-3PH	0.999	Leading	4.77	0.995	Leading	10.26	0.980	Lagging	-20.13	0.991	Lagging	-13.68	0.948	Lagging	-33.32
169	FLT206-3PH	0.999	Leading	4.69	0.995	Leading	10.27	0.980	Lagging	-20.15	0.991	Lagging	-13.66	0.948	Lagging	-33.23
170	FLT207-3PH	0.999	Leading	4.81	0.995	Leading	10.33	0.980	Lagging	-20.05	0.991	Lagging	-13.60	0.948	Lagging	-33.21
171	FLT208-3PH	0.999	Leading	4.75	0.995	Leading	10.23	0.980	Lagging	-20.09	0.991	Lagging	-13.65	0.948	Lagging	-33.29
172	FLT209-3PH	0.999	Leading	4.92	0.994	Leading	10.57	0.980	Lagging	-20.03	0.991	Lagging	-13.56	0.948	Lagging	-33.23
173	FLT210-3PH	0.999	Leading	4.35	0.995	Leading	10.26	0.980	Lagging	-20.17	0.991	Lagging	-13.63	0.948	Lagging	-33.35
174	FLT211-3PH	0.999	Leading	4.71	0.995	Leading	10.23	0.980	Lagging	-20.14	0.991	Lagging	-13.68	0.948	Lagging	-33.30
175	FLT212-3PH	0.999	Leading	4.79	0.995	Leading	10.32	0.980	Lagging	-20.05	0.991	Lagging	-13.57	0.949	Lagging	-33.04
176	FLT213-3PH	0.999	Leading	4.79	0.995	Leading	10.28	0.980	Lagging	-20.08	0.991	Lagging	-13.66	0.948	Lagging	-33.22
177	FLT214-3PH	0.999	Leading	4.54	0.995	Leading	10.01	0.980	Lagging	-20.32	0.991	Lagging	-13.69	0.947	Lagging	-33.44
178	FLT215-3PH	0.999	Leading	4.60	0.995	Leading	10.07	0.980	Lagging	-20.07	0.991	Lagging	-13.67	0.948	Lagging	-33.29
179	FLT216-3PH	0.999	Leading	4.46	0.995	Leading	10.02	0.980	Lagging	-20.10	0.991	Lagging	-13.68	0.947	Lagging	-33.72
180	FLT217-3PH	0.999	Leading	4.77	0.995	Leading	10.26	0.980	Lagging	-20.12	0.991	Lagging	-13.68	0.948	Lagging	-33.29
181	FLT218-3PH	0.999	Leading	4.74	0.995	Leading	10.23	0.980	Lagging	-20.12	0.991	Lagging	-13.67	0.948	Lagging	-33.28
182	FLT219-3PH	0.999	Leading	4.77	0.995	Leading	10.26	0.980	Lagging	-20.13	0.991	Lagging	-13.68	0.948	Lagging	-33.30
183	FLT220-3PH	0.999	Leading	4.91	0.995	Leading	10.40	0.980	Lagging	-20.08	0.991	Lagging	-13.64	0.948	Lagging	-33.25
184	FLT221-3PH	N/A	N/A	N/A	0.995	Leading	10.09	N/A	N/A	N/A	0.991	Lagging	-13.70	0.947	Lagging	-33.47
186	FLT223-3PH	0.999	Leading	4.73	0.995	Leading	10.22	N/A	N/A	N/A	0.991	Lagging	-13.67	N/A	N/A	N/A
187	FLT224-3PH	0.999	Leading	4.74	0.995	Leading	10.23	N/A	N/A	N/A	0.991	Lagging	-13.69	N/A	N/A	N/A
188	FLT225-3PH	0.999	Leading	4.76	0.995	Leading	10.26	N/A	N/A	N/A	0.991	Lagging	-13.68	N/A	N/A	N/A

Study Generator GEN-2014-065

The Power Factor Analysis shows that GEN-2014-065 has a power factor range of 0.945 lagging (supplying) to 0.979 leading (absorbing) for the 2015 Summer Peak conditions, a power factor range of 0.977 lagging (supplying) to 0.981 leading (absorbing) for the 2015 Winter Peak conditions, a power factor range of 0.951 lagging (supplying) to 1.00 (unity) for the 2020 Summer Peak conditions, a power factor range of 0.970 lagging (supplying) to 0.996 leading (absorbing) for the 2020 Winter Peak conditions, and a power factor range of 0.830 to 0.989 lagging (supplying) for the 2025 Summer Peak conditions.

Table 5-3
Power Factor Analysis: GEN-2014-074

Ref No.	Case	2015 Summer Peak			2015 Winter Peak			2020 Summer Peak			2020 Winter Peak			2025 Summer Peak		
		Power Factor		Q (MVAR)	Power Factor		Q (MVAR)	Power Factor		Q (MVAR)	Power Factor		Q (MVAR)	Power Factor		Q (MVAR)
0	Base	0.604	Lagging	-200.39	0.564	Lagging	-222.57	0.578	Lagging	-214.36	0.620	Lagging	-192.58	0.752	Lagging	-133.03
1	FLT01-3PH	0.604	Lagging	-200.43	0.564	Lagging	-222.60	0.578	Lagging	-214.42	0.620	Lagging	-192.57	0.752	Lagging	-133.18
2	FLT02-3PH	0.604	Lagging	-200.54	0.564	Lagging	-222.67	0.578	Lagging	-214.54	0.620	Lagging	-192.59	0.752	Lagging	-133.28
3	FLT03-3PH	0.604	Lagging	-200.54	0.564	Lagging	-222.70	0.578	Lagging	-214.59	0.620	Lagging	-192.59	0.752	Lagging	-133.17
4	FLT04-3PH	0.604	Lagging	-200.48	0.564	Lagging	-222.57	0.578	Lagging	-214.37	0.619	Lagging	-192.84	0.752	Lagging	-133.22
5	FLT05-3PH	0.604	Lagging	-200.36	0.564	Lagging	-222.57	0.582	Lagging	-212.40	0.622	Lagging	-191.29	0.755	Lagging	-132.04
6	FLT06-3PH	0.607	Lagging	-199.17	0.567	Lagging	-220.70	0.583	Lagging	-211.74	0.625	Lagging	-189.82	0.757	Lagging	-131.18
7	FLT07-3PH	0.604	Lagging	-200.46	0.564	Lagging	-222.56	0.578	Lagging	-214.36	0.619	Lagging	-192.68	0.752	Lagging	-133.19
8	FLT08-3PH	0.605	Lagging	-200.29	0.566	Lagging	-221.53	0.588	Lagging	-208.92	0.631	Lagging	-186.94	0.769	Lagging	-126.50
9	FLT09-3PH	0.603	Lagging	-201.03	0.563	Lagging	-222.89	0.576	Lagging	-215.64	0.620	Lagging	-192.31	0.751	Lagging	-133.69
10	FLT10-3PH	0.602	Lagging	-201.39	0.563	Lagging	-222.93	0.580	Lagging	-213.58	0.622	Lagging	-191.31	0.753	Lagging	-132.80
11	FLT11-3PH	0.604	Lagging	-200.63	0.563	Lagging	-223.06	0.577	Lagging	-214.99	0.620	Lagging	-192.50	0.749	Lagging	-134.32
12	FLT12-3PH	0.602	Lagging	-201.48	0.563	Lagging	-223.41	0.579	Lagging	-214.11	0.620	Lagging	-192.48	0.752	Lagging	-133.06
13	FLT13-3PH	0.602	Lagging	-201.44	0.564	Lagging	-222.55	0.577	Lagging	-215.24	0.619	Lagging	-192.97	0.748	Lagging	-134.67
14	FLT14-3PH	0.602	Lagging	-201.88	0.562	Lagging	-223.66	0.578	Lagging	-214.68	0.619	Lagging	-192.61	0.749	Lagging	-134.46
15	FLT15-3PH	0.603	Lagging	-200.92	0.563	Lagging	-222.97	0.575	Lagging	-216.01	0.617	Lagging	-193.71	0.747	Lagging	-135.46
16	FLT16-3PH	0.604	Lagging	-200.34	0.564	Lagging	-222.55	0.578	Lagging	-214.42	0.619	Lagging	-192.66	0.752	Lagging	-133.10
17	FLT22-3PH	0.604	Lagging	-200.31	0.564	Lagging	-222.56	0.578	Lagging	-214.59	0.619	Lagging	-192.71	0.752	Lagging	-133.13
18	FLT23-3PH	0.604	Lagging	-200.40	0.564	Lagging	-222.66	0.578	Lagging	-214.53	0.620	Lagging	-192.55	0.752	Lagging	-133.04
19	FLT24-3PH	0.603	Lagging	-201.14	0.564	Lagging	-222.70	0.578	Lagging	-214.85	0.619	Lagging	-193.00	0.750	Lagging	-134.14
20	FLT25-3PH	0.604	Lagging	-200.58	0.564	Lagging	-222.70	0.578	Lagging	-214.61	0.619	Lagging	-192.68	0.752	Lagging	-133.35
21	FLT28-3PH	0.604	Lagging	-200.37	0.564	Lagging	-222.62	0.576	Lagging	-215.47	0.618	Lagging	-193.57	0.749	Lagging	-134.58
22	FLT29-3PH	N/A	N/A	N/A	0.564	Lagging	-222.45	N/A	N/A	N/A	N/A	N/A	N/A	0.750	Lagging	-134.12
23	FLT30-3PH	N/A	N/A	N/A	0.565	Lagging	-221.91	N/A	N/A	N/A	N/A	N/A	N/A	0.749	Lagging	-134.46
24	FLT31-3PH	N/A	N/A	N/A	0.562	Lagging	-223.59	N/A	N/A	N/A	N/A	N/A	N/A	0.770	Lagging	-125.90
25	FLT33-3PH	0.605	Lagging	-200.22	0.564	Lagging	-222.36	0.578	Lagging	-214.36	0.620	Lagging	-192.58	0.752	Lagging	-133.03
26	FLT34-3PH	0.604	Lagging	-200.40	0.564	Lagging	-222.55	0.578	Lagging	-214.69	0.619	Lagging	-192.81	0.751	Lagging	-133.57
27	FLT35-3PH	0.604	Lagging	-200.35	0.564	Lagging	-222.52	0.578	Lagging	-214.68	0.619	Lagging	-192.99	0.752	Lagging	-133.32
28	FLT38-3PH	0.604	Lagging	-200.38	0.564	Lagging	-222.57	0.578	Lagging	-214.50	0.619	Lagging	-192.61	0.752	Lagging	-133.05
29	FLT42-3PH	0.604	Lagging	-200.63	0.564	Lagging	-222.81	0.577	Lagging	-215.10	0.618	Lagging	-193.17	0.749	Lagging	-134.34
30	FLT45-3PH	0.604	Lagging	-200.65	0.563	Lagging	-222.90	0.577	Lagging	-214.94	0.619	Lagging	-192.94	0.750	Lagging	-133.87
31	FLT46-3PH	0.603	Lagging	-201.08	0.563	Lagging	-223.00	0.576	Lagging	-215.76	0.618	Lagging	-193.51	0.749	Lagging	-134.61
32	FLT47-3PH	0.604	Lagging	-200.56	0.564	Lagging	-222.72	0.578	Lagging	-214.80	0.619	Lagging	-193.08	0.751	Lagging	-133.50
33	FLT48-3PH	0.604	Lagging	-200.58	0.565	Lagging	-221.80	0.588	Lagging	-209.22	0.630	Lagging	-187.18	0.768	Lagging	-126.72
34	FLT49-3PH	0.595	Lagging	-205.35	0.557	Lagging	-226.93	0.556	Lagging	-227.22	0.610	Lagging	-197.53	0.743	Lagging	-136.99
35	FLT50-3PH	0.572	Lagging	-218.02	0.539	Lagging	-237.68	0.534	Lagging	-240.39	0.586	Lagging	-210.15	0.706	Lagging	-152.44
36	FLT51-3PH	0.602	Lagging	-201.62	0.563	Lagging	-223.20	0.573	Lagging	-217.40	0.619	Lagging	-192.75	0.751	Lagging	-133.56
38	FLT53-3PH	0.603	Lagging	-201.00	0.565	Lagging	-222.03	0.581	Lagging	-212.72	0.624	Lagging	-190.25	0.757	Lagging	-131.04
40	FLT55-3PH	0.610	Lagging	-197.41	0.565	Lagging	-221.99	0.575	Lagging	-216.14	0.619	Lagging	-192.93	0.751	Lagging	-133.54
41	FLT56-3PH	0.604	Lagging	-200.43	0.564	Lagging	-222.56	0.578	Lagging	-214.77	0.619	Lagging	-192.80	0.751	Lagging	-133.69
42	FLT57-3PH	0.604	Lagging	-200.48	0.564	Lagging	-222.63	0.577	Lagging	-214.93	0.619	Lagging	-192.92	0.751	Lagging	-133.83
43	FLT58-3PH	0.607	Lagging	-199.02	0.568	Lagging	-220.33	0.576	Lagging	-215.50	0.618	Lagging	-193.55	0.748	Lagging	-134.94
44	FLT59-3PH	0.603	Lagging	-200.90	0.564	Lagging	-222.72	0.577	Lagging	-214.91	0.619	Lagging	-192.65	0.751	Lagging	-133.47
47	FLT62-3PH	0.604	Lagging	-200.39	0.564	Lagging	-222.57	0.578	Lagging	-214.36	0.620	Lagging	-192.58	0.752	Lagging	-133.03
49	FLT64-3PH	0.602	Lagging	-201.77	0.562	Lagging	-223.93	0.576	Lagging	-215.46	0.619	Lagging	-192.87	0.751	Lagging	-133.55
51	FLT67-3PH	0.604	Lagging	-200.59	0.564	Lagging	-222.73	0.577	Lagging	-215.39	0.620	Lagging	-192.30	0.750	Lagging	-134.09
55	FLT71-3PH	0.603	Lagging	-201.04	0.564	Lagging	-222.50	0.577	Lagging	-214.99	0.619	Lagging	-192.90	0.749	Lagging	-134.49
56	FLT72-3PH	0.602	Lagging	-201.77	0.563	Lagging	-222.87	0.576	Lagging	-215.82	0.618	Lagging	-193.40	0.746	Lagging	-135.52
57	FLT73-3PH	0.611	Lagging	-197.11	0.570	Lagging	-219.05	0.579	Lagging	-214.29	0.622	Lagging	-191.54	0.755	Lagging	-132.08
58	FLT74-3PH	0.605	Lagging	-199.91	0.564	Lagging	-222.37	0.578	Lagging	-214.52	0.619	Lagging	-192.94	0.753	Lagging	-132.97
59	FLT75-3PH	0.608	Lagging	-198.38	0.567	Lagging	-220.60	0.580	Lagging	-213.55	0.621	Lagging	-191.96	0.754	Lagging	-132.56
60	FLT76-3PH	0.610	Lagging	-197.42	0.569	Lagging	-219.66	0.580	Lagging	-213.58	0.617	Lagging	-194.01	0.752	Lagging	-133.22
61	FLT77-3PH	0.615	Lagging	-194.96	0.567	Lagging	-220.75	0.579	Lagging	-214.09	0.620	Lagging	-192.30	0.753	Lagging	-132.77
62	FLT78-3PH	0.615	Lagging	-194.69	0.571	Lagging	-218.60	0.581	Lagging	-212.76	0.619	Lagging	-192.63	0.759	Lagging	-130.40
63	FLT79-3PH	0.607	Lagging	-199.05	0.565	Lagging	-221.92	0.581	Lagging	-213.00	0.621	Lagging	-191.73	0.757	Lagging	-131.19
64	FLT80-3PH	0.599	Lagging	-202.97	0.560	Lagging	-225.17	0.578	Lagging	-214.68	0.622	Lagging	-191.42	0.761	Lagging	-129.41
65	FLT81-3PH	0.608	Lagging	-198.72	0.568	Lagging	-220.12	0.575	Lagging	-216.30	0.618	Lagging	-193.46	0.746	Lagging	-135.78
66	FLT82-3PH	0.611	Lagging	-197.16	0.569	Lagging	-219.81	0.580	Lagging	-213.39	0.621	Lagging	-191.70	0.754	Lagging	-132.27
67	FLT88-3PH	0.599	Lagging	-203.25	0.561	Lagging	-224.15	0.568	Lagging	-219.97	0.604	Lagging	-200.57	0.746	Lagging	-135.77
68	FLT90-3PH	0.656	Lagging	-174.79	0.598	Lagging	-203.90	0.602	Lagging	-201.68	0.641	Lagging	-181.87	0.784	Lagging	-120.52
69	FLT91-3PH	0.612	Lagging	-196.38	0.564	Lagging	-222.60	0.578	Lagging	-214.80	0.621	Lagging	-191.86	0.764	Lagging	-128.43
70	FLT93-3PH	0.603	Lagging	-201.09	0.561	Lagging	-224.31	0.579	Lagging	-214.18	0.620	Lagging	-192.57	0.753	Lagging	-132.88
71	FLT94-3PH	0.604	Lagging	-200.59	0.564	Lagging	-222.35	0.578	Lagging	-214.48	0.619	Lagging	-193.07	0.752	Lagging	-133.10
72	FLT95-3PH	0.596	Lagging	-204.74	0.558	Lagging	-226.21	0.569	Lagging	-219.53	0.617	Lagging	-193.78	0.727	Lagging	-143.62
73	FLT96-3PH	0.604	Lagging	-200.39	0.564	Lagging	-222.57	0.578	Lagging	-214.36	0.620	Lagging	-192.58	0.752	Lagging	-133.03
74	FLT97-3PH	0.580	Lagging	-213.58	0.547	Lagging	-232.82	0.542	Lagging	-235.89	0.598	Lagging	-203.98	0.723	Lagging	-145.04

Table 5-3 (Continued)
Power Factor Analysis: GEN-2014-074

Ref No.	Case	2015 Summer Peak			2015 Winter Peak			2020 Summer Peak			2020 Winter Peak			2025 Summer Peak		
		Power Factor		Q (MVAR)	Power Factor		Q (MVAR)	Power Factor		Q (MVAR)	Power Factor		Q (MVAR)	Power Factor		Q (MVAR)
76	FLT99-3PH	0.631	Lagging	-186.78	0.591	Lagging	-207.73	0.606	Lagging	-199.56	0.648	Lagging	-178.46	0.781	Lagging	-121.44
77	FLT100-3PH	0.604	Lagging	-200.37	0.564	Lagging	-222.70	0.578	Lagging	-214.36	0.620	Lagging	-192.55	0.752	Lagging	-133.03
78	FLT101-3PH	0.604	Lagging	-200.51	0.564	Lagging	-222.64	0.578	Lagging	-214.51	0.619	Lagging	-192.66	0.752	Lagging	-133.21
79	FLT102-3PH	0.604	Lagging	-200.37	0.564	Lagging	-222.70	0.578	Lagging	-214.36	0.620	Lagging	-192.55	0.752	Lagging	-133.03
80	FLT103-3PH	0.604	Lagging	-200.35	0.564	Lagging	-222.41	0.578	Lagging	-214.34	0.620	Lagging	-192.43	0.752	Lagging	-133.28
81	FLT104-3PH	0.604	Lagging	-200.39	0.564	Lagging	-222.57	0.578	Lagging	-214.36	0.620	Lagging	-192.58	0.752	Lagging	-133.03
82	FLT105-3PH	0.604	Lagging	-200.48	0.564	Lagging	-222.60	0.578	Lagging	-214.56	0.619	Lagging	-192.61	0.752	Lagging	-133.25
83	FLT106-3PH	0.604	Lagging	-200.69	0.563	Lagging	-223.33	0.577	Lagging	-214.91	0.619	Lagging	-193.10	0.752	Lagging	-133.35
84	FLT107-3PH	0.604	Lagging	-200.41	0.564	Lagging	-222.58	0.578	Lagging	-214.38	0.620	Lagging	-192.58	0.752	Lagging	-133.05
85	FLT108-3PH	0.604	Lagging	-200.52	0.564	Lagging	-222.71	0.578	Lagging	-214.66	0.619	Lagging	-192.66	0.752	Lagging	-133.09
87	FLT116-3PH	0.581	Lagging	-212.79	0.564	Lagging	-222.66	0.559	Lagging	-225.43	0.587	Lagging	-209.47	0.751	Lagging	-133.79
88	FLT117-3PH	N/A	N/A	N/A	0.541	Lagging	-236.32	0.605	Lagging	-200.00	0.625	Lagging	-189.62	0.767	Lagging	-127.35
89	FLT122-3PH	0.608	Lagging	-198.74	0.568	Lagging	-220.32	0.581	Lagging	-212.73	0.624	Lagging	-190.47	0.755	Lagging	-131.92
90	FLT123-3PH	0.495	Lagging	-266.88	0.480	Lagging	-278.10	0.441	Lagging	-309.34	0.530	Lagging	-243.15	0.638	Lagging	-183.50
91	FLT125-3PH	0.480	Lagging	-277.87	0.444	Lagging	-306.58	0.421	Lagging	-327.43	0.494	Lagging	-267.33	0.634	Lagging	-185.41
92	FLT126-3PH	0.603	Lagging	-201.16	0.559	Lagging	-225.39	0.578	Lagging	-214.46	0.616	Lagging	-194.61	0.754	Lagging	-132.38
93	FLT129-3PH	N/A	N/A	N/A	N/A	N/A	N/A	0.352	Lagging	-403.65	0.611	Lagging	-196.82	0.595	Lagging	-205.40
94	FLT130-3PH	0.598	Lagging	-203.91	0.557	Lagging	-226.59	N/A	N/A	N/A	N/A	N/A	N/A	N/A	N/A	N/A
95	FLT132-3PH	0.610	Lagging	-197.34	0.567	Lagging	-221.06	0.578	Lagging	-214.47	0.620	Lagging	-192.31	0.752	Lagging	-133.40
96	FLT133-3PH	0.604	Lagging	-200.38	0.563	Lagging	-222.88	0.577	Lagging	-215.29	0.620	Lagging	-192.60	0.749	Lagging	-134.30
97	FLT134-3PH	0.614	Lagging	-195.59	0.567	Lagging	-220.83	0.579	Lagging	-214.26	0.620	Lagging	-192.24	0.753	Lagging	-133.00
98	FLT135-3PH	0.599	Lagging	-203.39	0.563	Lagging	-223.39	0.573	Lagging	-217.51	0.618	Lagging	-193.40	0.746	Lagging	-135.75
99	FLT136-3PH	0.604	Lagging	-200.39	0.564	Lagging	-222.57	0.581	Lagging	-213.15	0.620	Lagging	-192.44	0.756	Lagging	-131.55
100	FLT137-3PH	0.604	Lagging	-200.38	0.564	Lagging	-222.67	0.578	Lagging	-214.32	0.620	Lagging	-192.52	0.753	Lagging	-132.68
101	FLT138-3PH	0.594	Lagging	-205.99	0.557	Lagging	-226.87	0.563	Lagging	-223.05	0.611	Lagging	-197.05	0.739	Lagging	-138.70
102	FLT139-3PH	0.607	Lagging	-199.14	0.566	Lagging	-221.45	0.578	Lagging	-214.76	0.617	Lagging	-193.66	0.752	Lagging	-133.05
103	FLT140-3PH	0.609	Lagging	-197.95	0.566	Lagging	-221.44	0.578	Lagging	-214.37	0.619	Lagging	-192.74	0.753	Lagging	-132.89
104	FLT141-3PH	0.597	Lagging	-204.12	0.560	Lagging	-224.60	0.574	Lagging	-217.02	0.618	Lagging	-193.41	0.744	Lagging	-136.45
105	FLT142-3PH	0.604	Lagging	-200.40	0.566	Lagging	-221.43	0.574	Lagging	-216.83	0.618	Lagging	-193.26	0.746	Lagging	-135.76
106	FLT143-3PH	0.616	Lagging	-194.40	0.571	Lagging	-218.39	0.581	Lagging	-213.17	0.620	Lagging	-192.27	0.754	Lagging	-132.43
107	FLT144-3PH	0.604	Lagging	-200.53	0.564	Lagging	-222.62	0.578	Lagging	-214.38	0.620	Lagging	-192.46	0.753	Lagging	-133.03
108	FLT145-3PH	0.605	Lagging	-199.96	0.564	Lagging	-222.48	0.578	Lagging	-214.44	0.619	Lagging	-192.64	0.752	Lagging	-133.05
109	FLT146-3PH	0.606	Lagging	-199.50	0.564	Lagging	-222.33	0.578	Lagging	-214.53	0.619	Lagging	-192.62	0.752	Lagging	-133.05
110	FLT147-3PH	0.604	Lagging	-200.32	0.564	Lagging	-222.67	0.578	Lagging	-214.50	0.619	Lagging	-192.71	0.753	Lagging	-132.99
111	FLT148-3PH	0.604	Lagging	-200.51	0.564	Lagging	-222.61	0.578	Lagging	-214.59	0.619	Lagging	-192.62	0.752	Lagging	-133.29
112	FLT148-3PH	0.604	Lagging	-200.82	0.563	Lagging	-222.87	0.578	Lagging	-214.87	0.619	Lagging	-192.92	0.752	Lagging	-133.27
113	FLT150-3PH	0.604	Lagging	-200.61	0.564	Lagging	-222.83	0.578	Lagging	-214.79	0.619	Lagging	-192.74	0.752	Lagging	-133.26
114	FLT151-3PH	0.604	Lagging	-200.44	0.564	Lagging	-222.70	0.578	Lagging	-214.53	0.619	Lagging	-192.65	0.752	Lagging	-133.18
115	FLT152-3PH	0.604	Lagging	-200.67	0.564	Lagging	-222.67	0.578	Lagging	-214.68	0.619	Lagging	-192.64	0.752	Lagging	-133.16
116	FLT153-3PH	0.604	Lagging	-200.47	0.564	Lagging	-222.69	0.578	Lagging	-214.45	0.619	Lagging	-192.61	0.752	Lagging	-133.12
117	FLT154-3PH	0.604	Lagging	-200.37	0.564	Lagging	-222.70	0.578	Lagging	-214.36	0.620	Lagging	-192.55	0.752	Lagging	-133.03
118	FLT155-3PH	0.598	Lagging	-203.53	0.560	Lagging	-224.83	0.572	Lagging	-218.11	0.615	Lagging	-194.68	0.746	Lagging	-135.87
119	FLT156-3PH	0.604	Lagging	-200.46	0.564	Lagging	-222.60	0.578	Lagging	-214.57	0.620	Lagging	-192.58	0.752	Lagging	-133.07
120	FLT157-3PH	0.604	Lagging	-200.59	0.564	Lagging	-222.79	0.578	Lagging	-214.39	0.619	Lagging	-192.61	0.752	Lagging	-133.06
121	FLT158-3PH	0.604	Lagging	-200.60	0.564	Lagging	-222.74	0.578	Lagging	-214.40	0.620	Lagging	-192.59	0.752	Lagging	-133.07
122	FLT159-3PH	0.602	Lagging	-201.36	0.563	Lagging	-223.15	0.576	Lagging	-215.54	0.618	Lagging	-193.14	0.750	Lagging	-133.96
123	FLT160-3PH	0.604	Lagging	-200.55	0.564	Lagging	-222.61	0.578	Lagging	-214.65	0.619	Lagging	-192.67	0.752	Lagging	-133.14
124	FLT161-3PH	0.604	Lagging	-200.39	0.564	Lagging	-222.59	0.578	Lagging	-214.37	0.620	Lagging	-192.58	0.752	Lagging	-133.06
125	FLT162-3PH	0.606	Lagging	-199.40	0.566	Lagging	-221.63	0.579	Lagging	-213.79	0.621	Lagging	-191.94	0.754	Lagging	-132.45
126	FLT163-3PH	0.604	Lagging	-200.39	0.565	Lagging	-221.84	0.577	Lagging	-214.98	0.619	Lagging	-192.80	0.751	Lagging	-133.49
127	FLT164-3PH	0.604	Lagging	-200.39	0.565	Lagging	-221.95	0.577	Lagging	-215.09	0.619	Lagging	-192.80	0.751	Lagging	-133.59
128	FLT165-3PH	0.605	Lagging	-200.17	0.565	Lagging	-221.97	0.577	Lagging	-215.03	0.619	Lagging	-192.71	0.752	Lagging	-133.28
129	FLT166-3PH	0.605	Lagging	-200.28	0.564	Lagging	-222.56	0.578	Lagging	-214.82	0.619	Lagging	-192.72	0.752	Lagging	-133.17
130	FLT167-3PH	0.604	Lagging	-200.39	0.564	Lagging	-222.57	0.578	Lagging	-214.36	0.620	Lagging	-192.58	0.752	Lagging	-133.03
131	FLT168-3PH	0.602	Lagging	-201.64	0.562	Lagging	-223.43	0.576	Lagging	-215.86	0.618	Lagging	-193.30	0.749	Lagging	-134.28
132	FLT169-3PH	0.604	Lagging	-200.39	0.564	Lagging	-222.57	0.578	Lagging	-214.36	0.620	Lagging	-192.58	0.752	Lagging	-133.03
133	FLT170-3PH	0.603	Lagging	-200.95	0.563	Lagging	-223.14	0.577	Lagging	-215.05	0.618	Lagging	-193.52	0.751	Lagging	-133.57
134	FLT171-3PH	0.604	Lagging	-200.39	0.564	Lagging	-222.57	0.578	Lagging	-214.36	0.620	Lagging	-192.58	0.752	Lagging	-133.03
135	FLT172-3PH	0.602	Lagging	-201.67	0.562	Lagging	-223.83	0.577	Lagging	-215.38	0.619	Lagging	-192.84	0.751	Lagging	-133.51
136	FLT173-3PH	0.604	Lagging	-200.39	0.564	Lagging	-222.57	0.578	Lagging	-214.36	0.620	Lagging	-192.58	0.752	Lagging	-133.03
137	FLT174-3PH	0.605	Lagging	-200.18	0.562	Lagging	-223.65	0.579	Lagging	-213.84	0.619	Lagging	-192.64	0.754	Lagging	-132.51
138	FLT175-3PH	0.607	Lagging	-199.06	0.564	Lagging	-222.50	0.581	Lagging	-212.96	0.621	Lagging	-191.99	0.757	Lagging	-131.36
139	FLT176-3PH	0.599	Lagging	-203.44	0.559	Lagging	-225.27	0.569	Lagging	-219.95	0.614	Lagging	-195.45	0.745	Lagging	-136.07
140	FLT177-3PH	0.605	Lagging	-200.12	0.565	Lagging	-222.26	0.579	Lagging	-214.23	0.620	Lagging	-192.37	0.753	Lagging	-132.87
141	FLT178-3PH	0.603	Lagging	-200.89	0.564	Lagging	-222.74	0.577	Lagging	-215.00	0.619	Lagging	-192.76	0.751	Lagging	-133.52
142	FLT179-3PH	0.603	Lagging	-200.85	0.564	Lagging	-222.73	0.577	Lagging	-215.32	0.620	Lagging	-192.52	0.750	Lagging	-134.01

Table 5-3 (Continued)
Power Factor Analysis: GEN-2014-074

Ref No.	Case	2015 Summer Peak			2015 Winter Peak			2020 Summer Peak			2020 Winter Peak			2025 Summer Peak		
		Power Factor		Q (MVAR)	Power Factor		Q (MVAR)	Power Factor		Q (MVAR)	Power Factor		Q (MVAR)	Power Factor		Q (MVAR)
143	FLT180-3PH	0.602	Lagging	-201.49	0.562	Lagging	-223.53	0.576	Lagging	-215.59	0.617	Lagging	-193.80	0.751	Lagging	-133.57
144	FLT181-3PH	0.604	Lagging	-200.39	0.564	Lagging	-222.57	0.578	Lagging	-214.36	0.620	Lagging	-192.58	0.752	Lagging	-133.03
145	FLT182-3PH	0.599	Lagging	-203.41	0.560	Lagging	-224.85	0.570	Lagging	-219.02	0.615	Lagging	-195.00	0.745	Lagging	-136.18
146	FLT183-3PH	0.601	Lagging	-202.25	0.561	Lagging	-224.35	0.574	Lagging	-216.70	0.616	Lagging	-194.17	0.749	Lagging	-134.60
147	FLT184-3PH	0.601	Lagging	-202.32	0.561	Lagging	-224.47	0.574	Lagging	-217.00	0.616	Lagging	-194.63	0.747	Lagging	-135.48
148	FLT185-3PH	0.605	Lagging	-200.24	0.564	Lagging	-222.46	0.579	Lagging	-214.23	0.620	Lagging	-192.40	0.752	Lagging	-133.33
149	FLT186-3PH	0.604	Lagging	-200.44	0.564	Lagging	-222.61	0.578	Lagging	-214.39	0.620	Lagging	-192.56	0.752	Lagging	-133.14
150	FLT187-3PH	0.606	Lagging	-199.60	0.565	Lagging	-222.02	0.579	Lagging	-214.03	0.621	Lagging	-192.02	0.754	Lagging	-132.49
151	FLT188-3PH	0.604	Lagging	-200.39	0.564	Lagging	-222.57	0.578	Lagging	-214.36	0.620	Lagging	-192.58	0.752	Lagging	-133.03
152	FLT189-3PH	0.604	Lagging	-200.56	0.564	Lagging	-222.62	0.578	Lagging	-214.59	0.619	Lagging	-192.63	0.752	Lagging	-133.29
153	FLT190-3PH	0.604	Lagging	-200.63	0.564	Lagging	-222.76	0.578	Lagging	-214.82	0.619	Lagging	-192.89	0.752	Lagging	-133.32
154	FLT191-3PH	0.604	Lagging	-200.82	0.563	Lagging	-222.91	0.577	Lagging	-215.42	0.618	Lagging	-193.26	0.751	Lagging	-133.58
155	FLT192-3PH	0.605	Lagging	-199.83	0.565	Lagging	-222.25	0.579	Lagging	-214.04	0.620	Lagging	-192.57	0.754	Lagging	-132.25
156	FLT193-3PH	0.604	Lagging	-200.39	0.564	Lagging	-222.57	0.578	Lagging	-214.36	0.620	Lagging	-192.58	0.752	Lagging	-133.03
157	FLT194-3PH	0.604	Lagging	-200.37	0.564	Lagging	-222.63	0.578	Lagging	-214.48	0.619	Lagging	-192.62	0.752	Lagging	-133.10
158	FLT195-3PH	0.580	Lagging	-213.58	0.547	Lagging	-232.82	0.542	Lagging	-235.89	0.598	Lagging	-203.98	0.723	Lagging	-145.04
159	FLT196-3PH	0.615	Lagging	-194.85	0.569	Lagging	-219.92	0.586	Lagging	-210.41	0.621	Lagging	-191.98	0.760	Lagging	-129.78
160	FLT197-3PH	0.608	Lagging	-198.46	0.566	Lagging	-221.44	0.563	Lagging	-223.24	0.617	Lagging	-193.86	0.750	Lagging	-133.94
161	FLT198-3PH	0.604	Lagging	-200.44	0.564	Lagging	-222.64	0.579	Lagging	-214.10	0.620	Lagging	-192.52	0.753	Lagging	-132.97
162	FLT199-3PH	0.609	Lagging	-198.01	0.566	Lagging	-221.17	0.578	Leading	10.03	0.619	Lagging	-192.64	0.752	Lagging	-133.43
163	FLT200-3PH	0.604	Lagging	-200.48	0.564	Lagging	-222.69	0.579	Lagging	-214.23	0.620	Lagging	-192.59	0.753	Lagging	-133.01
164	FLT201-3PH	0.602	Lagging	-201.47	0.563	Lagging	-222.88	0.575	Lagging	-216.10	0.621	Lagging	-192.04	0.748	Lagging	-134.74
165	FLT202-3PH	0.604	Lagging	-200.42	0.564	Lagging	-222.64	0.579	Lagging	-214.17	0.620	Lagging	-192.53	0.753	Lagging	-132.93
166	FLT203-3PH	0.589	Lagging	-208.55	0.555	Lagging	-228.11	0.554	Lagging	-228.59	0.608	Lagging	-198.31	0.732	Lagging	-141.40
167	FLT204-3PH	0.606	Lagging	-199.68	0.565	Lagging	-222.05	0.578	Lagging	-214.61	0.619	Lagging	-192.94	0.752	Lagging	-133.06
168	FLT205-3PH	0.604	Lagging	-200.44	0.564	Lagging	-222.62	0.578	Lagging	-214.48	0.619	Lagging	-192.63	0.752	Lagging	-133.18
169	FLT206-3PH	0.604	Lagging	-200.71	0.564	Lagging	-222.65	0.579	Lagging	-214.11	0.621	Lagging	-192.10	0.755	Lagging	-132.15
170	FLT207-3PH	0.603	Lagging	-201.16	0.563	Lagging	-223.04	0.578	Lagging	-214.85	0.619	Lagging	-192.86	0.751	Lagging	-133.58
171	FLT208-3PH	0.601	Lagging	-202.09	0.562	Lagging	-223.67	0.576	Lagging	-215.81	0.619	Lagging	-193.02	0.749	Lagging	-134.42
172	FLT209-3PH	0.605	Lagging	-199.98	0.568	Lagging	-220.35	0.583	Lagging	-211.62	0.626	Lagging	-189.39	0.759	Lagging	-130.26
173	FLT210-3PH	0.607	Lagging	-198.83	0.564	Lagging	-222.82	0.576	Lagging	-215.50	0.617	Lagging	-193.80	0.751	Lagging	-133.45
174	FLT211-3PH	0.605	Lagging	-200.07	0.564	Lagging	-222.40	0.578	Lagging	-214.73	0.619	Lagging	-192.64	0.752	Lagging	-133.30
175	FLT212-3PH	0.604	Lagging	-200.77	0.563	Lagging	-223.00	0.579	Lagging	-214.16	0.620	Lagging	-192.44	0.754	Lagging	-132.49
176	FLT213-3PH	0.604	Lagging	-200.43	0.564	Lagging	-222.58	0.578	Lagging	-214.45	0.619	Lagging	-192.63	0.753	Lagging	-132.95
177	FLT214-3PH	0.849	Lagging	-94.50	0.827	Lagging	-103.53	0.948	Lagging	-50.79	0.905	Lagging	-71.40	0.989	Lagging	-23.05
178	FLT215-3PH	0.984	Leading	27.81	0.982	Leading	28.82	0.980	Leading	30.77	0.983	Leading	28.07	0.968	Leading	39.20
179	FLT216-3PH	0.839	Lagging	-98.66	0.960	Lagging	-44.27	0.943	Lagging	-53.42	0.899	Lagging	-73.95	0.992	Lagging	-19.81
180	FLT217-3PH	0.605	Lagging	-199.94	0.565	Lagging	-221.73	0.592	Lagging	-207.00	0.626	Lagging	-189.59	0.776	Lagging	-123.71
181	FLT218-3PH	0.665	Lagging	-170.54	0.628	Lagging	-188.31	0.644	Lagging	-180.57	0.692	Lagging	-158.41	0.807	Lagging	-111.34
182	FLT219-3PH	0.611	Lagging	-197.11	0.569	Lagging	-219.60	0.584	Lagging	-211.03	0.625	Lagging	-189.76	0.759	Lagging	-130.46
183	FLT220-3PH	0.607	Lagging	-199.14	0.567	Lagging	-221.10	0.579	Lagging	-214.04	0.621	Lagging	-191.67	0.753	Lagging	-132.79
184	FLT221-3PH	N/A	N/A	N/A	0.438	Lagging	-312.19	0.328	Lagging	-437.30	0.477	Lagging	-280.02	0.556	Lagging	-227.30
186	FLT223-3PH	0.607	Lagging	-198.89	0.566	Lagging	-221.24	N/A	N/A	N/A	0.622	Lagging	-191.55	N/A	N/A	N/A
187	FLT224-3PH	0.487	Lagging	-272.30	0.431	Lagging	-317.89	N/A	N/A	N/A	0.470	Lagging	-285.29	N/A	N/A	N/A
188	FLT225-3PH	0.610	Lagging	-197.60	0.565	Lagging	-221.97	N/A	N/A	N/A	0.622	Lagging	-191.13	N/A	N/A	N/A

Study Generator GEN-2014-074

The Power Factor Analysis shows that GEN-2014-074 has a power factor range of 0.476 lagging (supplying) to 0.980 leading (absorbing) for the 2015 Summer Peak conditions, a power factor range of 0.431 lagging (supplying) to 0.982 leading (absorbing) for the 2015 Winter Peak conditions, a power factor range of 0.328 lagging (supplying) to 0.980 leading (absorbing) for the 2020 Summer Peak conditions, a power factor range of 0.470 lagging (supplying) to 0.983 leading (absorbing) for the 2020 Winter Peak conditions, and a power factor range of 0.556 lagging (supplying) to 0.968 leading (absorbing) for the 2025 Summer Peak conditions.

Table 5-4
Power Factor Analysis: GEN-2015-009

Ref No.	Case	2015 Summer Peak			2015 Winter Peak			2020 Summer Peak			2020 Winter Peak			2025 Summer Peak		
		Power Factor		Q (MVAR)	Power Factor		Q (MVAR)	Power Factor		Q (MVAR)	Power Factor		Q (MVAR)	Power Factor		Q (MVAR)
0	Base	0.997	Leading	21.86	0.997	Leading	23.85	0.995	Lagging	-28.80	0.996	Lagging	-27.41	0.997	Lagging	-23.58
1	FLT01-3PH	0.997	Leading	22.14	0.997	Leading	23.93	0.995	Lagging	-28.83	0.996	Lagging	-27.44	0.997	Lagging	-23.68
2	FLT02-3PH	0.997	Leading	22.14	0.997	Leading	23.94	0.995	Lagging	-28.86	0.996	Lagging	-27.46	0.997	Lagging	-23.72
3	FLT03-3PH	0.997	Leading	21.81	0.997	Leading	23.79	0.995	Lagging	-28.87	0.996	Lagging	-27.46	0.997	Lagging	-23.61
4	FLT04-3PH	0.997	Leading	21.94	0.997	Leading	23.80	0.995	Lagging	-29.72	0.996	Lagging	-28.40	0.996	Lagging	-25.21
5	FLT05-3PH	0.997	Leading	23.58	0.996	Leading	25.96	0.996	Lagging	-27.06	0.996	Lagging	-26.97	0.997	Lagging	-24.34
6	FLT06-3PH	0.997	Leading	24.12	0.996	Leading	26.84	0.996	Lagging	-27.33	0.996	Lagging	-27.05	0.997	Lagging	-23.91
7	FLT07-3PH	0.997	Leading	21.96	0.997	Leading	23.81	0.995	Lagging	-29.67	0.996	Lagging	-28.29	0.997	Lagging	-25.01
8	FLT08-3PH	0.997	Leading	21.57	0.996	Leading	25.50	0.996	Lagging	-26.36	0.996	Lagging	-26.70	0.996	Lagging	-25.21
9	FLT09-3PH	0.998	Leading	17.53	0.997	Leading	21.72	0.994	Lagging	-32.98	0.996	Lagging	-26.71	0.996	Lagging	-26.18
10	FLT10-3PH	0.997	Leading	21.68	0.997	Leading	23.66	0.994	Lagging	-31.61	0.995	Lagging	-30.01	0.995	Lagging	-29.29
11	FLT11-3PH	0.997	Leading	21.81	0.997	Leading	23.65	0.995	Lagging	-30.01	0.996	Lagging	-27.85	0.996	Lagging	-25.47
12	FLT12-3PH	0.998	Leading	21.14	0.997	Leading	23.37	0.995	Lagging	-31.29	0.995	Lagging	-29.35	0.996	Lagging	-27.58
13	FLT13-3PH	0.998	Leading	18.98	0.997	Leading	22.33	0.989	Lagging	-44.46	0.991	Lagging	-40.05	0.989	Lagging	-45.38
14	FLT14-3PH	0.999	Leading	14.62	0.999	Leading	16.08	0.990	Lagging	-42.44	0.993	Lagging	-34.72	0.990	Lagging	-43.29
15	FLT15-3PH	0.990	Leading	41.74	0.992	Leading	37.65	0.973	Lagging	-71.41	0.987	Lagging	-48.04	0.977	Lagging	-65.75
16	FLT16-3PH	0.998	Leading	19.69	0.997	Leading	21.33	0.995	Lagging	-30.24	0.995	Lagging	-31.35	0.996	Lagging	-27.15
17	FLT22-3PH	0.997	Leading	22.33	0.997	Leading	24.09	0.996	Lagging	-25.87	0.997	Lagging	-24.51	0.998	Lagging	-19.92
18	FLT23-3PH	0.997	Leading	22.05	0.997	Leading	23.60	0.996	Lagging	-27.86	0.996	Lagging	-26.92	0.997	Lagging	-22.82
19	FLT24-3PH	0.998	Leading	18.24	0.997	Leading	23.24	0.996	Lagging	-26.42	0.996	Lagging	-25.33	0.995	Lagging	-29.13
20	FLT25-3PH	0.997	Leading	21.82	0.997	Leading	23.79	0.995	Lagging	-28.68	0.996	Lagging	-27.47	0.997	Lagging	-23.68
21	FLT28-3PH	0.997	Leading	22.62	0.997	Leading	24.60	0.995	Lagging	-31.08	0.995	Lagging	-29.91	0.996	Lagging	-26.56
22	FLT29-3PH	N/A	N/A	N/A	0.997	Leading	23.60	N/A	N/A	N/A	N/A	N/A	N/A	0.997	Lagging	-24.70
23	FLT30-3PH	N/A	N/A	N/A	0.997	Leading	23.03	N/A	N/A	N/A	N/A	N/A	N/A	0.997	Lagging	-24.52
24	FLT31-3PH	N/A	N/A	N/A	0.998	Leading	20.39	N/A	N/A	N/A	N/A	N/A	N/A	0.999	Lagging	-14.82
25	FLT33-3PH	0.997	Leading	25.12	0.996	Leading	26.07	0.995	Lagging	-28.80	0.996	Lagging	-27.41	0.997	Lagging	-23.58
26	FLT34-3PH	0.997	Leading	22.00	0.997	Leading	24.36	0.995	Lagging	-30.35	0.996	Lagging	-28.11	0.996	Lagging	-27.65
27	FLT35-3PH	0.998	Leading	21.16	0.997	Leading	22.48	0.995	Lagging	-30.02	0.995	Lagging	-28.74	0.996	Lagging	-25.27
28	FLT38-3PH	0.997	Leading	22.29	0.997	Leading	24.21	0.996	Lagging	-28.53	0.996	Lagging	-26.90	0.997	Lagging	-23.23
29	FLT42-3PH	0.998	Leading	21.23	0.997	Leading	23.21	0.994	Lagging	-31.89	0.995	Lagging	-28.93	0.995	Lagging	-31.55
30	FLT45-3PH	0.997	Leading	22.67	0.997	Leading	24.48	0.995	Lagging	-31.01	0.995	Lagging	-28.84	0.996	Lagging	-26.41
31	FLT46-3PH	0.998	Leading	18.66	0.998	Leading	19.99	0.995	Lagging	-30.51	0.995	Lagging	-28.63	0.996	Lagging	-27.14
32	FLT47-3PH	0.998	Leading	17.69	0.998	Leading	19.59	0.995	Lagging	-29.87	0.996	Lagging	-28.30	0.996	Lagging	-27.04
33	FLT48-3PH	0.997	Leading	21.57	0.996	Leading	25.50	0.996	Lagging	-26.39	0.996	Lagging	-26.73	0.996	Lagging	-25.23
34	FLT49-3PH	1.000	Leading	2.53	1.000	Leading	5.41	0.992	Lagging	-37.30	0.995	Lagging	-30.58	0.997	Lagging	-24.41
35	FLT50-3PH	0.997	Leading	24.41	0.996	Leading	26.16	0.995	Lagging	-29.20	0.995	Lagging	-29.12	0.996	Lagging	-26.57
36	FLT51-3PH	0.998	Leading	19.03	0.997	Leading	21.89	0.994	Lagging	-32.59	0.995	Lagging	-29.04	0.997	Lagging	-24.81
38	FLT53-3PH	0.998	Leading	18.40	0.998	Leading	17.45	0.994	Lagging	-32.29	0.995	Lagging	-30.59	0.996	Lagging	-25.37
40	FLT55-3PH	0.996	Leading	26.20	0.996	Leading	28.21	0.995	Lagging	-30.56	0.996	Lagging	-28.14	0.997	Lagging	-22.12
41	FLT56-3PH	0.998	Leading	18.76	0.997	Leading	23.40	0.995	Lagging	-31.58	0.995	Lagging	-28.70	0.996	Lagging	-26.68
42	FLT57-3PH	0.998	Leading	18.43	0.997	Leading	23.00	0.994	Lagging	-32.13	0.995	Lagging	-29.13	0.996	Lagging	-27.12
43	FLT58-3PH	0.992	Leading	38.65	0.994	Leading	33.98	0.997	Lagging	-21.48	0.997	Lagging	-23.76	1.000	Lagging	-6.54
44	FLT59-3PH	0.997	Leading	23.16	0.997	Leading	24.45	0.996	Lagging	-27.43	0.996	Lagging	-26.62	0.997	Lagging	-21.79
47	FLT62-3PH	0.997	Leading	21.86	0.997	Leading	23.85	0.995	Lagging	-28.80	0.996	Lagging	-27.41	0.997	Lagging	-23.58
49	FLT64-3PH	0.998	Leading	21.03	0.997	Leading	22.83	0.995	Lagging	-29.53	0.996	Lagging	-27.71	0.997	Lagging	-23.81
51	FLT67-3PH	0.998	Leading	20.19	0.997	Leading	22.80	0.995	Lagging	-30.55	0.996	Lagging	-27.78	0.996	Lagging	-25.60
55	FLT71-3PH	0.997	Leading	22.06	0.997	Leading	23.92	0.995	Lagging	-28.81	0.996	Lagging	-27.41	0.997	Lagging	-23.52
56	FLT72-3PH	0.997	Leading	22.17	0.997	Leading	24.02	0.995	Lagging	-28.81	0.996	Lagging	-27.39	0.997	Lagging	-23.50
57	FLT73-3PH	0.997	Leading	21.84	0.997	Leading	23.72	0.995	Lagging	-28.57	0.996	Lagging	-27.48	0.997	Lagging	-23.35
58	FLT74-3PH	0.997	Leading	21.87	0.997	Leading	23.82	0.995	Lagging	-28.71	0.996	Lagging	-27.55	0.997	Lagging	-23.49
59	FLT75-3PH	0.997	Leading	21.73	0.997	Leading	23.58	0.995	Lagging	-28.86	0.996	Lagging	-27.49	0.997	Lagging	-23.67
60	FLT76-3PH	0.997	Leading	21.97	0.997	Leading	23.87	0.995	Lagging	-28.75	0.996	Lagging	-27.56	0.997	Lagging	-23.63
61	FLT77-3PH	0.997	Leading	21.64	0.997	Leading	23.25	0.995	Lagging	-29.19	0.996	Lagging	-27.84	0.997	Lagging	-23.94
62	FLT78-3PH	0.997	Leading	22.18	0.997	Leading	24.33	0.996	Lagging	-28.22	0.996	Lagging	-27.47	0.997	Lagging	-22.69
63	FLT79-3PH	0.997	Leading	21.80	0.997	Leading	23.78	0.995	Lagging	-28.58	0.996	Lagging	-27.32	0.997	Lagging	-23.27
64	FLT80-3PH	0.997	Leading	22.61	0.997	Leading	24.51	0.995	Lagging	-29.01	0.996	Lagging	-27.67	0.997	Lagging	-23.57
65	FLT81-3PH	0.998	Leading	20.96	0.997	Leading	22.47	0.995	Lagging	-29.21	0.996	Lagging	-27.68	0.997	Lagging	-24.28
66	FLT82-3PH	0.997	Leading	21.71	0.997	Leading	23.74	0.995	Lagging	-28.57	0.996	Lagging	-27.36	0.997	Lagging	-23.43
67	FLT88-3PH	0.997	Leading	22.03	0.997	Leading	24.07	0.995	Lagging	-30.59	0.995	Lagging	-29.69	0.997	Lagging	-24.59
68	FLT90-3PH	0.998	Leading	19.01	0.998	Leading	20.43	0.995	Lagging	-31.33	0.995	Lagging	-30.47	0.996	Lagging	-25.30
69	FLT91-3PH	0.997	Leading	23.05	0.997	Leading	24.24	0.995	Lagging	-29.22	0.996	Lagging	-27.89	0.997	Lagging	-23.39
70	FLT93-3PH	0.997	Leading	21.83	0.997	Leading	23.81	0.995	Lagging	-28.79	0.996	Lagging	-27.42	0.997	Lagging	-23.58
71	FLT94-3PH	0.997	Leading	21.78	0.997	Leading	23.96	0.995	Lagging	-28.84	0.996	Lagging	-27.58	0.997	Lagging	-23.60
72	FLT95-3PH	0.997	Leading	21.85	0.997	Leading	23.81	0.995	Lagging	-29.39	0.996	Lagging	-27.56	0.997	Lagging	-24.67
73	FLT96-3PH	0.997	Leading	21.86	0.997	Leading	23.85	0.995	Lagging	-28.80	0.996	Lagging	-27.41	0.997	Lagging	-23.58
74	FLT97-3PH	0.997	Leading	22.06	0.997	Leading	24.05	0.995	Lagging	-29.30	0.996	Lagging	-27.64	0.997	Lagging	-23.88

Table 5-4 (Continued)
Power Factor Analysis: GEN-2015-009

Ref No.	Case	2015 Summer Peak			2015 Winter Peak			2020 Summer Peak			2020 Winter Peak			2025 Summer Peak		
		Power Factor		Q (MVAR)	Power Factor		Q (MVAR)	Power Factor		Q (MVAR)	Power Factor		Q (MVAR)	Power Factor		Q (MVAR)
76	FLT99-3PH	0.997	Leading	22.56	0.997	Leading	24.49	0.996	Lagging	-27.37	0.996	Lagging	-25.93	0.997	Lagging	-22.78
77	FLT100-3PH	0.997	Leading	21.84	0.997	Leading	23.84	0.995	Lagging	-28.81	0.996	Lagging	-27.42	0.997	Lagging	-23.59
78	FLT101-3PH	0.997	Leading	21.85	0.997	Leading	23.85	0.995	Lagging	-28.81	0.996	Lagging	-27.43	0.997	Lagging	-23.59
79	FLT102-3PH	0.997	Leading	21.84	0.997	Leading	23.84	0.995	Lagging	-28.81	0.996	Lagging	-27.42	0.997	Lagging	-23.59
80	FLT103-3PH	0.997	Leading	21.78	0.997	Leading	23.81	0.995	Lagging	-28.86	0.996	Lagging	-27.43	0.997	Lagging	-23.63
81	FLT104-3PH	0.997	Leading	21.86	0.997	Leading	23.85	0.995	Lagging	-28.80	0.996	Lagging	-27.41	0.997	Lagging	-23.58
82	FLT105-3PH	0.997	Leading	21.79	0.997	Leading	23.75	0.995	Lagging	-28.85	0.996	Lagging	-27.45	0.997	Lagging	-23.60
83	FLT106-3PH	0.997	Leading	21.77	0.997	Leading	23.78	0.995	Lagging	-28.90	0.996	Lagging	-27.46	0.997	Lagging	-23.61
84	FLT107-3PH	0.997	Leading	21.85	0.997	Leading	23.84	0.995	Lagging	-28.80	0.996	Lagging	-27.42	0.997	Lagging	-23.59
85	FLT108-3PH	0.997	Leading	21.85	0.997	Leading	23.84	0.995	Lagging	-28.83	0.996	Lagging	-27.43	0.997	Lagging	-23.59
87	FLT116-3PH	0.997	Leading	22.38	0.997	Leading	24.22	0.996	Lagging	-28.07	0.997	Lagging	-24.78	0.997	Lagging	-22.87
88	FLT117-3PH	N/A	N/A	N/A	N/A	N/A	N/A	0.996	Lagging	-28.09	0.997	Lagging	-24.67	0.996	Lagging	-27.77
89	FLT122-3PH	0.997	Leading	21.92	0.997	Leading	23.96	0.995	Lagging	-28.64	0.996	Lagging	-27.19	0.997	Lagging	-23.51
90	FLT123-3PH	0.999	Leading	16.36	0.998	Leading	17.94	0.991	Lagging	-39.99	0.993	Lagging	-34.92	0.995	Lagging	-28.70
91	FLT125-3PH	0.998	Leading	19.93	0.998	Leading	21.18	0.992	Lagging	-37.33	0.993	Lagging	-35.12	0.996	Lagging	-27.37
92	FLT126-3PH	0.997	Leading	21.67	0.997	Leading	24.03	0.995	Lagging	-28.90	0.996	Lagging	-27.40	0.997	Lagging	-23.64
93	FLT129-3PH	N/A	N/A	N/A	N/A	N/A	N/A	0.995	Lagging	-31.02	0.996	Lagging	-26.56	0.997	Lagging	-22.93
94	FLT130-3PH	0.997	Leading	22.01	0.997	Leading	24.06	N/A	N/A	N/A	N/A	N/A	N/A	N/A	N/A	N/A
95	FLT132-3PH	0.997	Leading	22.34	0.997	Leading	23.84	0.995	Lagging	-28.75	0.996	Lagging	-27.59	0.997	Lagging	-23.33
96	FLT133-3PH	0.997	Leading	23.39	0.997	Leading	24.99	0.996	Lagging	-28.51	0.996	Lagging	-27.36	0.997	Lagging	-22.94
97	FLT134-3PH	0.997	Leading	22.06	0.997	Leading	23.56	0.995	Lagging	-28.97	0.996	Lagging	-27.73	0.997	Lagging	-23.59
98	FLT135-3PH	0.997	Leading	21.82	0.997	Leading	23.91	0.995	Lagging	-29.06	0.996	Lagging	-27.41	0.997	Lagging	-23.79
99	FLT136-3PH	0.997	Leading	21.86	0.997	Leading	23.85	0.995	Lagging	-29.23	0.996	Lagging	-27.56	0.997	Lagging	-24.12
100	FLT137-3PH	0.997	Leading	21.86	0.997	Leading	23.83	0.995	Lagging	-28.73	0.996	Lagging	-27.31	0.997	Lagging	-23.44
101	FLT138-3PH	0.997	Leading	22.02	0.997	Leading	24.01	0.995	Lagging	-29.03	0.996	Lagging	-27.50	0.997	Lagging	-23.68
102	FLT139-3PH	0.997	Leading	21.92	0.997	Leading	23.91	0.995	Lagging	-28.82	0.996	Lagging	-27.43	0.997	Lagging	-23.60
103	FLT140-3PH	0.997	Leading	21.64	0.997	Leading	23.33	0.995	Lagging	-29.67	0.996	Lagging	-27.77	0.997	Lagging	-24.61
104	FLT141-3PH	0.997	Leading	21.74	0.997	Leading	23.61	0.995	Lagging	-29.53	0.996	Lagging	-27.82	0.997	Lagging	-24.72
105	FLT142-3PH	0.998	Leading	19.72	0.997	Leading	22.77	0.995	Lagging	-30.20	0.996	Lagging	-27.84	0.997	Lagging	-24.96
106	FLT143-3PH	0.997	Leading	21.97	0.997	Leading	24.51	0.995	Lagging	-31.39	0.996	Lagging	-28.34	0.996	Lagging	-25.53
107	FLT144-3PH	0.997	Leading	21.87	0.997	Leading	23.50	0.995	Lagging	-28.85	0.996	Lagging	-27.76	0.997	Lagging	-23.78
108	FLT145-3PH	0.997	Leading	21.88	0.997	Leading	23.30	0.995	Lagging	-29.11	0.996	Lagging	-27.92	0.997	Lagging	-23.83
109	FLT146-3PH	0.997	Leading	21.54	0.997	Leading	23.63	0.995	Lagging	-29.40	0.996	Lagging	-27.55	0.997	Lagging	-23.76
110	FLT147-3PH	0.997	Leading	21.79	0.997	Leading	23.59	0.995	Lagging	-29.02	0.996	Lagging	-27.65	0.997	Lagging	-23.95
111	FLT148-3PH	0.997	Leading	21.74	0.997	Leading	23.81	0.995	Lagging	-28.99	0.996	Lagging	-27.45	0.997	Lagging	-23.79
112	FLT148-3PH	0.997	Leading	21.83	0.997	Leading	23.84	0.995	Lagging	-28.85	0.996	Lagging	-27.44	0.997	Lagging	-23.60
113	FLT150-3PH	0.997	Leading	21.80	0.997	Leading	23.79	0.995	Lagging	-28.88	0.996	Lagging	-27.45	0.997	Lagging	-23.61
114	FLT151-3PH	0.997	Leading	21.81	0.997	Leading	23.79	0.995	Lagging	-28.85	0.996	Lagging	-27.44	0.997	Lagging	-23.60
115	FLT152-3PH	0.997	Leading	21.85	0.997	Leading	23.85	0.995	Lagging	-28.82	0.996	Lagging	-27.42	0.997	Lagging	-23.59
116	FLT153-3PH	0.997	Leading	21.85	0.997	Leading	23.84	0.995	Lagging	-28.81	0.996	Lagging	-27.42	0.997	Lagging	-23.59
117	FLT154-3PH	0.997	Leading	21.84	0.997	Leading	23.84	0.995	Lagging	-28.81	0.996	Lagging	-27.42	0.997	Lagging	-23.59
118	FLT155-3PH	0.997	Leading	21.40	0.997	Leading	23.51	0.995	Lagging	-29.48	0.996	Lagging	-27.72	0.997	Lagging	-23.90
119	FLT156-3PH	0.997	Leading	21.83	0.997	Leading	23.83	0.995	Lagging	-28.83	0.996	Lagging	-27.42	0.997	Lagging	-23.59
120	FLT157-3PH	0.997	Leading	21.84	0.997	Leading	23.85	0.995	Lagging	-28.80	0.996	Lagging	-27.41	0.997	Lagging	-23.59
121	FLT158-3PH	0.997	Leading	21.84	0.997	Leading	23.85	0.995	Lagging	-28.80	0.996	Lagging	-27.42	0.997	Lagging	-23.59
122	FLT159-3PH	0.997	Leading	21.79	0.997	Leading	23.81	0.995	Lagging	-28.96	0.996	Lagging	-27.48	0.997	Lagging	-23.68
123	FLT160-3PH	0.997	Leading	21.80	0.997	Leading	23.86	0.995	Lagging	-28.86	0.996	Lagging	-27.40	0.997	Lagging	-23.60
124	FLT161-3PH	0.997	Leading	21.86	0.997	Leading	23.85	0.995	Lagging	-28.80	0.996	Lagging	-27.41	0.997	Lagging	-23.59
125	FLT162-3PH	0.997	Leading	21.45	0.997	Leading	23.55	0.995	Lagging	-29.08	0.996	Lagging	-27.49	0.997	Lagging	-23.70
126	FLT163-3PH	0.997	Leading	21.86	0.997	Leading	23.72	0.995	Lagging	-28.93	0.996	Lagging	-27.53	0.997	Lagging	-23.73
127	FLT164-3PH	0.997	Leading	21.86	0.997	Leading	23.74	0.995	Lagging	-28.95	0.996	Lagging	-27.55	0.997	Lagging	-23.77
128	FLT165-3PH	0.998	Leading	18.29	0.998	Leading	20.44	0.995	Lagging	-30.09	0.996	Lagging	-27.67	0.997	Lagging	-23.59
129	FLT166-3PH	0.997	Leading	21.49	0.997	Leading	23.34	0.995	Lagging	-28.99	0.996	Lagging	-27.51	0.997	Lagging	-23.60
130	FLT167-3PH	0.997	Leading	21.86	0.997	Leading	23.85	0.995	Lagging	-28.80	0.996	Lagging	-27.41	0.997	Lagging	-23.58
131	FLT168-3PH	0.997	Leading	21.81	0.997	Leading	23.82	0.995	Lagging	-28.98	0.996	Lagging	-27.49	0.997	Lagging	-23.71
132	FLT169-3PH	0.997	Leading	21.86	0.997	Leading	23.85	0.995	Lagging	-28.80	0.996	Lagging	-27.41	0.997	Lagging	-23.58
133	FLT170-3PH	0.997	Leading	22.26	0.997	Leading	23.94	0.995	Lagging	-28.70	0.996	Lagging	-27.46	0.997	Lagging	-23.69
134	FLT171-3PH	0.997	Leading	21.86	0.997	Leading	23.85	0.995	Lagging	-28.80	0.996	Lagging	-27.41	0.997	Lagging	-23.58
135	FLT172-3PH	0.998	Leading	21.09	0.997	Leading	22.90	0.995	Lagging	-29.48	0.996	Lagging	-27.69	0.997	Lagging	-23.79
136	FLT173-3PH	0.997	Leading	21.86	0.997	Leading	23.85	0.995	Lagging	-28.80	0.996	Lagging	-27.41	0.997	Lagging	-23.58
137	FLT174-3PH	0.997	Leading	21.84	0.997	Leading	23.84	0.995	Lagging	-28.62	0.996	Lagging	-27.35	0.997	Lagging	-23.43
138	FLT175-3PH	0.997	Leading	21.85	0.997	Leading	23.83	0.995	Lagging	-28.64	0.996	Lagging	-27.43	0.997	Lagging	-23.39
139	FLT176-3PH	0.997	Leading	22.00	0.997	Leading	23.97	0.995	Lagging	-28.78	0.996	Lagging	-27.42	0.997	Lagging	-23.55
140	FLT177-3PH	0.997	Leading	21.82	0.997	Leading	23.81	0.995	Lagging	-28.77	0.996	Lagging	-27.43	0.997	Lagging	-23.64
141	FLT178-3PH	0.997	Leading	21.87	0.997	Leading	23.85	0.995	Lagging	-28.83	0.996	Lagging	-27.43	0.997	Lagging	-23.61
142	FLT179-3PH	0.997	Leading	21.82	0.997	Leading	23.82	0.995	Lagging	-28.91	0.996	Lagging	-27.45	0.997	Lagging	-23.74

Table 5-4 (Continued)
Power Factor Analysis: GEN-2015-009

Ref No.	Case	2015 Summer Peak			2015 Winter Peak			2020 Summer Peak			2020 Winter Peak			2025 Summer Peak		
		Power Factor		Q (MVAR)	Power Factor		Q (MVAR)	Power Factor		Q (MVAR)	Power Factor		Q (MVAR)	Power Factor		Q (MVAR)
143	FLT180-3PH	0.997	Leading	21.85	0.997	Leading	23.83	0.995	Lagging	-28.88	0.996	Lagging	-27.48	0.997	Lagging	-23.61
144	FLT181-3PH	0.997	Leading	21.86	0.997	Leading	23.85	0.995	Lagging	-28.80	0.996	Lagging	-27.41	0.997	Lagging	-23.58
145	FLT182-3PH	0.997	Leading	21.83	0.997	Leading	23.82	0.995	Lagging	-29.06	0.996	Lagging	-27.53	0.997	Lagging	-23.74
146	FLT183-3PH	0.997	Leading	21.82	0.997	Leading	23.80	0.995	Lagging	-29.04	0.996	Lagging	-27.57	0.997	Lagging	-23.72
147	FLT184-3PH	0.997	Leading	21.90	0.997	Leading	23.93	0.995	Lagging	-28.90	0.996	Lagging	-27.43	0.997	Lagging	-23.70
148	FLT185-3PH	0.997	Leading	21.86	0.997	Leading	23.85	0.995	Lagging	-28.79	0.996	Lagging	-27.40	0.997	Lagging	-23.60
149	FLT186-3PH	0.997	Leading	21.82	0.997	Leading	23.82	0.995	Lagging	-28.86	0.996	Lagging	-27.43	0.997	Lagging	-23.65
150	FLT187-3PH	0.997	Leading	21.81	0.997	Leading	23.77	0.995	Lagging	-28.76	0.996	Lagging	-27.47	0.997	Lagging	-23.61
151	FLT188-3PH	0.997	Leading	21.86	0.997	Leading	23.85	0.995	Lagging	-28.80	0.996	Lagging	-27.41	0.997	Lagging	-23.58
152	FLT189-3PH	0.997	Leading	21.85	0.997	Leading	23.85	0.995	Lagging	-28.81	0.996	Lagging	-27.41	0.997	Lagging	-23.60
153	FLT190-3PH	0.997	Leading	21.87	0.997	Leading	23.86	0.995	Lagging	-28.79	0.996	Lagging	-27.41	0.997	Lagging	-23.58
154	FLT191-3PH	0.997	Leading	21.91	0.997	Leading	23.87	0.995	Lagging	-28.72	0.996	Lagging	-27.36	0.997	Lagging	-23.51
155	FLT192-3PH	0.997	Leading	21.88	0.997	Leading	23.78	0.995	Lagging	-28.70	0.996	Lagging	-27.51	0.997	Lagging	-23.45
156	FLT193-3PH	0.997	Leading	21.86	0.997	Leading	23.85	0.995	Lagging	-28.80	0.996	Lagging	-27.41	0.997	Lagging	-23.58
157	FLT194-3PH	0.997	Leading	21.87	0.997	Leading	23.84	0.995	Lagging	-28.80	0.996	Lagging	-27.41	0.997	Lagging	-23.58
158	FLT195-3PH	0.997	Leading	22.06	0.997	Leading	24.05	0.995	Lagging	-29.30	0.996	Lagging	-27.64	0.997	Lagging	-23.88
159	FLT196-3PH	0.997	Leading	21.54	0.997	Leading	23.52	0.995	Lagging	-28.86	0.996	Lagging	-28.03	0.997	Lagging	-23.68
160	FLT197-3PH	0.997	Leading	21.89	0.997	Leading	23.59	0.996	Lagging	-27.76	0.996	Lagging	-27.66	0.997	Lagging	-22.62
161	FLT198-3PH	0.997	Leading	21.54	0.997	Leading	22.57	0.995	Lagging	-29.34	0.996	Lagging	-28.31	0.997	Lagging	-24.48
162	FLT199-3PH	0.999	Leading	16.39	0.998	Leading	17.01	0.993	Leading	-34.74	0.993	Lagging	-34.61	0.994	Lagging	-32.55
163	FLT200-3PH	0.997	Leading	21.63	0.997	Leading	22.71	0.995	Lagging	-29.23	0.996	Lagging	-28.19	0.997	Lagging	-24.28
164	FLT201-3PH	0.997	Leading	22.84	0.997	Leading	24.00	0.996	Lagging	-28.15	0.996	Lagging	-26.09	0.997	Lagging	-22.75
165	FLT202-3PH	0.997	Leading	21.77	0.997	Leading	22.84	0.995	Lagging	-29.05	0.996	Lagging	-28.08	0.997	Lagging	-24.06
166	FLT203-3PH	0.997	Leading	24.01	0.996	Leading	25.34	0.996	Lagging	-27.00	0.996	Lagging	-26.43	0.998	Lagging	-20.86
167	FLT204-3PH	0.998	Leading	19.67	0.998	Leading	17.73	0.995	Lagging	-29.25	0.996	Lagging	-26.60	0.997	Lagging	-23.90
168	FLT205-3PH	0.997	Leading	21.77	0.997	Leading	23.81	0.995	Lagging	-28.93	0.996	Lagging	-27.46	0.997	Lagging	-23.74
169	FLT206-3PH	0.997	Leading	23.31	0.997	Leading	24.47	0.996	Lagging	-27.20	0.996	Lagging	-26.62	0.997	Lagging	-21.62
170	FLT207-3PH	0.997	Leading	21.85	0.997	Leading	23.14	0.995	Lagging	-28.93	0.996	Lagging	-28.11	0.997	Lagging	-24.25
171	FLT208-3PH	0.997	Leading	21.61	0.997	Leading	23.31	0.995	Lagging	-29.40	0.996	Lagging	-26.50	0.997	Lagging	-24.73
172	FLT209-3PH	0.998	Leading	18.14	0.998	Leading	17.64	0.994	Lagging	-31.73	0.995	Lagging	-30.91	0.996	Lagging	-26.88
173	FLT210-3PH	0.997	Leading	23.38	0.997	Leading	22.12	0.994	Lagging	-33.67	0.994	Lagging	-32.92	0.996	Lagging	-25.83
174	FLT211-3PH	0.997	Leading	22.51	0.997	Leading	23.99	0.995	Lagging	-28.60	0.996	Lagging	-27.20	0.997	Lagging	-23.16
175	FLT212-3PH	0.997	Leading	24.18	0.996	Leading	25.66	0.996	Lagging	-26.54	0.996	Lagging	-26.07	0.998	Lagging	-20.77
176	FLT213-3PH	0.997	Leading	22.38	0.997	Leading	23.75	0.996	Lagging	-28.31	0.996	Lagging	-27.56	0.997	Lagging	-22.90
177	FLT214-3PH	0.997	Leading	23.35	0.996	Leading	25.51	0.995	Lagging	-29.33	0.996	Lagging	-27.24	0.997	Lagging	-22.17
178	FLT215-3PH	0.997	Leading	23.13	0.997	Leading	25.15	0.997	Lagging	-24.38	0.996	Lagging	-25.68	0.998	Lagging	-21.13
179	FLT216-3PH	0.997	Leading	23.69	0.996	Leading	25.50	0.995	Lagging	-30.56	0.996	Lagging	-26.36	0.997	Lagging	-24.13
180	FLT217-3PH	0.997	Leading	21.86	0.997	Leading	23.87	0.995	Lagging	-28.60	0.996	Lagging	-27.42	0.997	Lagging	-23.32
181	FLT218-3PH	0.997	Leading	22.04	0.997	Leading	24.11	0.996	Lagging	-28.01	0.996	Lagging	-26.15	0.997	Lagging	-23.03
182	FLT219-3PH	0.997	Leading	21.87	0.997	Leading	23.87	0.995	Lagging	-28.72	0.996	Lagging	-27.39	0.997	Lagging	-23.51
183	FLT220-3PH	0.998	Leading	21.16	0.997	Leading	22.88	0.995	Lagging	-29.15	0.996	Lagging	-27.54	0.997	Lagging	-23.55
184	FLT221-3PH	N/A	N/A	N/A	N/A	N/A	N/A	N/A	N/A	N/A	0.995	Lagging	-28.59	0.997	Lagging	-22.98
186	FLT223-3PH	0.997	Leading	22.15	0.997	Leading	24.24	N/A	N/A	N/A	0.996	Lagging	-26.05	N/A	N/A	N/A
187	FLT224-3PH	0.997	Leading	22.01	0.997	Leading	24.05	N/A	N/A	N/A	0.996	Lagging	-28.25	N/A	N/A	N/A
188	FLT225-3PH	0.997	Leading	21.96	0.997	Leading	23.89	N/A	N/A	N/A	0.996	Lagging	-27.11	N/A	N/A	N/A

Study Generator GEN-2015-009

The Power Factor Analysis shows that GEN-2015-009 has a power factor range of 0.990 leading (absorbing) to 1.00 (unity) for the 2015 Summer Peak conditions, a power factor range of 0.992 leading (absorbing) to 1.00 (unity) for the 2015 Winter Peak conditions, a power factor range of 0.973 to 0.997 lagging (supplying) for the 2020 Summer Peak conditions, a power factor range of 0.987 to 0.997 lagging (supplying) for the 2020 Winter Peak conditions, and a power factor range of 0.977 lagging (supplying) to 1.00 (unity) for the 2025 Summer Peak conditions.

Table 5-5
Power Factor Analysis: GEN-2015-010

Ref No.	Case	2015 Summer Peak			2015 Winter Peak			2020 Summer Peak			2020 Winter Peak			2025 Summer Peak		
		Power Factor		Q (MVAR)	Power Factor		Q (MVAR)	Power Factor		Q (MVAR)	Power Factor		Q (MVAR)	Power Factor		Q (MVAR)
0	Base	0.997	Leading	20.56	0.996	Leading	23.51	0.997	Leading	20.43	0.997	Leading	20.24	0.999	Leading	12.69
1	FLT01-3PH	0.997	Leading	18.95	0.996	Leading	22.26	0.997	Leading	19.54	0.997	Leading	19.30	0.999	Leading	11.85
2	FLT02-3PH	0.997	Leading	18.41	0.996	Leading	21.89	0.997	Leading	19.05	0.997	Leading	19.46	0.999	Leading	11.70
3	FLT03-3PH	0.996	Leading	21.86	0.995	Leading	25.53	0.996	Leading	22.35	0.997	Leading	20.91	0.998	Leading	14.26
4	FLT04-3PH	0.997	Leading	20.14	0.996	Leading	23.42	0.997	Leading	19.86	0.997	Leading	19.50	0.999	Leading	11.77
5	FLT05-3PH	0.998	Lagging	-16.34	0.997	Lagging	-19.00	1.000	Lagging	-7.24	0.993	Lagging	-29.11	0.991	Lagging	-33.88
6	FLT06-3PH	1.000	Leading	5.07	1.000	Lagging	-4.52	0.995	Lagging	-23.87	1.000	Lagging	-1.53	1.000	Leading	6.31
7	FLT07-3PH	0.997	Leading	20.22	0.996	Leading	23.46	0.997	Leading	19.96	0.997	Leading	19.61	0.999	Leading	11.91
8	FLT08-3PH	0.997	Leading	20.36	0.995	Leading	25.01	0.997	Leading	19.89	0.997	Leading	17.76	1.000	Leading	4.95
9	FLT09-3PH	0.996	Leading	22.17	0.995	Leading	24.07	0.997	Leading	20.49	0.997	Leading	20.31	0.999	Leading	12.13
10	FLT10-3PH	0.997	Leading	19.47	0.996	Leading	22.28	0.997	Leading	19.94	0.997	Leading	20.31	0.999	Leading	12.97
11	FLT11-3PH	0.997	Leading	20.30	0.996	Leading	22.98	0.997	Leading	19.91	0.997	Leading	20.26	0.999	Leading	11.80
12	FLT12-3PH	0.997	Leading	19.98	0.996	Leading	22.97	0.997	Leading	20.40	0.997	Leading	20.23	0.999	Leading	12.62
13	FLT13-3PH	0.997	Leading	20.19	0.996	Leading	23.50	0.997	Leading	20.43	0.997	Leading	20.38	0.999	Leading	13.07
14	FLT14-3PH	0.997	Leading	17.94	0.996	Leading	21.96	0.997	Leading	20.59	0.997	Leading	20.09	0.999	Leading	11.55
15	FLT15-3PH	0.996	Leading	22.40	0.995	Leading	24.48	0.997	Leading	20.42	0.997	Leading	20.00	0.999	Leading	12.41
16	FLT16-3PH	0.997	Leading	20.49	0.996	Leading	23.46	0.997	Leading	20.42	0.997	Leading	20.26	0.999	Leading	12.75
17	FLT22-3PH	0.997	Leading	20.58	0.996	Leading	23.52	0.997	Leading	20.35	0.997	Leading	20.19	0.999	Leading	12.65
18	FLT23-3PH	0.997	Leading	20.56	0.996	Leading	23.53	0.997	Leading	20.31	0.997	Leading	20.15	0.999	Leading	12.62
19	FLT24-3PH	0.997	Leading	20.29	0.996	Leading	23.35	0.997	Leading	20.47	0.997	Leading	20.38	0.999	Leading	13.00
20	FLT25-3PH	0.997	Leading	20.52	0.996	Leading	23.48	0.997	Leading	20.42	0.997	Leading	20.24	0.999	Leading	12.69
21	FLT28-3PH	0.997	Leading	20.75	0.996	Leading	23.50	0.997	Leading	20.37	0.997	Leading	20.21	0.999	Leading	12.69
22	FLT29-3PH	N/A	N/A	N/A	0.996	Leading	23.63	N/A	N/A	N/A	N/A	N/A	N/A	0.999	Leading	12.68
23	FLT30-3PH	N/A	N/A	N/A	0.995	Leading	23.95	N/A	N/A	N/A	N/A	N/A	N/A	0.999	Leading	12.72
24	FLT31-3PH	N/A	N/A	N/A	0.996	Leading	23.37	N/A	N/A	N/A	N/A	N/A	N/A	0.999	Leading	12.48
25	FLT33-3PH	0.996	Leading	21.06	0.995	Leading	23.89	0.997	Leading	20.43	0.997	Leading	20.24	0.999	Leading	12.69
26	FLT34-3PH	0.997	Leading	20.58	0.996	Leading	23.53	0.997	Leading	20.42	0.997	Leading	20.23	0.999	Leading	12.64
27	FLT35-3PH	0.997	Leading	20.54	0.996	Leading	23.50	0.997	Leading	20.42	0.997	Leading	20.24	0.999	Leading	12.70
28	FLT38-3PH	0.997	Leading	20.58	0.996	Leading	23.53	0.997	Leading	20.43	0.997	Leading	20.24	0.999	Leading	12.68
29	FLT42-3PH	0.997	Leading	20.58	0.996	Leading	23.52	0.997	Leading	20.41	0.997	Leading	20.22	0.999	Leading	12.61
30	FLT45-3PH	0.997	Leading	20.75	0.996	Leading	23.59	0.997	Leading	20.41	0.997	Leading	20.19	0.999	Leading	12.53
31	FLT46-3PH	0.997	Leading	20.22	0.996	Leading	23.25	0.997	Leading	20.37	0.997	Leading	20.26	0.999	Leading	12.79
32	FLT47-3PH	0.997	Leading	20.50	0.996	Leading	23.47	0.997	Leading	20.41	0.997	Leading	20.24	0.999	Leading	12.72
33	FLT48-3PH	0.997	Leading	20.35	0.995	Leading	25.00	0.997	Leading	19.87	0.998	Leading	17.74	1.000	Leading	4.91
34	FLT49-3PH	0.998	Lagging	-16.09	1.000	Lagging	-2.54	0.998	Leading	14.29	0.997	Leading	18.43	0.998	Leading	14.29
35	FLT50-3PH	0.996	Leading	21.62	0.995	Leading	25.32	0.998	Leading	17.62	0.997	Leading	18.24	1.000	Leading	5.76
36	FLT51-3PH	0.997	Leading	17.86	0.996	Leading	22.78	0.997	Leading	20.34	0.997	Leading	20.21	0.999	Leading	12.80
38	FLT53-3PH	0.997	Leading	20.34	0.995	Leading	24.58	0.997	Leading	20.37	0.997	Leading	19.66	0.999	Leading	11.09
40	FLT55-3PH	0.998	Leading	17.01	0.996	Leading	22.36	0.997	Leading	20.17	0.997	Leading	20.20	0.999	Leading	12.88
41	FLT56-3PH	0.997	Leading	20.43	0.996	Leading	23.54	0.997	Leading	20.41	0.997	Leading	20.24	0.999	Leading	12.71
42	FLT57-3PH	0.997	Leading	20.42	0.996	Leading	23.53	0.997	Leading	20.41	0.997	Leading	20.24	0.999	Leading	12.71
43	FLT58-3PH	0.998	Leading	17.39	0.997	Leading	19.49	0.997	Leading	20.32	0.997	Leading	20.28	0.999	Leading	12.67
44	FLT59-3PH	0.997	Leading	20.48	0.996	Leading	23.49	0.997	Leading	20.39	0.997	Leading	20.24	0.999	Leading	12.68
47	FLT62-3PH	0.997	Leading	20.56	0.996	Leading	23.51	0.997	Leading	20.43	0.997	Leading	20.24	0.999	Leading	12.69
49	FLT64-3PH	0.997	Leading	20.25	0.996	Leading	23.43	0.997	Leading	20.12	0.997	Leading	20.56	0.999	Leading	12.22
51	FLT67-3PH	0.997	Leading	20.49	0.996	Leading	23.31	0.998	Leading	15.88	0.997	Leading	19.45	1.000	Leading	6.87
55	FLT71-3PH	0.997	Leading	20.46	0.996	Leading	23.49	0.997	Leading	20.42	0.997	Leading	20.25	0.999	Leading	12.70
56	FLT72-3PH	0.997	Leading	20.43	0.996	Leading	23.47	0.997	Leading	20.42	0.997	Leading	20.26	0.999	Leading	12.71
57	FLT73-3PH	0.997	Leading	20.51	0.996	Leading	23.21	0.997	Leading	20.38	0.997	Leading	20.18	0.999	Leading	12.69
58	FLT74-3PH	0.997	Leading	20.54	0.996	Leading	23.49	0.997	Leading	20.42	0.997	Leading	20.22	0.999	Leading	12.70
59	FLT75-3PH	0.997	Leading	20.55	0.996	Leading	23.55	0.997	Leading	20.43	0.997	Leading	20.23	0.999	Leading	12.66
60	FLT76-3PH	0.997	Leading	20.51	0.996	Leading	23.55	0.997	Leading	20.43	0.997	Leading	20.24	0.999	Leading	12.69
61	FLT77-3PH	0.997	Leading	20.26	0.996	Leading	23.45	0.997	Leading	20.41	0.997	Leading	20.22	0.999	Leading	12.66
62	FLT78-3PH	0.997	Leading	20.55	0.996	Leading	23.55	0.997	Leading	20.44	0.997	Leading	20.24	0.999	Leading	12.73
63	FLT79-3PH	0.997	Leading	20.60	0.996	Leading	23.55	0.997	Leading	20.43	0.997	Leading	20.25	0.999	Leading	12.70
64	FLT80-3PH	0.997	Leading	20.33	0.996	Leading	23.29	0.997	Leading	20.42	0.997	Leading	20.24	0.999	Leading	12.68
65	FLT81-3PH	0.997	Leading	20.64	0.996	Leading	23.54	0.997	Leading	20.41	0.997	Leading	20.23	0.999	Leading	12.63
66	FLT82-3PH	0.997	Leading	20.54	0.996	Leading	23.39	0.997	Leading	20.40	0.997	Leading	20.25	0.999	Leading	12.70
67	FLT88-3PH	0.997	Leading	20.39	0.996	Leading	23.38	0.997	Leading	20.41	0.997	Leading	20.13	0.999	Leading	12.57
68	FLT90-3PH	0.997	Leading	20.22	0.996	Leading	23.86	0.997	Leading	20.03	0.997	Leading	19.92	0.999	Leading	11.16
69	FLT91-3PH	0.997	Leading	20.00	0.996	Leading	23.36	0.997	Leading	20.41	0.997	Leading	20.23	0.999	Leading	12.70
70	FLT93-3PH	0.997	Leading	20.54	0.996	Leading	23.47	0.997	Leading	20.43	0.997	Leading	20.24	0.999	Leading	12.69
71	FLT94-3PH	0.997	Leading	20.58	0.996	Leading	23.53	0.997	Leading	20.43	0.997	Leading	20.24	0.999	Leading	12.69
72	FLT95-3PH	0.997	Leading	20.45	0.996	Leading	23.41	0.997	Leading	20.38	0.997	Leading	20.25	0.999	Leading	12.65
73	FLT96-3PH	0.997	Leading	20.56	0.996	Leading	23.51	0.997	Leading	20.43	0.997	Leading	20.24	0.999	Leading	12.69
74	FLT97-3PH	0.997	Leading	20.10	0.996	Leading	23.21	0.997	Leading	19.89	0.997	Leading	19.99	0.999	Leading	12.27

Table 5-5 (Continued)
Power Factor Analysis: GEN-2015-010

Ref No.	Case	2015 Summer Peak			2015 Winter Peak			2020 Summer Peak			2020 Winter Peak			2025 Summer Peak		
		Power Factor		Q (MVAR)	Power Factor		Q (MVAR)	Power Factor		Q (MVAR)	Power Factor		Q (MVAR)	Power Factor		Q (MVAR)
76	FLT99-3PH	0.970	Leading	63.16	0.958	Leading	75.03	0.969	Leading	63.89	0.968	Leading	64.96	0.981	Leading	48.99
77	FLT100-3PH	0.997	Leading	18.25	0.996	Leading	21.09	0.997	Leading	18.21	0.997	Leading	18.03	0.999	Leading	10.92
78	FLT101-3PH	0.996	Leading	21.19	0.996	Leading	23.66	0.997	Leading	20.89	0.997	Leading	20.41	0.999	Leading	13.61
79	FLT102-3PH	0.997	Leading	18.25	0.996	Leading	21.09	0.997	Leading	18.21	0.997	Leading	18.03	0.999	Leading	10.92
80	FLT103-3PH	0.999	Leading	11.15	0.999	Leading	12.09	0.999	Leading	10.96	1.000	Leading	5.80	1.000	Leading	1.33
81	FLT104-3PH	0.997	Leading	20.56	0.996	Leading	23.51	0.997	Leading	20.43	0.997	Leading	20.24	0.999	Leading	12.69
82	FLT105-3PH	0.998	Leading	14.42	0.998	Leading	15.66	0.998	Leading	15.42	0.998	Leading	13.85	1.000	Leading	6.83
83	FLT106-3PH	0.996	Leading	21.11	0.987	Leading	40.37	0.995	Leading	24.76	0.991	Leading	34.43	0.999	Leading	13.56
84	FLT107-3PH	0.997	Leading	20.03	0.996	Leading	22.47	0.997	Leading	19.96	0.997	Leading	19.36	0.999	Leading	12.50
85	FLT108-3PH	0.997	Leading	20.45	0.994	Leading	27.40	0.995	Leading	24.17	0.997	Leading	20.22	0.999	Leading	12.52
87	FLT116-3PH	0.997	Leading	20.16	0.996	Leading	23.11	0.997	Leading	20.27	0.997	Leading	20.24	0.999	Leading	12.80
88	FLT117-3PH	N/A	N/A	N/A	N/A	N/A	N/A	0.997	Leading	19.85	0.997	Leading	20.41	0.999	Leading	12.81
89	FLT122-3PH	0.996	Leading	23.43	0.993	Leading	29.39	0.996	Leading	21.51	0.995	Leading	24.94	0.999	Leading	10.63
90	FLT123-3PH	0.999	Leading	11.48	0.997	Leading	18.31	0.998	Leading	15.69	0.997	Leading	19.12	0.999	Leading	9.86
91	FLT125-3PH	0.997	Leading	20.05	0.995	Leading	24.59	0.997	Leading	20.02	0.997	Leading	20.30	0.999	Leading	12.46
92	FLT126-3PH	0.997	Leading	20.39	0.996	Leading	23.26	0.997	Leading	20.35	0.997	Leading	20.33	0.999	Leading	12.57
93	FLT129-3PH	N/A	N/A	N/A	N/A	N/A	N/A	N/A	N/A	N/A	N/A	N/A	N/A	0.999	Leading	12.15
94	FLT130-3PH	0.997	Leading	20.44	0.996	Leading	23.46	0.998	Leading	17.53	0.997	Leading	20.22	N/A	N/A	N/A
95	FLT132-3PH	0.997	Leading	20.08	0.996	Leading	23.39	0.997	Leading	20.42	0.997	Leading	20.24	0.999	Leading	12.73
96	FLT133-3PH	0.997	Leading	19.90	0.996	Leading	23.30	0.997	Leading	20.42	0.997	Leading	20.25	0.999	Leading	12.76
97	FLT134-3PH	0.997	Leading	20.15	0.996	Leading	23.42	0.997	Leading	20.42	0.997	Leading	20.23	0.999	Leading	12.70
98	FLT135-3PH	0.997	Leading	20.51	0.996	Leading	23.50	0.997	Leading	20.40	0.997	Leading	20.24	0.999	Leading	12.68
99	FLT136-3PH	0.997	Leading	20.56	0.996	Leading	23.51	0.997	Leading	20.41	0.997	Leading	20.24	0.999	Leading	12.67
100	FLT137-3PH	0.997	Leading	20.56	0.996	Leading	23.50	0.997	Leading	20.43	0.997	Leading	20.24	0.999	Leading	12.70
101	FLT138-3PH	0.997	Leading	20.46	0.996	Leading	23.45	0.997	Leading	20.37	0.997	Leading	20.23	0.999	Leading	12.67
102	FLT139-3PH	0.997	Leading	20.54	0.996	Leading	23.54	0.997	Leading	20.43	0.997	Leading	20.25	0.999	Leading	12.70
103	FLT140-3PH	0.997	Leading	19.85	0.996	Leading	23.27	0.997	Leading	20.38	0.997	Leading	20.22	0.999	Leading	12.63
104	FLT141-3PH	0.997	Leading	20.58	0.996	Leading	23.52	0.997	Leading	20.39	0.997	Leading	20.22	0.999	Leading	12.57
105	FLT142-3PH	0.997	Leading	19.77	0.996	Leading	23.02	0.997	Leading	20.37	0.997	Leading	20.22	0.999	Leading	12.64
106	FLT143-3PH	0.997	Leading	19.55	0.996	Leading	23.07	0.997	Leading	20.32	0.997	Leading	20.23	0.999	Leading	12.65
107	FLT144-3PH	0.997	Leading	20.58	0.996	Leading	23.61	0.997	Leading	20.49	0.997	Leading	20.21	0.999	Leading	12.72
108	FLT145-3PH	0.997	Leading	20.40	0.996	Leading	23.48	0.997	Leading	20.42	0.997	Leading	20.25	0.999	Leading	12.71
109	FLT146-3PH	0.997	Leading	20.05	0.996	Leading	23.40	0.997	Leading	20.37	0.997	Leading	20.24	0.999	Leading	12.74
110	FLT147-3PH	0.997	Leading	20.46	0.996	Leading	23.52	0.997	Leading	20.44	0.997	Leading	20.23	0.999	Leading	12.68
111	FLT148-3PH	0.997	Leading	20.55	0.996	Leading	23.51	0.997	Leading	20.42	0.997	Leading	20.24	0.999	Leading	12.68
112	FLT148-3PH	0.996	Leading	22.81	0.994	Leading	26.85	0.996	Leading	23.59	0.996	Leading	23.68	0.999	Leading	11.75
113	FLT150-3PH	0.997	Leading	18.17	0.995	Leading	25.75	0.996	Leading	22.06	0.997	Leading	18.90	0.999	Leading	10.55
114	FLT151-3PH	0.998	Leading	14.14	0.996	Leading	21.67	0.999	Leading	13.28	0.998	Leading	14.13	1.000	Leading	5.23
115	FLT152-3PH	0.995	Leading	24.93	0.995	Leading	24.12	0.995	Leading	24.73	0.997	Leading	20.19	0.999	Leading	13.32
116	FLT153-3PH	0.997	Leading	19.01	0.996	Leading	22.42	0.997	Leading	19.09	0.997	Leading	19.26	0.999	Leading	11.14
117	FLT154-3PH	0.997	Leading	18.25	0.996	Leading	21.09	0.997	Leading	18.21	0.997	Leading	18.03	0.999	Leading	10.92
118	FLT155-3PH	0.998	Leading	14.16	0.999	Leading	12.89	0.998	Leading	16.19	0.999	Leading	11.96	0.999	Leading	11.74
119	FLT156-3PH	0.997	Leading	20.38	0.996	Leading	23.61	0.995	Leading	24.11	0.997	Leading	20.46	0.999	Leading	12.70
120	FLT157-3PH	0.996	Leading	22.73	0.996	Leading	21.14	0.997	Leading	18.45	0.997	Leading	18.17	0.999	Leading	10.89
121	FLT158-3PH	0.996	Leading	22.97	0.996	Leading	21.64	0.997	Leading	18.70	0.997	Leading	18.58	0.999	Leading	11.07
122	FLT159-3PH	0.990	Leading	35.00	0.991	Leading	33.32	0.990	Leading	36.09	0.993	Leading	30.34	0.994	Leading	28.01
123	FLT160-3PH	0.992	Leading	32.74	0.995	Leading	25.55	0.989	Leading	36.68	0.996	Leading	22.37	0.996	Leading	23.13
124	FLT161-3PH	0.997	Leading	19.58	0.996	Leading	22.74	0.997	Leading	20.09	0.997	Leading	19.89	0.999	Leading	12.22
125	FLT162-3PH	0.996	Leading	21.91	0.998	Leading	16.06	0.995	Leading	24.40	0.998	Leading	14.41	0.997	Leading	18.61
126	FLT163-3PH	0.997	Leading	20.56	0.998	Leading	14.63	0.998	Leading	14.99	0.998	Leading	16.33	1.000	Leading	6.07
127	FLT164-3PH	0.997	Leading	20.56	0.998	Leading	14.36	0.998	Leading	13.86	0.998	Leading	16.03	1.000	Leading	4.78
128	FLT165-3PH	0.996	Leading	22.29	0.997	Leading	19.34	0.994	Leading	26.50	0.999	Leading	11.57	1.000	Lagging	-0.24
129	FLT166-3PH	0.997	Leading	18.11	0.994	Leading	27.86	0.995	Leading	24.58	0.995	Leading	25.88	0.999	Leading	13.73
130	FLT167-3PH	0.997	Leading	20.56	0.996	Leading	23.51	0.997	Leading	20.43	0.997	Leading	20.24	0.999	Leading	12.69
131	FLT168-3PH	0.990	Leading	36.03	0.989	Leading	36.63	0.990	Leading	36.09	0.992	Leading	30.93	0.994	Leading	28.65
132	FLT169-3PH	0.997	Leading	20.56	0.996	Leading	23.51	0.997	Leading	20.43	0.997	Leading	20.24	0.999	Leading	12.69
133	FLT170-3PH	0.991	Leading	33.61	0.983	Leading	47.49	0.985	Leading	43.39	0.971	Leading	62.03	0.991	Leading	33.77
134	FLT171-3PH	0.997	Leading	20.56	0.996	Leading	23.51	0.997	Leading	20.43	0.997	Leading	20.24	0.999	Leading	12.69
135	FLT172-3PH	0.997	Leading	20.28	0.996	Leading	23.44	0.997	Leading	20.14	0.997	Leading	20.54	0.999	Leading	12.26
136	FLT173-3PH	0.997	Leading	20.56	0.996	Leading	23.51	0.997	Leading	20.43	0.997	Leading	20.24	0.999	Leading	12.69
137	FLT174-3PH	0.997	Leading	20.42	0.996	Leading	23.48	0.997	Leading	20.30	0.997	Leading	20.29	0.999	Leading	12.60
138	FLT175-3PH	0.997	Leading	20.49	0.996	Leading	23.41	0.997	Leading	20.33	0.997	Leading	20.15	0.999	Leading	12.58
139	FLT176-3PH	0.997	Leading	20.33	0.996	Leading	23.45	0.997	Leading	20.18	0.997	Leading	20.11	0.999	Leading	12.50
140	FLT177-3PH	0.997	Leading	20.58	0.996	Leading	23.49	0.997	Leading	20.45	0.997	Leading	20.24	0.999	Leading	12.70
141	FLT178-3PH	0.997	Leading	20.56	0.996	Leading	23.48	0.997	Leading	20.44	0.997	Leading	20.24	0.999	Leading	12.70
142	FLT179-3PH	0.997	Leading	20.61	0.996	Leading	23.52	0.997	Leading	20.43	0.997	Leading	20.21	0.999	Leading	12.74

Table 5-5 (Continued)
Power Factor Analysis: GEN-2015-010

Ref No.	Case	2015 Summer Peak			2015 Winter Peak			2020 Summer Peak			2020 Winter Peak			2025 Summer Peak		
		Power Factor		Q (MVAR)	Power Factor		Q (MVAR)	Power Factor		Q (MVAR)	Power Factor		Q (MVAR)	Power Factor		Q (MVAR)
143	FLT180-3PH	0.997	Leading	20.35	0.996	Leading	23.27	0.997	Leading	20.24	0.997	Leading	19.99	0.999	Leading	12.63
144	FLT181-3PH	0.997	Leading	20.56	0.996	Leading	23.51	0.997	Leading	20.43	0.997	Leading	20.24	0.999	Leading	12.69
145	FLT182-3PH	0.997	Leading	20.63	0.996	Leading	23.53	0.997	Leading	20.47	0.997	Leading	20.25	0.999	Leading	12.73
146	FLT183-3PH	0.997	Leading	20.10	0.996	Leading	22.82	0.997	Leading	19.97	0.997	Leading	19.66	0.999	Leading	12.01
147	FLT184-3PH	0.997	Leading	20.50	0.996	Leading	23.51	0.997	Leading	20.37	0.997	Leading	20.17	0.999	Leading	12.65
148	FLT185-3PH	0.997	Leading	20.54	0.996	Leading	23.54	0.997	Leading	20.40	0.997	Leading	20.30	0.999	Leading	12.53
149	FLT186-3PH	0.997	Leading	20.57	0.996	Leading	23.42	0.997	Leading	20.42	0.997	Leading	20.22	0.999	Leading	12.66
150	FLT187-3PH	0.997	Leading	20.57	0.996	Leading	23.36	0.997	Leading	20.42	0.997	Leading	20.18	0.999	Leading	12.64
151	FLT188-3PH	0.997	Leading	20.56	0.996	Leading	23.51	0.997	Leading	20.43	0.997	Leading	20.24	0.999	Leading	12.69
152	FLT189-3PH	0.997	Leading	20.56	0.996	Leading	23.50	0.997	Leading	20.42	0.997	Leading	20.24	0.999	Leading	12.69
153	FLT190-3PH	0.997	Leading	20.55	0.996	Leading	23.50	0.997	Leading	20.42	0.997	Leading	20.25	0.999	Leading	12.69
154	FLT191-3PH	0.997	Leading	20.49	0.996	Leading	23.41	0.997	Leading	20.37	0.997	Leading	20.26	0.999	Leading	12.67
155	FLT192-3PH	0.997	Leading	19.80	0.996	Leading	23.30	0.997	Leading	19.46	0.997	Leading	20.07	0.999	Leading	11.71
156	FLT193-3PH	0.997	Leading	20.56	0.996	Leading	23.51	0.997	Leading	20.43	0.997	Leading	20.24	0.999	Leading	12.69
157	FLT194-3PH	0.997	Leading	20.40	0.996	Leading	23.38	0.997	Leading	20.23	0.997	Leading	20.21	0.999	Leading	12.51
158	FLT195-3PH	0.997	Leading	20.10	0.996	Leading	23.21	0.997	Leading	19.89	0.997	Leading	19.99	0.999	Leading	12.27
159	FLT196-3PH	0.997	Leading	20.50	0.996	Leading	23.58	0.997	Leading	20.31	0.997	Leading	20.13	0.999	Leading	12.46
160	FLT197-3PH	0.997	Leading	20.45	0.996	Leading	23.69	0.997	Leading	20.03	0.997	Leading	20.26	0.999	Leading	12.65
161	FLT198-3PH	0.997	Leading	20.67	0.996	Leading	23.64	0.997	Leading	20.46	0.997	Leading	20.09	0.999	Leading	12.58
162	FLT199-3PH	0.997	Leading	19.83	0.996	Leading	23.12	0.997	Leading	20.35	0.997	Leading	20.34	0.999	Leading	12.87
163	FLT200-3PH	0.997	Leading	20.62	0.996	Leading	23.62	0.997	Leading	20.45	0.997	Leading	20.10	0.999	Leading	12.60
164	FLT201-3PH	0.997	Leading	20.27	0.996	Leading	23.49	0.997	Leading	20.25	0.997	Leading	20.21	0.999	Leading	12.49
165	FLT202-3PH	0.997	Leading	20.60	0.996	Leading	23.63	0.997	Leading	20.45	0.997	Leading	20.11	0.999	Leading	12.62
166	FLT203-3PH	0.997	Leading	20.08	0.996	Leading	23.28	0.997	Leading	20.31	0.997	Leading	20.26	0.999	Leading	12.82
167	FLT204-3PH	0.997	Leading	20.09	0.996	Leading	23.28	0.997	Leading	20.35	0.997	Leading	20.33	0.999	Leading	12.75
168	FLT205-3PH	0.997	Leading	20.55	0.996	Leading	23.51	0.997	Leading	20.42	0.997	Leading	20.24	0.999	Leading	12.68
169	FLT206-3PH	0.997	Leading	20.27	0.996	Leading	23.35	0.997	Leading	20.07	0.997	Leading	19.94	0.999	Leading	11.62
170	FLT207-3PH	0.997	Leading	20.71	0.996	Leading	23.77	0.997	Leading	20.66	0.997	Leading	20.29	0.999	Leading	12.71
171	FLT208-3PH	0.997	Leading	20.57	0.996	Leading	23.33	0.997	Leading	20.01	0.997	Leading	20.21	0.999	Leading	11.96
172	FLT209-3PH	0.996	Leading	21.09	0.995	Leading	24.60	0.997	Leading	20.25	0.997	Leading	19.68	0.999	Leading	11.19
173	FLT210-3PH	0.997	Leading	18.89	0.996	Leading	23.58	0.997	Leading	20.47	0.997	Leading	19.98	0.999	Leading	12.34
174	FLT211-3PH	0.997	Leading	20.32	0.996	Leading	23.42	0.997	Leading	20.38	0.997	Leading	20.24	0.999	Leading	12.72
175	FLT212-3PH	0.997	Leading	20.62	0.996	Leading	23.62	0.997	Leading	20.45	0.997	Leading	20.24	0.999	Leading	12.69
176	FLT213-3PH	0.997	Leading	20.57	0.996	Leading	23.51	0.997	Leading	20.42	0.997	Leading	20.24	0.999	Leading	12.68
177	FLT214-3PH	0.997	Leading	18.82	0.996	Leading	22.11	0.997	Leading	20.36	0.997	Leading	19.68	0.999	Leading	11.50
178	FLT215-3PH	0.997	Leading	19.44	0.996	Leading	22.60	0.998	Leading	17.65	0.997	Leading	19.87	0.999	Leading	12.14
179	FLT216-3PH	0.998	Leading	17.70	0.996	Leading	22.16	0.998	Leading	15.96	0.997	Leading	19.71	0.999	Leading	9.70
180	FLT217-3PH	0.997	Leading	20.55	0.996	Leading	23.51	0.997	Leading	20.34	0.997	Leading	20.24	0.999	Leading	12.68
181	FLT218-3PH	0.997	Leading	20.40	0.996	Leading	23.39	0.997	Leading	20.33	0.997	Leading	20.20	0.999	Leading	12.67
182	FLT219-3PH	0.997	Leading	20.54	0.996	Leading	23.50	0.997	Leading	20.41	0.997	Leading	20.24	0.999	Leading	12.69
183	FLT220-3PH	1.000	Lagging	-5.35	0.997	Lagging	-18.10	0.998	Lagging	-14.03	0.991	Lagging	-34.48	0.999	Lagging	-10.45
184	FLT221-3PH	N/A	N/A	N/A	0.996	Leading	22.63	N/A	N/A	N/A	0.997	Leading	19.91	0.999	Leading	11.99
186	FLT223-3PH	0.997	Leading	20.36	0.996	Leading	23.38	N/A	N/A	N/A	0.997	Leading	20.15	N/A	N/A	N/A
187	FLT224-3PH	0.997	Leading	20.40	0.996	Leading	23.30	N/A	N/A	N/A	0.997	Leading	20.15	N/A	N/A	N/A
188	FLT225-3PH	0.997	Leading	20.46	0.996	Leading	23.50	N/A	N/A	N/A	0.997	Leading	20.25	N/A	N/A	N/A

Study Generator GEN-2015-010

The Power Factor Analysis shows that GEN-2015-010 has a power factor range of 0.998 lagging (supplying) to 0.970 leading (absorbing) for the 2015 Summer Peak conditions, a power factor range of 0.997 lagging (supplying) to 0.959 leading (absorbing) for the 2015 Winter Peak conditions, a power factor range of 0.995 lagging (supplying) to 0.969 leading (absorbing) for the 2020 Summer Peak conditions, a power factor range of 0.991 lagging (supplying) to 0.968 leading (absorbing) for the 2020 Winter Peak conditions, and a power factor range of 0.991 lagging (supplying) to 0.981 leading (absorbing) for the 2025 Summer Peak conditions.

Table 5-6
Power Factor Analysis: GEN-2015-014

Ref No.	Case	2015 Summer Peak			2015 Winter Peak			2020 Summer Peak			2020 Winter Peak			2025 Summer Peak		
		Power Factor		Q (MVAR)	Power Factor		Q (MVAR)	Power Factor		Q (MVAR)	Power Factor		Q (MVAR)	Power Factor		Q (MVAR)
0	Base	0.976	Leading	33.30	0.976	Leading	33.54	0.967	Leading	39.56	0.976	Leading	33.69	0.969	Leading	38.01
1	FLT01-3PH	0.976	Leading	33.38	0.976	Leading	33.56	0.967	Leading	39.56	0.976	Leading	33.67	0.969	Leading	37.99
2	FLT02-3PH	0.976	Leading	33.38	0.976	Leading	33.56	0.967	Leading	39.56	0.976	Leading	33.67	0.969	Leading	37.99
3	FLT03-3PH	0.976	Leading	33.27	0.976	Leading	33.52	0.967	Leading	39.56	0.976	Leading	33.69	0.969	Leading	38.01
4	FLT04-3PH	0.976	Leading	33.38	0.976	Leading	33.58	0.967	Leading	39.55	0.976	Leading	33.62	0.969	Leading	37.93
5	FLT05-3PH	0.975	Leading	34.43	0.975	Leading	33.94	0.967	Leading	39.72	0.977	Leading	32.72	0.971	Leading	37.17
6	FLT06-3PH	0.974	Leading	34.79	0.975	Leading	34.22	0.967	Leading	39.75	0.977	Leading	32.87	0.970	Leading	37.56
7	FLT07-3PH	0.976	Leading	33.38	0.976	Leading	33.57	0.967	Leading	39.55	0.976	Leading	33.63	0.969	Leading	37.94
8	FLT08-3PH	0.976	Leading	33.20	0.975	Leading	34.05	0.966	Leading	39.95	0.977	Leading	32.45	0.971	Leading	36.80
9	FLT09-3PH	0.979	Leading	31.53	0.976	Leading	33.20	0.967	Leading	39.33	0.976	Leading	33.64	0.969	Leading	38.03
10	FLT10-3PH	0.976	Leading	33.54	0.976	Leading	33.77	0.967	Leading	39.56	0.976	Leading	33.32	0.970	Leading	37.62
11	FLT11-3PH	0.976	Leading	33.28	0.976	Leading	33.50	0.967	Leading	39.51	0.976	Leading	33.68	0.969	Leading	37.93
12	FLT12-3PH	0.976	Leading	33.12	0.976	Leading	33.45	0.967	Leading	39.51	0.976	Leading	33.63	0.970	Leading	37.89
13	FLT13-3PH	0.976	Leading	33.21	0.976	Leading	33.55	0.968	Leading	39.06	0.976	Leading	33.18	0.971	Leading	37.21
14	FLT14-3PH	0.978	Leading	31.70	0.977	Leading	32.95	0.968	Leading	39.12	0.976	Leading	33.65	0.970	Leading	37.57
15	FLT15-3PH	0.978	Leading	31.69	0.977	Leading	33.07	0.968	Leading	38.65	0.976	Leading	33.38	0.971	Leading	36.74
16	FLT16-3PH	0.976	Leading	33.43	0.976	Leading	33.60	0.967	Leading	39.60	0.976	Leading	33.68	0.969	Leading	38.03
17	FLT22-3PH	0.976	Leading	33.31	0.976	Leading	33.53	0.967	Leading	39.65	0.976	Leading	33.78	0.969	Leading	38.15
18	FLT23-3PH	0.976	Leading	33.30	0.976	Leading	33.55	0.967	Leading	39.59	0.976	Leading	33.69	0.969	Leading	38.04
19	FLT24-3PH	0.976	Leading	33.39	0.976	Leading	33.56	0.967	Leading	39.71	0.976	Leading	33.78	0.970	Leading	37.79
20	FLT25-3PH	0.976	Leading	33.28	0.976	Leading	33.53	0.967	Leading	39.56	0.976	Leading	33.69	0.969	Leading	38.01
21	FLT28-3PH	0.976	Leading	33.18	0.976	Leading	33.52	0.967	Leading	39.45	0.976	Leading	33.59	0.970	Leading	37.88
22	FLT29-3PH	N/A	N/A	N/A	0.976	Leading	33.52	N/A	N/A	N/A	N/A	N/A	N/A	0.969	Leading	37.96
23	FLT30-3PH	N/A	N/A	N/A	0.976	Leading	33.45	N/A	N/A	N/A	N/A	N/A	N/A	0.969	Leading	37.95
24	FLT31-3PH	N/A	N/A	N/A	0.976	Leading	33.49	N/A	N/A	N/A	N/A	N/A	N/A	0.969	Leading	38.46
25	FLT33-3PH	0.977	Leading	32.89	0.976	Leading	33.35	0.967	Leading	39.56	0.976	Leading	33.69	0.969	Leading	38.01
26	FLT34-3PH	0.976	Leading	33.28	0.976	Leading	33.54	0.967	Leading	39.39	0.976	Leading	33.61	0.970	Leading	37.76
27	FLT35-3PH	0.976	Leading	33.32	0.976	Leading	33.54	0.967	Leading	39.53	0.976	Leading	33.67	0.969	Leading	37.93
28	FLT38-3PH	0.976	Leading	33.28	0.976	Leading	33.52	0.967	Leading	39.55	0.976	Leading	33.66	0.969	Leading	38.00
29	FLT42-3PH	0.976	Leading	33.21	0.976	Leading	33.48	0.967	Leading	39.28	0.976	Leading	33.56	0.970	Leading	37.55
30	FLT45-3PH	0.977	Leading	33.05	0.976	Leading	33.45	0.967	Leading	39.34	0.976	Leading	33.59	0.970	Leading	37.80
31	FLT46-3PH	0.977	Leading	32.38	0.978	Leading	32.08	0.968	Leading	38.72	0.977	Leading	32.86	0.971	Leading	36.95
32	FLT47-3PH	0.977	Leading	33.10	0.976	Leading	33.26	0.967	Leading	39.34	0.976	Leading	33.48	0.970	Leading	37.66
33	FLT48-3PH	0.976	Leading	33.19	0.975	Leading	34.03	0.966	Leading	39.94	0.977	Leading	32.43	0.971	Leading	36.79
34	FLT49-3PH	0.990	Leading	21.77	0.983	Leading	27.64	0.969	Leading	37.94	0.975	Leading	34.42	0.969	Leading	38.32
35	FLT50-3PH	0.975	Leading	34.13	0.976	Leading	33.16	0.969	Leading	38.56	0.978	Leading	31.75	0.972	Leading	36.14
36	FLT51-3PH	0.985	Leading	26.21	0.978	Leading	31.62	0.969	Leading	37.93	0.977	Leading	33.02	0.970	Leading	37.61
38	FLT53-3PH	0.980	Leading	30.62	0.980	Leading	30.39	0.969	Leading	38.35	0.979	Leading	31.06	0.972	Leading	36.56
40	FLT55-3PH	0.994	Leading	16.41	0.982	Leading	29.23	0.973	Leading	35.52	0.977	Leading	33.00	0.974	Leading	34.94
41	FLT56-3PH	0.979	Leading	30.90	0.976	Leading	33.39	0.969	Leading	38.27	0.976	Leading	33.35	0.971	Leading	36.66
42	FLT57-3PH	0.980	Leading	30.68	0.976	Leading	33.12	0.969	Leading	38.05	0.976	Leading	33.16	0.972	Leading	36.47
43	FLT58-3PH	0.981	Leading	30.00	0.984	Leading	27.28	0.970	Leading	37.68	0.978	Leading	31.92	0.973	Leading	35.35
44	FLT59-3PH	0.983	Leading	28.19	0.979	Leading	31.10	0.974	Leading	34.94	0.979	Leading	31.10	0.979	Leading	31.39
47	FLT62-3PH	0.976	Leading	33.30	0.976	Leading	33.54	0.967	Leading	39.56	0.976	Leading	33.69	0.969	Leading	38.01
49	FLT64-3PH	0.978	Leading	31.85	0.978	Leading	32.21	0.968	Leading	38.93	0.976	Leading	33.68	0.969	Leading	37.99
51	FLT67-3PH	0.988	Leading	23.84	0.980	Leading	30.83	0.979	Leading	31.26	0.977	Leading	32.97	0.984	Leading	27.58
55	FLT71-3PH	0.976	Leading	33.63	0.976	Leading	33.59	0.967	Leading	39.78	0.976	Leading	33.80	0.969	Leading	38.54
56	FLT72-3PH	0.975	Leading	33.95	0.976	Leading	33.77	0.966	Leading	40.00	0.975	Leading	33.93	0.968	Leading	38.83
57	FLT73-3PH	0.976	Leading	33.29	0.976	Leading	33.30	0.967	Leading	39.74	0.976	Leading	33.63	0.969	Leading	38.21
58	FLT74-3PH	0.976	Leading	33.35	0.976	Leading	33.49	0.967	Leading	39.60	0.976	Leading	33.59	0.969	Leading	38.07
59	FLT75-3PH	0.977	Leading	32.79	0.977	Leading	33.01	0.968	Leading	39.07	0.976	Leading	33.40	0.970	Leading	37.67
60	FLT76-3PH	0.976	Leading	33.51	0.976	Leading	33.57	0.967	Leading	39.60	0.976	Leading	33.64	0.969	Leading	38.00
61	FLT77-3PH	0.980	Leading	30.52	0.978	Leading	31.81	0.969	Leading	38.27	0.977	Leading	32.57	0.971	Leading	36.95
62	FLT78-3PH	0.975	Leading	34.45	0.974	Leading	34.57	0.965	Leading	40.72	0.976	Leading	33.56	0.966	Leading	39.89
63	FLT79-3PH	0.976	Leading	33.28	0.976	Leading	33.46	0.966	Leading	39.88	0.976	Leading	33.82	0.969	Leading	38.48
64	FLT80-3PH	0.975	Leading	34.39	0.975	Leading	34.34	0.967	Leading	39.77	0.975	Leading	33.88	0.970	Leading	37.49
65	FLT81-3PH	0.980	Leading	30.51	0.980	Leading	30.64	0.968	Leading	38.70	0.976	Leading	33.19	0.972	Leading	36.50
66	FLT82-3PH	0.977	Leading	32.86	0.976	Leading	33.27	0.967	Leading	39.26	0.976	Leading	33.65	0.970	Leading	37.69
67	FLT88-3PH	0.976	Leading	33.58	0.976	Leading	33.75	0.967	Leading	39.56	0.976	Leading	33.33	0.969	Leading	37.97
68	FLT90-3PH	0.983	Leading	27.84	0.982	Leading	28.92	0.969	Leading	38.03	0.978	Leading	31.75	0.972	Leading	36.47
69	FLT91-3PH	0.974	Leading	34.88	0.975	Leading	33.96	0.967	Leading	39.53	0.976	Leading	33.68	0.969	Leading	38.13
70	FLT93-3PH	0.976	Leading	33.18	0.976	Leading	33.39	0.967	Leading	39.53	0.976	Leading	33.65	0.969	Leading	37.98
71	FLT94-3PH	0.976	Leading	33.14	0.976	Leading	33.80	0.967	Leading	39.44	0.976	Leading	33.37	0.969	Leading	37.93
72	FLT95-3PH	0.977	Leading	33.05	0.976	Leading	33.33	0.968	Leading	39.11	0.976	Leading	33.58	0.971	Leading	36.96
73	FLT96-3PH	0.976	Leading	33.30	0.976	Leading	33.54	0.967	Leading	39.56	0.976	Leading	33.69	0.969	Leading	38.01
74	FLT97-3PH	0.976	Leading	33.50	0.976	Leading	33.58	0.967	Leading	39.47	0.976	Leading	33.63	0.969	Leading	38.03

Table 5-6 (Continued)
Power Factor Analysis: GEN-2015-014

Ref No.	Case	2015 Summer Peak			2015 Winter Peak			2020 Summer Peak			2020 Winter Peak			2025 Summer Peak		
		Power Factor		Q (MVAR)	Power Factor		Q (MVAR)	Power Factor		Q (MVAR)	Power Factor		Q (MVAR)	Power Factor		Q (MVAR)
76	FLT99-3PH	0.975	Leading	34.07	0.975	Leading	34.23	0.966	Leading	39.95	0.975	Leading	34.24	0.969	Leading	38.38
77	FLT100-3PH	0.976	Leading	33.29	0.976	Leading	33.55	0.967	Leading	39.57	0.976	Leading	33.70	0.969	Leading	38.01
78	FLT101-3PH	0.976	Leading	33.30	0.976	Leading	33.54	0.967	Leading	39.57	0.976	Leading	33.69	0.969	Leading	38.01
79	FLT102-3PH	0.976	Leading	33.29	0.976	Leading	33.55	0.967	Leading	39.57	0.976	Leading	33.70	0.969	Leading	38.01
80	FLT103-3PH	0.976	Leading	33.24	0.976	Leading	33.61	0.967	Leading	39.58	0.976	Leading	33.78	0.969	Leading	38.01
81	FLT104-3PH	0.976	Leading	33.30	0.976	Leading	33.54	0.967	Leading	39.56	0.976	Leading	33.69	0.969	Leading	38.01
82	FLT105-3PH	0.976	Leading	33.26	0.976	Leading	33.46	0.967	Leading	39.53	0.976	Leading	33.66	0.969	Leading	37.98
83	FLT106-3PH	0.976	Leading	33.23	0.976	Leading	33.46	0.967	Leading	39.54	0.976	Leading	33.67	0.969	Leading	38.02
84	FLT107-3PH	0.976	Leading	33.30	0.976	Leading	33.53	0.967	Leading	39.56	0.976	Leading	33.69	0.969	Leading	38.01
85	FLT108-3PH	0.976	Leading	33.29	0.976	Leading	33.52	0.967	Leading	39.54	0.976	Leading	33.68	0.969	Leading	38.00
87	FLT116-3PH	0.976	Leading	33.70	0.976	Leading	33.76	0.967	Leading	39.41	0.975	Leading	34.43	0.969	Leading	38.13
88	FLT117-3PH	N/A	N/A	N/A	N/A	N/A	N/A	0.970	Leading	37.83	0.975	Leading	34.44	0.970	Leading	37.35
89	FLT122-3PH	0.976	Leading	33.39	0.976	Leading	33.66	0.967	Leading	39.60	0.976	Leading	33.77	0.969	Leading	38.04
90	FLT123-3PH	0.985	Leading	25.99	0.983	Leading	28.11	0.973	Leading	35.48	0.979	Leading	31.34	0.972	Leading	36.03
91	FLT125-3PH	0.980	Leading	30.26	0.980	Leading	30.42	0.971	Leading	37.08	0.979	Leading	31.17	0.972	Leading	36.53
92	FLT126-3PH	0.977	Leading	33.09	0.976	Leading	33.68	0.967	Leading	39.51	0.976	Leading	33.64	0.969	Leading	37.99
93	FLT129-3PH	N/A	N/A	N/A	N/A	N/A	N/A	0.968	Leading	39.01	0.975	Leading	33.97	0.968	Leading	38.95
94	FLT130-3PH	0.976	Leading	33.57	0.976	Leading	33.78	N/A	N/A	N/A	N/A	N/A	N/A	N/A	N/A	N/A
95	FLT132-3PH	0.978	Leading	32.32	0.977	Leading	32.85	0.967	Leading	39.61	0.976	Leading	33.18	0.968	Leading	38.75
96	FLT133-3PH	0.973	Leading	35.43	0.974	Leading	35.13	0.965	Leading	40.56	0.976	Leading	33.78	0.966	Leading	40.05
97	FLT134-3PH	0.979	Leading	31.59	0.978	Leading	32.32	0.968	Leading	39.05	0.977	Leading	32.85	0.969	Leading	37.97
98	FLT135-3PH	0.977	Leading	33.04	0.976	Leading	33.60	0.967	Leading	39.27	0.976	Leading	33.71	0.970	Leading	37.73
99	FLT136-3PH	0.976	Leading	33.30	0.976	Leading	33.54	0.969	Leading	38.34	0.976	Leading	33.31	0.972	Leading	36.40
100	FLT137-3PH	0.976	Leading	33.31	0.976	Leading	33.49	0.967	Leading	39.65	0.975	Leading	33.84	0.969	Leading	38.25
101	FLT138-3PH	0.976	Leading	33.60	0.976	Leading	33.73	0.967	Leading	39.68	0.976	Leading	33.73	0.969	Leading	38.18
102	FLT139-3PH	0.976	Leading	33.51	0.976	Leading	33.69	0.967	Leading	39.60	0.976	Leading	33.72	0.969	Leading	38.08
103	FLT140-3PH	0.983	Leading	28.39	0.980	Leading	30.44	0.972	Leading	36.59	0.977	Leading	32.83	0.975	Leading	34.49
104	FLT141-3PH	0.978	Leading	31.94	0.977	Leading	32.64	0.970	Leading	37.48	0.977	Leading	33.03	0.974	Leading	35.01
105	FLT142-3PH	0.986	Leading	25.27	0.980	Leading	30.07	0.971	Leading	36.95	0.977	Leading	32.81	0.974	Leading	35.17
106	FLT143-3PH	0.978	Leading	31.63	0.975	Leading	34.30	0.973	Leading	35.74	0.977	Leading	32.42	0.974	Leading	34.65
107	FLT144-3PH	0.970	Leading	37.57	0.974	Leading	35.09	0.963	Leading	41.79	0.977	Leading	33.03	0.963	Leading	42.26
108	FLT145-3PH	0.978	Leading	32.24	0.977	Leading	32.99	0.968	Leading	39.13	0.976	Leading	33.43	0.970	Leading	37.67
109	FLT146-3PH	0.978	Leading	32.25	0.975	Leading	34.19	0.969	Leading	38.29	0.976	Leading	33.62	0.970	Leading	37.40
110	FLT147-3PH	0.976	Leading	33.44	0.976	Leading	33.52	0.966	Leading	39.95	0.976	Leading	33.38	0.968	Leading	38.59
111	FLT148-3PH	0.977	Leading	32.79	0.976	Leading	33.43	0.968	Leading	39.01	0.976	Leading	33.59	0.970	Leading	37.36
112	FLT148-3PH	0.976	Leading	33.27	0.976	Leading	33.51	0.967	Leading	39.53	0.976	Leading	33.66	0.969	Leading	37.99
113	FLT150-3PH	0.976	Leading	33.25	0.976	Leading	33.51	0.967	Leading	39.52	0.976	Leading	33.69	0.969	Leading	37.99
114	FLT151-3PH	0.976	Leading	33.27	0.976	Leading	33.51	0.967	Leading	39.54	0.976	Leading	33.68	0.969	Leading	38.00
115	FLT152-3PH	0.976	Leading	33.29	0.976	Leading	33.54	0.967	Leading	39.54	0.976	Leading	33.68	0.969	Leading	38.01
116	FLT153-3PH	0.976	Leading	33.30	0.976	Leading	33.53	0.967	Leading	39.56	0.976	Leading	33.68	0.969	Leading	38.00
117	FLT154-3PH	0.976	Leading	33.29	0.976	Leading	33.55	0.967	Leading	39.57	0.976	Leading	33.70	0.969	Leading	38.01
118	FLT155-3PH	0.977	Leading	32.75	0.976	Leading	33.26	0.967	Leading	39.27	0.976	Leading	33.54	0.970	Leading	37.86
119	FLT156-3PH	0.976	Leading	33.28	0.976	Leading	33.53	0.967	Leading	39.55	0.976	Leading	33.69	0.969	Leading	38.01
120	FLT157-3PH	0.976	Leading	33.28	0.976	Leading	33.56	0.967	Leading	39.58	0.976	Leading	33.70	0.969	Leading	38.02
121	FLT158-3PH	0.976	Leading	33.28	0.976	Leading	33.56	0.967	Leading	39.58	0.976	Leading	33.70	0.969	Leading	38.02
122	FLT159-3PH	0.976	Leading	33.21	0.976	Leading	33.46	0.967	Leading	39.44	0.976	Leading	33.64	0.970	Leading	37.91
123	FLT160-3PH	0.976	Leading	33.25	0.976	Leading	33.47	0.967	Leading	39.43	0.976	Leading	33.55	0.970	Leading	37.85
124	FLT161-3PH	0.976	Leading	33.30	0.976	Leading	33.53	0.967	Leading	39.56	0.976	Leading	33.69	0.969	Leading	38.01
125	FLT162-3PH	0.977	Leading	32.96	0.976	Leading	33.70	0.968	Leading	39.02	0.975	Leading	34.03	0.970	Leading	37.57
126	FLT163-3PH	0.976	Leading	33.30	0.975	Leading	33.97	0.968	Leading	38.92	0.976	Leading	33.25	0.971	Leading	37.21
127	FLT164-3PH	0.976	Leading	33.30	0.975	Leading	33.97	0.968	Leading	38.79	0.976	Leading	33.22	0.971	Leading	37.05
128	FLT165-3PH	0.979	Leading	31.01	0.977	Leading	32.70	0.967	Leading	39.38	0.975	Leading	33.90	0.969	Leading	38.07
129	FLT166-3PH	0.977	Leading	33.07	0.976	Leading	33.35	0.967	Leading	39.51	0.976	Leading	33.69	0.969	Leading	38.00
130	FLT167-3PH	0.976	Leading	33.30	0.976	Leading	33.54	0.967	Leading	39.56	0.976	Leading	33.69	0.969	Leading	38.01
131	FLT168-3PH	0.976	Leading	33.21	0.976	Leading	33.45	0.967	Leading	39.44	0.976	Leading	33.64	0.970	Leading	37.89
132	FLT169-3PH	0.976	Leading	33.30	0.976	Leading	33.54	0.967	Leading	39.56	0.976	Leading	33.69	0.969	Leading	38.01
133	FLT170-3PH	0.976	Leading	33.42	0.976	Leading	33.52	0.967	Leading	39.55	0.976	Leading	33.59	0.969	Leading	37.93
134	FLT171-3PH	0.976	Leading	33.30	0.976	Leading	33.54	0.967	Leading	39.56	0.976	Leading	33.69	0.969	Leading	38.01
135	FLT172-3PH	0.978	Leading	31.95	0.978	Leading	32.30	0.968	Leading	38.97	0.976	Leading	33.68	0.969	Leading	37.99
136	FLT173-3PH	0.976	Leading	33.30	0.976	Leading	33.54	0.967	Leading	39.56	0.976	Leading	33.69	0.969	Leading	38.01
137	FLT174-3PH	0.976	Leading	33.29	0.976	Leading	33.54	0.967	Leading	39.58	0.976	Leading	33.76	0.969	Leading	38.04
138	FLT175-3PH	0.976	Leading	33.27	0.976	Leading	33.47	0.967	Leading	39.56	0.976	Leading	33.63	0.969	Leading	38.00
139	FLT176-3PH	0.976	Leading	33.50	0.976	Leading	33.62	0.967	Leading	39.60	0.976	Leading	33.65	0.969	Leading	38.06
140	FLT177-3PH	0.976	Leading	33.23	0.976	Leading	33.50	0.967	Leading	39.52	0.976	Leading	33.67	0.969	Leading	37.95
141	FLT178-3PH	0.976	Leading	33.30	0.976	Leading	33.52	0.967	Leading	39.53	0.976	Leading	33.66	0.969	Leading	37.98
142	FLT179-3PH	0.976	Leading	33.23	0.976	Leading	33.50	0.967	Leading	39.47	0.976	Leading	33.67	0.970	Leading	37.90

Table 5-6 (Continued)
Power Factor Analysis: GEN-2015-014

Ref No.	Case	2015 Summer Peak			2015 Winter Peak			2020 Summer Peak			2020 Winter Peak			2025 Summer Peak		
		Power Factor		Q (MVAR)	Power Factor		Q (MVAR)	Power Factor		Q (MVAR)	Power Factor		Q (MVAR)	Power Factor		Q (MVAR)
143	FLT180-3PH	0.976	Leading	33.27	0.976	Leading	33.49	0.967	Leading	39.54	0.976	Leading	33.65	0.969	Leading	38.00
144	FLT181-3PH	0.976	Leading	33.30	0.976	Leading	33.54	0.967	Leading	39.56	0.976	Leading	33.69	0.969	Leading	38.01
145	FLT182-3PH	0.976	Leading	33.25	0.976	Leading	33.50	0.967	Leading	39.48	0.976	Leading	33.63	0.969	Leading	37.95
146	FLT183-3PH	0.976	Leading	33.20	0.976	Leading	33.40	0.967	Leading	39.48	0.976	Leading	33.59	0.969	Leading	37.94
147	FLT184-3PH	0.976	Leading	33.34	0.976	Leading	33.60	0.967	Leading	39.54	0.976	Leading	33.65	0.969	Leading	37.97
148	FLT185-3PH	0.976	Leading	33.30	0.976	Leading	33.54	0.967	Leading	39.57	0.976	Leading	33.70	0.969	Leading	38.00
149	FLT186-3PH	0.976	Leading	33.22	0.976	Leading	33.46	0.967	Leading	39.51	0.976	Leading	33.66	0.969	Leading	37.94
150	FLT187-3PH	0.976	Leading	33.21	0.976	Leading	33.39	0.967	Leading	39.54	0.976	Leading	33.63	0.969	Leading	37.96
151	FLT188-3PH	0.976	Leading	33.30	0.976	Leading	33.54	0.967	Leading	39.56	0.976	Leading	33.69	0.969	Leading	38.01
152	FLT189-3PH	0.976	Leading	33.30	0.976	Leading	33.53	0.967	Leading	39.56	0.976	Leading	33.68	0.969	Leading	38.00
153	FLT190-3PH	0.976	Leading	33.32	0.976	Leading	33.54	0.967	Leading	39.57	0.976	Leading	33.69	0.969	Leading	38.02
154	FLT191-3PH	0.976	Leading	33.41	0.976	Leading	33.55	0.967	Leading	39.67	0.976	Leading	33.75	0.969	Leading	38.13
155	FLT192-3PH	0.976	Leading	33.36	0.976	Leading	33.41	0.967	Leading	39.61	0.976	Leading	33.58	0.969	Leading	38.08
156	FLT193-3PH	0.976	Leading	33.30	0.976	Leading	33.54	0.967	Leading	39.56	0.976	Leading	33.69	0.969	Leading	38.01
157	FLT194-3PH	0.976	Leading	33.33	0.976	Leading	33.51	0.967	Leading	39.56	0.976	Leading	33.68	0.969	Leading	38.01
158	FLT195-3PH	0.976	Leading	33.50	0.976	Leading	33.58	0.967	Leading	39.47	0.976	Leading	33.63	0.969	Leading	38.03
159	FLT196-3PH	0.977	Leading	32.69	0.977	Leading	33.07	0.967	Leading	39.40	0.976	Leading	33.32	0.970	Leading	37.83
160	FLT197-3PH	0.976	Leading	33.35	0.976	Leading	33.24	0.966	Leading	39.94	0.976	Leading	33.60	0.968	Leading	38.65
161	FLT198-3PH	0.976	Leading	33.15	0.979	Leading	30.90	0.965	Leading	40.84	0.982	Leading	28.90	0.964	Leading	41.15
162	FLT199-3PH	0.995	Leading	14.53	0.997	Leading	12.49	0.997	Leading	10.03	0.995	Leading	15.02	0.998	Leading	10.19
163	FLT200-3PH	0.978	Leading	32.21	0.980	Leading	30.50	0.966	Leading	39.88	0.982	Leading	28.46	0.966	Leading	39.98
164	FLT201-3PH	0.998	Leading	8.42	0.987	Leading	24.82	0.997	Leading	12.13	0.990	Leading	21.68	0.999	Leading	6.52
165	FLT202-3PH	0.977	Leading	32.69	0.978	Leading	31.81	0.966	Leading	40.25	0.981	Leading	29.75	0.966	Leading	40.22
166	FLT203-3PH	0.968	Leading	38.91	0.972	Leading	36.32	0.955	Leading	46.84	0.971	Leading	36.74	0.954	Leading	47.14
167	FLT204-3PH	0.993	Leading	18.41	0.998	Leading	9.24	0.962	Leading	42.33	0.986	Leading	25.11	0.969	Leading	38.53
168	FLT205-3PH	0.978	Leading	32.12	0.976	Leading	33.14	0.969	Leading	38.20	0.976	Leading	33.24	0.972	Leading	36.41
169	FLT206-3PH	0.966	Leading	40.15	0.972	Leading	36.49	0.952	Leading	48.21	0.969	Leading	38.16	0.949	Leading	50.05
170	FLT207-3PH	0.955	Leading	46.52	0.964	Leading	41.47	0.949	Leading	49.96	0.968	Leading	39.12	0.952	Leading	48.20
171	FLT208-3PH	0.999	Leading	5.92	0.994	Leading	16.70	0.991	Leading	20.52	0.986	Leading	25.54	0.998	Leading	9.81
172	FLT209-3PH	0.987	Leading	24.73	0.987	Leading	23.96	0.976	Leading	33.49	0.984	Leading	26.86	0.980	Leading	30.60
173	FLT210-3PH	0.982	Leading	28.50	0.976	Leading	33.82	0.963	Leading	41.94	0.973	Leading	35.57	0.967	Leading	39.44
174	FLT211-3PH	0.979	Leading	31.45	0.977	Leading	32.79	0.968	Leading	38.62	0.976	Leading	33.37	0.971	Leading	37.20
175	FLT212-3PH	0.968	Leading	39.17	0.970	Leading	37.35	0.960	Leading	43.76	0.972	Leading	36.13	0.960	Leading	43.77
176	FLT213-3PH	0.975	Leading	33.88	0.977	Leading	33.03	0.966	Leading	39.88	0.976	Leading	33.34	0.968	Leading	38.80
177	FLT214-3PH	0.974	Leading	35.03	0.974	Leading	34.77	0.967	Leading	39.41	0.974	Leading	34.57	0.967	Leading	39.33
178	FLT215-3PH	0.974	Leading	34.89	0.974	Leading	34.74	0.965	Leading	40.51	0.974	Leading	34.76	0.967	Leading	39.40
179	FLT216-3PH	0.973	Leading	35.33	0.974	Leading	34.76	0.967	Leading	39.82	0.974	Leading	34.75	0.968	Leading	39.04
180	FLT217-3PH	0.976	Leading	33.31	0.976	Leading	33.54	0.967	Leading	39.63	0.976	Leading	33.69	0.969	Leading	38.11
181	FLT218-3PH	0.976	Leading	33.59	0.976	Leading	33.79	0.967	Leading	39.75	0.975	Leading	34.11	0.969	Leading	38.22
182	FLT219-3PH	0.976	Leading	33.33	0.976	Leading	33.56	0.967	Leading	39.57	0.976	Leading	33.70	0.969	Leading	38.04
183	FLT220-3PH	0.977	Leading	32.89	0.976	Leading	33.11	0.967	Leading	39.43	0.976	Leading	33.64	0.969	Leading	38.00
184	FLT221-3PH	N/A	N/A	N/A	0.975	Leading	34.41	N/A	N/A	N/A	0.975	Leading	34.04	0.968	Leading	39.04
186	FLT223-3PH	0.976	Leading	33.77	0.975	Leading	33.96	N/A	N/A	N/A	0.975	Leading	34.18	N/A	N/A	N/A
187	FLT224-3PH	0.976	Leading	33.49	0.976	Leading	33.63	N/A	N/A	N/A	0.976	Leading	33.63	N/A	N/A	N/A
188	FLT225-3PH	0.976	Leading	33.49	0.976	Leading	33.59	N/A	N/A	N/A	0.976	Leading	33.80	N/A	N/A	N/A

Study Generator GEN-2015-014

The Power Factor Analysis shows that GEN-2015-014 has a power factor range of 0.955 to 0.999 leading (absorbing) for the 2015 Summer Peak conditions, a power factor range of 0.964 to 0.998 leading (absorbing) for the 2015 Winter Peak conditions, a power factor range of 0.949 to 0.997 leading (absorbing) for the 2020 Summer Peak conditions, a power factor range of 0.968 to 0.995 leading (absorbing) for the 2020 Winter Peak conditions, and a power factor range of 0.949 to 0.999 leading (absorbing) for the 2025 Summer Peak conditions.

Table 5-7
Power Factor Analysis: GEN-2015-018

Ref No.	Case	2015 Summer Peak			2015 Winter Peak			2020 Summer Peak			2020 Winter Peak			2025 Summer Peak		
		Power Factor		Q (MVAR)	Power Factor		Q (MVAR)	Power Factor		Q (MVAR)	Power Factor		Q (MVAR)	Power Factor		Q (MVAR)
0	Base	0.991	Leading	10.71	0.982	Leading	15.59	0.993	Leading	9.57	0.983	Leading	14.82	0.994	Leading	8.45
1	FLT01-3PH	0.992	Leading	10.31	0.982	Leading	15.29	0.993	Leading	9.34	0.984	Leading	14.60	0.995	Leading	8.22
2	FLT02-3PH	0.992	Leading	10.17	0.982	Leading	15.19	0.993	Leading	9.22	0.984	Leading	14.63	0.995	Leading	8.18
3	FLT03-3PH	0.991	Leading	11.01	0.980	Leading	16.06	0.992	Leading	10.00	0.983	Leading	14.98	0.994	Leading	8.80
4	FLT04-3PH	0.991	Leading	10.61	0.982	Leading	15.58	0.993	Leading	9.43	0.984	Leading	14.65	0.995	Leading	8.23
5	FLT05-3PH	1.000	Leading	0.57	0.999	Leading	3.94	1.000	Leading	1.24	1.000	Leading	1.17	0.997	Lagging	-6.14
6	FLT06-3PH	0.997	Leading	6.53	0.994	Leading	8.61	1.000	Lagging	-1.70	0.994	Leading	8.49	0.997	Leading	6.00
7	FLT07-3PH	0.991	Leading	10.63	0.982	Leading	15.58	0.993	Leading	9.46	0.984	Leading	14.67	0.995	Leading	8.26
8	FLT08-3PH	0.991	Leading	10.67	0.980	Leading	16.05	0.993	Leading	9.61	0.984	Leading	14.31	0.996	Leading	7.05
9	FLT09-3PH	0.990	Leading	11.27	0.981	Leading	15.77	0.993	Leading	9.70	0.983	Leading	14.82	0.995	Leading	8.40
10	FLT10-3PH	0.992	Leading	10.39	0.982	Leading	15.25	0.993	Leading	9.34	0.983	Leading	14.74	0.995	Leading	8.35
11	FLT11-3PH	0.991	Leading	10.65	0.982	Leading	15.46	0.993	Leading	9.44	0.983	Leading	14.83	0.995	Leading	8.23
12	FLT12-3PH	0.991	Leading	10.56	0.982	Leading	15.45	0.993	Leading	9.56	0.983	Leading	14.81	0.995	Leading	8.42
13	FLT13-3PH	0.991	Leading	10.60	0.982	Leading	15.59	0.993	Leading	9.51	0.983	Leading	14.82	0.994	Leading	8.47
14	FLT14-3PH	0.992	Leading	10.24	0.982	Leading	15.29	0.993	Leading	9.73	0.983	Leading	14.84	0.995	Leading	8.31
15	FLT15-3PH	0.990	Leading	11.33	0.981	Leading	15.89	0.993	Leading	9.57	0.983	Leading	14.81	0.995	Leading	8.40
16	FLT16-3PH	0.991	Leading	10.69	0.982	Leading	15.58	0.993	Leading	9.56	0.983	Leading	14.82	0.994	Leading	8.45
17	FLT22-3PH	0.991	Leading	10.72	0.982	Leading	15.60	0.993	Leading	9.55	0.983	Leading	14.81	0.994	Leading	8.44
18	FLT23-3PH	0.991	Leading	10.71	0.982	Leading	15.59	0.993	Leading	9.54	0.983	Leading	14.80	0.994	Leading	8.43
19	FLT24-3PH	0.991	Leading	10.61	0.982	Leading	15.54	0.993	Leading	9.55	0.983	Leading	14.84	0.994	Leading	8.48
20	FLT25-3PH	0.991	Leading	10.70	0.982	Leading	15.58	0.993	Leading	9.56	0.983	Leading	14.82	0.994	Leading	8.45
21	FLT28-3PH	0.991	Leading	10.77	0.982	Leading	15.59	0.993	Leading	9.54	0.983	Leading	14.81	0.994	Leading	8.44
22	FLT29-3PH	N/A	N/A	N/A	0.981	Leading	15.63	N/A	N/A	N/A	N/A	N/A	N/A	0.994	Leading	8.44
23	FLT30-3PH	N/A	N/A	N/A	0.981	Leading	15.74	N/A	N/A	N/A	N/A	N/A	N/A	0.994	Leading	8.45
24	FLT31-3PH	N/A	N/A	N/A	0.982	Leading	15.52	N/A	N/A	N/A	N/A	N/A	N/A	0.994	Leading	8.44
25	FLT33-3PH	0.991	Leading	10.88	0.981	Leading	15.72	0.993	Leading	9.57	0.983	Leading	14.82	0.994	Leading	8.45
26	FLT34-3PH	0.991	Leading	10.72	0.982	Leading	15.60	0.993	Leading	9.57	0.983	Leading	14.82	0.994	Leading	8.44
27	FLT35-3PH	0.991	Leading	10.70	0.982	Leading	15.59	0.993	Leading	9.56	0.983	Leading	14.82	0.994	Leading	8.45
28	FLT38-3PH	0.991	Leading	10.72	0.982	Leading	15.60	0.993	Leading	9.57	0.983	Leading	14.82	0.994	Leading	8.45
29	FLT42-3PH	0.991	Leading	10.72	0.982	Leading	15.59	0.993	Leading	9.56	0.983	Leading	14.82	0.994	Leading	8.43
30	FLT45-3PH	0.991	Leading	10.77	0.981	Leading	15.61	0.993	Leading	9.58	0.983	Leading	14.81	0.994	Leading	8.43
31	FLT46-3PH	0.991	Leading	10.60	0.982	Leading	15.47	0.993	Leading	9.51	0.983	Leading	14.80	0.994	Leading	8.43
32	FLT47-3PH	0.991	Leading	10.69	0.982	Leading	15.57	0.993	Leading	9.56	0.983	Leading	14.82	0.994	Leading	8.44
33	FLT48-3PH	0.991	Leading	10.65	0.981	Leading	16.02	0.993	Leading	9.60	0.984	Leading	14.29	0.996	Leading	7.03
34	FLT49-3PH	0.999	Leading	2.96	0.994	Leading	8.91	0.995	Leading	7.85	0.984	Leading	14.39	0.994	Leading	8.65
35	FLT50-3PH	0.992	Leading	10.14	0.983	Leading	14.73	0.995	Leading	8.29	0.985	Leading	13.89	0.997	Leading	6.42
36	FLT51-3PH	0.992	Leading	10.34	0.982	Leading	15.46	0.993	Leading	9.64	0.983	Leading	14.79	0.994	Leading	8.49
38	FLT53-3PH	0.991	Leading	10.67	0.982	Leading	15.58	0.993	Leading	9.38	0.984	Leading	14.39	0.995	Leading	7.82
40	FLT55-3PH	0.993	Leading	9.32	0.983	Leading	14.84	0.993	Leading	9.21	0.983	Leading	14.81	0.995	Leading	8.31
41	FLT56-3PH	0.991	Leading	10.68	0.982	Leading	15.60	0.993	Leading	9.55	0.983	Leading	14.81	0.994	Leading	8.44
42	FLT57-3PH	0.991	Leading	10.67	0.982	Leading	15.58	0.993	Leading	9.54	0.983	Leading	14.81	0.994	Leading	8.43
43	FLT58-3PH	0.993	Leading	9.75	0.984	Leading	14.31	0.993	Leading	9.46	0.983	Leading	14.78	0.995	Leading	8.39
44	FLT59-3PH	0.991	Leading	10.66	0.982	Leading	15.56	0.993	Leading	9.48	0.983	Leading	14.78	0.995	Leading	8.33
47	FLT62-3PH	0.991	Leading	10.71	0.982	Leading	15.59	0.993	Leading	9.57	0.983	Leading	14.82	0.994	Leading	8.45
49	FLT64-3PH	0.993	Leading	9.36	0.986	Leading	13.41	0.994	Leading	8.83	0.984	Leading	14.60	0.995	Leading	7.98
51	FLT67-3PH	0.993	Leading	9.31	0.986	Leading	13.56	0.999	Lagging	-3.49	0.991	Leading	10.85	0.996	Lagging	-6.86
55	FLT71-3PH	0.991	Leading	10.65	0.982	Leading	15.59	0.993	Leading	9.57	0.983	Leading	14.83	0.994	Leading	8.47
56	FLT72-3PH	0.991	Leading	10.62	0.982	Leading	15.56	0.993	Leading	9.57	0.983	Leading	14.83	0.994	Leading	8.48
57	FLT73-3PH	0.991	Leading	10.71	0.983	Leading	15.14	0.993	Leading	9.49	0.983	Leading	14.82	0.995	Leading	8.42
58	FLT74-3PH	0.991	Leading	10.69	0.981	Leading	15.61	0.993	Leading	9.54	0.983	Leading	14.82	0.994	Leading	8.44
59	FLT75-3PH	0.991	Leading	10.71	0.981	Leading	15.65	0.993	Leading	9.56	0.983	Leading	14.81	0.995	Leading	8.42
60	FLT76-3PH	0.991	Leading	10.68	0.981	Leading	15.68	0.993	Leading	9.57	0.983	Leading	14.82	0.994	Leading	8.45
61	FLT77-3PH	0.991	Leading	10.57	0.982	Leading	15.56	0.993	Leading	9.53	0.983	Leading	14.78	0.995	Leading	8.40
62	FLT78-3PH	0.991	Leading	10.72	0.981	Leading	15.70	0.993	Leading	9.61	0.983	Leading	14.82	0.994	Leading	8.52
63	FLT79-3PH	0.991	Leading	10.73	0.981	Leading	15.63	0.993	Leading	9.58	0.983	Leading	14.83	0.994	Leading	8.47
64	FLT80-3PH	0.991	Leading	10.63	0.982	Leading	15.41	0.993	Leading	9.57	0.983	Leading	14.85	0.995	Leading	8.42
65	FLT81-3PH	0.991	Leading	10.73	0.982	Leading	15.49	0.993	Leading	9.52	0.983	Leading	14.80	0.995	Leading	8.37
66	FLT82-3PH	0.991	Leading	10.64	0.982	Leading	15.32	0.993	Leading	9.48	0.983	Leading	14.81	0.995	Leading	8.40
67	FLT88-3PH	0.991	Leading	10.61	0.982	Leading	15.41	0.993	Leading	9.57	0.983	Leading	14.79	0.994	Leading	8.43
68	FLT90-3PH	0.994	Leading	8.89	0.986	Leading	13.56	0.994	Leading	8.88	0.985	Leading	14.24	0.995	Leading	7.65
69	FLT91-3PH	0.992	Leading	10.50	0.982	Leading	15.44	0.993	Leading	9.57	0.983	Leading	14.85	0.994	Leading	8.46
70	FLT93-3PH	0.991	Leading	10.70	0.982	Leading	15.54	0.993	Leading	9.57	0.983	Leading	14.82	0.994	Leading	8.44
71	FLT94-3PH	0.991	Leading	10.72	0.981	Leading	15.62	0.993	Leading	9.56	0.983	Leading	14.81	0.994	Leading	8.44
72	FLT95-3PH	0.991	Leading	10.62	0.982	Leading	15.42	0.993	Leading	9.52	0.983	Leading	14.82	0.995	Leading	8.40
73	FLT96-3PH	0.991	Leading	10.71	0.982	Leading	15.59	0.993	Leading	9.57	0.983	Leading	14.82	0.994	Leading	8.45
74	FLT97-3PH	0.991	Leading	10.55	0.982	Leading	15.27	0.993	Leading	9.39	0.983	Leading	14.72	0.995	Leading	8.29

Table 5-7 (Continued)
Power Factor Analysis: GEN-2015-018

Ref No.	Case	2015 Summer Peak			2015 Winter Peak			2020 Summer Peak			2020 Winter Peak			2025 Summer Peak		
		Power Factor		Q (MVAR)	Power Factor		Q (MVAR)	Power Factor		Q (MVAR)	Power Factor		Q (MVAR)	Power Factor		Q (MVAR)
76	FLT99-3PH	0.988	Leading	12.73	0.967	Leading	21.18	0.983	Leading	14.77	0.970	Leading	19.94	0.984	Leading	14.35
77	FLT100-3PH	0.991	Leading	10.75	0.980	Leading	16.10	0.993	Leading	9.62	0.983	Leading	15.04	0.995	Leading	7.83
78	FLT101-3PH	0.989	Leading	12.00	0.980	Leading	16.21	0.991	Leading	10.80	0.982	Leading	15.59	0.992	Leading	10.29
79	FLT102-3PH	0.991	Leading	10.75	0.980	Leading	16.10	0.993	Leading	9.62	0.983	Leading	15.04	0.995	Leading	7.83
80	FLT103-3PH	0.989	Leading	11.78	0.968	Leading	20.82	0.992	Leading	10.43	0.973	Leading	18.86	0.998	Leading	4.66
81	FLT104-3PH	0.991	Leading	10.71	0.982	Leading	15.59	0.993	Leading	9.57	0.983	Leading	14.82	0.994	Leading	8.45
82	FLT105-3PH	0.997	Leading	6.05	0.992	Leading	10.39	0.998	Leading	5.14	0.992	Leading	10.41	0.999	Leading	3.58
83	FLT106-3PH	0.992	Leading	10.48	0.994	Leading	8.63	0.995	Leading	7.63	0.993	Leading	9.64	0.996	Leading	7.55
84	FLT107-3PH	0.991	Leading	10.78	0.983	Leading	14.94	0.993	Leading	9.54	0.985	Leading	14.22	0.994	Leading	8.89
85	FLT108-3PH	0.993	Leading	9.38	0.987	Leading	13.23	0.996	Leading	6.82	0.986	Leading	13.54	0.996	Leading	7.18
87	FLT116-3PH	0.992	Leading	10.47	0.983	Leading	14.96	0.993	Leading	9.47	0.983	Leading	14.76	0.994	Leading	8.45
88	FLT117-3PH	N/A	N/A	N/A	N/A	N/A	N/A	0.993	Leading	9.21	0.983	Leading	14.82	0.994	Leading	8.45
89	FLT122-3PH	0.990	Leading	11.59	0.977	Leading	17.32	0.992	Leading	9.92	0.980	Leading	16.08	0.995	Leading	8.06
90	FLT123-3PH	0.999	Leading	4.17	0.994	Leading	8.61	0.997	Leading	5.79	0.987	Leading	13.05	0.997	Leading	6.21
91	FLT125-3PH	0.992	Leading	10.14	0.984	Leading	14.58	0.994	Leading	9.03	0.984	Leading	14.61	0.995	Leading	8.20
92	FLT126-3PH	0.991	Leading	10.56	0.981	Leading	15.64	0.993	Leading	9.49	0.983	Leading	14.94	0.995	Leading	8.33
93	FLT129-3PH	N/A	N/A	N/A	N/A	N/A	N/A	0.995	Leading	8.11	0.983	Leading	14.81	0.995	Leading	8.16
94	FLT130-3PH	0.991	Leading	10.65	0.982	Leading	15.56	N/A	N/A	N/A	N/A	N/A	N/A	N/A	N/A	N/A
95	FLT132-3PH	0.992	Leading	10.49	0.982	Leading	15.53	0.993	Leading	9.58	0.983	Leading	14.81	0.994	Leading	8.49
96	FLT133-3PH	0.992	Leading	10.40	0.982	Leading	15.49	0.993	Leading	9.61	0.983	Leading	14.84	0.994	Leading	8.55
97	FLT134-3PH	0.991	Leading	10.52	0.982	Leading	15.55	0.993	Leading	9.56	0.983	Leading	14.80	0.994	Leading	8.45
98	FLT135-3PH	0.991	Leading	10.69	0.982	Leading	15.58	0.993	Leading	9.55	0.983	Leading	14.82	0.994	Leading	8.44
99	FLT136-3PH	0.991	Leading	10.71	0.982	Leading	15.59	0.993	Leading	9.52	0.983	Leading	14.81	0.995	Leading	8.39
100	FLT137-3PH	0.991	Leading	10.71	0.982	Leading	15.58	0.993	Leading	9.57	0.983	Leading	14.83	0.994	Leading	8.46
101	FLT138-3PH	0.991	Leading	10.67	0.982	Leading	15.54	0.993	Leading	9.55	0.983	Leading	14.82	0.994	Leading	8.45
102	FLT139-3PH	0.991	Leading	10.70	0.981	Leading	15.65	0.993	Leading	9.56	0.983	Leading	14.82	0.994	Leading	8.45
103	FLT140-3PH	0.992	Leading	10.42	0.982	Leading	15.43	0.993	Leading	9.48	0.983	Leading	14.79	0.995	Leading	8.33
104	FLT141-3PH	0.991	Leading	10.70	0.982	Leading	15.56	0.993	Leading	9.49	0.983	Leading	14.79	0.995	Leading	8.31
105	FLT142-3PH	0.992	Leading	10.30	0.983	Leading	15.09	0.993	Leading	9.47	0.983	Leading	14.79	0.995	Leading	8.34
106	FLT143-3PH	0.992	Leading	10.13	0.982	Leading	15.25	0.993	Leading	9.43	0.983	Leading	14.79	0.995	Leading	8.36
107	FLT144-3PH	0.991	Leading	10.73	0.981	Leading	15.67	0.993	Leading	9.74	0.983	Leading	14.90	0.994	Leading	8.77
108	FLT145-3PH	0.991	Leading	10.64	0.982	Leading	15.59	0.993	Leading	9.55	0.983	Leading	14.84	0.994	Leading	8.44
109	FLT146-3PH	0.991	Leading	10.50	0.982	Leading	15.57	0.993	Leading	9.46	0.983	Leading	14.82	0.995	Leading	8.40
110	FLT147-3PH	0.991	Leading	10.67	0.982	Leading	15.60	0.993	Leading	9.60	0.983	Leading	14.83	0.994	Leading	8.50
111	FLT148-3PH	0.991	Leading	10.71	0.982	Leading	15.59	0.993	Leading	9.55	0.983	Leading	14.82	0.994	Leading	8.43
112	FLT148-3PH	0.996	Leading	7.16	0.988	Leading	12.48	0.997	Leading	6.00	0.990	Leading	11.59	0.997	Leading	6.20
113	FLT150-3PH	0.997	Leading	6.29	0.991	Leading	10.85	0.999	Leading	3.70	0.992	Leading	10.34	0.999	Leading	3.85
114	FLT151-3PH	0.994	Leading	8.54	0.989	Leading	12.16	0.996	Leading	7.01	0.988	Leading	12.63	0.997	Leading	5.77
115	FLT152-3PH	0.995	Leading	8.15	0.980	Leading	16.10	0.996	Leading	6.84	0.983	Leading	14.90	0.994	Leading	9.02
116	FLT153-3PH	0.992	Leading	10.13	0.982	Leading	15.18	0.994	Leading	9.07	0.984	Leading	14.45	0.995	Leading	7.86
117	FLT154-3PH	0.991	Leading	10.75	0.980	Leading	16.10	0.993	Leading	9.62	0.983	Leading	15.04	0.995	Leading	7.83
118	FLT155-3PH	0.997	Leading	6.11	0.993	Leading	9.69	0.997	Leading	5.88	0.992	Leading	10.22	0.997	Leading	6.68
119	FLT156-3PH	0.993	Leading	9.31	0.985	Leading	14.21	0.996	Leading	6.95	0.986	Leading	13.48	0.996	Leading	7.44
120	FLT157-3PH	0.988	Leading	12.47	0.975	Leading	18.38	0.990	Leading	11.55	0.977	Leading	17.61	0.993	Leading	9.82
121	FLT158-3PH	0.987	Leading	12.93	0.976	Leading	17.76	0.989	Leading	12.03	0.978	Leading	16.89	0.992	Leading	10.32
122	FLT159-3PH	0.997	Lagging	-6.06	0.999	Leading	4.21	0.996	Lagging	-7.55	0.999	Leading	3.34	0.995	Lagging	-8.03
123	FLT160-3PH	1.000	Lagging	-1.51	0.991	Leading	10.93	0.998	Lagging	-4.77	0.992	Leading	9.94	0.997	Lagging	-6.56
124	FLT161-3PH	0.992	Leading	10.12	0.983	Leading	15.13	0.993	Leading	9.36	0.984	Leading	14.61	0.995	Leading	8.16
125	FLT162-3PH	0.946	Leading	27.41	0.979	Leading	16.62	0.940	Leading	29.09	0.979	Leading	16.54	0.941	Leading	28.70
126	FLT163-3PH	0.991	Leading	10.71	0.996	Leading	7.08	0.999	Lagging	-3.79	0.996	Leading	7.30	0.995	Lagging	-7.69
127	FLT164-3PH	0.991	Leading	10.71	0.998	Leading	5.62	0.996	Lagging	-6.76	0.997	Leading	6.23	0.991	Lagging	-10.85
128	FLT165-3PH	0.996	Leading	6.92	0.983	Leading	15.00	0.989	Leading	11.69	0.989	Leading	11.87	0.997	Leading	5.78
129	FLT166-3PH	0.996	Leading	7.48	0.994	Leading	9.14	0.998	Leading	5.11	0.992	Leading	10.24	0.997	Leading	6.68
130	FLT167-3PH	0.991	Leading	10.71	0.982	Leading	15.59	0.993	Leading	9.57	0.983	Leading	14.82	0.994	Leading	8.45
131	FLT168-3PH	0.998	Lagging	-5.05	0.999	Leading	3.11	0.997	Lagging	-6.35	0.999	Leading	3.76	0.994	Lagging	-8.85
132	FLT169-3PH	0.991	Leading	10.71	0.982	Leading	15.59	0.993	Leading	9.57	0.983	Leading	14.82	0.994	Leading	8.45
133	FLT170-3PH	0.996	Leading	6.88	0.994	Leading	8.66	0.999	Leading	3.79	0.999	Leading	4.21	0.999	Leading	3.89
134	FLT171-3PH	0.991	Leading	10.71	0.982	Leading	15.59	0.993	Leading	9.57	0.983	Leading	14.82	0.994	Leading	8.45
135	FLT172-3PH	0.993	Leading	9.46	0.986	Leading	13.56	0.994	Leading	8.88	0.984	Leading	14.62	0.995	Leading	8.01
136	FLT173-3PH	0.991	Leading	10.71	0.982	Leading	15.59	0.993	Leading	9.57	0.983	Leading	14.82	0.994	Leading	8.45
137	FLT174-3PH	0.992	Leading	10.41	0.982	Leading	15.32	0.993	Leading	9.34	0.983	Leading	14.78	0.995	Leading	8.32
138	FLT175-3PH	0.991	Leading	10.69	0.982	Leading	15.55	0.993	Leading	9.50	0.983	Leading	14.80	0.995	Leading	8.38
139	FLT176-3PH	0.991	Leading	10.74	0.981	Leading	15.72	0.993	Leading	9.55	0.983	Leading	14.81	0.995	Leading	8.41
140	FLT177-3PH	0.991	Leading	10.71	0.982	Leading	15.54	0.993	Leading	9.57	0.983	Leading	14.81	0.994	Leading	8.45
141	FLT178-3PH	0.991	Leading	10.77	0.982	Leading	15.55	0.993	Leading	9.62	0.983	Leading	14.84	0.994	Leading	8.47
142	FLT179-3PH	0.991	Leading	10.75	0.982	Leading	15.59	0.993	Leading	9.57	0.983	Leading	14.81	0.994	Leading	8.49

Table 5-7 (Continued)
Power Factor Analysis: GEN-2015-018

Ref No.	Case	2015 Summer Peak			2015 Winter Peak			2020 Summer Peak			2020 Winter Peak			2025 Summer Peak		
		Power Factor		Q (MVAR)	Power Factor		Q (MVAR)	Power Factor		Q (MVAR)	Power Factor		Q (MVAR)	Power Factor		Q (MVAR)
143	FLT180-3PH	0.991	Leading	10.59	0.982	Leading	15.36	0.993	Leading	9.46	0.984	Leading	14.67	0.995	Leading	8.41
144	FLT181-3PH	0.991	Leading	10.71	0.982	Leading	15.59	0.993	Leading	9.57	0.983	Leading	14.82	0.994	Leading	8.45
145	FLT182-3PH	0.991	Leading	10.75	0.981	Leading	15.62	0.993	Leading	9.59	0.983	Leading	14.83	0.994	Leading	8.47
146	FLT183-3PH	0.992	Leading	10.41	0.983	Leading	15.08	0.993	Leading	9.25	0.984	Leading	14.49	0.995	Leading	8.01
147	FLT184-3PH	0.991	Leading	10.75	0.981	Leading	15.74	0.993	Leading	9.59	0.983	Leading	14.82	0.994	Leading	8.45
148	FLT185-3PH	0.991	Leading	10.70	0.981	Leading	15.62	0.993	Leading	9.55	0.983	Leading	14.85	0.995	Leading	8.35
149	FLT186-3PH	0.991	Leading	10.80	0.982	Leading	15.44	0.993	Leading	9.60	0.983	Leading	14.82	0.994	Leading	8.45
150	FLT187-3PH	0.991	Leading	10.83	0.982	Leading	15.41	0.993	Leading	9.60	0.983	Leading	14.83	0.994	Leading	8.45
151	FLT188-3PH	0.991	Leading	10.71	0.982	Leading	15.59	0.993	Leading	9.57	0.983	Leading	14.82	0.994	Leading	8.45
152	FLT189-3PH	0.991	Leading	10.71	0.982	Leading	15.58	0.993	Leading	9.57	0.983	Leading	14.82	0.994	Leading	8.45
153	FLT190-3PH	0.991	Leading	10.71	0.982	Leading	15.57	0.993	Leading	9.57	0.983	Leading	14.83	0.994	Leading	8.45
154	FLT191-3PH	0.991	Leading	10.64	0.982	Leading	15.37	0.993	Leading	9.51	0.983	Leading	14.81	0.995	Leading	8.42
155	FLT192-3PH	0.992	Leading	10.28	0.981	Leading	15.64	0.994	Leading	8.97	0.983	Leading	14.80	0.995	Leading	7.86
156	FLT193-3PH	0.991	Leading	10.71	0.982	Leading	15.59	0.993	Leading	9.57	0.983	Leading	14.82	0.994	Leading	8.45
157	FLT194-3PH	0.991	Leading	10.57	0.982	Leading	15.42	0.993	Leading	9.42	0.983	Leading	14.81	0.995	Leading	8.33
158	FLT195-3PH	0.991	Leading	10.55	0.982	Leading	15.27	0.993	Leading	9.39	0.983	Leading	14.72	0.995	Leading	8.29
159	FLT196-3PH	0.991	Leading	10.69	0.981	Leading	15.71	0.993	Leading	9.50	0.983	Leading	14.78	0.995	Leading	8.35
160	FLT197-3PH	0.991	Leading	10.64	0.981	Leading	15.93	0.993	Leading	9.30	0.983	Leading	14.83	0.995	Leading	8.37
161	FLT198-3PH	0.991	Leading	10.76	0.982	Leading	15.53	0.993	Leading	9.65	0.983	Leading	14.73	0.994	Leading	8.56
162	FLT199-3PH	0.992	Leading	10.37	0.982	Leading	15.44	0.993	Leading	9.35	0.984	Leading	14.71	0.995	Leading	8.25
163	FLT200-3PH	0.991	Leading	10.74	0.982	Leading	15.52	0.993	Leading	9.62	0.983	Leading	14.73	0.994	Leading	8.53
164	FLT201-3PH	0.991	Leading	10.57	0.982	Leading	15.45	0.994	Leading	9.16	0.983	Leading	14.87	0.995	Leading	7.76
165	FLT202-3PH	0.991	Leading	10.73	0.982	Leading	15.55	0.993	Leading	9.62	0.983	Leading	14.75	0.994	Leading	8.53
166	FLT203-3PH	0.991	Leading	10.50	0.982	Leading	15.44	0.993	Leading	9.60	0.983	Leading	14.85	0.994	Leading	8.59
167	FLT204-3PH	0.991	Leading	10.50	0.981	Leading	15.61	0.993	Leading	9.38	0.983	Leading	14.81	0.995	Leading	8.34
168	FLT205-3PH	0.991	Leading	10.71	0.982	Leading	15.59	0.993	Leading	9.54	0.983	Leading	14.81	0.995	Leading	8.42
169	FLT206-3PH	0.992	Leading	10.44	0.982	Leading	15.19	0.994	Leading	8.44	0.985	Leading	14.14	0.998	Leading	5.25
170	FLT207-3PH	0.991	Leading	10.80	0.981	Leading	15.91	0.992	Leading	10.26	0.982	Leading	15.26	0.994	Leading	9.01
171	FLT208-3PH	0.991	Leading	10.67	0.983	Leading	15.16	0.995	Leading	8.35	0.984	Leading	14.65	0.997	Leading	6.56
172	FLT209-3PH	0.991	Leading	10.80	0.980	Leading	16.17	0.994	Leading	9.07	0.985	Leading	14.14	0.996	Leading	7.46
173	FLT210-3PH	0.992	Leading	10.05	0.981	Leading	15.68	0.993	Leading	9.70	0.983	Leading	15.01	0.994	Leading	8.53
174	FLT211-3PH	0.991	Leading	10.60	0.982	Leading	15.53	0.993	Leading	9.47	0.983	Leading	14.79	0.995	Leading	8.37
175	FLT212-3PH	0.991	Leading	10.73	0.981	Leading	15.66	0.993	Leading	9.63	0.983	Leading	14.85	0.994	Leading	8.52
176	FLT213-3PH	0.991	Leading	10.71	0.982	Leading	15.58	0.993	Leading	9.56	0.983	Leading	14.81	0.994	Leading	8.43
177	FLT214-3PH	0.993	Leading	9.75	0.986	Leading	13.77	0.993	Leading	9.54	0.984	Leading	14.48	0.995	Leading	7.81
178	FLT215-3PH	0.992	Leading	10.10	0.984	Leading	14.49	0.995	Leading	8.11	0.984	Leading	14.61	0.995	Leading	8.15
179	FLT216-3PH	0.994	Leading	9.13	0.985	Leading	13.84	0.996	Leading	7.17	0.984	Leading	14.51	0.997	Leading	6.70
180	FLT217-3PH	0.991	Leading	10.71	0.982	Leading	15.59	0.993	Leading	9.53	0.983	Leading	14.82	0.994	Leading	8.44
181	FLT218-3PH	0.991	Leading	10.63	0.982	Leading	15.46	0.993	Leading	9.53	0.983	Leading	14.80	0.994	Leading	8.44
182	FLT219-3PH	0.991	Leading	10.70	0.982	Leading	15.58	0.993	Leading	9.56	0.983	Leading	14.82	0.994	Leading	8.45
183	FLT220-3PH	1.000	Leading	0.76	1.000	Leading	1.90	1.000	Lagging	-1.05	1.000	Leading	0.57	1.000	Leading	0.83
184	FLT221-3PH	N/A	N/A	N/A	0.984	Leading	14.43	N/A	N/A	N/A	0.984	Leading	14.61	0.995	Leading	8.07
186	FLT223-3PH	0.991	Leading	10.62	0.982	Leading	15.50	0.995	Leading	8.11	0.983	Leading	14.78	N/A	N/A	N/A
187	FLT224-3PH	0.991	Leading	10.63	0.982	Leading	15.32	0.995	Leading	8.11	0.983	Leading	14.77	N/A	N/A	N/A
188	FLT225-3PH	0.991	Leading	10.65	0.982	Leading	15.59	N/A	N/A	N/A	0.983	Leading	14.82	N/A	N/A	N/A

Study Generator GEN-2015-018

The Power Factor Analysis shows that GEN-2015-018 has a power factor range of 0.997 lagging (absorbing) to 0.946 leading (absorbing) for the 2015 Summer Peak conditions, a power factor range of 0.967 leading (absorbing) to 1.00 (unity) for the 2015 Winter Peak conditions, a power factor range of 0.996 lagging (absorbing) to 0.940 leading (absorbing) for the 2020 Summer Peak conditions, a power factor range of 0.970 leading (absorbing) to 1.00 (unity) for the 2020 Winter Peak conditions, and a power factor range of 0.991 lagging (absorbing) to 0.941 leading (absorbing) for the 2025 Summer Peak conditions.

Table 5-8
Power Factor Analysis: GEN-2015-020

Ref No.	Case	2015 Summer Peak			2015 Winter Peak			2020 Summer Peak			2020 Winter Peak			2025 Summer Peak		
		Power Factor		Q (MVAR)	Power Factor		Q (MVAR)	Power Factor		Q (MVAR)	Power Factor		Q (MVAR)	Power Factor		Q (MVAR)
0	Base	0.985	Leading	17.38	0.984	Leading	17.87	0.984	Leading	18.34	0.986	Leading	17.04	0.989	Leading	14.96
1	FLT01-3PH	0.987	Leading	16.37	0.986	Leading	17.13	0.985	Leading	17.79	0.987	Leading	16.47	0.990	Leading	14.43
2	FLT02-3PH	0.987	Leading	16.02	0.986	Leading	16.90	0.985	Leading	17.47	0.987	Leading	16.59	0.990	Leading	14.35
3	FLT03-3PH	0.984	Leading	18.26	0.982	Leading	19.20	0.981	Leading	19.65	0.985	Leading	17.47	0.987	Leading	16.04
4	FLT04-3PH	0.986	Leading	17.08	0.985	Leading	17.78	0.984	Leading	17.94	0.987	Leading	16.54	0.990	Leading	14.33
5	FLT05-3PH	0.998	Lagging	-6.83	0.996	Lagging	-9.11	1.000	Leading	1.76	0.992	Lagging	-12.93	0.989	Lagging	-14.82
6	FLT06-3PH	0.996	Leading	8.56	0.999	Leading	3.28	0.995	Lagging	-10.37	0.998	Leading	5.72	0.991	Leading	13.25
7	FLT07-3PH	0.986	Leading	17.13	0.985	Leading	17.81	0.984	Leading	18.01	0.986	Leading	16.61	0.990	Leading	14.42
8	FLT08-3PH	0.985	Leading	17.29	0.984	Leading	18.39	0.985	Leading	17.31	0.990	Leading	14.04	0.996	Leading	8.64
9	FLT09-3PH	0.984	Leading	18.12	0.984	Leading	18.05	0.984	Leading	18.20	0.986	Leading	17.15	0.990	Leading	14.46
10	FLT10-3PH	0.986	Leading	16.73	0.986	Leading	17.21	0.984	Leading	18.17	0.985	Leading	17.36	0.988	Leading	15.35
11	FLT11-3PH	0.986	Leading	17.20	0.985	Leading	17.51	0.984	Leading	17.99	0.986	Leading	17.05	0.990	Leading	14.37
12	FLT12-3PH	0.986	Leading	16.99	0.985	Leading	17.51	0.984	Leading	18.33	0.986	Leading	17.04	0.989	Leading	14.92
13	FLT13-3PH	0.986	Leading	17.16	0.984	Leading	17.86	0.983	Leading	18.41	0.985	Leading	17.22	0.989	Leading	15.30
14	FLT14-3PH	0.989	Leading	14.77	0.987	Leading	16.54	0.984	Leading	18.26	0.986	Leading	16.77	0.990	Leading	14.00
15	FLT15-3PH	0.984	Leading	18.26	0.984	Leading	18.20	0.984	Leading	18.31	0.986	Leading	16.69	0.989	Leading	14.71
16	FLT16-3PH	0.985	Leading	17.35	0.984	Leading	17.85	0.984	Leading	18.34	0.986	Leading	17.07	0.989	Leading	15.01
17	FLT22-3PH	0.985	Leading	17.39	0.984	Leading	17.87	0.984	Leading	18.30	0.986	Leading	17.01	0.989	Leading	14.94
18	FLT23-3PH	0.985	Leading	17.38	0.984	Leading	17.90	0.984	Leading	18.26	0.986	Leading	17.00	0.989	Leading	14.92
19	FLT24-3PH	0.985	Leading	17.27	0.985	Leading	17.79	0.983	Leading	18.41	0.986	Leading	17.19	0.989	Leading	15.23
20	FLT25-3PH	0.985	Leading	17.36	0.984	Leading	17.85	0.984	Leading	18.33	0.986	Leading	17.04	0.989	Leading	14.97
21	FLT28-3PH	0.985	Leading	17.48	0.984	Leading	17.85	0.984	Leading	18.31	0.986	Leading	17.03	0.989	Leading	14.97
22	FLT29-3PH	N/A	N/A	N/A	0.984	Leading	17.92	N/A	N/A	N/A	N/A	N/A	N/A	0.989	Leading	14.96
23	FLT30-3PH	N/A	N/A	N/A	0.984	Leading	18.06	N/A	N/A	N/A	N/A	N/A	N/A	0.989	Leading	14.99
24	FLT31-3PH	N/A	N/A	N/A	0.984	Leading	17.83	N/A	N/A	N/A	N/A	N/A	N/A	0.989	Leading	14.76
25	FLT33-3PH	0.985	Leading	17.62	0.984	Leading	18.00	0.984	Leading	18.34	0.986	Leading	17.04	0.989	Leading	14.96
26	FLT34-3PH	0.985	Leading	17.39	0.984	Leading	17.88	0.984	Leading	18.32	0.986	Leading	17.03	0.989	Leading	14.92
27	FLT35-3PH	0.985	Leading	17.37	0.984	Leading	17.86	0.984	Leading	18.33	0.986	Leading	17.04	0.989	Leading	14.97
28	FLT38-3PH	0.985	Leading	17.39	0.984	Leading	17.87	0.984	Leading	18.34	0.986	Leading	17.03	0.989	Leading	14.95
29	FLT42-3PH	0.985	Leading	17.39	0.984	Leading	17.87	0.984	Leading	18.32	0.986	Leading	17.02	0.989	Leading	14.90
30	FLT45-3PH	0.985	Leading	17.47	0.984	Leading	17.88	0.984	Leading	18.30	0.986	Leading	16.98	0.989	Leading	14.83
31	FLT46-3PH	0.986	Leading	17.20	0.985	Leading	17.75	0.984	Leading	18.33	0.986	Leading	17.08	0.989	Leading	15.06
32	FLT47-3PH	0.985	Leading	17.35	0.984	Leading	17.85	0.984	Leading	18.33	0.986	Leading	17.05	0.989	Leading	14.99
33	FLT48-3PH	0.985	Leading	17.28	0.984	Leading	18.38	0.985	Leading	17.29	0.990	Leading	14.02	0.996	Leading	8.61
34	FLT49-3PH	0.999	Lagging	-4.13	0.999	Leading	3.99	0.988	Leading	15.74	0.985	Leading	17.33	0.986	Leading	16.79
35	FLT50-3PH	0.986	Leading	17.08	0.984	Leading	17.93	0.988	Leading	15.45	0.990	Leading	14.30	0.996	Leading	9.51
36	FLT51-3PH	0.987	Leading	16.02	0.985	Leading	17.55	0.983	Leading	18.40	0.986	Leading	16.99	0.989	Leading	15.06
38	FLT53-3PH	0.985	Leading	17.27	0.984	Leading	18.24	0.984	Leading	18.15	0.987	Leading	16.29	0.991	Leading	13.68
40	FLT55-3PH	0.988	Leading	15.45	0.985	Leading	17.31	0.984	Leading	18.31	0.986	Leading	16.99	0.989	Leading	15.14
41	FLT56-3PH	0.985	Leading	17.32	0.984	Leading	17.88	0.984	Leading	18.33	0.986	Leading	17.04	0.989	Leading	14.98
42	FLT57-3PH	0.985	Leading	17.31	0.984	Leading	17.87	0.984	Leading	18.33	0.986	Leading	17.04	0.989	Leading	14.98
43	FLT58-3PH	0.988	Leading	15.72	0.987	Leading	16.04	0.984	Leading	18.34	0.986	Leading	17.13	0.989	Leading	14.94
44	FLT59-3PH	0.985	Leading	17.34	0.984	Leading	17.85	0.984	Leading	18.31	0.986	Leading	17.04	0.989	Leading	14.95
47	FLT62-3PH	0.985	Leading	17.38	0.984	Leading	17.87	0.984	Leading	18.34	0.986	Leading	17.04	0.989	Leading	14.96
49	FLT64-3PH	0.986	Leading	17.04	0.985	Leading	17.61	0.984	Leading	18.16	0.985	Leading	17.36	0.989	Leading	14.78
51	FLT67-3PH	0.985	Leading	17.26	0.985	Leading	17.55	0.990	Leading	14.15	0.987	Leading	16.32	0.995	Leading	9.75
55	FLT71-3PH	0.985	Leading	17.33	0.984	Leading	17.87	0.984	Leading	18.34	0.986	Leading	17.05	0.989	Leading	14.97
56	FLT72-3PH	0.985	Leading	17.31	0.984	Leading	17.85	0.984	Leading	18.34	0.986	Leading	17.06	0.989	Leading	14.98
57	FLT73-3PH	0.985	Leading	17.33	0.985	Leading	17.56	0.984	Leading	18.33	0.986	Leading	16.97	0.989	Leading	14.97
58	FLT74-3PH	0.985	Leading	17.37	0.984	Leading	17.85	0.984	Leading	18.34	0.986	Leading	17.02	0.989	Leading	14.98
59	FLT75-3PH	0.985	Leading	17.38	0.984	Leading	17.89	0.984	Leading	18.33	0.986	Leading	17.02	0.989	Leading	14.93
60	FLT76-3PH	0.985	Leading	17.36	0.984	Leading	17.91	0.984	Leading	18.34	0.986	Leading	17.04	0.989	Leading	14.96
61	FLT77-3PH	0.986	Leading	17.21	0.984	Leading	17.84	0.984	Leading	18.32	0.986	Leading	17.02	0.989	Leading	14.93
62	FLT78-3PH	0.985	Leading	17.38	0.984	Leading	17.91	0.984	Leading	18.36	0.986	Leading	17.04	0.989	Leading	15.00
63	FLT79-3PH	0.985	Leading	17.41	0.984	Leading	17.89	0.984	Leading	18.35	0.986	Leading	17.04	0.989	Leading	14.97
64	FLT80-3PH	0.985	Leading	17.24	0.985	Leading	17.73	0.984	Leading	18.33	0.986	Leading	17.05	0.989	Leading	14.95
65	FLT81-3PH	0.985	Leading	17.43	0.984	Leading	17.85	0.984	Leading	18.32	0.986	Leading	17.03	0.989	Leading	14.91
66	FLT82-3PH	0.985	Leading	17.37	0.985	Leading	17.75	0.984	Leading	18.33	0.986	Leading	17.05	0.989	Leading	14.98
67	FLT88-3PH	0.985	Leading	17.23	0.985	Leading	17.75	0.984	Leading	18.30	0.986	Leading	16.89	0.989	Leading	14.85
68	FLT90-3PH	0.986	Leading	16.69	0.985	Leading	17.68	0.984	Leading	17.89	0.986	Leading	16.62	0.991	Leading	13.82
69	FLT91-3PH	0.986	Leading	17.04	0.985	Leading	17.77	0.984	Leading	18.33	0.986	Leading	17.04	0.989	Leading	14.97
70	FLT93-3PH	0.985	Leading	17.37	0.984	Leading	17.84	0.984	Leading	18.34	0.986	Leading	17.04	0.989	Leading	14.96
71	FLT94-3PH	0.985	Leading	17.39	0.984	Leading	17.88	0.984	Leading	18.34	0.986	Leading	17.03	0.989	Leading	14.96
72	FLT95-3PH	0.985	Leading	17.31	0.985	Leading	17.79	0.984	Leading	18.31	0.986	Leading	17.05	0.989	Leading	14.93
73	FLT96-3PH	0.985	Leading	17.38	0.984	Leading	17.87	0.984	Leading	18.34	0.986	Leading	17.04	0.989	Leading	14.96
74	FLT97-3PH	0.986	Leading	16.93	0.985	Leading	17.56	0.984	Leading	17.87	0.986	Leading	16.80	0.989	Leading	14.61

Table 5-8 (Continued)
Power Factor Analysis: GEN-2015-020

Ref No.	Case	2015 Summer Peak			2015 Winter Peak			2020 Summer Peak			2020 Winter Peak			2025 Summer Peak		
		Power Factor		Q (MVAR)	Power Factor		Q (MVAR)	Power Factor		Q (MVAR)	Power Factor		Q (MVAR)	Power Factor		Q (MVAR)
76	FLT99-3PH	0.945	Leading	34.51	0.932	Leading	38.98	0.939	Leading	36.63	0.921	Leading	42.32	0.942	Leading	35.56
77	FLT100-3PH	0.987	Leading	16.09	0.986	Leading	16.75	0.986	Leading	17.09	0.988	Leading	15.92	0.991	Leading	13.71
78	FLT101-3PH	0.997	Leading	7.67	0.989	Leading	14.68	0.992	Leading	12.67	0.992	Leading	13.08	0.997	Leading	7.31
79	FLT102-3PH	0.987	Leading	16.09	0.986	Leading	16.75	0.986	Leading	17.09	0.988	Leading	15.92	0.991	Leading	13.71
80	FLT103-3PH	0.986	Leading	16.65	0.976	Leading	22.11	0.985	Leading	17.37	0.980	Leading	20.49	0.996	Leading	9.45
81	FLT104-3PH	0.985	Leading	17.38	0.984	Leading	17.87	0.984	Leading	18.34	0.986	Leading	17.04	0.989	Leading	14.96
82	FLT105-3PH	0.998	Leading	6.12	0.998	Leading	6.22	0.996	Leading	8.81	0.997	Leading	7.22	0.999	Leading	3.59
83	FLT106-3PH	1.000	Leading	0.93	0.951	Lagging	-32.42	0.997	Lagging	-8.07	0.981	Lagging	-19.95	1.000	Leading	2.32
84	FLT107-3PH	0.988	Leading	15.49	0.984	Leading	18.34	0.986	Leading	17.11	0.985	Leading	17.58	0.993	Leading	12.17
85	FLT108-3PH	0.971	Leading	24.46	0.970	Leading	24.88	0.966	Leading	26.85	0.972	Leading	24.22	0.978	Leading	21.51
87	FLT116-3PH	0.986	Leading	17.04	0.985	Leading	17.50	0.984	Leading	18.27	0.986	Leading	17.17	0.989	Leading	15.08
88	FLT117-3PH	N/A	N/A	N/A	N/A	N/A	N/A	0.984	Leading	18.24	0.985	Leading	17.39	0.989	Leading	15.08
89	FLT122-3PH	0.985	Leading	17.53	0.978	Leading	21.50	0.982	Leading	18.97	0.981	Leading	19.91	0.991	Leading	13.85
90	FLT123-3PH	0.995	Leading	10.30	0.991	Leading	13.86	0.989	Leading	14.71	0.987	Leading	16.32	0.992	Leading	13.01
91	FLT125-3PH	0.986	Leading	17.08	0.983	Leading	18.56	0.984	Leading	17.95	0.986	Leading	17.07	0.989	Leading	14.80
92	FLT126-3PH	0.985	Leading	17.29	0.985	Leading	17.58	0.984	Leading	18.30	0.986	Leading	17.09	0.989	Leading	14.90
93	FLT129-3PH	N/A	N/A	N/A	N/A	N/A	N/A	0.987	Leading	16.01	0.986	Leading	17.03	0.990	Leading	14.58
94	FLT130-3PH	0.985	Leading	17.27	0.984	Leading	17.82	N/A	N/A	N/A	N/A	N/A	N/A	N/A	N/A	N/A
95	FLT132-3PH	0.986	Leading	17.11	0.984	Leading	17.82	0.984	Leading	18.34	0.986	Leading	17.05	0.989	Leading	15.00
96	FLT133-3PH	0.986	Leading	17.00	0.985	Leading	17.78	0.984	Leading	18.35	0.986	Leading	17.06	0.989	Leading	15.03
97	FLT134-3PH	0.986	Leading	17.15	0.984	Leading	17.83	0.984	Leading	18.34	0.986	Leading	17.03	0.989	Leading	14.97
98	FLT135-3PH	0.985	Leading	17.35	0.984	Leading	17.86	0.984	Leading	18.32	0.986	Leading	17.04	0.989	Leading	14.95
99	FLT136-3PH	0.985	Leading	17.38	0.984	Leading	17.87	0.984	Leading	18.32	0.986	Leading	17.03	0.989	Leading	14.94
100	FLT137-3PH	0.985	Leading	17.38	0.984	Leading	17.86	0.984	Leading	18.34	0.986	Leading	17.04	0.989	Leading	14.97
101	FLT138-3PH	0.985	Leading	17.31	0.984	Leading	17.82	0.984	Leading	18.29	0.986	Leading	17.03	0.989	Leading	14.94
102	FLT139-3PH	0.985	Leading	17.38	0.984	Leading	17.90	0.984	Leading	18.34	0.986	Leading	17.05	0.989	Leading	14.97
103	FLT140-3PH	0.986	Leading	16.99	0.985	Leading	17.75	0.984	Leading	18.31	0.986	Leading	17.02	0.989	Leading	14.91
104	FLT141-3PH	0.985	Leading	17.38	0.984	Leading	17.86	0.984	Leading	18.30	0.986	Leading	17.01	0.989	Leading	14.85
105	FLT142-3PH	0.986	Leading	16.88	0.985	Leading	17.57	0.984	Leading	18.29	0.986	Leading	17.02	0.989	Leading	14.91
106	FLT143-3PH	0.986	Leading	16.74	0.985	Leading	17.65	0.984	Leading	18.25	0.986	Leading	17.03	0.989	Leading	14.92
107	FLT144-3PH	0.985	Leading	17.39	0.984	Leading	17.91	0.984	Leading	18.38	0.986	Leading	16.99	0.989	Leading	14.99
108	FLT145-3PH	0.985	Leading	17.30	0.984	Leading	17.86	0.984	Leading	18.34	0.986	Leading	17.04	0.989	Leading	14.98
109	FLT146-3PH	0.986	Leading	17.11	0.984	Leading	17.83	0.984	Leading	18.33	0.986	Leading	17.05	0.989	Leading	15.02
110	FLT147-3PH	0.985	Leading	17.33	0.984	Leading	17.87	0.984	Leading	18.35	0.986	Leading	17.02	0.989	Leading	14.95
111	FLT148-3PH	0.985	Leading	17.38	0.984	Leading	17.87	0.984	Leading	18.33	0.986	Leading	17.04	0.989	Leading	14.96
112	FLT148-3PH	0.966	Leading	26.68	0.964	Leading	27.60	0.959	Leading	29.56	0.964	Leading	27.40	0.971	Leading	24.73
113	FLT150-3PH	0.975	Leading	22.80	0.972	Leading	24.26	0.967	Leading	26.43	0.972	Leading	24.17	0.979	Leading	20.98
114	FLT151-3PH	0.987	Leading	16.29	0.973	Leading	23.77	0.981	Leading	19.74	0.983	Leading	18.67	0.988	Leading	15.48
115	FLT152-3PH	0.997	Leading	7.22	0.995	Leading	10.38	0.996	Leading	8.86	0.992	Leading	12.58	1.000	Leading	3.10
116	FLT153-3PH	0.988	Leading	15.47	0.987	Leading	16.53	0.986	Leading	16.65	0.988	Leading	15.80	0.992	Leading	13.02
117	FLT154-3PH	0.987	Leading	16.09	0.986	Leading	16.75	0.986	Leading	17.09	0.988	Leading	15.92	0.991	Leading	13.71
118	FLT155-3PH	0.994	Leading	10.70	0.997	Leading	8.14	0.992	Leading	13.03	0.996	Leading	8.94	0.993	Leading	12.13
119	FLT156-3PH	0.980	Leading	20.36	0.978	Leading	21.21	0.974	Leading	23.18	0.980	Leading	20.42	0.986	Leading	17.21
120	FLT157-3PH	0.992	Leading	12.65	0.985	Leading	17.70	0.984	Leading	18.02	0.986	Leading	16.97	0.990	Leading	14.46
121	FLT158-3PH	0.992	Leading	12.99	0.985	Leading	17.74	0.984	Leading	18.37	0.986	Leading	16.97	0.989	Leading	14.78
122	FLT159-3PH	1.000	Leading	0.46	0.993	Leading	11.66	1.000	Leading	1.56	0.994	Leading	10.60	1.000	Leading	2.78
123	FLT160-3PH	0.979	Leading	20.63	0.981	Leading	19.74	0.975	Leading	22.89	0.982	Leading	19.11	0.971	Leading	24.49
124	FLT161-3PH	0.987	Leading	16.43	0.986	Leading	17.13	0.984	Leading	18.01	0.986	Leading	16.70	0.990	Leading	14.50
125	FLT162-3PH	0.984	Leading	18.11	0.994	Leading	11.16	0.979	Leading	21.03	0.994	Leading	11.30	0.983	Leading	18.94
126	FLT163-3PH	0.985	Leading	17.38	0.995	Leading	9.59	0.992	Leading	13.10	0.991	Leading	13.17	0.996	Leading	8.88
127	FLT164-3PH	0.985	Leading	17.38	0.996	Leading	9.30	0.993	Leading	12.07	0.992	Leading	12.89	0.997	Leading	7.74
128	FLT165-3PH	0.996	Leading	8.56	0.993	Leading	11.54	0.979	Leading	20.94	0.995	Leading	9.77	0.998	Leading	5.51
129	FLT166-3PH	0.993	Leading	11.98	1.000	Lagging	-0.39	0.999	Leading	3.50	1.000	Leading	1.89	0.997	Leading	8.16
130	FLT167-3PH	0.985	Leading	17.38	0.984	Leading	17.87	0.984	Leading	18.34	0.986	Leading	17.04	0.989	Leading	14.96
131	FLT168-3PH	0.998	Lagging	-6.93	1.000	Lagging	-0.83	0.998	Lagging	-6.39	1.000	Leading	0.52	0.994	Lagging	-11.34
132	FLT169-3PH	0.985	Leading	17.38	0.984	Leading	17.87	0.984	Leading	18.34	0.986	Leading	17.04	0.989	Leading	14.96
133	FLT170-3PH	0.998	Leading	6.58	1.000	Leading	1.60	1.000	Leading	1.75	0.996	Lagging	-9.25	1.000	Leading	1.55
134	FLT171-3PH	0.985	Leading	17.38	0.984	Leading	17.87	0.984	Leading	18.34	0.986	Leading	17.04	0.989	Leading	14.96
135	FLT172-3PH	0.986	Leading	17.07	0.985	Leading	17.63	0.984	Leading	18.18	0.985	Leading	17.34	0.989	Leading	14.79
136	FLT173-3PH	0.985	Leading	17.38	0.984	Leading	17.87	0.984	Leading	18.34	0.986	Leading	17.04	0.989	Leading	14.96
137	FLT174-3PH	0.985	Leading	17.28	0.984	Leading	17.84	0.984	Leading	18.26	0.986	Leading	17.10	0.989	Leading	14.90
138	FLT175-3PH	0.985	Leading	17.31	0.985	Leading	17.77	0.984	Leading	18.24	0.986	Leading	16.94	0.989	Leading	14.86
139	FLT176-3PH	0.986	Leading	17.15	0.985	Leading	17.80	0.984	Leading	18.11	0.986	Leading	16.91	0.989	Leading	14.80
140	FLT177-3PH	0.985	Leading	17.40	0.984	Leading	17.84	0.984	Leading	18.35	0.986	Leading	17.03	0.989	Leading	14.97
141	FLT178-3PH	0.985	Leading	17.38	0.984	Leading	17.84	0.984	Leading	18.35	0.986	Leading	17.04	0.989	Leading	14.97
142	FLT179-3PH	0.985	Leading	17.41	0.984	Leading	17.87	0.984	Leading	18.32	0.986	Leading	17.01	0.989	Leading	15.00

Table 5-8 (Continued)
Power Factor Analysis: GEN-2015-020

Ref No.	Case	2015 Summer Peak			2015 Winter Peak			2020 Summer Peak			2020 Winter Peak			2025 Summer Peak		
		Power Factor		Q (MVAR)	Power Factor		Q (MVAR)	Power Factor		Q (MVAR)	Power Factor		Q (MVAR)	Power Factor		Q (MVAR)
143	FLT180-3PH	0.986	Leading	17.17	0.985	Leading	17.63	0.984	Leading	18.15	0.986	Leading	16.79	0.989	Leading	14.90
144	FLT181-3PH	0.985	Leading	17.38	0.984	Leading	17.87	0.984	Leading	18.34	0.986	Leading	17.04	0.989	Leading	14.96
145	FLT182-3PH	0.985	Leading	17.44	0.984	Leading	17.89	0.984	Leading	18.37	0.986	Leading	17.04	0.989	Leading	14.99
146	FLT183-3PH	0.986	Leading	16.88	0.986	Leading	17.19	0.985	Leading	17.81	0.987	Leading	16.45	0.990	Leading	14.23
147	FLT184-3PH	0.985	Leading	17.33	0.984	Leading	17.86	0.984	Leading	18.29	0.986	Leading	16.97	0.989	Leading	14.93
148	FLT185-3PH	0.985	Leading	17.37	0.984	Leading	17.90	0.984	Leading	18.32	0.986	Leading	17.10	0.989	Leading	14.81
149	FLT186-3PH	0.985	Leading	17.38	0.985	Leading	17.78	0.984	Leading	18.32	0.986	Leading	17.02	0.989	Leading	14.92
150	FLT187-3PH	0.985	Leading	17.37	0.985	Leading	17.71	0.984	Leading	18.32	0.986	Leading	16.97	0.989	Leading	14.91
151	FLT188-3PH	0.985	Leading	17.38	0.984	Leading	17.87	0.984	Leading	18.34	0.986	Leading	17.04	0.989	Leading	14.96
152	FLT189-3PH	0.985	Leading	17.38	0.984	Leading	17.86	0.984	Leading	18.33	0.986	Leading	17.04	0.989	Leading	14.96
153	FLT190-3PH	0.985	Leading	17.37	0.984	Leading	17.86	0.984	Leading	18.34	0.986	Leading	17.05	0.989	Leading	14.97
154	FLT191-3PH	0.985	Leading	17.33	0.985	Leading	17.77	0.984	Leading	18.31	0.986	Leading	17.07	0.989	Leading	14.95
155	FLT192-3PH	0.986	Leading	16.64	0.985	Leading	17.65	0.985	Leading	17.40	0.986	Leading	16.85	0.990	Leading	14.04
156	FLT193-3PH	0.985	Leading	17.38	0.984	Leading	17.87	0.984	Leading	18.34	0.986	Leading	17.04	0.989	Leading	14.96
157	FLT194-3PH	0.985	Leading	17.24	0.985	Leading	17.75	0.984	Leading	18.16	0.986	Leading	17.00	0.989	Leading	14.80
158	FLT195-3PH	0.986	Leading	16.93	0.985	Leading	17.56	0.984	Leading	17.87	0.986	Leading	16.80	0.989	Leading	14.61
159	FLT196-3PH	0.985	Leading	17.25	0.984	Leading	17.87	0.984	Leading	18.19	0.986	Leading	16.89	0.989	Leading	14.74
160	FLT197-3PH	0.985	Leading	17.29	0.984	Leading	18.02	0.984	Leading	18.10	0.986	Leading	17.06	0.989	Leading	14.98
161	FLT198-3PH	0.985	Leading	17.44	0.984	Leading	17.87	0.984	Leading	18.33	0.986	Leading	16.84	0.989	Leading	14.85
162	FLT199-3PH	0.986	Leading	17.01	0.985	Leading	17.73	0.984	Leading	18.38	0.986	Leading	17.19	0.989	Leading	15.16
163	FLT200-3PH	0.985	Leading	17.41	0.984	Leading	17.86	0.984	Leading	18.33	0.986	Leading	16.86	0.989	Leading	14.87
164	FLT201-3PH	0.985	Leading	17.22	0.985	Leading	17.81	0.984	Leading	18.20	0.986	Leading	16.99	0.989	Leading	14.77
165	FLT202-3PH	0.985	Leading	17.40	0.984	Leading	17.88	0.984	Leading	18.33	0.986	Leading	16.87	0.989	Leading	14.89
166	FLT203-3PH	0.986	Leading	17.09	0.985	Leading	17.75	0.984	Leading	18.30	0.986	Leading	17.09	0.989	Leading	15.10
167	FLT204-3PH	0.986	Leading	17.14	0.984	Leading	17.82	0.984	Leading	18.33	0.986	Leading	17.16	0.989	Leading	15.03
168	FLT205-3PH	0.985	Leading	17.38	0.984	Leading	17.86	0.984	Leading	18.33	0.986	Leading	17.04	0.989	Leading	14.95
169	FLT206-3PH	0.985	Leading	17.25	0.985	Leading	17.71	0.984	Leading	18.06	0.986	Leading	16.73	0.990	Leading	13.94
170	FLT207-3PH	0.985	Leading	17.46	0.984	Leading	18.03	0.983	Leading	18.52	0.986	Leading	17.05	0.989	Leading	14.97
171	FLT208-3PH	0.985	Leading	17.40	0.985	Leading	17.70	0.984	Leading	17.94	0.986	Leading	17.00	0.990	Leading	14.29
172	FLT209-3PH	0.985	Leading	17.63	0.984	Leading	18.39	0.984	Leading	18.01	0.987	Leading	16.35	0.991	Leading	13.67
173	FLT210-3PH	0.987	Leading	16.50	0.984	Leading	17.92	0.984	Leading	18.37	0.986	Leading	16.65	0.989	Leading	14.64
174	FLT211-3PH	0.985	Leading	17.25	0.984	Leading	17.83	0.984	Leading	18.32	0.986	Leading	17.05	0.989	Leading	14.99
175	FLT212-3PH	0.985	Leading	17.41	0.984	Leading	17.92	0.984	Leading	18.35	0.986	Leading	17.02	0.989	Leading	14.96
176	FLT213-3PH	0.985	Leading	17.38	0.984	Leading	17.87	0.984	Leading	18.33	0.986	Leading	17.04	0.989	Leading	14.95
177	FLT214-3PH	0.988	Leading	15.81	0.987	Leading	16.53	0.984	Leading	18.27	0.986	Leading	16.67	0.990	Leading	14.07
178	FLT215-3PH	0.987	Leading	16.37	0.986	Leading	17.01	0.987	Leading	15.99	0.986	Leading	16.81	0.990	Leading	14.59
179	FLT216-3PH	0.989	Leading	14.77	0.987	Leading	16.59	0.990	Leading	14.49	0.986	Leading	16.70	0.992	Leading	12.38
180	FLT217-3PH	0.985	Leading	17.38	0.984	Leading	17.86	0.984	Leading	18.28	0.986	Leading	17.04	0.989	Leading	14.96
181	FLT218-3PH	0.985	Leading	17.23	0.985	Leading	17.75	0.984	Leading	18.27	0.986	Leading	17.02	0.989	Leading	14.95
182	FLT219-3PH	0.985	Leading	17.37	0.984	Leading	17.86	0.984	Leading	18.33	0.986	Leading	17.04	0.989	Leading	14.96
183	FLT220-3PH	1.000	Leading	1.93	0.999	Lagging	-5.10	1.000	Lagging	-0.46	0.994	Lagging	-11.01	1.000	Leading	1.17
184	FLT221-3PH	N/A	N/A	N/A	0.986	Leading	17.03	N/A	N/A	N/A	0.986	Leading	16.83	0.990	Leading	14.46
186	FLT223-3PH	0.986	Leading	17.20	0.985	Leading	17.74	N/A	N/A	N/A	0.986	Leading	16.98	N/A	N/A	N/A
187	FLT224-3PH	0.985	Leading	17.23	0.985	Leading	17.66	N/A	N/A	N/A	0.986	Leading	16.97	N/A	N/A	N/A
188	FLT225-3PH	0.985	Leading	17.30	0.984	Leading	17.86	N/A	N/A	N/A	0.986	Leading	17.05	N/A	N/A	N/A

Study Generator GEN-2015-020

The Power Factor Analysis shows that GEN-2015-020 has a power factor range of 0.998 lagging (supplying) to 0.947 leading (absorbing) for the 2015 Summer Peak conditions, a power factor range of 0.951 lagging (supplying) to 0.932 leading (absorbing) for the 2015 Winter Peak conditions, a power factor range of 0.995 lagging (supplying) to 0.939 leading (absorbing) for the 2020 Summer Peak conditions, a power factor range of 0.981 lagging (supplying) to 0.921 leading (absorbing) for the 2020 Winter Peak conditions, and a power factor range of 0.989 lagging (supplying) to 0.942 leading (absorbing) for the 2025 Summer Peak conditions.

Table 5-9
Power Factor Analysis: GEN-2015-022

Ref No.	Case	2015 Summer Peak			2015 Winter Peak			2020 Summer Peak			2020 Winter Peak			2025 Summer Peak		
		Power Factor		Q (MVAR)	Power Factor		Q (MVAR)	Power Factor		Q (MVAR)	Power Factor		Q (MVAR)	Power Factor		Q (MVAR)
0	Base	0.977	Leading	24.49	0.977	Leading	24.62	0.981	Leading	22.33	0.979	Leading	23.53	0.982	Leading	21.33
1	FLT01-3PH	0.977	Leading	24.47	0.977	Leading	24.58	0.981	Leading	22.30	0.979	Leading	23.51	0.982	Leading	21.28
2	FLT02-3PH	0.977	Leading	24.43	0.977	Leading	24.55	0.981	Leading	22.26	0.979	Leading	23.50	0.982	Leading	21.25
3	FLT03-3PH	0.977	Leading	24.46	0.977	Leading	24.63	0.981	Leading	22.29	0.979	Leading	23.54	0.982	Leading	21.31
4	FLT04-3PH	0.977	Leading	24.48	0.977	Leading	24.64	0.981	Leading	22.32	0.979	Leading	23.49	0.982	Leading	21.28
5	FLT05-3PH	0.978	Leading	24.03	0.979	Leading	23.38	0.982	Leading	21.73	0.981	Leading	22.36	0.984	Leading	20.05
6	FLT06-3PH	0.977	Leading	24.29	0.978	Leading	23.81	0.981	Leading	22.10	0.980	Leading	22.88	0.983	Leading	20.83
7	FLT07-3PH	0.977	Leading	24.48	0.977	Leading	24.64	0.981	Leading	22.32	0.979	Leading	23.49	0.982	Leading	21.29
8	FLT08-3PH	0.977	Leading	24.58	0.976	Leading	25.19	0.979	Leading	23.55	0.977	Leading	24.51	0.980	Leading	22.56
9	FLT09-3PH	0.977	Leading	24.36	0.977	Leading	24.60	0.981	Leading	22.16	0.979	Leading	23.54	0.982	Leading	21.29
10	FLT10-3PH	0.977	Leading	24.23	0.977	Leading	24.49	0.981	Leading	22.40	0.979	Leading	23.58	0.982	Leading	21.24
11	FLT11-3PH	0.977	Leading	24.44	0.977	Leading	24.51	0.981	Leading	22.20	0.979	Leading	23.54	0.983	Leading	21.07
12	FLT12-3PH	0.977	Leading	24.23	0.977	Leading	24.43	0.981	Leading	22.37	0.979	Leading	23.53	0.982	Leading	21.32
13	FLT13-3PH	0.977	Leading	24.24	0.977	Leading	24.63	0.981	Leading	22.16	0.979	Leading	23.42	0.983	Leading	21.04
14	FLT14-3PH	0.978	Leading	24.09	0.977	Leading	24.39	0.981	Leading	22.36	0.979	Leading	23.59	0.983	Leading	21.19
15	FLT15-3PH	0.977	Leading	24.38	0.977	Leading	24.61	0.981	Leading	22.06	0.979	Leading	23.43	0.983	Leading	20.98
16	FLT16-3PH	0.977	Leading	24.50	0.977	Leading	24.63	0.981	Leading	22.33	0.979	Leading	23.52	0.982	Leading	21.32
17	FLT22-3PH	0.977	Leading	24.51	0.977	Leading	24.63	0.981	Leading	22.27	0.979	Leading	23.49	0.982	Leading	21.29
18	FLT23-3PH	0.977	Leading	24.49	0.977	Leading	24.60	0.981	Leading	22.29	0.979	Leading	23.51	0.982	Leading	21.32
19	FLT24-3PH	0.977	Leading	24.31	0.977	Leading	24.58	0.981	Leading	22.20	0.979	Leading	23.43	0.983	Leading	21.10
20	FLT25-3PH	0.977	Leading	24.45	0.977	Leading	24.59	0.981	Leading	22.28	0.979	Leading	23.51	0.982	Leading	21.27
21	FLT28-3PH	0.977	Leading	24.50	0.977	Leading	24.61	0.981	Leading	22.11	0.979	Leading	23.34	0.983	Leading	21.05
22	FLT29-3PH	N/A	N/A	N/A	0.977	Leading	24.66	N/A	N/A	N/A	N/A	N/A	N/A	0.983	Leading	21.13
23	FLT30-3PH	N/A	N/A	N/A	0.976	Leading	24.80	N/A	N/A	N/A	N/A	N/A	N/A	0.983	Leading	21.06
24	FLT31-3PH	N/A	N/A	N/A	0.977	Leading	24.38	N/A	N/A	N/A	N/A	N/A	N/A	0.980	Leading	22.70
25	FLT33-3PH	0.977	Leading	24.54	0.977	Leading	24.70	0.981	Leading	22.33	0.979	Leading	23.53	0.982	Leading	21.33
26	FLT34-3PH	0.977	Leading	24.49	0.977	Leading	24.63	0.981	Leading	22.26	0.979	Leading	23.48	0.983	Leading	21.22
27	FLT35-3PH	0.977	Leading	24.50	0.977	Leading	24.63	0.981	Leading	22.27	0.979	Leading	23.48	0.982	Leading	21.28
28	FLT38-3PH	0.977	Leading	24.49	0.977	Leading	24.62	0.981	Leading	22.32	0.979	Leading	23.53	0.982	Leading	21.33
29	FLT42-3PH	0.977	Leading	24.44	0.977	Leading	24.57	0.981	Leading	22.17	0.979	Leading	23.43	0.983	Leading	21.08
30	FLT45-3PH	0.977	Leading	24.44	0.977	Leading	24.56	0.981	Leading	22.22	0.979	Leading	23.46	0.983	Leading	21.18
31	FLT46-3PH	0.977	Leading	24.29	0.977	Leading	24.42	0.981	Leading	21.91	0.979	Leading	23.36	0.983	Leading	21.05
32	FLT47-3PH	0.977	Leading	24.45	0.977	Leading	24.57	0.981	Leading	22.25	0.979	Leading	23.46	0.982	Leading	21.25
33	FLT48-3PH	0.977	Leading	24.36	0.976	Leading	24.99	0.979	Leading	23.34	0.977	Leading	24.33	0.981	Leading	22.38
34	FLT49-3PH	0.982	Leading	21.51	0.982	Leading	21.72	0.985	Leading	19.65	0.980	Leading	22.83	0.984	Leading	20.47
35	FLT50-3PH	0.994	Leading	12.64	0.991	Leading	14.74	0.998	Leading	7.04	0.994	Leading	11.99	0.998	Leading	7.41
36	FLT51-3PH	0.979	Leading	23.40	0.977	Leading	24.63	0.981	Leading	22.22	0.979	Leading	23.40	0.982	Leading	21.35
38	FLT53-3PH	0.977	Leading	24.32	0.978	Leading	23.97	0.981	Leading	21.99	0.980	Leading	22.51	0.984	Leading	20.54
40	FLT55-3PH	0.978	Leading	23.86	0.978	Leading	23.66	0.980	Leading	22.46	0.979	Leading	23.37	0.982	Leading	21.41
41	FLT56-3PH	0.977	Leading	24.43	0.977	Leading	24.61	0.981	Leading	22.25	0.979	Leading	23.50	0.983	Leading	21.23
42	FLT57-3PH	0.977	Leading	24.42	0.977	Leading	24.58	0.981	Leading	22.22	0.979	Leading	23.47	0.983	Leading	21.20
43	FLT58-3PH	0.977	Leading	24.66	0.977	Leading	24.48	0.981	Leading	22.19	0.979	Leading	23.38	0.983	Leading	21.01
44	FLT59-3PH	0.977	Leading	24.30	0.977	Leading	24.54	0.981	Leading	22.23	0.979	Leading	23.52	0.983	Leading	21.22
47	FLT62-3PH	0.977	Leading	24.49	0.977	Leading	24.62	0.981	Leading	22.33	0.979	Leading	23.53	0.982	Leading	21.33
49	FLT64-3PH	0.978	Leading	23.92	0.981	Leading	22.40	0.981	Leading	22.19	0.977	Leading	24.45	0.981	Leading	22.30
51	FLT67-3PH	0.975	Leading	25.46	0.978	Leading	23.80	0.979	Leading	23.07	0.977	Leading	24.61	0.981	Leading	22.06
55	FLT71-3PH	0.977	Leading	24.46	0.976	Leading	24.77	0.981	Leading	21.99	0.979	Leading	23.35	0.984	Leading	20.10
56	FLT72-3PH	0.978	Leading	24.05	0.977	Leading	24.52	0.982	Leading	21.58	0.979	Leading	23.10	0.985	Leading	19.58
57	FLT73-3PH	0.990	Leading	15.58	0.987	Leading	18.34	0.989	Leading	16.82	0.983	Leading	21.18	0.992	Leading	14.07
58	FLT74-3PH	0.980	Leading	22.50	0.977	Leading	24.37	0.983	Leading	21.04	0.977	Leading	24.68	0.985	Leading	19.48
59	FLT75-3PH	0.975	Leading	25.55	0.976	Leading	25.25	0.980	Leading	22.90	0.978	Leading	23.79	0.983	Leading	21.19
60	FLT76-3PH	0.974	Leading	25.88	0.975	Leading	25.55	0.980	Leading	22.84	0.980	Leading	22.55	0.983	Leading	21.11
61	FLT77-3PH	0.975	Leading	25.56	0.976	Leading	25.21	0.980	Leading	22.71	0.978	Leading	23.86	0.982	Leading	21.59
62	FLT78-3PH	0.975	Leading	25.70	0.975	Leading	25.58	0.980	Leading	23.02	0.979	Leading	23.47	0.981	Leading	22.36
63	FLT79-3PH	0.976	Leading	25.16	0.976	Leading	25.12	0.980	Leading	22.69	0.978	Leading	23.71	0.982	Leading	21.80
64	FLT80-3PH	0.981	Leading	22.07	0.981	Leading	22.13	0.982	Leading	21.56	0.980	Leading	22.48	0.981	Leading	21.95
65	FLT81-3PH	0.977	Leading	24.55	0.976	Leading	24.77	0.982	Leading	21.66	0.979	Leading	23.22	0.984	Leading	20.00
66	FLT82-3PH	0.984	Leading	20.47	0.981	Leading	22.19	0.985	Leading	19.92	0.980	Leading	22.96	0.986	Leading	18.60
67	FLT88-3PH	0.981	Leading	22.09	0.981	Leading	22.27	0.981	Leading	21.98	0.980	Leading	22.55	0.983	Leading	21.11
68	FLT90-3PH	0.992	Leading	14.56	0.992	Leading	14.13	0.982	Leading	21.36	0.984	Leading	20.52	0.984	Leading	20.25
69	FLT91-3PH	0.984	Leading	20.01	0.980	Leading	22.59	0.983	Leading	21.02	0.982	Leading	21.81	0.982	Leading	21.82
70	FLT93-3PH	0.977	Leading	24.18	0.978	Leading	24.07	0.981	Leading	22.36	0.979	Leading	23.53	0.982	Leading	21.37
71	FLT94-3PH	0.977	Leading	24.52	0.976	Leading	24.79	0.981	Leading	22.29	0.979	Leading	23.36	0.982	Leading	21.35
72	FLT95-3PH	0.980	Leading	22.52	0.980	Leading	22.88	0.985	Leading	19.83	0.979	Leading	23.16	0.990	Leading	15.78
73	FLT96-3PH	0.977	Leading	24.49	0.977	Leading	24.62	0.981	Leading	22.33	0.979	Leading	23.53	0.982	Leading	21.33
74	FLT97-3PH	0.990	Leading	16.15	0.985	Leading	19.63	0.992	Leading	14.18	0.986	Leading	18.73	0.990	Leading	16.03

Table 5-9 (Continued)
Power Factor Analysis: GEN-2015-022

Ref No.	Case	2015 Summer Peak			2015 Winter Peak			2020 Summer Peak			2020 Winter Peak			2025 Summer Peak		
		Power Factor		Q (MVAR)	Power Factor		Q (MVAR)	Power Factor		Q (MVAR)	Power Factor		Q (MVAR)	Power Factor		Q (MVAR)
76	FLT99-3PH	0.973	Leading	26.82	0.969	Leading	28.47	0.975	Leading	25.35	0.973	Leading	26.75	0.977	Leading	24.20
77	FLT100-3PH	0.977	Leading	24.56	0.976	Leading	24.78	0.981	Leading	22.38	0.979	Leading	23.60	0.982	Leading	21.36
78	FLT101-3PH	0.977	Leading	24.47	0.977	Leading	24.63	0.981	Leading	22.30	0.979	Leading	23.51	0.982	Leading	21.30
79	FLT102-3PH	0.977	Leading	24.56	0.976	Leading	24.78	0.981	Leading	22.38	0.979	Leading	23.60	0.982	Leading	21.36
80	FLT103-3PH	0.976	Leading	24.80	0.976	Leading	25.04	0.980	Leading	22.58	0.978	Leading	23.87	0.982	Leading	21.43
81	FLT104-3PH	0.977	Leading	24.49	0.977	Leading	24.62	0.981	Leading	22.33	0.979	Leading	23.53	0.982	Leading	21.33
82	FLT105-3PH	0.977	Leading	24.35	0.977	Leading	24.18	0.981	Leading	22.21	0.979	Leading	23.42	0.983	Leading	21.21
83	FLT106-3PH	0.977	Leading	24.53	0.977	Leading	24.29	0.981	Leading	22.29	0.979	Leading	23.44	0.982	Leading	21.33
84	FLT107-3PH	0.977	Leading	24.50	0.977	Leading	24.63	0.981	Leading	22.34	0.979	Leading	23.54	0.982	Leading	21.34
85	FLT108-3PH	0.977	Leading	24.45	0.977	Leading	24.49	0.981	Leading	22.24	0.979	Leading	23.50	0.982	Leading	21.31
87	FLT116-3PH	0.991	Leading	15.12	0.991	Leading	15.31	0.987	Leading	18.32	0.993	Leading	13.29	0.986	Leading	18.61
88	FLT117-3PH	0.976	Leading	24.96	N/A	N/A	N/A	0.982	Leading	21.25	0.982	Leading	21.53	0.982	Leading	21.28
89	FLT122-3PH	N/A	N/A	N/A	0.975	Leading	25.36	0.980	Leading	22.58	0.978	Leading	24.08	0.982	Leading	21.60
90	FLT123-3PH	0.976	Lagging	-24.89	0.991	Lagging	-15.38	0.975	Lagging	-25.35	0.998	Lagging	-7.74	0.995	Lagging	-11.24
91	FLT125-3PH	0.992	Leading	14.27	0.997	Leading	8.68	0.995	Leading	10.73	0.988	Leading	17.41	0.987	Leading	18.50
92	FLT126-3PH	0.978	Leading	23.83	0.972	Leading	27.07	0.982	Leading	21.29	0.974	Leading	25.97	0.986	Leading	19.12
93	FLT129-3PH	N/A	N/A	N/A	N/A	N/A	N/A	0.985	Lagging	-19.55	0.979	Leading	23.06	0.999	Leading	4.82
94	FLT130-3PH	0.977	Leading	24.21	0.977	Leading	24.65	N/A	N/A	N/A	N/A	N/A	N/A	N/A	N/A	N/A
95	FLT132-3PH	0.976	Leading	24.81	0.976	Leading	24.84	0.981	Leading	22.38	0.978	Leading	23.73	0.983	Leading	21.09
96	FLT133-3PH	0.979	Leading	23.19	0.978	Leading	23.90	0.981	Leading	21.98	0.979	Leading	23.51	0.984	Leading	20.60
97	FLT134-3PH	0.976	Leading	25.18	0.976	Leading	25.04	0.980	Leading	22.56	0.978	Leading	23.82	0.982	Leading	21.35
98	FLT135-3PH	0.978	Leading	23.71	0.977	Leading	24.51	0.982	Leading	21.47	0.979	Leading	23.37	0.983	Leading	20.61
99	FLT136-3PH	0.977	Leading	24.49	0.977	Leading	24.62	0.980	Leading	22.65	0.979	Leading	23.57	0.982	Leading	21.78
100	FLT137-3PH	0.977	Leading	24.38	0.977	Leading	24.47	0.981	Leading	22.41	0.978	Leading	23.72	0.982	Leading	21.59
101	FLT138-3PH	0.979	Leading	23.48	0.978	Leading	23.93	0.983	Leading	20.76	0.980	Leading	22.77	0.984	Leading	20.30
102	FLT139-3PH	0.975	Leading	25.35	0.975	Leading	25.37	0.981	Leading	22.43	0.978	Leading	23.64	0.982	Leading	21.59
103	FLT140-3PH	0.977	Leading	24.72	0.977	Leading	24.64	0.980	Leading	22.57	0.979	Leading	23.53	0.982	Leading	21.58
104	FLT141-3PH	0.979	Leading	23.18	0.978	Leading	23.87	0.982	Leading	21.41	0.979	Leading	23.30	0.984	Leading	20.09
105	FLT142-3PH	0.982	Leading	21.82	0.980	Leading	22.56	0.982	Leading	21.48	0.979	Leading	23.31	0.983	Leading	20.63
106	FLT143-3PH	0.981	Leading	22.09	0.980	Leading	22.83	0.981	Leading	22.25	0.979	Leading	23.51	0.982	Leading	21.35
107	FLT144-3PH	0.977	Leading	24.42	0.977	Leading	24.58	0.981	Leading	22.26	0.979	Leading	23.41	0.983	Leading	21.17
108	FLT145-3PH	0.977	Leading	24.50	0.977	Leading	24.66	0.981	Leading	22.39	0.979	Leading	23.54	0.982	Leading	21.36
109	FLT146-3PH	0.977	Leading	24.55	0.977	Leading	24.69	0.981	Leading	22.39	0.979	Leading	23.53	0.982	Leading	21.37
110	FLT147-3PH	0.977	Leading	24.48	0.977	Leading	24.63	0.981	Leading	22.35	0.979	Leading	23.47	0.982	Leading	21.38
111	FLT148-3PH	0.977	Leading	24.45	0.977	Leading	24.61	0.981	Leading	22.27	0.979	Leading	23.53	0.982	Leading	21.27
112	FLT148-3PH	0.977	Leading	24.35	0.977	Leading	24.45	0.981	Leading	22.19	0.979	Leading	23.44	0.982	Leading	21.27
113	FLT150-3PH	0.977	Leading	24.49	0.977	Leading	24.60	0.981	Leading	22.26	0.979	Leading	23.55	0.982	Leading	21.30
114	FLT151-3PH	0.977	Leading	24.48	0.977	Leading	24.53	0.981	Leading	22.29	0.979	Leading	23.52	0.982	Leading	21.29
115	FLT152-3PH	0.977	Leading	24.39	0.977	Leading	24.61	0.981	Leading	22.23	0.979	Leading	23.51	0.982	Leading	21.30
116	FLT153-3PH	0.977	Leading	24.47	0.977	Leading	24.57	0.981	Leading	22.31	0.979	Leading	23.52	0.982	Leading	21.31
117	FLT154-3PH	0.977	Leading	24.56	0.976	Leading	24.78	0.981	Leading	22.38	0.979	Leading	23.60	0.982	Leading	21.36
118	FLT155-3PH	0.979	Leading	23.33	0.979	Leading	23.56	0.984	Leading	20.39	0.979	Leading	23.18	0.985	Leading	19.80
119	FLT156-3PH	0.977	Leading	24.51	0.977	Leading	24.62	0.981	Leading	22.29	0.979	Leading	23.54	0.982	Leading	21.33
120	FLT157-3PH	0.977	Leading	24.46	0.976	Leading	24.79	0.981	Leading	22.38	0.979	Leading	23.57	0.982	Leading	21.36
121	FLT158-3PH	0.977	Leading	24.46	0.976	Leading	24.78	0.981	Leading	22.37	0.979	Leading	23.58	0.982	Leading	21.36
122	FLT159-3PH	0.977	Leading	24.23	0.977	Leading	24.22	0.981	Leading	22.03	0.979	Leading	23.41	0.983	Leading	21.07
123	FLT160-3PH	0.977	Leading	24.70	0.978	Leading	24.13	0.981	Leading	22.40	0.979	Leading	23.39	0.982	Leading	21.35
124	FLT161-3PH	0.977	Leading	24.49	0.977	Leading	24.60	0.981	Leading	22.33	0.979	Leading	23.53	0.982	Leading	21.32
125	FLT162-3PH	0.976	Leading	24.90	0.972	Leading	26.94	0.979	Leading	23.52	0.977	Leading	24.69	0.981	Leading	22.30
126	FLT163-3PH	0.977	Leading	24.49	0.970	Leading	28.20	0.981	Leading	21.99	0.978	Leading	23.89	0.983	Leading	20.84
127	FLT164-3PH	0.977	Leading	24.49	0.970	Leading	28.11	0.982	Leading	21.84	0.978	Leading	23.80	0.983	Leading	20.73
128	FLT165-3PH	0.978	Leading	23.82	0.976	Leading	25.20	0.980	Leading	22.79	0.978	Leading	23.87	0.982	Leading	21.43
129	FLT166-3PH	0.977	Leading	24.44	0.978	Leading	24.14	0.981	Leading	22.19	0.979	Leading	23.45	0.982	Leading	21.29
130	FLT167-3PH	0.977	Leading	24.49	0.977	Leading	24.62	0.981	Leading	22.33	0.979	Leading	23.53	0.982	Leading	21.33
131	FLT168-3PH	0.977	Leading	24.18	0.978	Leading	24.16	0.981	Leading	21.97	0.979	Leading	23.42	0.983	Leading	21.01
132	FLT169-3PH	0.977	Leading	24.49	0.977	Leading	24.62	0.981	Leading	22.33	0.979	Leading	23.53	0.982	Leading	21.33
133	FLT170-3PH	0.977	Leading	24.44	0.977	Leading	24.34	0.981	Leading	22.20	0.979	Leading	23.35	0.982	Leading	21.24
134	FLT171-3PH	0.977	Leading	24.49	0.977	Leading	24.62	0.981	Leading	22.33	0.979	Leading	23.53	0.982	Leading	21.33
135	FLT172-3PH	0.978	Leading	23.94	0.980	Leading	22.54	0.981	Leading	22.19	0.977	Leading	24.39	0.981	Leading	22.24
136	FLT173-3PH	0.977	Leading	24.49	0.977	Leading	24.62	0.981	Leading	22.33	0.979	Leading	23.53	0.982	Leading	21.33
137	FLT174-3PH	0.916	Leading	48.98	0.994	Leading	12.43	0.891	Leading	57.14	0.975	Leading	25.30	0.864	Leading	65.30
138	FLT175-3PH	0.970	Lagging	-28.28	0.986	Leading	18.79	0.938	Lagging	-41.48	0.999	Leading	4.42	0.920	Lagging	-47.72
139	FLT176-3PH	0.922	Leading	46.98	0.946	Leading	38.44	0.926	Leading	45.75	0.945	Leading	38.94	0.940	Leading	40.81
140	FLT177-3PH	0.976	Leading	25.02	0.981	Leading	22.26	0.976	Leading	25.24	0.980	Leading	22.55	0.976	Leading	24.90
141	FLT178-3PH	0.972	Leading	27.23	0.976	Leading	24.91	0.966	Leading	29.76	0.972	Leading	27.07	0.970	Leading	28.18
142	FLT179-3PH	0.997	Leading	9.38	0.985	Leading	19.78	1.000	Leading	1.66	0.980	Leading	22.59	0.999	Leading	3.89

Table 5-9 (Continued)
Power Factor Analysis: GEN-2015-022

Ref No.	Case	2015 Summer Peak			2015 Winter Peak			2020 Summer Peak			2020 Winter Peak			2025 Summer Peak		
		Power Factor		Q (MVAR)	Power Factor		Q (MVAR)	Power Factor		Q (MVAR)	Power Factor		Q (MVAR)	Power Factor		Q (MVAR)
143	FLT180-3PH	0.982	Leading	21.51	0.981	Leading	22.12	0.985	Leading	19.56	0.984	Leading	20.11	0.983	Leading	20.85
144	FLT181-3PH	0.977	Leading	24.49	0.977	Leading	24.62	0.981	Leading	22.33	0.979	Leading	23.53	0.982	Leading	21.33
145	FLT182-3PH	0.978	Leading	24.02	0.976	Leading	25.08	0.979	Leading	23.07	0.978	Leading	24.08	0.980	Leading	22.53
146	FLT183-3PH	0.979	Leading	23.34	0.979	Leading	23.25	0.983	Leading	21.02	0.981	Leading	22.43	0.984	Leading	20.58
147	FLT184-3PH	0.977	Leading	24.26	0.961	Leading	32.32	0.985	Leading	19.55	0.962	Leading	31.70	0.994	Leading	12.12
148	FLT185-3PH	0.978	Leading	24.14	0.977	Leading	24.70	0.982	Leading	21.65	0.978	Leading	23.80	0.986	Leading	18.99
149	FLT186-3PH	0.978	Leading	24.09	0.977	Leading	24.56	0.981	Leading	22.22	0.978	Leading	23.76	0.983	Leading	20.94
150	FLT187-3PH	0.975	Leading	25.60	0.976	Leading	24.74	0.979	Leading	23.11	0.978	Leading	23.79	0.981	Leading	22.41
151	FLT188-3PH	0.977	Leading	24.49	0.977	Leading	24.62	0.981	Leading	22.33	0.979	Leading	23.53	0.982	Leading	21.33
152	FLT189-3PH	0.978	Leading	24.08	0.977	Leading	24.49	0.982	Leading	21.78	0.979	Leading	23.39	0.983	Leading	20.65
153	FLT190-3PH	0.978	Leading	23.94	0.978	Leading	24.00	0.980	Leading	22.95	0.978	Leading	23.66	0.982	Leading	21.80
154	FLT191-3PH	0.987	Leading	18.06	0.982	Leading	21.47	0.992	Leading	14.14	0.985	Leading	19.85	0.995	Leading	11.59
155	FLT192-3PH	0.972	Leading	27.08	0.976	Leading	25.00	0.972	Leading	27.30	0.979	Leading	23.15	0.963	Leading	31.20
156	FLT193-3PH	0.977	Leading	24.49	0.977	Leading	24.62	0.981	Leading	22.33	0.979	Leading	23.53	0.982	Leading	21.33
157	FLT194-3PH	0.984	Leading	20.53	0.979	Leading	23.18	0.989	Leading	17.06	0.980	Leading	22.83	0.989	Leading	16.76
158	FLT195-3PH	0.990	Leading	16.15	0.985	Leading	19.63	0.992	Leading	14.18	0.986	Leading	18.73	0.990	Leading	16.03
159	FLT196-3PH	0.976	Leading	24.75	0.989	Leading	17.06	0.975	Leading	25.43	0.991	Leading	15.41	0.980	Leading	22.82
160	FLT197-3PH	0.988	Leading	17.70	0.961	Leading	32.06	1.000	Leading	1.87	0.975	Leading	25.34	1.000	Leading	0.59
161	FLT198-3PH	0.977	Leading	24.47	0.977	Leading	24.35	0.981	Leading	22.25	0.979	Leading	23.24	0.983	Leading	21.19
162	FLT199-3PH	0.976	Leading	24.88	0.976	Leading	24.79	0.980	Leading	22.88	0.978	Leading	23.99	0.982	Leading	21.70
163	FLT200-3PH	0.977	Leading	24.46	0.977	Leading	24.36	0.981	Leading	22.25	0.979	Leading	23.25	0.983	Leading	21.21
164	FLT201-3PH	0.978	Leading	24.08	0.977	Leading	24.31	0.982	Leading	21.82	0.979	Leading	23.53	0.983	Leading	20.96
165	FLT202-3PH	0.977	Leading	24.48	0.977	Leading	24.41	0.981	Leading	22.28	0.979	Leading	23.27	0.982	Leading	21.24
166	FLT203-3PH	0.980	Leading	22.62	0.979	Leading	23.47	0.985	Leading	19.91	0.980	Leading	22.55	0.985	Leading	19.64
167	FLT204-3PH	0.977	Leading	24.64	0.976	Leading	24.84	0.980	Leading	22.49	0.978	Leading	23.95	0.982	Leading	21.45
168	FLT205-3PH	0.977	Leading	24.47	0.977	Leading	24.60	0.981	Leading	22.30	0.979	Leading	23.52	0.982	Leading	21.30
169	FLT206-3PH	0.976	Leading	25.12	0.977	Leading	24.21	0.980	Leading	22.82	0.979	Leading	23.53	0.982	Leading	21.83
170	FLT207-3PH	0.977	Leading	24.18	0.977	Leading	24.64	0.981	Leading	21.96	0.979	Leading	23.18	0.983	Leading	20.84
171	FLT208-3PH	0.977	Leading	24.49	0.978	Leading	24.09	0.981	Leading	22.11	0.978	Leading	23.69	0.983	Leading	21.17
172	FLT209-3PH	0.978	Leading	23.95	0.977	Leading	24.40	0.982	Leading	21.66	0.981	Leading	22.08	0.985	Leading	19.52
173	FLT210-3PH	0.977	Leading	24.52	0.976	Leading	24.77	0.981	Leading	22.23	0.980	Leading	22.71	0.983	Leading	20.99
174	FLT211-3PH	0.977	Leading	24.37	0.977	Leading	24.54	0.981	Leading	22.31	0.979	Leading	23.53	0.982	Leading	21.27
175	FLT212-3PH	0.977	Leading	24.45	0.977	Leading	24.63	0.981	Leading	22.34	0.979	Leading	23.53	0.982	Leading	21.41
176	FLT213-3PH	0.977	Leading	24.46	0.977	Leading	24.59	0.981	Leading	22.29	0.979	Leading	23.53	0.982	Leading	21.32
177	FLT214-3PH	1.000	Leading	2.39	0.999	Leading	5.36	0.983	Leading	20.79	0.999	Leading	5.73	0.998	Lagging	-6.43
178	FLT215-3PH	0.993	Leading	12.89	0.993	Leading	13.73	0.989	Lagging	-16.67	0.994	Leading	12.34	0.999	Leading	5.03
179	FLT216-3PH	0.993	Lagging	-12.86	0.998	Leading	7.11	0.994	Leading	12.22	0.998	Leading	7.15	0.954	Lagging	-35.30
180	FLT217-3PH	0.977	Leading	24.43	0.977	Leading	24.59	0.983	Leading	20.82	0.979	Leading	23.35	0.983	Leading	20.99
181	FLT218-3PH	0.979	Leading	23.18	0.979	Leading	23.54	0.983	Leading	21.22	0.979	Leading	23.26	0.983	Leading	20.70
182	FLT219-3PH	0.977	Leading	24.35	0.977	Leading	24.52	0.981	Leading	22.01	0.979	Leading	23.41	0.982	Leading	21.23
183	FLT220-3PH	0.977	Leading	24.25	0.980	Leading	22.91	0.981	Leading	22.12	0.979	Leading	23.25	0.982	Leading	21.24
184	FLT221-3PH	N/A	N/A	N/A	0.994	Leading	11.87	0.942	Lagging	-39.82	0.996	Leading	10.47	1.000	Leading	1.64
186	FLT223-3PH	0.978	Leading	23.97	0.977	Leading	24.47	N/A	N/A	N/A	0.980	Leading	22.58	N/A	N/A	N/A
187	FLT224-3PH	0.981	Leading	22.00	0.982	Leading	21.64	N/A	N/A	N/A	0.983	Leading	21.09	N/A	N/A	N/A
188	FLT225-3PH	0.978	Leading	24.05	0.977	Leading	24.60	N/A	N/A	N/A	0.979	Leading	23.29	N/A	N/A	N/A

Study Generator GEN-2015-022

The Power Factor Analysis shows that GEN-2015-022 has a power factor range of 0.970 lagging (supplying) to 0.916 leading (absorbing) for the 2015 Summer Peak conditions, a power factor range of 0.991 lagging (supplying) to 0.946 leading (absorbing) for the 2015 Winter Peak conditions, a power factor range of 0.938 lagging (supplying) to 0.891 leading (absorbing) for the 2020 Summer Peak conditions, a power factor range of 0.998 lagging (supplying) to 0.945 leading (absorbing) for the 2020 Winter Peak conditions, and a power factor range of 0.920 lagging (supplying) to 0.864 leading (absorbing) for the 2025 Summer Peak conditions.

Table 5-10
Power Factor Analysis: ASGI-2015-002

Ref No.	Case	2015 Summer Peak			2015 Winter Peak			2020 Summer Peak			2020 Winter Peak			2025 Summer Peak		
		Power Factor		Q (MVAR)	Power Factor		Q (MVAR)	Power Factor		Q (MVAR)	Power Factor		Q (MVAR)	Power Factor		Q (MVAR)
0	Base	0.955	Leading	0.62	0.953	Leading	0.63	0.982	Leading	0.39	0.969	Leading	0.51	0.982	Leading	0.38
1	FLT01-3PH	0.954	Leading	0.63	0.953	Leading	0.63	0.982	Leading	0.39	0.969	Leading	0.51	0.983	Leading	0.38
2	FLT02-3PH	0.955	Leading	0.62	0.953	Leading	0.63	0.982	Leading	0.38	0.969	Leading	0.51	0.983	Leading	0.38
3	FLT03-3PH	0.956	Leading	0.62	0.954	Leading	0.63	0.982	Leading	0.38	0.969	Leading	0.51	0.983	Leading	0.38
4	FLT04-3PH	0.954	Leading	0.63	0.953	Leading	0.64	0.982	Leading	0.39	0.969	Leading	0.51	0.983	Leading	0.37
5	FLT05-3PH	0.943	Leading	0.70	0.948	Leading	0.67	0.981	Leading	0.40	0.975	Leading	0.45	0.987	Leading	0.33
6	FLT06-3PH	0.938	Leading	0.74	0.942	Leading	0.71	0.980	Leading	0.41	0.973	Leading	0.47	0.984	Leading	0.36
7	FLT07-3PH	0.954	Leading	0.63	0.953	Leading	0.64	0.982	Leading	0.39	0.969	Leading	0.51	0.983	Leading	0.38
8	FLT08-3PH	0.956	Leading	0.61	0.945	Leading	0.69	0.977	Leading	0.43	0.974	Leading	0.47	0.987	Leading	0.33
9	FLT09-3PH	0.973	Leading	0.47	0.958	Leading	0.60	0.983	Leading	0.37	0.969	Leading	0.51	0.982	Leading	0.38
10	FLT10-3PH	0.954	Leading	0.63	0.951	Leading	0.65	0.982	Leading	0.39	0.971	Leading	0.49	0.984	Leading	0.36
11	FLT11-3PH	0.956	Leading	0.62	0.954	Leading	0.63	0.982	Leading	0.38	0.969	Leading	0.51	0.983	Leading	0.37
12	FLT12-3PH	0.958	Leading	0.60	0.955	Leading	0.62	0.982	Leading	0.38	0.969	Leading	0.51	0.983	Leading	0.37
13	FLT13-3PH	0.957	Leading	0.60	0.953	Leading	0.63	0.984	Leading	0.36	0.972	Leading	0.48	0.986	Leading	0.34
14	FLT14-3PH	0.972	Leading	0.48	0.961	Leading	0.57	0.984	Leading	0.36	0.969	Leading	0.51	0.984	Leading	0.36
15	FLT15-3PH	0.971	Leading	0.49	0.959	Leading	0.59	0.986	Leading	0.34	0.971	Leading	0.49	0.988	Leading	0.32
16	FLT16-3PH	0.954	Leading	0.63	0.953	Leading	0.64	0.982	Leading	0.39	0.969	Leading	0.51	0.982	Leading	0.38
17	FLT22-3PH	0.955	Leading	0.62	0.954	Leading	0.63	0.982	Leading	0.39	0.969	Leading	0.51	0.982	Leading	0.39
18	FLT23-3PH	0.955	Leading	0.62	0.953	Leading	0.63	0.982	Leading	0.39	0.969	Leading	0.51	0.982	Leading	0.38
19	FLT24-3PH	0.955	Leading	0.62	0.953	Leading	0.63	0.981	Leading	0.39	0.969	Leading	0.51	0.984	Leading	0.36
20	FLT25-3PH	0.956	Leading	0.62	0.954	Leading	0.63	0.982	Leading	0.38	0.969	Leading	0.51	0.983	Leading	0.38
21	FLT28-3PH	0.957	Leading	0.61	0.954	Leading	0.63	0.983	Leading	0.38	0.970	Leading	0.50	0.983	Leading	0.37
22	FLT29-3PH	N/A	N/A	N/A	0.954	Leading	0.63	N/A	N/A	N/A	N/A	N/A	N/A	0.983	Leading	0.37
23	FLT30-3PH	N/A	N/A	N/A	0.954	Leading	0.63	N/A	N/A	N/A	N/A	N/A	N/A	0.983	Leading	0.37
24	FLT31-3PH	N/A	N/A	N/A	0.955	Leading	0.62	N/A	N/A	N/A	N/A	N/A	N/A	0.978	Leading	0.43
25	FLT33-3PH	0.959	Leading	0.59	0.956	Leading	0.62	0.982	Leading	0.39	0.969	Leading	0.51	0.982	Leading	0.38
26	FLT34-3PH	0.955	Leading	0.62	0.953	Leading	0.63	0.983	Leading	0.38	0.970	Leading	0.50	0.984	Leading	0.37
27	FLT35-3PH	0.955	Leading	0.62	0.953	Leading	0.63	0.982	Leading	0.38	0.969	Leading	0.51	0.983	Leading	0.37
28	FLT38-3PH	0.955	Leading	0.62	0.954	Leading	0.63	0.982	Leading	0.38	0.969	Leading	0.51	0.983	Leading	0.38
29	FLT42-3PH	0.956	Leading	0.61	0.954	Leading	0.63	0.984	Leading	0.37	0.970	Leading	0.50	0.985	Leading	0.35
30	FLT45-3PH	0.958	Leading	0.60	0.955	Leading	0.62	0.983	Leading	0.37	0.970	Leading	0.50	0.984	Leading	0.37
31	FLT46-3PH	0.961	Leading	0.58	0.963	Leading	0.56	0.986	Leading	0.33	0.975	Leading	0.45	0.987	Leading	0.32
32	FLT47-3PH	0.957	Leading	0.61	0.955	Leading	0.62	0.983	Leading	0.37	0.971	Leading	0.50	0.984	Leading	0.36
33	FLT48-3PH	0.957	Leading	0.61	0.946	Leading	0.69	0.978	Leading	0.43	0.974	Leading	0.46	0.987	Leading	0.33
34	FLT49-3PH	0.988	Lagging	-0.31	0.998	Leading	0.12	0.993	Leading	0.24	0.966	Leading	0.53	0.982	Leading	0.39
35	FLT50-3PH	0.970	Leading	0.50	0.970	Leading	0.50	0.996	Leading	0.18	0.991	Leading	0.27	0.997	Leading	0.16
36	FLT51-3PH	1.000	Leading	0.06	0.970	Leading	0.50	0.989	Leading	0.30	0.973	Leading	0.48	0.984	Leading	0.36
38	FLT53-3PH	0.971	Leading	0.49	0.962	Leading	0.57	0.985	Leading	0.35	0.983	Leading	0.37	0.988	Leading	0.31
40	FLT55-3PH	0.981	Lagging	-0.40	0.992	Leading	0.26	0.996	Leading	0.19	0.975	Leading	0.46	0.996	Leading	0.18
41	FLT56-3PH	0.969	Leading	0.51	0.954	Leading	0.63	0.986	Leading	0.33	0.971	Leading	0.50	0.987	Leading	0.33
42	FLT57-3PH	0.970	Leading	0.50	0.956	Leading	0.62	0.987	Leading	0.32	0.972	Leading	0.49	0.987	Leading	0.32
43	FLT58-3PH	0.966	Leading	0.54	0.982	Leading	0.39	0.988	Leading	0.31	0.979	Leading	0.42	0.991	Leading	0.27
44	FLT59-3PH	0.967	Leading	0.53	0.959	Leading	0.59	0.989	Leading	0.29	0.976	Leading	0.45	0.993	Leading	0.23
47	FLT62-3PH	0.955	Leading	0.62	0.953	Leading	0.63	0.982	Leading	0.39	0.969	Leading	0.51	0.982	Leading	0.38
49	FLT64-3PH	0.966	Leading	0.54	0.964	Leading	0.55	0.985	Leading	0.35	0.967	Leading	0.52	0.982	Leading	0.39
51	FLT67-3PH	0.979	Leading	0.42	0.963	Leading	0.56	0.996	Leading	0.18	0.970	Leading	0.50	0.998	Leading	0.11
55	FLT71-3PH	0.939	Leading	0.73	0.960	Leading	0.59	0.956	Leading	0.61	0.945	Leading	0.69	0.877	Leading	1.10
56	FLT72-3PH	0.899	Leading	0.98	0.933	Leading	0.77	0.917	Leading	0.87	0.907	Leading	0.93	0.815	Leading	1.42
57	FLT73-3PH	0.953	Leading	0.64	0.940	Leading	0.73	0.974	Leading	0.47	0.964	Leading	0.55	0.971	Leading	0.50
58	FLT74-3PH	0.949	Leading	0.67	0.957	Leading	0.61	0.980	Leading	0.40	0.977	Leading	0.44	0.980	Leading	0.40
59	FLT75-3PH	0.999	Lagging	-0.09	1.000	Leading	0.03	0.994	Lagging	-0.22	1.000	Leading	0.01	0.999	Leading	0.11
60	FLT76-3PH	0.947	Leading	0.68	0.948	Leading	0.67	0.981	Leading	0.40	0.977	Leading	0.44	0.984	Leading	0.36
61	FLT77-3PH	0.516	Lagging	-3.32	0.784	Lagging	-1.58	0.768	Lagging	-1.67	0.724	Lagging	-1.90	0.867	Lagging	-1.15
62	FLT78-3PH	0.615	Leading	2.56	0.662	Leading	2.26	0.688	Leading	2.11	0.991	Leading	0.28	0.550	Leading	3.03
63	FLT79-3PH	0.920	Leading	0.85	0.924	Leading	0.83	0.960	Leading	0.58	0.955	Leading	0.62	0.951	Leading	0.65
64	FLT80-3PH	0.852	Leading	1.23	0.873	Leading	1.12	0.973	Leading	0.47	0.957	Leading	0.61	0.998	Leading	0.14
65	FLT81-3PH	0.605	Lagging	-2.63	0.591	Lagging	-2.73	0.799	Lagging	-1.50	0.835	Lagging	-1.32	0.575	Lagging	-2.85
66	FLT82-3PH	0.997	Leading	0.15	0.983	Leading	0.38	1.000	Lagging	-0.03	0.981	Leading	0.40	0.999	Lagging	-0.07
67	FLT88-3PH	0.947	Leading	0.68	0.948	Leading	0.67	0.973	Leading	0.47	0.957	Leading	0.61	0.977	Leading	0.43
68	FLT90-3PH	0.991	Lagging	-0.28	1.000	Lagging	-0.05	0.993	Leading	0.24	0.991	Leading	0.28	0.990	Leading	0.29
69	FLT91-3PH	0.978	Leading	0.43	0.962	Leading	0.57	0.987	Leading	0.32	0.979	Leading	0.42	0.979	Leading	0.42
70	FLT93-3PH	0.971	Leading	0.49	0.972	Leading	0.48	0.983	Leading	0.37	0.971	Leading	0.49	0.984	Leading	0.37
71	FLT94-3PH	0.959	Leading	0.59	0.942	Leading	0.72	0.985	Leading	0.35	0.985	Leading	0.35	0.984	Leading	0.36
72	FLT95-3PH	0.994	Leading	0.22	0.985	Leading	0.34	1.000	Leading	0.01	0.979	Leading	0.41	0.971	Lagging	-0.50
73	FLT96-3PH	0.955	Leading	0.62	0.953	Leading	0.63	0.982	Leading	0.39	0.969	Leading	0.51	0.982	Leading	0.38
74	FLT97-3PH	0.961	Leading	0.58	0.960	Leading	0.58	0.989	Leading	0.30	0.977	Leading	0.44	0.986	Leading	0.33

Table 5-10 (Continued)
Power Factor Analysis: ASGI-2015-002

Ref No.	Case	2015 Summer Peak			2015 Winter Peak			2020 Summer Peak			2020 Winter Peak			2025 Summer Peak		
		Power Factor		Q (MVAR)	Power Factor		Q (MVAR)	Power Factor		Q (MVAR)	Power Factor		Q (MVAR)	Power Factor		Q (MVAR)
76	FLT99-3PH	0.931	Leading	0.78	0.933	Leading	0.77	0.974	Leading	0.47	0.952	Leading	0.64	0.976	Leading	0.45
77	FLT100-3PH	0.955	Leading	0.62	0.953	Leading	0.63	0.982	Leading	0.39	0.969	Leading	0.51	0.982	Leading	0.38
78	FLT101-3PH	0.955	Leading	0.62	0.954	Leading	0.63	0.982	Leading	0.39	0.969	Leading	0.51	0.983	Leading	0.38
79	FLT102-3PH	0.955	Leading	0.62	0.953	Leading	0.63	0.982	Leading	0.39	0.969	Leading	0.51	0.982	Leading	0.38
80	FLT103-3PH	0.956	Leading	0.62	0.953	Leading	0.64	0.982	Leading	0.39	0.968	Leading	0.52	0.982	Leading	0.38
81	FLT104-3PH	0.955	Leading	0.62	0.953	Leading	0.63	0.982	Leading	0.39	0.969	Leading	0.51	0.982	Leading	0.38
82	FLT105-3PH	0.956	Leading	0.62	0.954	Leading	0.63	0.982	Leading	0.38	0.969	Leading	0.51	0.983	Leading	0.38
83	FLT106-3PH	0.956	Leading	0.61	0.955	Leading	0.62	0.982	Leading	0.38	0.969	Leading	0.51	0.983	Leading	0.38
84	FLT107-3PH	0.955	Leading	0.62	0.954	Leading	0.63	0.982	Leading	0.39	0.969	Leading	0.51	0.982	Leading	0.38
85	FLT108-3PH	0.955	Leading	0.62	0.954	Leading	0.63	0.982	Leading	0.38	0.969	Leading	0.51	0.983	Leading	0.38
87	FLT116-3PH	0.963	Leading	0.56	0.965	Leading	0.54	0.990	Leading	0.29	0.984	Leading	0.36	0.986	Leading	0.34
88	FLT117-3PH	N/A	N/A	N/A	N/A	N/A	N/A	0.997	Leading	0.15	0.980	Leading	0.40	0.985	Leading	0.35
89	FLT122-3PH	0.952	Leading	0.64	0.950	Leading	0.66	0.981	Leading	0.39	0.966	Leading	0.53	0.982	Leading	0.39
90	FLT123-3PH	0.923	Lagging	-0.84	0.983	Lagging	-0.38	0.985	Lagging	-0.36	1.000	Lagging	-0.04	1.000	Lagging	-0.02
91	FLT125-3PH	0.983	Lagging	-0.37	0.962	Lagging	-0.57	0.995	Lagging	-0.21	0.997	Lagging	-0.15	0.999	Leading	0.09
92	FLT126-3PH	0.959	Leading	0.59	0.953	Leading	0.63	0.983	Leading	0.38	0.970	Leading	0.50	0.983	Leading	0.38
93	FLT129-3PH	N/A	N/A	N/A	N/A	N/A	N/A	0.999	Leading	0.06	0.960	Leading	0.58	0.978	Leading	0.42
94	FLT130-3PH	0.941	Leading	0.72	0.940	Leading	0.73	N/A	N/A	N/A	N/A	N/A	N/A	N/A	N/A	N/A
95	FLT132-3PH	0.842	Lagging	-1.28	0.975	Lagging	-0.45	0.966	Leading	0.53	0.978	Lagging	-0.42	0.799	Leading	1.50
96	FLT133-3PH	0.854	Lagging	-1.22	0.884	Lagging	-1.06	0.856	Lagging	-1.21	1.000	Lagging	-0.06	0.661	Lagging	-2.27
97	FLT134-3PH	0.685	Lagging	-2.13	0.887	Lagging	-1.04	0.979	Lagging	-0.42	0.854	Lagging	-1.22	0.988	Leading	0.31
98	FLT135-3PH	0.996	Leading	0.17	0.947	Leading	0.68	1.000	Lagging	-0.05	0.963	Leading	0.56	1.000	Lagging	-0.06
99	FLT136-3PH	0.955	Leading	0.62	0.953	Leading	0.63	0.989	Leading	0.29	0.977	Leading	0.44	0.991	Leading	0.27
100	FLT137-3PH	0.957	Leading	0.61	0.960	Leading	0.59	0.976	Leading	0.44	0.946	Leading	0.68	0.963	Leading	0.56
101	FLT138-3PH	0.948	Leading	0.67	0.949	Leading	0.66	0.978	Leading	0.42	0.967	Leading	0.53	0.976	Leading	0.44
102	FLT139-3PH	0.917	Leading	0.87	0.913	Leading	0.89	0.980	Leading	0.41	0.967	Leading	0.52	0.971	Leading	0.49
103	FLT140-3PH	0.645	Leading	2.37	0.791	Leading	1.55	0.854	Leading	1.22	0.947	Leading	0.68	0.840	Leading	1.29
104	FLT141-3PH	0.627	Lagging	-2.49	0.808	Lagging	-1.46	0.601	Lagging	-2.66	0.886	Lagging	-1.05	0.471	Lagging	-3.75
105	FLT142-3PH	0.812	Lagging	-1.44	0.990	Lagging	-0.29	0.989	Lagging	-0.30	0.995	Leading	0.21	0.984	Lagging	-0.36
106	FLT143-3PH	0.996	Leading	0.17	0.995	Leading	0.21	0.968	Leading	0.52	0.969	Leading	0.51	0.969	Leading	0.51
107	FLT144-3PH	0.978	Leading	0.43	0.965	Leading	0.55	0.990	Leading	0.28	0.966	Leading	0.54	0.996	Leading	0.18
108	FLT145-3PH	0.946	Leading	0.69	0.933	Leading	0.77	0.974	Leading	0.46	0.955	Leading	0.62	0.978	Leading	0.43
109	FLT146-3PH	0.928	Leading	0.80	0.928	Leading	0.80	0.989	Leading	0.31	0.968	Leading	0.52	0.986	Leading	0.34
110	FLT147-3PH	0.940	Leading	0.73	0.948	Leading	0.67	0.971	Leading	0.50	0.972	Leading	0.48	0.965	Leading	0.54
111	FLT148-3PH	0.962	Leading	0.57	0.955	Leading	0.62	0.987	Leading	0.32	0.970	Leading	0.50	0.988	Leading	0.31
112	FLT148-3PH	0.956	Leading	0.61	0.954	Leading	0.63	0.982	Leading	0.38	0.969	Leading	0.51	0.983	Leading	0.38
113	FLT150-3PH	0.956	Leading	0.61	0.954	Leading	0.63	0.982	Leading	0.38	0.969	Leading	0.51	0.983	Leading	0.38
114	FLT151-3PH	0.956	Leading	0.62	0.954	Leading	0.63	0.982	Leading	0.38	0.969	Leading	0.51	0.983	Leading	0.38
115	FLT152-3PH	0.956	Leading	0.62	0.954	Leading	0.63	0.982	Leading	0.38	0.969	Leading	0.51	0.983	Leading	0.38
116	FLT153-3PH	0.955	Leading	0.62	0.954	Leading	0.63	0.982	Leading	0.39	0.969	Leading	0.51	0.983	Leading	0.38
117	FLT154-3PH	0.955	Leading	0.62	0.953	Leading	0.63	0.982	Leading	0.39	0.969	Leading	0.51	0.982	Leading	0.38
118	FLT155-3PH	0.965	Leading	0.54	0.959	Leading	0.59	0.985	Leading	0.35	0.971	Leading	0.49	0.984	Leading	0.36
119	FLT156-3PH	0.955	Leading	0.62	0.954	Leading	0.63	0.982	Leading	0.38	0.969	Leading	0.51	0.982	Leading	0.38
120	FLT157-3PH	0.956	Leading	0.62	0.953	Leading	0.63	0.982	Leading	0.39	0.969	Leading	0.51	0.982	Leading	0.38
121	FLT158-3PH	0.956	Leading	0.62	0.953	Leading	0.63	0.982	Leading	0.39	0.969	Leading	0.51	0.982	Leading	0.38
122	FLT159-3PH	0.957	Leading	0.61	0.955	Leading	0.62	0.983	Leading	0.38	0.970	Leading	0.51	0.983	Leading	0.37
123	FLT160-3PH	0.956	Leading	0.62	0.954	Leading	0.63	0.982	Leading	0.38	0.970	Leading	0.50	0.983	Leading	0.38
124	FLT161-3PH	0.955	Leading	0.62	0.954	Leading	0.63	0.982	Leading	0.39	0.969	Leading	0.51	0.982	Leading	0.38
125	FLT162-3PH	0.956	Leading	0.61	0.950	Leading	0.66	0.982	Leading	0.38	0.965	Leading	0.54	0.983	Leading	0.38
126	FLT163-3PH	0.955	Leading	0.62	0.949	Leading	0.67	0.984	Leading	0.37	0.970	Leading	0.50	0.985	Leading	0.35
127	FLT164-3PH	0.955	Leading	0.62	0.949	Leading	0.67	0.984	Leading	0.36	0.970	Leading	0.50	0.985	Leading	0.35
128	FLT165-3PH	0.976	Leading	0.44	0.962	Leading	0.57	0.983	Leading	0.38	0.967	Leading	0.53	0.982	Leading	0.38
129	FLT166-3PH	0.958	Leading	0.60	0.956	Leading	0.62	0.982	Leading	0.38	0.969	Leading	0.51	0.983	Leading	0.38
130	FLT167-3PH	0.955	Leading	0.62	0.953	Leading	0.63	0.982	Leading	0.39	0.969	Leading	0.51	0.982	Leading	0.38
131	FLT168-3PH	0.957	Leading	0.60	0.955	Leading	0.62	0.983	Leading	0.37	0.970	Leading	0.50	0.983	Leading	0.37
132	FLT169-3PH	0.955	Leading	0.62	0.953	Leading	0.63	0.982	Leading	0.39	0.969	Leading	0.51	0.982	Leading	0.38
133	FLT170-3PH	0.955	Leading	0.62	0.954	Leading	0.63	0.982	Leading	0.38	0.970	Leading	0.50	0.983	Leading	0.37
134	FLT171-3PH	0.955	Leading	0.62	0.953	Leading	0.63	0.982	Leading	0.39	0.969	Leading	0.51	0.982	Leading	0.38
135	FLT172-3PH	0.965	Leading	0.54	0.963	Leading	0.56	0.985	Leading	0.35	0.968	Leading	0.52	0.982	Leading	0.39
136	FLT173-3PH	0.955	Leading	0.62	0.953	Leading	0.63	0.982	Leading	0.39	0.969	Leading	0.51	0.982	Leading	0.38
137	FLT174-3PH	0.959	Leading	0.59	0.950	Leading	0.66	0.987	Leading	0.33	0.968	Leading	0.52	0.988	Leading	0.31
138	FLT175-3PH	0.962	Leading	0.56	0.958	Leading	0.60	0.987	Leading	0.33	0.975	Leading	0.46	0.988	Leading	0.31
139	FLT176-3PH	0.950	Leading	0.65	0.956	Leading	0.62	0.981	Leading	0.40	0.971	Leading	0.49	0.980	Leading	0.41
140	FLT177-3PH	0.958	Leading	0.60	0.952	Leading	0.64	0.984	Leading	0.36	0.969	Leading	0.51	0.985	Leading	0.35
141	FLT178-3PH	0.958	Leading	0.60	0.955	Leading	0.62	0.984	Leading	0.36	0.972	Leading	0.49	0.985	Leading	0.35
142	FLT179-3PH	0.960	Leading	0.58	0.955	Leading	0.62	0.986	Leading	0.34	0.969	Leading	0.51	0.986	Leading	0.34

Table 5-10 (Continued)
Power Factor Analysis: ASGI-2015-002

Ref No.	Case	2015 Summer Peak			2015 Winter Peak			2020 Summer Peak			2020 Winter Peak			2025 Summer Peak		
		Power Factor		Q (MVAR)	Power Factor		Q (MVAR)	Power Factor		Q (MVAR)	Power Factor		Q (MVAR)	Power Factor		Q (MVAR)
143	FLT180-3PH	0.957	Leading	0.60	0.956	Leading	0.62	0.983	Leading	0.37	0.971	Leading	0.49	0.983	Leading	0.38
144	FLT181-3PH	0.955	Leading	0.62	0.953	Leading	0.63	0.982	Leading	0.39	0.969	Leading	0.51	0.982	Leading	0.38
145	FLT182-3PH	0.958	Leading	0.60	0.955	Leading	0.62	0.983	Leading	0.37	0.971	Leading	0.49	0.983	Leading	0.37
146	FLT183-3PH	0.959	Leading	0.59	0.957	Leading	0.61	0.984	Leading	0.37	0.971	Leading	0.49	0.984	Leading	0.37
147	FLT184-3PH	0.957	Leading	0.61	0.955	Leading	0.62	0.984	Leading	0.36	0.971	Leading	0.49	0.985	Leading	0.35
148	FLT185-3PH	0.955	Leading	0.62	0.953	Leading	0.63	0.982	Leading	0.39	0.969	Leading	0.51	0.983	Leading	0.38
149	FLT186-3PH	0.958	Leading	0.60	0.954	Leading	0.63	0.983	Leading	0.38	0.969	Leading	0.51	0.984	Leading	0.37
150	FLT187-3PH	0.952	Leading	0.64	0.951	Leading	0.65	0.981	Leading	0.40	0.966	Leading	0.53	0.980	Leading	0.40
151	FLT188-3PH	0.955	Leading	0.62	0.953	Leading	0.63	0.982	Leading	0.39	0.969	Leading	0.51	0.982	Leading	0.38
152	FLT189-3PH	0.956	Leading	0.62	0.954	Leading	0.63	0.982	Leading	0.38	0.969	Leading	0.51	0.983	Leading	0.37
153	FLT190-3PH	0.955	Leading	0.62	0.954	Leading	0.63	0.982	Leading	0.38	0.970	Leading	0.50	0.983	Leading	0.37
154	FLT191-3PH	0.950	Leading	0.66	0.953	Leading	0.64	0.979	Leading	0.42	0.969	Leading	0.51	0.978	Leading	0.43
155	FLT192-3PH	0.953	Leading	0.64	0.955	Leading	0.62	0.980	Leading	0.41	0.970	Leading	0.51	0.979	Leading	0.42
156	FLT193-3PH	0.955	Leading	0.62	0.953	Leading	0.63	0.982	Leading	0.39	0.969	Leading	0.51	0.982	Leading	0.38
157	FLT194-3PH	0.956	Leading	0.62	0.954	Leading	0.63	0.983	Leading	0.38	0.969	Leading	0.51	0.983	Leading	0.37
158	FLT195-3PH	0.961	Leading	0.58	0.960	Leading	0.58	0.989	Leading	0.30	0.977	Leading	0.44	0.986	Leading	0.33
159	FLT196-3PH	0.968	Leading	0.52	0.966	Leading	0.54	0.981	Leading	0.39	0.976	Leading	0.44	0.982	Leading	0.38
160	FLT197-3PH	0.953	Leading	0.64	0.970	Leading	0.50	0.975	Leading	0.46	0.974	Leading	0.46	0.972	Leading	0.48
161	FLT198-3PH	0.956	Leading	0.61	0.966	Leading	0.54	0.984	Leading	0.36	0.987	Leading	0.32	0.985	Leading	0.35
162	FLT199-3PH	0.987	Leading	0.32	0.989	Leading	0.30	0.986	Leading	0.33	0.974	Leading	0.46	0.993	Leading	0.23
163	FLT200-3PH	0.957	Leading	0.60	0.965	Leading	0.54	0.984	Leading	0.36	0.986	Leading	0.33	0.985	Leading	0.35
164	FLT201-3PH	0.985	Leading	0.36	0.965	Leading	0.54	0.996	Leading	0.18	0.963	Leading	0.56	0.999	Leading	0.07
165	FLT202-3PH	0.956	Leading	0.61	0.963	Leading	0.56	0.983	Leading	0.37	0.984	Leading	0.36	0.984	Leading	0.37
166	FLT203-3PH	0.964	Leading	0.55	0.956	Leading	0.62	0.979	Leading	0.41	0.967	Leading	0.53	0.972	Leading	0.49
167	FLT204-3PH	0.967	Leading	0.52	0.977	Leading	0.44	0.985	Leading	0.35	0.956	Leading	0.61	0.984	Leading	0.36
168	FLT205-3PH	0.957	Leading	0.60	0.954	Leading	0.63	0.983	Leading	0.37	0.970	Leading	0.50	0.984	Leading	0.36
169	FLT206-3PH	0.937	Leading	0.75	0.941	Leading	0.72	0.956	Leading	0.61	0.949	Leading	0.67	0.947	Leading	0.68
170	FLT207-3PH	0.999	Leading	0.11	0.994	Leading	0.22	0.998	Lagging	-0.11	0.999	Leading	0.11	0.991	Lagging	-0.27
171	FLT208-3PH	0.989	Leading	0.29	0.982	Leading	0.39	0.997	Leading	0.17	0.956	Leading	0.61	1.000	Leading	0.01
172	FLT209-3PH	0.995	Leading	0.19	0.998	Leading	0.13	0.999	Leading	0.07	1.000	Leading	0.04	1.000	Lagging	-0.03
173	FLT210-3PH	0.984	Leading	0.36	0.946	Leading	0.69	0.960	Leading	0.59	0.940	Leading	0.72	0.973	Leading	0.47
174	FLT211-3PH	0.972	Leading	0.49	0.960	Leading	0.58	0.992	Leading	0.25	0.982	Leading	0.38	0.996	Leading	0.17
175	FLT212-3PH	0.942	Leading	0.71	0.947	Leading	0.68	0.976	Leading	0.45	0.966	Leading	0.54	0.974	Leading	0.47
176	FLT213-3PH	0.960	Leading	0.58	0.956	Leading	0.61	0.986	Leading	0.34	0.972	Leading	0.49	0.988	Leading	0.31
177	FLT214-3PH	0.944	Leading	0.70	0.958	Leading	0.60	0.986	Leading	0.33	0.970	Leading	0.50	0.976	Leading	0.45
178	FLT215-3PH	0.913	Leading	0.89	0.927	Leading	0.81	0.966	Leading	0.53	0.951	Leading	0.65	0.965	Leading	0.55
179	FLT216-3PH	0.967	Leading	0.53	0.982	Leading	0.38	0.996	Leading	0.19	0.960	Leading	0.58	0.994	Leading	0.22
180	FLT217-3PH	0.955	Leading	0.62	0.953	Leading	0.63	0.982	Leading	0.39	0.970	Leading	0.51	0.981	Leading	0.40
181	FLT218-3PH	0.946	Leading	0.68	0.946	Leading	0.69	0.978	Leading	0.42	0.954	Leading	0.63	0.979	Leading	0.42
182	FLT219-3PH	0.954	Leading	0.62	0.953	Leading	0.64	0.982	Leading	0.39	0.969	Leading	0.51	0.982	Leading	0.39
183	FLT220-3PH	0.958	Leading	0.60	0.957	Leading	0.60	0.982	Leading	0.38	0.968	Leading	0.52	0.982	Leading	0.38
184	FLT221-3PH	N/A	N/A	N/A	0.960	Leading	0.58	N/A	N/A	N/A	0.980	Leading	0.41	0.978	Leading	0.42
186	FLT223-3PH	0.932	Leading	0.78	0.931	Leading	0.78	N/A	N/A	N/A	0.953	Leading	0.63	N/A	N/A	N/A
187	FLT224-3PH	0.960	Leading	0.58	0.963	Leading	0.56	N/A	N/A	N/A	0.976	Leading	0.45	N/A	N/A	N/A
188	FLT225-3PH	0.946	Leading	0.69	0.951	Leading	0.65	N/A	N/A	N/A	0.965	Leading	0.54	N/A	N/A	N/A

Study Generator ASGI-2015-002

The Power Factor Analysis shows that ASGI-2015-002 has a power factor range of 0.515 lagging (supplying) to 0.614 leading (absorbing) for the 2015 Summer Peak conditions, a power factor range of 0.591 lagging (supplying) to 0.661 leading (absorbing) for the 2015 Winter Peak conditions, a power factor range of 0.601 lagging (supplying) to 0.688 leading (absorbing) for the 2020 Summer Peak conditions, a power factor range of 0.742 lagging (supplying) to 0.907 leading (absorbing) for the 2020 Winter Peak conditions, and a power factor range of 0.471 lagging (supplying) to 0.550 leading (absorbing) for the 2025 Summer Peak conditions.

Table 5-11
Power Factor Analysis: ASGI-2015-003

Ref No.	Case	2015 Summer Peak			2015 Winter Peak			2020 Summer Peak			2020 Winter Peak			2025 Summer Peak		
		Power Factor		Q (MVAR)	Power Factor		Q (MVAR)	Power Factor		Q (MVAR)	Power Factor		Q (MVAR)	Power Factor		Q (MVAR)
0	Base	0.973	Lagging	-7.06	0.980	Lagging	-6.11	0.984	Lagging	-5.51	0.976	Lagging	-6.71	0.974	Lagging	-6.94
1	FLT01-3PH	0.973	Lagging	-7.11	0.980	Lagging	-6.15	0.983	Lagging	-5.54	0.976	Lagging	-6.74	0.974	Lagging	-6.97
2	FLT02-3PH	0.973	Lagging	-7.12	0.980	Lagging	-6.16	0.983	Lagging	-5.56	0.976	Lagging	-6.75	0.974	Lagging	-6.97
3	FLT03-3PH	0.974	Lagging	-7.01	0.980	Lagging	-6.05	0.984	Lagging	-5.44	0.976	Lagging	-6.70	0.975	Lagging	-6.88
4	FLT04-3PH	0.973	Lagging	-7.07	0.980	Lagging	-6.11	0.983	Lagging	-5.53	0.976	Lagging	-6.73	0.974	Lagging	-6.97
5	FLT05-3PH	0.963	Lagging	-8.43	0.969	Lagging	-7.70	0.977	Lagging	-6.51	0.961	Lagging	-8.59	0.960	Lagging	-8.75
6	FLT06-3PH	0.970	Lagging	-7.53	0.974	Lagging	-6.98	0.973	Lagging	-7.06	0.971	Lagging	-7.44	0.973	Lagging	-7.10
7	FLT07-3PH	0.973	Lagging	-7.07	0.980	Lagging	-6.11	0.983	Lagging	-5.53	0.976	Lagging	-6.73	0.974	Lagging	-6.97
8	FLT08-3PH	0.973	Lagging	-7.06	0.980	Lagging	-6.07	0.983	Lagging	-5.55	0.975	Lagging	-6.83	0.972	Lagging	-7.23
9	FLT09-3PH	0.974	Lagging	-7.01	0.980	Lagging	-6.09	0.984	Lagging	-5.51	0.976	Lagging	-6.70	0.974	Lagging	-6.96
10	FLT10-3PH	0.973	Lagging	-7.10	0.980	Lagging	-6.14	0.983	Lagging	-5.53	0.976	Lagging	-6.70	0.974	Lagging	-6.93
11	FLT11-3PH	0.973	Lagging	-7.07	0.980	Lagging	-6.12	0.983	Lagging	-5.53	0.976	Lagging	-6.71	0.974	Lagging	-6.97
12	FLT12-3PH	0.973	Lagging	-7.08	0.980	Lagging	-6.12	0.984	Lagging	-5.51	0.976	Lagging	-6.71	0.974	Lagging	-6.94
13	FLT13-3PH	0.973	Lagging	-7.07	0.980	Lagging	-6.11	0.984	Lagging	-5.51	0.976	Lagging	-6.70	0.974	Lagging	-6.93
14	FLT14-3PH	0.973	Lagging	-7.16	0.980	Lagging	-6.16	0.984	Lagging	-5.51	0.976	Lagging	-6.72	0.974	Lagging	-6.98
15	FLT15-3PH	0.974	Lagging	-7.00	0.980	Lagging	-6.08	0.984	Lagging	-5.51	0.976	Lagging	-6.72	0.974	Lagging	-6.95
16	FLT16-3PH	0.973	Lagging	-7.06	0.980	Lagging	-6.11	0.984	Lagging	-5.51	0.976	Lagging	-6.70	0.974	Lagging	-6.94
17	FLT22-3PH	0.973	Lagging	-7.06	0.980	Lagging	-6.10	0.984	Lagging	-5.52	0.976	Lagging	-6.71	0.974	Lagging	-6.94
18	FLT23-3PH	0.973	Lagging	-7.06	0.980	Lagging	-6.10	0.984	Lagging	-5.52	0.976	Lagging	-6.71	0.974	Lagging	-6.94
19	FLT24-3PH	0.973	Lagging	-7.07	0.980	Lagging	-6.11	0.984	Lagging	-5.51	0.976	Lagging	-6.70	0.974	Lagging	-6.93
20	FLT25-3PH	0.973	Lagging	-7.06	0.980	Lagging	-6.11	0.984	Lagging	-5.51	0.976	Lagging	-6.71	0.974	Lagging	-6.94
21	FLT28-3PH	0.973	Lagging	-7.05	0.980	Lagging	-6.11	0.984	Lagging	-5.51	0.976	Lagging	-6.71	0.974	Lagging	-6.94
22	FLT29-3PH	N/A	N/A	N/A	0.980	Lagging	-6.10	N/A	N/A	N/A	N/A	N/A	N/A	0.974	Lagging	-6.94
23	FLT30-3PH	N/A	N/A	N/A	0.980	Lagging	-6.09	N/A	N/A	N/A	N/A	N/A	N/A	0.974	Lagging	-6.94
24	FLT31-3PH	N/A	N/A	N/A	0.980	Lagging	-6.11	N/A	N/A	N/A	N/A	N/A	N/A	0.974	Lagging	-6.95
25	FLT33-3PH	0.974	Lagging	-7.04	0.980	Lagging	-6.09	0.984	Lagging	-5.51	0.976	Lagging	-6.71	0.974	Lagging	-6.94
26	FLT34-3PH	0.973	Lagging	-7.06	0.980	Lagging	-6.10	0.984	Lagging	-5.51	0.976	Lagging	-6.71	0.974	Lagging	-6.94
27	FLT35-3PH	0.973	Lagging	-7.06	0.980	Lagging	-6.11	0.984	Lagging	-5.51	0.976	Lagging	-6.71	0.974	Lagging	-6.94
28	FLT38-3PH	0.973	Lagging	-7.06	0.980	Lagging	-6.10	0.984	Lagging	-5.51	0.976	Lagging	-6.71	0.974	Lagging	-6.94
29	FLT42-3PH	0.973	Lagging	-7.06	0.980	Lagging	-6.10	0.984	Lagging	-5.51	0.976	Lagging	-6.71	0.974	Lagging	-6.94
30	FLT45-3PH	0.973	Lagging	-7.05	0.980	Lagging	-6.10	0.984	Lagging	-5.51	0.976	Lagging	-6.71	0.974	Lagging	-6.95
31	FLT46-3PH	0.973	Lagging	-7.07	0.980	Lagging	-6.11	0.984	Lagging	-5.51	0.976	Lagging	-6.70	0.974	Lagging	-6.94
32	FLT47-3PH	0.973	Lagging	-7.06	0.980	Lagging	-6.11	0.984	Lagging	-5.51	0.976	Lagging	-6.71	0.974	Lagging	-6.94
33	FLT48-3PH	0.973	Lagging	-7.07	0.980	Lagging	-6.07	0.983	Lagging	-5.55	0.975	Lagging	-6.83	0.972	Lagging	-7.23
34	FLT49-3PH	0.966	Lagging	-8.00	0.974	Lagging	-6.92	0.982	Lagging	-5.69	0.976	Lagging	-6.73	0.975	Lagging	-6.88
35	FLT50-3PH	0.974	Lagging	-7.03	0.980	Lagging	-6.09	0.983	Lagging	-5.66	0.975	Lagging	-6.84	0.972	Lagging	-7.23
36	FLT51-3PH	0.973	Lagging	-7.14	0.980	Lagging	-6.12	0.984	Lagging	-5.51	0.976	Lagging	-6.71	0.974	Lagging	-6.94
38	FLT53-3PH	0.973	Lagging	-7.07	0.980	Lagging	-6.08	0.983	Lagging	-5.52	0.976	Lagging	-6.74	0.974	Lagging	-7.00
40	FLT55-3PH	0.973	Lagging	-7.18	0.980	Lagging	-6.14	0.983	Lagging	-5.52	0.976	Lagging	-6.71	0.974	Lagging	-6.93
41	FLT56-3PH	0.973	Lagging	-7.06	0.980	Lagging	-6.10	0.984	Lagging	-5.51	0.976	Lagging	-6.71	0.974	Lagging	-6.94
42	FLT57-3PH	0.973	Lagging	-7.06	0.980	Lagging	-6.10	0.984	Lagging	-5.51	0.976	Lagging	-6.71	0.974	Lagging	-6.94
43	FLT58-3PH	0.973	Lagging	-7.16	0.979	Lagging	-6.22	0.984	Lagging	-5.52	0.976	Lagging	-6.70	0.974	Lagging	-6.94
44	FLT59-3PH	0.973	Lagging	-7.06	0.980	Lagging	-6.11	0.984	Lagging	-5.51	0.976	Lagging	-6.71	0.974	Lagging	-6.94
47	FLT62-3PH	0.973	Lagging	-7.06	0.980	Lagging	-6.11	0.984	Lagging	-5.51	0.976	Lagging	-6.71	0.974	Lagging	-6.94
49	FLT64-3PH	0.973	Lagging	-7.09	0.980	Lagging	-6.13	0.983	Lagging	-5.54	0.976	Lagging	-6.71	0.974	Lagging	-6.96
51	FLT67-3PH	0.973	Lagging	-7.08	0.980	Lagging	-6.13	0.982	Lagging	-5.72	0.976	Lagging	-6.75	0.973	Lagging	-7.18
55	FLT71-3PH	0.973	Lagging	-7.06	0.980	Lagging	-6.11	0.984	Lagging	-5.51	0.976	Lagging	-6.71	0.974	Lagging	-6.94
56	FLT72-3PH	0.973	Lagging	-7.06	0.980	Lagging	-6.11	0.984	Lagging	-5.51	0.976	Lagging	-6.71	0.974	Lagging	-6.94
57	FLT73-3PH	0.973	Lagging	-7.06	0.980	Lagging	-6.12	0.984	Lagging	-5.52	0.976	Lagging	-6.71	0.974	Lagging	-6.94
58	FLT74-3PH	0.973	Lagging	-7.06	0.980	Lagging	-6.11	0.984	Lagging	-5.51	0.976	Lagging	-6.71	0.974	Lagging	-6.94
59	FLT75-3PH	0.973	Lagging	-7.06	0.980	Lagging	-6.10	0.984	Lagging	-5.51	0.976	Lagging	-6.71	0.974	Lagging	-6.94
60	FLT76-3PH	0.973	Lagging	-7.06	0.980	Lagging	-6.10	0.984	Lagging	-5.51	0.976	Lagging	-6.71	0.974	Lagging	-6.94
61	FLT77-3PH	0.973	Lagging	-7.07	0.980	Lagging	-6.11	0.984	Lagging	-5.51	0.976	Lagging	-6.71	0.974	Lagging	-6.94
62	FLT78-3PH	0.973	Lagging	-7.06	0.980	Lagging	-6.10	0.984	Lagging	-5.51	0.976	Lagging	-6.71	0.974	Lagging	-6.94
63	FLT79-3PH	0.973	Lagging	-7.06	0.980	Lagging	-6.10	0.984	Lagging	-5.51	0.976	Lagging	-6.71	0.974	Lagging	-6.94
64	FLT80-3PH	0.973	Lagging	-7.07	0.980	Lagging	-6.11	0.984	Lagging	-5.51	0.976	Lagging	-6.71	0.974	Lagging	-6.94
65	FLT81-3PH	0.973	Lagging	-7.06	0.980	Lagging	-6.10	0.984	Lagging	-5.51	0.976	Lagging	-6.71	0.974	Lagging	-6.94
66	FLT82-3PH	0.973	Lagging	-7.06	0.980	Lagging	-6.11	0.984	Lagging	-5.51	0.976	Lagging	-6.71	0.974	Lagging	-6.94
67	FLT88-3PH	0.973	Lagging	-7.07	0.980	Lagging	-6.11	0.984	Lagging	-5.51	0.976	Lagging	-6.71	0.974	Lagging	-6.95
68	FLT90-3PH	0.973	Lagging	-7.10	0.980	Lagging	-6.12	0.983	Lagging	-5.54	0.976	Lagging	-6.74	0.974	Lagging	-7.00
69	FLT91-3PH	0.973	Lagging	-7.08	0.980	Lagging	-6.11	0.984	Lagging	-5.51	0.976	Lagging	-6.71	0.974	Lagging	-6.94
70	FLT93-3PH	0.973	Lagging	-7.06	0.980	Lagging	-6.11	0.984	Lagging	-5.51	0.976	Lagging	-6.71	0.974	Lagging	-6.94
71	FLT94-3PH	0.973	Lagging	-7.06	0.980	Lagging	-6.10	0.984	Lagging	-5.51	0.976	Lagging	-6.71	0.974	Lagging	-6.94
72	FLT95-3PH	0.973	Lagging	-7.06	0.980	Lagging	-6.11	0.984	Lagging	-5.51	0.976	Lagging	-6.71	0.974	Lagging	-6.94
73	FLT96-3PH	0.973	Lagging	-7.06	0.980	Lagging	-6.11	0.984	Lagging	-5.51	0.976	Lagging	-6.71	0.974	Lagging	-6.94
74	FLT97-3PH	0.973	Lagging	-7.08	0.980	Lagging	-6.12	0.983	Lagging	-5.54	0.976	Lagging	-6.72	0.974	Lagging	-6.96

Table 5-11 (Continued)
Power Factor Analysis: ASGI-2015-003

Ref No.	Case	2015 Summer Peak			2015 Winter Peak			2020 Summer Peak			2020 Winter Peak			2025 Summer Peak		
		Power Factor		Q (MVAR)	Power Factor		Q (MVAR)	Power Factor		Q (MVAR)	Power Factor		Q (MVAR)	Power Factor		Q (MVAR)
76	FLT99-3PH	0.973	Lagging	-7.06	0.980	Lagging	-6.11	0.984	Lagging	-5.51	0.976	Lagging	-6.71	0.974	Lagging	-6.94
77	FLT100-3PH	0.973	Lagging	-7.13	0.979	Lagging	-6.23	0.983	Lagging	-5.58	0.975	Lagging	-6.81	0.974	Lagging	-6.97
78	FLT101-3PH	0.974	Lagging	-6.94	0.980	Lagging	-6.05	0.984	Lagging	-5.39	0.976	Lagging	-6.63	0.976	Lagging	-6.76
79	FLT102-3PH	0.973	Lagging	-7.13	0.979	Lagging	-6.23	0.983	Lagging	-5.58	0.975	Lagging	-6.81	0.974	Lagging	-6.97
80	FLT103-3PH	0.969	Lagging	-7.59	0.974	Lagging	-6.99	0.980	Lagging	-6.05	0.969	Lagging	-7.66	0.973	Lagging	-7.07
81	FLT104-3PH	0.973	Lagging	-7.06	0.980	Lagging	-6.11	0.984	Lagging	-5.51	0.976	Lagging	-6.71	0.974	Lagging	-6.94
82	FLT105-3PH	0.964	Lagging	-8.27	0.972	Lagging	-7.24	0.976	Lagging	-6.75	0.968	Lagging	-7.79	0.964	Lagging	-8.22
83	FLT106-3PH	0.974	Lagging	-7.03	0.981	Lagging	-5.88	0.984	Lagging	-5.38	0.979	Lagging	-6.31	0.974	Lagging	-6.96
84	FLT107-3PH	0.973	Lagging	-7.08	0.979	Lagging	-6.19	0.983	Lagging	-5.54	0.975	Lagging	-6.78	0.974	Lagging	-6.92
85	FLT108-3PH	0.973	Lagging	-7.17	0.980	Lagging	-6.08	0.983	Lagging	-5.52	0.976	Lagging	-6.69	0.974	Lagging	-7.05
87	FLT116-3PH	0.973	Lagging	-7.08	0.980	Lagging	-6.12	0.983	Lagging	-5.52	0.976	Lagging	-6.71	0.974	Lagging	-6.94
88	FLT117-3PH	N/A	N/A	N/A	N/A	N/A	N/A	0.983	Lagging	-5.53	0.976	Lagging	-6.70	0.974	Lagging	-6.94
89	FLT122-3PH	0.988	Lagging	-4.65	0.995	Lagging	-3.12	0.995	Lagging	-3.16	0.992	Lagging	-3.77	0.988	Lagging	-4.62
90	FLT123-3PH	0.971	Lagging	-7.45	0.978	Lagging	-6.34	0.982	Lagging	-5.74	0.975	Lagging	-6.79	0.973	Lagging	-7.07
91	FLT125-3PH	0.973	Lagging	-7.08	0.980	Lagging	-6.07	0.983	Lagging	-5.53	0.976	Lagging	-6.71	0.974	Lagging	-6.95
92	FLT126-3PH	0.973	Lagging	-7.07	0.980	Lagging	-6.11	0.984	Lagging	-5.52	0.976	Lagging	-6.70	0.974	Lagging	-6.95
93	FLT129-3PH	N/A	N/A	N/A	N/A	N/A	N/A	0.983	Lagging	-5.63	0.976	Lagging	-6.71	0.974	Lagging	-6.97
94	FLT130-3PH	0.973	Lagging	-7.06	0.980	Lagging	-6.11	N/A	N/A	N/A	N/A	N/A	N/A	N/A	N/A	N/A
95	FLT132-3PH	0.973	Lagging	-7.08	0.980	Lagging	-6.11	0.984	Lagging	-5.51	0.976	Lagging	-6.71	0.974	Lagging	-6.94
96	FLT133-3PH	0.973	Lagging	-7.08	0.980	Lagging	-6.11	0.984	Lagging	-5.51	0.976	Lagging	-6.71	0.974	Lagging	-6.94
97	FLT134-3PH	0.973	Lagging	-7.07	0.980	Lagging	-6.11	0.984	Lagging	-5.51	0.976	Lagging	-6.71	0.974	Lagging	-6.94
98	FLT135-3PH	0.973	Lagging	-7.06	0.980	Lagging	-6.11	0.984	Lagging	-5.51	0.976	Lagging	-6.71	0.974	Lagging	-6.94
99	FLT136-3PH	0.973	Lagging	-7.06	0.980	Lagging	-6.11	0.984	Lagging	-5.51	0.976	Lagging	-6.71	0.974	Lagging	-6.94
100	FLT137-3PH	0.973	Lagging	-7.06	0.980	Lagging	-6.11	0.984	Lagging	-5.51	0.976	Lagging	-6.71	0.974	Lagging	-6.94
101	FLT138-3PH	0.973	Lagging	-7.06	0.980	Lagging	-6.11	0.984	Lagging	-5.52	0.976	Lagging	-6.71	0.974	Lagging	-6.94
102	FLT139-3PH	0.973	Lagging	-7.06	0.980	Lagging	-6.10	0.984	Lagging	-5.51	0.976	Lagging	-6.71	0.974	Lagging	-6.94
103	FLT140-3PH	0.973	Lagging	-7.08	0.980	Lagging	-6.11	0.984	Lagging	-5.51	0.976	Lagging	-6.71	0.974	Lagging	-6.94
104	FLT141-3PH	0.973	Lagging	-7.06	0.980	Lagging	-6.11	0.984	Lagging	-5.51	0.976	Lagging	-6.71	0.974	Lagging	-6.95
105	FLT142-3PH	0.973	Lagging	-7.09	0.980	Lagging	-6.12	0.984	Lagging	-5.52	0.976	Lagging	-6.71	0.974	Lagging	-6.94
106	FLT143-3PH	0.973	Lagging	-7.10	0.980	Lagging	-6.12	0.984	Lagging	-5.52	0.976	Lagging	-6.71	0.974	Lagging	-6.94
107	FLT144-3PH	0.973	Lagging	-7.06	0.980	Lagging	-6.10	0.984	Lagging	-5.51	0.976	Lagging	-6.71	0.974	Lagging	-6.94
108	FLT145-3PH	0.973	Lagging	-7.06	0.980	Lagging	-6.11	0.984	Lagging	-5.51	0.976	Lagging	-6.71	0.974	Lagging	-6.94
109	FLT146-3PH	0.973	Lagging	-7.08	0.980	Lagging	-6.11	0.984	Lagging	-5.51	0.976	Lagging	-6.71	0.974	Lagging	-6.94
110	FLT147-3PH	0.973	Lagging	-7.06	0.980	Lagging	-6.10	0.984	Lagging	-5.51	0.976	Lagging	-6.71	0.974	Lagging	-6.94
111	FLT148-3PH	0.973	Lagging	-7.06	0.980	Lagging	-6.11	0.984	Lagging	-5.51	0.976	Lagging	-6.71	0.974	Lagging	-6.94
112	FLT148-3PH	0.973	Lagging	-7.15	0.980	Lagging	-6.17	0.983	Lagging	-5.61	0.975	Lagging	-6.78	0.973	Lagging	-7.15
113	FLT150-3PH	0.972	Lagging	-7.21	0.980	Lagging	-6.11	0.983	Lagging	-5.56	0.976	Lagging	-6.71	0.973	Lagging	-7.09
114	FLT151-3PH	0.972	Lagging	-7.24	0.980	Lagging	-6.13	0.982	Lagging	-5.70	0.975	Lagging	-6.87	0.973	Lagging	-7.14
115	FLT152-3PH	0.973	Lagging	-7.08	0.980	Lagging	-6.12	0.983	Lagging	-5.54	0.976	Lagging	-6.73	0.974	Lagging	-6.98
116	FLT153-3PH	0.973	Lagging	-7.11	0.980	Lagging	-6.14	0.983	Lagging	-5.56	0.976	Lagging	-6.74	0.974	Lagging	-7.00
117	FLT154-3PH	0.973	Lagging	-7.13	0.979	Lagging	-6.23	0.983	Lagging	-5.58	0.975	Lagging	-6.81	0.974	Lagging	-6.97
118	FLT155-3PH	0.972	Lagging	-7.19	0.978	Lagging	-6.42	0.983	Lagging	-5.59	0.974	Lagging	-6.95	0.975	Lagging	-6.88
119	FLT156-3PH	0.973	Lagging	-7.09	0.981	Lagging	-6.00	0.984	Lagging	-5.43	0.976	Lagging	-6.72	0.974	Lagging	-6.96
120	FLT157-3PH	0.972	Lagging	-7.21	0.978	Lagging	-6.34	0.983	Lagging	-5.67	0.974	Lagging	-6.94	0.973	Lagging	-7.07
121	FLT158-3PH	0.972	Lagging	-7.22	0.979	Lagging	-6.29	0.983	Lagging	-5.68	0.975	Lagging	-6.88	0.973	Lagging	-7.09
122	FLT159-3PH	0.972	Lagging	-7.30	0.979	Lagging	-6.26	0.982	Lagging	-5.75	0.975	Lagging	-6.87	0.972	Lagging	-7.19
123	FLT160-3PH	0.976	Lagging	-6.67	0.981	Lagging	-5.90	0.986	Lagging	-5.01	0.977	Lagging	-6.60	0.977	Lagging	-6.53
124	FLT161-3PH	0.973	Lagging	-7.10	0.980	Lagging	-6.14	0.983	Lagging	-5.53	0.976	Lagging	-6.72	0.974	Lagging	-6.96
125	FLT162-3PH	0.975	Lagging	-6.89	0.979	Lagging	-6.28	0.985	Lagging	-5.25	0.975	Lagging	-6.84	0.977	Lagging	-6.62
126	FLT163-3PH	0.973	Lagging	-7.06	0.978	Lagging	-6.38	0.982	Lagging	-5.74	0.975	Lagging	-6.85	0.972	Lagging	-7.22
127	FLT164-3PH	0.973	Lagging	-7.06	0.978	Lagging	-6.40	0.982	Lagging	-5.79	0.975	Lagging	-6.86	0.972	Lagging	-7.27
128	FLT165-3PH	0.973	Lagging	-7.10	0.985	Lagging	-5.31	0.978	Lagging	-6.34	0.973	Lagging	7.10	0.971	Lagging	-7.41
129	FLT166-3PH	0.970	Lagging	-7.48	0.974	Lagging	-7.04	0.979	Lagging	-6.29	0.971	Lagging	-7.43	0.972	Lagging	-7.20
130	FLT167-3PH	0.973	Lagging	-7.06	0.980	Lagging	-6.11	0.984	Lagging	-5.51	0.976	Lagging	-6.71	0.974	Lagging	-6.94
131	FLT168-3PH	0.971	Lagging	-7.36	0.979	Lagging	-6.30	0.982	Lagging	-5.85	0.974	Lagging	-6.92	0.971	Lagging	-7.33
132	FLT169-3PH	0.973	Lagging	-7.06	0.980	Lagging	-6.11	0.984	Lagging	-5.51	0.976	Lagging	-6.71	0.974	Lagging	-6.94
133	FLT170-3PH	0.970	Lagging	-7.54	0.973	Lagging	-7.06	0.978	Lagging	-6.41	0.963	Lagging	-8.39	0.969	Lagging	-7.66
134	FLT171-3PH	0.973	Lagging	-7.06	0.980	Lagging	-6.11	0.984	Lagging	-5.51	0.976	Lagging	-6.71	0.974	Lagging	-6.94
135	FLT172-3PH	0.973	Lagging	-7.09	0.980	Lagging	-6.13	0.983	Lagging	-5.54	0.976	Lagging	-6.71	0.974	Lagging	-6.96
136	FLT173-3PH	0.973	Lagging	-7.06	0.980	Lagging	-6.11	0.984	Lagging	-5.51	0.976	Lagging	-6.71	0.974	Lagging	-6.94
137	FLT174-3PH	0.973	Lagging	-7.07	0.980	Lagging	-6.11	0.983	Lagging	-5.52	0.976	Lagging	-6.70	0.974	Lagging	-6.95
138	FLT175-3PH	0.973	Lagging	-7.06	0.980	Lagging	-6.11	0.984	Lagging	-5.52	0.976	Lagging	-6.71	0.974	Lagging	-6.94
139	FLT176-3PH	0.973	Lagging	-7.07	0.980	Lagging	-6.11	0.983	Lagging	-5.52	0.976	Lagging	-6.71	0.974	Lagging	-6.95
140	FLT177-3PH	0.973	Lagging	-7.06	0.980	Lagging	-6.11	0.984	Lagging	-5.51	0.976	Lagging	-6.71	0.974	Lagging	-6.94
141	FLT178-3PH	0.973	Lagging	-7.06	0.980	Lagging	-6.11	0.984	Lagging	-5.51	0.976	Lagging	-6.71	0.974	Lagging	-6.94
142	FLT179-3PH	0.973	Lagging	-7.06	0.980	Lagging	-6.10	0.984	Lagging	-5.51	0.976	Lagging	-6.71	0.974	Lagging	-6.94

Table 5-11 (Continued)
Power Factor Analysis: ASGI-2015-003

Ref No.	Case	2015 Summer Peak			2015 Winter Peak			2020 Summer Peak			2020 Winter Peak			2025 Summer Peak		
		Power Factor		Q (MVAR)	Power Factor		Q (MVAR)	Power Factor		Q (MVAR)	Power Factor		Q (MVAR)	Power Factor		Q (MVAR)
143	FLT180-3PH	0.973	Lagging	-7.07	0.980	Lagging	-6.11	0.983	Lagging	-5.52	0.976	Lagging	-6.72	0.974	Lagging	-6.94
144	FLT181-3PH	0.973	Lagging	-7.06	0.980	Lagging	-6.11	0.984	Lagging	-5.51	0.976	Lagging	-6.71	0.974	Lagging	-6.94
145	FLT182-3PH	0.973	Lagging	-7.06	0.980	Lagging	-6.10	0.984	Lagging	-5.51	0.976	Lagging	-6.71	0.974	Lagging	-6.94
146	FLT183-3PH	0.973	Lagging	-7.07	0.980	Lagging	-6.13	0.983	Lagging	-5.53	0.976	Lagging	-6.73	0.974	Lagging	-6.97
147	FLT184-3PH	0.973	Lagging	-7.06	0.980	Lagging	-6.11	0.984	Lagging	-5.52	0.976	Lagging	-6.71	0.974	Lagging	-6.94
148	FLT185-3PH	0.973	Lagging	-7.06	0.980	Lagging	-6.10	0.984	Lagging	-5.51	0.976	Lagging	-6.70	0.974	Lagging	-6.95
149	FLT186-3PH	0.973	Lagging	-7.06	0.980	Lagging	-6.11	0.984	Lagging	-5.51	0.976	Lagging	-6.71	0.974	Lagging	-6.94
150	FLT187-3PH	0.973	Lagging	-7.06	0.980	Lagging	-6.11	0.984	Lagging	-5.51	0.976	Lagging	-6.71	0.974	Lagging	-6.94
151	FLT188-3PH	0.973	Lagging	-7.06	0.980	Lagging	-6.11	0.984	Lagging	-5.51	0.976	Lagging	-6.71	0.974	Lagging	-6.94
152	FLT189-3PH	0.973	Lagging	-7.06	0.980	Lagging	-6.11	0.984	Lagging	-5.51	0.976	Lagging	-6.71	0.974	Lagging	-6.94
153	FLT190-3PH	0.973	Lagging	-7.06	0.980	Lagging	-6.11	0.984	Lagging	-5.51	0.976	Lagging	-6.71	0.974	Lagging	-6.94
154	FLT191-3PH	0.973	Lagging	-7.06	0.980	Lagging	-6.11	0.984	Lagging	-5.52	0.976	Lagging	-6.71	0.974	Lagging	-6.94
155	FLT192-3PH	0.973	Lagging	-7.09	0.980	Lagging	-6.11	0.983	Lagging	-5.55	0.976	Lagging	-6.71	0.974	Lagging	-6.98
156	FLT193-3PH	0.973	Lagging	-7.06	0.980	Lagging	-6.11	0.984	Lagging	-5.51	0.976	Lagging	-6.71	0.974	Lagging	-6.94
157	FLT194-3PH	0.973	Lagging	-7.07	0.980	Lagging	-6.11	0.983	Lagging	-5.52	0.976	Lagging	-6.71	0.974	Lagging	-6.95
158	FLT195-3PH	0.973	Lagging	-7.08	0.980	Lagging	-6.12	0.983	Lagging	-5.54	0.976	Lagging	-6.72	0.974	Lagging	-6.96
159	FLT196-3PH	0.973	Lagging	-7.06	0.980	Lagging	-6.10	0.984	Lagging	-5.52	0.976	Lagging	-6.71	0.974	Lagging	-6.95
160	FLT197-3PH	0.973	Lagging	-7.06	0.980	Lagging	-6.10	0.983	Lagging	-5.53	0.976	Lagging	-6.71	0.974	Lagging	-6.94
161	FLT198-3PH	0.973	Lagging	-7.06	0.980	Lagging	-6.10	0.984	Lagging	-5.51	0.976	Lagging	-6.71	0.974	Lagging	-6.94
162	FLT199-3PH	0.973	Lagging	-7.08	0.980	Lagging	-6.12	0.984	Leading	-5.52	0.976	Lagging	-6.70	0.974	Lagging	-6.93
163	FLT200-3PH	0.973	Lagging	-7.06	0.980	Lagging	-6.10	0.984	Lagging	-5.51	0.976	Lagging	-6.71	0.974	Lagging	-6.94
164	FLT201-3PH	0.973	Lagging	-7.07	0.980	Lagging	-6.11	0.983	Lagging	-5.52	0.976	Lagging	-6.71	0.974	Lagging	-6.95
165	FLT202-3PH	0.973	Lagging	-7.06	0.980	Lagging	-6.10	0.984	Lagging	-5.51	0.976	Lagging	-6.71	0.974	Lagging	-6.94
166	FLT203-3PH	0.973	Lagging	-7.08	0.980	Lagging	-6.11	0.984	Lagging	-5.52	0.976	Lagging	-6.70	0.974	Lagging	-6.94
167	FLT204-3PH	0.973	Lagging	-7.07	0.980	Lagging	-6.11	0.984	Lagging	-5.52	0.976	Lagging	-6.70	0.974	Lagging	-6.94
168	FLT205-3PH	0.973	Lagging	-7.06	0.980	Lagging	-6.11	0.984	Lagging	-5.51	0.976	Lagging	-6.71	0.974	Lagging	-6.94
169	FLT206-3PH	0.973	Lagging	-7.07	0.980	Lagging	-6.11	0.983	Lagging	-5.53	0.976	Lagging	-6.72	0.974	Lagging	-6.98
170	FLT207-3PH	0.973	Lagging	-7.05	0.980	Lagging	-6.10	0.984	Lagging	-5.50	0.976	Lagging	-6.70	0.974	Lagging	-6.94
171	FLT208-3PH	0.973	Lagging	-7.06	0.980	Lagging	-6.11	0.983	Lagging	-5.53	0.976	Lagging	-6.71	0.974	Lagging	-6.97
172	FLT209-3PH	0.974	Lagging	-7.04	0.980	Lagging	-6.07	0.983	Lagging	-5.53	0.976	Lagging	-6.74	0.974	Lagging	-7.00
173	FLT210-3PH	0.973	Lagging	-7.11	0.980	Lagging	-6.10	0.984	Lagging	-5.51	0.976	Lagging	-6.72	0.974	Lagging	-6.95
174	FLT211-3PH	0.973	Lagging	-7.07	0.980	Lagging	-6.11	0.984	Lagging	-5.51	0.976	Lagging	-6.71	0.974	Lagging	-6.94
175	FLT212-3PH	0.973	Lagging	-7.06	0.980	Lagging	-6.10	0.984	Lagging	-5.51	0.976	Lagging	-6.71	0.974	Lagging	-6.94
176	FLT213-3PH	0.973	Lagging	-7.06	0.980	Lagging	-6.11	0.984	Lagging	-5.51	0.976	Lagging	-6.71	0.974	Lagging	-6.94
177	FLT214-3PH	0.973	Lagging	-7.14	0.979	Lagging	-6.17	0.984	Lagging	-5.52	0.976	Lagging	-6.73	0.974	Lagging	-6.99
178	FLT215-3PH	0.973	Lagging	-7.11	0.980	Lagging	-6.15	0.983	Lagging	-5.63	0.976	Lagging	-6.72	0.974	Lagging	-6.97
179	FLT216-3PH	0.973	Lagging	-7.18	0.980	Lagging	-6.17	0.982	Lagging	-5.70	0.976	Lagging	-6.73	0.973	Lagging	-7.07
180	FLT217-3PH	0.973	Lagging	-7.06	0.980	Lagging	-6.11	0.984	Lagging	-5.52	0.976	Lagging	-6.71	0.974	Lagging	-6.94
181	FLT218-3PH	0.973	Lagging	-7.07	0.980	Lagging	-6.11	0.984	Lagging	-5.52	0.976	Lagging	-6.71	0.974	Lagging	-6.94
182	FLT219-3PH	0.973	Lagging	-7.06	0.980	Lagging	-6.11	0.984	Lagging	-5.51	0.976	Lagging	-6.71	0.974	Lagging	-6.94
183	FLT220-3PH	0.967	Lagging	-7.93	0.970	Lagging	-7.55	0.976	Lagging	-6.64	0.962	Lagging	-8.51	0.968	Lagging	-7.76
184	FLT221-3PH	N/A	N/A	N/A	0.980	Lagging	-6.15	N/A	N/A	N/A	0.976	Lagging	-6.72	0.974	Lagging	-6.97
186	FLT223-3PH	0.973	Lagging	-7.07	0.980	Lagging	-6.11	N/A	N/A	N/A	0.976	Lagging	-6.71	N/A	N/A	N/A
187	FLT224-3PH	0.973	Lagging	-7.07	0.980	Lagging	-6.11	N/A	N/A	N/A	0.976	Lagging	-6.71	N/A	N/A	N/A
188	FLT225-3PH	0.973	Lagging	-7.06	0.980	Lagging	-6.11	N/A	N/A	N/A	0.976	Lagging	-6.71	N/A	N/A	N/A

Study Generator ASGI-2015-003

The Power Factor Analysis shows that ASGI-2015-003 has a power factor range of 0.963 to 0.988 lagging (supplying) for the 2015 Summer Peak conditions, a power factor range of 0.969 to 0.995 lagging (supplying) for the 2015 Winter Peak conditions, a power factor range of 0.973 to 0.995 lagging (supplying) for the 2020 Summer Peak conditions, a power factor range of 0.961 to 0.992 lagging (supplying) for the 2020 Winter Peak conditions, and a power factor range of 0.960 to 0.988 lagging (supplying) for the 2025 Summer Peak conditions.

SECTION 6: LOW WIND/NO WIND ANALYSIS

The objective of this task is to determine the impact of low wind or no wind conditions on wind farms that interconnect to a 345 kV or 230 kV bus. The 2015 Summer Peak, 2015 Winter Peak, 2020 Summer Peak, 2020 Winter Peak, and 2025 Summer Peak power flows provided by SPP were examined for this analysis.

6.1 Approach

Low wind or no wind conditions were examined for all 345 kV or 230 kV wind farms. Generators were disabled (independently), but the collector systems remained in-service. In order to maintain generation and load balance in the SPP area, the generation was scaled after disabling the respective generator. The amount of reactive power injected into the transmission network was recorded at the respective point of interconnection. This reactive power comes from the capacitance of the project's transmission lines and collector cables. A shunt reactor was added at the high side bus to bring the Mvar flow into the POI down to approximately zero.

6.2 Low Wind/No Wind Analysis Results

The reactance needed to bring the Mvar flow into the point of interconnect to zero Mvar was recorded for each season for all 345 kV or 230 kV wind farms. Refer to Table 6-1 for the Low Wind/No Wind Analysis results. The table lists the generators examined and the amount of reactive power needed for zero Mvar flow into the POI for each season.

Table 6-1
Low Wind/No Wind Analysis

Request	Size (MW)	Point of Interconnection	15SP	15WP	20SP	20WP	25SP
			Mvar(1)				
GEN-2014-074	152	Tap Tuco - OKU 345kV (560027)	-8.9	-40.15	-8.9	-8.9	-8.9
GEN-2015-009	300	Hobbs 230kV (527894)	-20.1	-20.1	-20.1	-20.1	-20.1
GEN-2015-010	250.7	Tap on Roosevelt South (524911) to Tolk East (525524) 230kV (560034)	-17.4	-17.35	-17.35	-17.35	-17.35

(1) Mvar rating of shunt reactors modeled.

SECTION 7: CONCLUSIONS

Summary of Stability Analysis

The Stability Analysis determined that there was one contingency that resulted in generation tripping offline for the 2015 Summer Peak, 2015 Winter Peak, 2020 Summer Peak, 2020 Winter Peak, and 2025 Summer Peak conditions when all generation interconnection requests were at 100% output. The following contingency required system upgrades in order to achieve system stability and recover within the SPP criteria:

- FLT215-3PH: Loss of the G14-074 Tap to Tuco 345 kV line

To mitigate generation tripping offline for FLT215-3PH, the following upgrades were implemented as discussed with SPP:

- Add an SVC at the G14-074 Tap 345 kV bus
    - 2015SP: -25 Mvar
    - 2015WP: -30 Mvar
    - 2020SP: -30 Mvar
    - 2020WP: -30 Mvar
    - 2025SP: -25 Mvar

After implementing the above upgrades, the contingency analysis was re-simulated for all contingencies. With the new upgrades, the Stability Analysis determined that there was no wind turbine tripping or system instability observed as a result of interconnecting all study projects at 100% output.

Summary of the Short Circuit Analysis

The short circuit analysis was performed on the 2025 Summer Peak power flow for all study projects. Refer to Table 7-1 for a list of maximum fault currents observed for each study project.

Table 7-1
List of Maximum Fault Currents Observed for Each Study Project

Ref. No.	Study Project	Maximum Fault Current (kA)	Fault Location	Bus Voltage (kV)
1	GEN-2014-046	29.60	CUNNINHAM 3	115
2	GEN-2014-065	9.63	NA_ENRICH 3	115
3	GEN-2014-074	35.14	LP-COOK 2	69
4	GEN-2015-009	32.93	HOBBS_INT 3	115
5	GEN-2015-010	35.14	LP-COOK 2	69
6	GEN-2015-014	29.00	PLANT_X 6	230
7	GEN-2015-018	31.18	TOLK_EAST 6	230
8	GEN-2015-020	31.18	TOLK_EAST 6	230
9	GEN-2015-022	31.18	TOLK_EAST 6	230
10	ASGI-2015-002	29.00	PLANT_X 6	230
11	ASGI-2015-003	31.18	TOLK_WEST 6	230

Summary of the Power Factor Analysis

It was observed that SVC and capacitor bank upgrades were required at the Border 345 kV substation following the loss of the G14-074 Tap to OKU 345 kV line (FLT214-3PH). The following upgrades were implemented, as discussed with SPP, due to depressed voltages near the Border 345 kV area[3]:

- Increase Border SVC to 200 Mvar
- Add a 200 Mvar capacitor bank to Border 345 kV (4 steps of 50 Mvar each)

<u>Study Generator GEN-2014-046</u>

The Power Factor Analysis shows that GEN-2014-046 has a power factor range of 0.986 to 0.998 leading (absorbing) for the 2015 Summer Peak conditions, a power factor range of 0.995 leading (absorbing) to 1.00 (unity) for the 2015 Winter Peak conditions, a power factor range of 0.981 leading (absorbing) to 1.00 (unity) for the 2020 Summer Peak conditions, a power factor range of 0.982 leading (absorbing) to 0.999 leading (absorbing) for the 2020 Winter Peak conditions, and a power factor range of 0.991 leading (absorbing) to 1.00 (unity) for the 2025 Summer Peak conditions.

[3] SPP added additional Network Upgrades to the powerflow cases prior to providing the cases to MEPPI

Study Generator GEN-2014-065

The Power Factor Analysis shows that GEN-2014-065 has a power factor range of 0.945 lagging (supplying) to 0.979 leading (absorbing) for the 2015 Summer Peak conditions, a power factor range of 0.977 lagging (supplying) to 0.981 leading (absorbing) for the 2015 Winter Peak conditions, a power factor range of 0.951 lagging (supplying) to 1.00 (unity) for the 2020 Summer Peak conditions, a power factor range of 0.970 lagging (supplying) to 0.996 leading (absorbing) for the 2020 Winter Peak conditions, and a power factor range of 0.830 to 0.989 lagging (supplying) for the 2025 Summer Peak conditions.

Study Generator GEN-2014-074

The Power Factor Analysis shows that GEN-2014-074 has a power factor range of 0.476 lagging (supplying) to 0.980 leading (absorbing) for the 2015 Summer Peak conditions, a power factor range of 0.431 lagging (supplying) to 0.982 leading (absorbing) for the 2015 Winter Peak conditions, a power factor range of 0.328 lagging (supplying) to 0.980 leading (absorbing) for the 2020 Summer Peak conditions, a power factor range of 0.470 lagging (supplying) to 0.983 leading (absorbing) for the 2020 Winter Peak conditions, and a power factor range of 0.556 lagging (supplying) to 0.968 leading (absorbing) for the 2025 Summer Peak conditions.

Study Generator GEN-2015-009

The Power Factor Analysis shows that GEN-2015-009 has a power factor range of 0.990 leading (absorbing) to 1.00 (unity) for the 2015 Summer Peak conditions, a power factor range of 0.992 leading (absorbing) to 1.00 (unity) for the 2015 Winter Peak conditions, a power factor range of 0.973 to 0.997 lagging (supplying) for the 2020 Summer Peak conditions, a power factor range of 0.987 to 0.997 lagging (supplying) for the 2020 Winter Peak conditions, and a power factor range of 0.977 lagging (supplying) to 1.00 (unity) for the 2025 Summer Peak conditions.

Study Generator GEN-2015-010

The Power Factor Analysis shows that GEN-2015-010 has a power factor range of 0.998 lagging (supplying) to 0.970 leading (absorbing) for the 2015 Summer Peak conditions, a power factor range of 0.997 lagging (supplying) to 0.959 leading (absorbing) for the 2015 Winter Peak conditions, a power factor range of 0.995 lagging (supplying) to 0.969 leading (absorbing) for the 2020 Summer Peak conditions, a power factor range of 0.991 lagging (supplying) to 0.968 leading (absorbing) for the 2020 Winter Peak conditions, and a power factor range of 0.991 lagging (supplying) to 0.981 leading (absorbing) for the 2025 Summer Peak conditions.

Study Generator GEN-2015-014

The Power Factor Analysis shows that GEN-2015-014 has a power factor range of 0.955 to 0.999 leading (absorbing) for the 2015 Summer Peak conditions, a power factor range of 0.964 to 0.998 leading (absorbing) for the 2015 Winter Peak conditions, a power factor range of 0.949 to 0.997 leading (absorbing) for the 2020 Summer Peak conditions, a power factor range of

0.968 to 0.995 leading (absorbing) for the 2020 Winter Peak conditions, and a power factor range of 0.949 to 0.999 leading (absorbing) for the 2025 Summer Peak conditions.

Study Generator GEN-2015-018

The Power Factor Analysis shows that GEN-2015-018 has a power factor range of 0.997 lagging (absorbing) to 0.946 leading (absorbing) for the 2015 Summer Peak conditions, a power factor range of 0.967 leading (absorbing) to 1.00 (unity) for the 2015 Winter Peak conditions, a power factor range of 0.996 lagging (absorbing) to 0.940 leading (absorbing) for the 2020 Summer Peak conditions, a power factor range of 0.970 leading (absorbing) to 1.00 (unity) for the 2020 Winter Peak conditions, and a power factor range of 0.991 lagging (absorbing) to 0.941 leading (absorbing) for the 2025 Summer Peak conditions.

Study Generator GEN-2015-020

The Power Factor Analysis shows that GEN-2015-020 has a power factor range of 0.998 lagging (supplying) to 0.947 leading (absorbing) for the 2015 Summer Peak conditions, a power factor range of 0.951 lagging (supplying) to 0.932 leading (absorbing) for the 2015 Winter Peak conditions, a power factor range of 0.995 lagging (supplying) to 0.939 leading (absorbing) for the 2020 Summer Peak conditions, a power factor range of 0.981 lagging (supplying) to 0.921 leading (absorbing) for the 2020 Winter Peak conditions, and a power factor range of 0.989 lagging (supplying) to 0.942 leading (absorbing) for the 2025 Summer Peak conditions.

Study Generator GEN-2015-022

The Power Factor Analysis shows that GEN-2015-022 has a power factor range of 0.970 lagging (supplying) to 0.916 leading (absorbing) for the 2015 Summer Peak conditions, a power factor range of 0.991 lagging (supplying) to 0.946 leading (absorbing) for the 2015 Winter Peak conditions, a power factor range of 0.938 lagging (supplying) to 0.891 leading (absorbing) for the 2020 Summer Peak conditions, a power factor range of 0.998 lagging (supplying) to 0.945 leading (absorbing) for the 2020 Winter Peak conditions, and a power factor range of 0.920 lagging (supplying) to 0.864 leading (absorbing) for the 2025 Summer Peak conditions.

Study Generator ASGI-2015-002

The Power Factor Analysis shows that ASGI-2015-002 has a power factor range of 0.515 lagging (supplying) to 0.614 leading (absorbing) for the 2015 Summer Peak conditions, a power factor range of 0.591 lagging (supplying) to 0.661 leading (absorbing) for the 2015 Winter Peak conditions, a power factor range of 0.601 lagging (supplying) to 0.688 leading (absorbing) for the 2020 Summer Peak conditions, a power factor range of 0.742 lagging (supplying) to 0.907 leading (absorbing) for the 2020 Winter Peak conditions, and a power factor range of 0.471 lagging (supplying) to 0.550 leading (absorbing) for the 2025 Summer Peak conditions.

Study Generator ASGI-2015-003

The Power Factor Analysis shows that ASGI-2015-003 has a power factor range of 0.963 to 0.988 lagging (supplying) for the 2015 Summer Peak conditions, a power factor range of 0.969 to 0.995 lagging (supplying) for the 2015 Winter Peak conditions, a power factor range of 0.973 to 0.995 lagging (supplying) for the 2020 Summer Peak conditions, a power factor range of 0.961 to 0.992 lagging (supplying) for the 2020 Winter Peak conditions, and a power factor range of 0.960 to 0.988 lagging (supplying) for the 2025 Summer Peak conditions.

Summary of the Low Wind/No Wind Analysis

The amount of reactive power injected into the transmission network was recorded at the point of interconnection for GEN-2014-074, GEN-2015-009, and GEN-2015-010 for each season. The maximum reactance needed for zero Mvar flow was -20.1 Mvar for GEN-2015-009 (Hobbs 230 kV). The minimum reactance needed for zero Mvar flow was -8.9 Mvar for GEN-2014-074 (Tap Tuco - OKU 345 kV).

P: Group 7 Dynamic Stability Analysis Report

See B&M report next page

Definitive Interconnection System Impact Study (DISIS) 2015-001 Group 07 Report

Southwest Power Pool

DISIS-2015-001 Group 07
Project No. 85769

07/27/2015

Definitive Interconnection System Impact Study (DISIS) 2015-001 Group 07 Report

prepared for

Southwest Power Pool
DISIS-2015-001 Group 07
Little Rock, AR

Project No. 85769

07/27/2015

prepared by

Burns & McDonnell Engineering Company, Inc.
Houston, Texas

COPYRIGHT © 2015 BURNS & McDONNELL ENGINEERING COMPANY, INC.

TABLE OF CONTENTS

Page No.

EXECUTIVE SUMMARY ES-1
ES.1 Short Circuit Analysis ES-1
ES.2 Power Factor Analysis ES-2
ES.3 Reactive Power Analysis ES-2
ES.4 Stability Analysis ES-2

1.0 INTRODUCTION 1-1
1.1 Study Scope 1-1
1.2 Limitations 1-1

2.0 STUDY ASSUMPTIONS 2-1
2.1 Disturbance Performance Requirement 2-1
2.1.1 Rotor Angle Damping Requirement 2-1
2.1.2 Transient Voltage Recovery Requirement: 2-2
2.2 Study System 2-2
2.3 Study Models 2-2
2.4 Prior Queued Projects 2-3

3.0 SHORT CIRCUIT ANALYSIS 3-1
3.1 Methodology 3-1
3.2 Short Circuit Analysis Results 3-1

4.0 POWER FACTOR ANALYSIS 4-1
4.1 Methodology 4-1
4.2 Power Factor Analysis Results 4-1

5.0 REACTIVE POWER ANALYSIS 5-1
5.1 Methodology 5-1
5.2 Reactive Power Analysis Results 5-1

6.0 STABILITY ANALYSIS 6-1
6.1 Methodology 6-1
6.2 Fault Definitions 6-1
6.3 Cluster Scenario Results 6-7
6.4 Stand Alone Scenario Results 6-7

7.0 CONCLUSIONS 7-1
7.1 Short Circuit Analysis 7-1
7.2 Power Factor Analysis 7-1
7.3 Reactive Power Analysis 7-1
7.4 Stability Analysis 7-1

LIST OF TABLES

Page No.

Table ES-1: Group 07 Interconnection Project.....ES-1
Table 1-1: Group 07 Interconnection Project 1-1
Table 2-1: Cluster Scenario Study Models 2-2
Table 2-2: Stand Alone Scenario Study Models for Stability Analysis..... 2-3
Table 2-3: Prior Queued Projects..... 2-4
Table 3-1: GEN-2015-004 Three-Phase Fault Currents 3-1
Table 3-2: GEN-2015-013 Three-Phase Fault Currents 3-5
Table 4-1: Base Case Group 4 POI Voltages..... 4-1
Table 4-2: Power Factor Contingency Summary..... 4-1
Table 4-3: GEN-2015-004 Power Factor Requirements 4-2
Table 4-4: GEN-2015-013 Power Factor Requirements 4-3
Table 6-1: Fault Definitions..... 6-2

LIST OF FIGURES

Page No.

Figure 2-1: GEN-2015-004 Single-line Diagram 2-3
Figure 2-2: GEN-2015-013 Single-line Diagram 2-3
Figure 5-1: GEN-2015-004 Shunt Reactor Requirement 5-1

APPENDICES

APPENDIX A: STABILITY MODEL DATA
APPENDIX B: DYNAMIC STABILITY RESULTS AND PLOTS CLUSTER SCENARIOS
APPENDIX C: DYNAMIC STABILITY RESULTS AND PLOTS STAND ALONE SCENARIOS

EXECUTIVE SUMMARY

Burns & McDonnell was retained by Southwest Power Pool (SPP) to perform a Definitive Interconnection System Impact Study for the Group 07 (DISIS-2015-001) interconnection projects. This study included short circuit analysis, power factor analysis, reactive power analysis, and stability analysis to find impacts on the transmission system caused by the interconnections of the Group 07 projects.

Group 07 consists of two generator interconnection projects as shown in Table ES-1. The two projects were proposed to interconnect with the SPP control area. The combined capacity of Group 07 projects for summer and winter approximately totaled to 172.9 MW.

Table ES-1: Group 07 Interconnection Project

Request	Size (MW)	Generator Model	Point of Interconnection
GEN-2015-004	52.9 (uprate of GEN-2011-049; Total power=303.6MW)	Siemens 2.3MW	Border 345kV (515458)
GEN-2015-013	120	Eaton Power Xpert Solar Inverters 1.67MW	Snyder 138kV (521052)

Note that GEN-2015-004 interconnection request is an uprate to the existing Siemens GEN-2011-049. The interconnection request represents an addition of 52.9 MW to the existing generation capacity of 250.7 MW for a total of 303.6 MW.

Cluster Scenario study cases that represent the system with both generating units online at their requested capacities were provided by SPP. The Stand Alone Scenario study cases were developed to represent the system with the individual generators each modeled separately at their requested capacities. The 2015 summer peak, 2015 winter peak and 2025 summer peak loading conditions were included in the Cluster and Stand Alone Scenarios. Since GEN-2015-004 is an uprate of a prior queued project, the generator was dispatched in all the Stand Alone study cases at the appropriate levels. Both the analyses were performed using the PTI PSS/E software and the results are summarized below.

ES.1 Short Circuit Analysis

The short circuit analysis was performed for the 2025 Summer Peak Cluster Scenario case to determine the impact of the generation interconnection requests on the fault current levels in the study system. The results from short circuit analysis showed that the maximum change in the fault current in the immediate systems at or near GEN-2015-004 was negligible and about 2% for GEN-2015-013. All three phase current levels within the study system with the Group 07 generators online were below 43,000 A.

ES.2 Power Factor Analysis

The power factor analysis was performed for the three Cluster Scenario cases to determine if the power factor requirement for each renewable energy interconnection request is within the capabilities of the specified generators. The results from the power factor analysis showed that the power factor requirements for GEN-2015-004 and GEN-2015-013 were within the Siemens Turbine capability of +/- 0.909 and the Eaton Power Xpert Solar Inverters 1.67MW of +/- 0.91, respectively. The power factor at each interconnection for all the contingencies studied was within the required capability. The minimum power factors at the POI's for GEN-2015-004 and GEN-2015-013 were 99.0% and 96.7%, respectively. Per tariff requirements, the Generating Facilities will be required to meet the standard 95% power factor requirement at the Point of Interconnection. The customer may be required to add capacitor and/or reactor banks depending upon its final collector system design.

ES.3 Reactive Power Analysis

The reactive power analysis was performed for the three Cluster Scenario cases for a wind farm that interconnects at 230 kV or 345 kV. Based on this criterion, only GEN-2015-004 required this assessment. The assessment was performed to determine the reactive power contribution from the project's interconnection line and collector transformer and cables. The goal of the analysis is to size shunt reactors at the project substation high side bus to reduce POI reactive power value to approximately zero. The results from reactive power analysis showed that the GEN-2015-004 interconnection requires approximately 21 MVar shunt reactor at the high side to reduce the POI MVar to 0.

ES.4 Stability Analysis

The stability analysis was performed for the Cluster Scenario and Stand Alone Scenario cases. The Stability Analysis evaluated the system during three load scenarios (2015 summer peak, 2015 winter peak and 2025 summer peak) simulating up to 74 faults that included three phase and single-line-to-ground faults including faults on prior outage cases and stuck breakers. The Stability Analysis results indicated that the machine rotor angle damping and transient voltage recovery criteria were met for all faults studied. The Stability Analysis results showed that the Group 07 projects met the Low-Voltage Ride Through and pre-fault voltage recovery requirements of FERC Order 661A for the fault scenarios analyzed.

1.0 INTRODUCTION

Burns & McDonnell was retained by Southwest Power Pool (SPP) to perform a Definitive Interconnection System Impact Study for the Group 07 (DISIS-2015-001) interconnection projects. This study included short circuit analysis, power factor analysis, reactive power analysis, and stability analysis to find impacts on the transmission system caused by the interconnections of the Group 07 projects. The interconnection requests in this study are wind and solar projects.

Group 07 consists of two generator interconnection projects as shown in Table 1-1. Both projects were proposed to interconnect with the SPP control area. The combined capacity of Group 07 projects for summer and winter totaled approximately 172.9 MW.

Table 1-1: Group 07 Interconnection Project

Request	Size (MW)	Generator Model	Point of Interconnection
GEN-2015-004	52.9 (uprate of GEN-2011-049; Total power=303.6MW)	Siemens 2.3MW	Border 345kV (515458)
GEN-2015-013	120	Eaton Power Xpert Solar Inverters 1.67MW	Snyder 138kV (521052)

Note that GEN-2015-004 interconnection request is an uprate to the existing Siemens GEN-2011-049. The interconnection request represents an addition of 52.9 MW to the existing generation capacity of 250.7 MW for a total of 303.6 MW.

1.1 Study Scope

This study is presented in the following seven main parts:

1. Introduction
2. Study Assumptions
3. Short Circuit Analysis
4. Power Factor Analysis
5. Reactive Power Analysis
6. Stability Analysis
7. Conclusions

1.2 Limitations

In the preparation of this report, the information provided to Burns & McDonnell by others was used by Burns & McDonnell to make certain assumptions with respect to conditions which may exist in the

future. While Burns & McDonnell believes the assumptions made are reasonable for the purposes of this report, Burns & McDonnell makes no representation that the conditions assumed will, in fact, occur. In addition, while Burns & McDonnell has no reason to believe that the information provided by others, and on which this report is based, is inaccurate in any material respect, Burns & McDonnell has not independently verified such information and cannot guarantee its accuracy or completeness. To the extent that actual future conditions differ from those assumed herein or from the information provided to Burns & McDonnell, the actual results will vary from those presented.

* * * * *

2.0 STUDY ASSUMPTIONS

The short circuit, power factor, reactive power, and stability analyses were performed using the PTI PSS/E software version 32.

2.1 Disturbance Performance Requirement

The following SPP Disturbance Performance Requirements were applied to the Bulk Electric System for the stability analysis. These requirements establish the minimum requirements for machine rotor angle damping and transient voltage recovery.

2.1.1 Rotor Angle Damping Requirement

The machine rotor angles shall exhibit well damped angular oscillations and acceptable power swings following a disturbance on the Bulk Electric System for all NERC events. Well damped angular oscillation is defined as:

1. The Successive Positive Peak Ratio (SPPR) must be less than or equal to 0.95 where SPPR is calculated as:

$$\text{SPPR} = \frac{\text{Peak Rotor Angle of 2nd Positive Swing Peak}}{\text{Peak Rotor Angle of 1st Positive Swing Peak}} \leq 0.95$$

Or, Damping Factor % = (1 – SPPR) x 100% ≥ 5%

The machine rotor angle damping ratio may be determined by appropriate modal analysis (i.e. Prony Analysis) where the following equivalent requirement must be met:

Damping Ratio ≥ 0.0081633

2. Successive Positive Peak Ratio Five (SPPR5) must be less than or equal to 0.774 where SPPR5 is calculated as follows:

$$\text{SPPR5} = \frac{\text{Peak Rotor Angle of 5th Positive Swing Peak}}{\text{Peak Rotor Angle of 1st Positive Swing Peak}} \leq 0.774$$

Or, Damping Factor % = (1 – SPPR5) x 100% ≥ 22.6%

The machine rotor angle damping ratio may be determined by appropriate modal analysis (i.e. Prony Analysis) where the following equivalent requirement must be met:

Damping Ratio ≥ 0.0081633.

Burns & McDonnell only calculated these damping values where oscillations were not well damped by the end of the simulation through visual inspection.

2.1.2 Transient Voltage Recovery Requirement:

Any time after a disturbance is cleared; bus voltages on the Bulk Electric System shall not swing outside of the bandwidth of 0.70 per unit to 1.20 per unit. All post-transient voltages must fall between the 0.90 pu and 1.1 pu range at the end of the simulations.

2.2 Study System

The study system consisted of facilities at or above 69kV within the SPP transmission region. Machines in areas 520 (AEPW), 524 (OKGE), 525 (WFEC), 526 (SPS), 531 (MIDW), 534 (SUNC) and 536 (WERE) were monitored for the study.

2.3 Study Models

The short circuit, power factor, reactive power and stability analyses were performed using models developed from the 2015 Southwest Power Pool (SPP) Model Development Working Group (MDWG) PSS/E models. A set of three Cluster Scenario base cases and three Stand Alone base cases were provided by SPP. The base cases model the 2015 Summer Peak, 2015 Winter Peak and 2025 Summer Peak study conditions. The Cluster Scenario models were built with the SPP footprint displaced by the new generation interconnection requests listed in Table 1-1. The Stand Alone scenarios were developed with a single interconnection request added to the base case with dispatch adjustments made per SPP's supplied dispatch requirements. As GEN-2015-004 is an uprate of a prior queued project, GEN-2015-004 was dispatched in all of the Stand Alone cases to 250.7 and 303.6 MW in the GEN-2015-013 and GEN-2015-004 Stand Alone cases respectively. Table 2-1 and Table 2-2 summarize the study models used for each of the analyses.

Table 2-1: Cluster Scenario Study Models

Model	Short Circuit	Power Factor	Reactive Power Analysis	Stability Cluster Scenario
MDWG14-15SP_DIS1501_G07.SAV				X
MDWG14-15WP_DIS1501_G07.SAV				X
MDWG14-25SP_DIS1501_G07.SAV	X			X
MDWG14-15SP_DIS1501_G07_PF.SAV		X		
MDWG14-15WP_DIS1501_G07_PF.SAV		X		
MDWG14-25SP_DIS1501_G07_PF.SAV		X		
MDWG14-15SP_DIS1501_G07_Add_Reactor.SAV			X	
MDWG14-15WP_DIS1501_G07_Add_Reactor.SAV			X	
MDWG14-25SP_DIS1501_G07_Add_Reactor.SAV			X	

Table 2-2: Stand Alone Scenario Study Models for Stability Analysis

Model	GEN-2015-004	GEN-2015-013
MDWG14-15SP_DIS1501_G07_GEN-004-SA.sav	X	
MDWG14-15WP_DIS1501_G07_GEN-004-SA.sav	X	
MDWG14-25SP_DIS1501_G07_GEN-004-SA.sav	X	
MDWG14-15SP_DIS1501_G07_GEN-013-SA.sav		X
MDWG14-15WP_DIS1501_G07_GEN-013-SA.sav		X
MDWG14-25SP_DIS1501_G07_GEN-013-SA.sav		X

Single-line diagrams for each of the Group 07 projects for summer peak conditions are provided in Figure 2-1 and Figure 2-2.

Figure 2-1: GEN-2015-004 Single-line Diagram

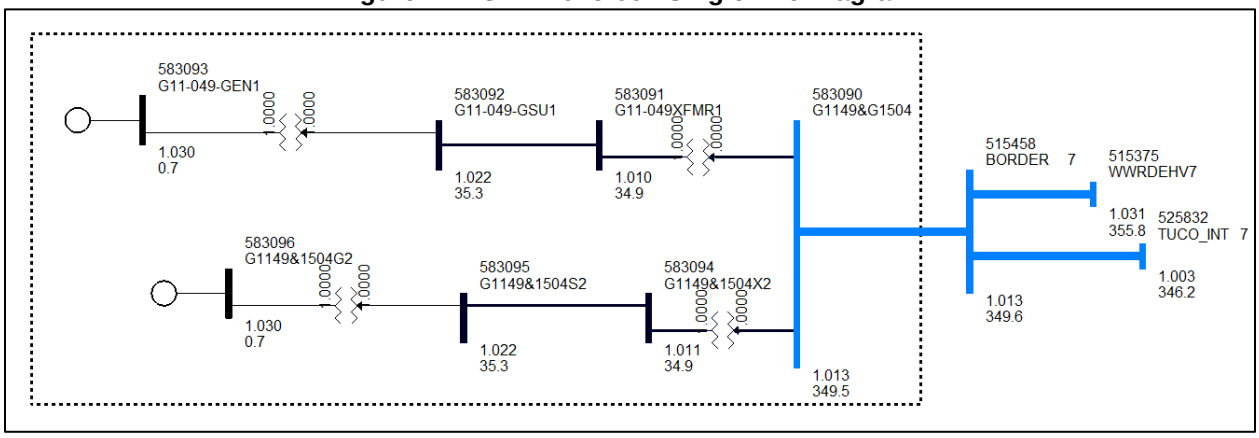

Figure 2-2: GEN-2015-013 Single-line Diagram

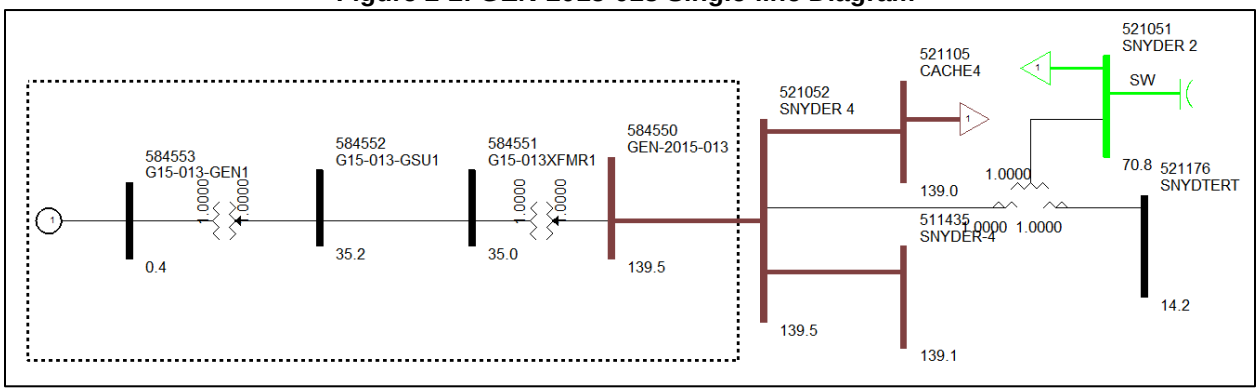

2.4 Prior Queued Projects

All study cases contained the Prior Queued Projects listed in Table 2-3 below:

Table 2-3: Prior Queued Projects

Request	Size (MW)	Generator Model	Point of Interconnection
Blue Canyon I	74.3	WT1G1	Washita 138kV (521089)
Blue Canyon II (GEN-2003-004)	151.2	Vestas V80	Washita 138kV (521089)
GEN-2002-005	120	Acciona 1.5MW	Moorewood – Elk City 138kV (521116)
GEN-2003-005/ GEN-2011-037	105.6	G.E. 1.6MW	Tap on the Anadarko – Paradise 138kV line (521129)
GEN-2003-022/ GEN-2004-020	150	GE 1.5MW	Weatherford 138kV (511506)
GEN-2006-002	100.8	G.E. 1.5 & 1.6MW	Sweetwater 230kV (511541)
GEN-2006-035	224	Gamesa 2.0MW	Sweetwater 230kV (511541)
GEN-2006-043	98.9	Siemens 2.3MW	Sweetwater 230kV (511541)
GEN-2007-032	150	Acciona 1.5MW	Tap on the Clinton Jct. – Clinton 138kV line (560652)
GEN-2007-052	150	Gas Turbine	Anadarko 138kV (520814)
GEN-2008-023	148.8	G.E. 1.6MW	Hobart Junction 138kV (511463)
GEN-2011-049	250.7	Siemens 2.3MW	Border 345kV (515458)
GEN-2012-028	74.25	GE 1.7MW	Gotebo 69kV (520925)

* * * * *

3.0 SHORT CIRCUIT ANALYSIS

The short circuit analysis was performed to determine the impact of the generation interconnection requests on the fault current levels in the study system. The analysis was performed using version 32 of the PTI PSS/E software. The following sections outline the results of the analysis.

3.1 Methodology

The short circuit analysis was performed using the 2025 Summer Peak Cluster Scenario model. Three phase fault currents were calculated for 69 kV and above buses within 5 buses of each generator's point of interconnection. The fault current levels were then compared to the fault currents without the generator to determine the impact of the generation interconnection.

3.2 Short Circuit Analysis Results

Table 3-1 through Table 3-2 summarizes the three phase fault current observed for facilities near GEN-2015-004 and GEN-2015-013 respectively.

Table 3-1: GEN-2015-004 Three-Phase Fault Currents

Bus Dist. From POI	BUS NUMBER	BUS NAME	Voltage (kV)	AREA	ZONE	3 Phase Fault Current (A)		Difference (ON - OFF)	
						GenON	GenOFF	Change	%
0	515458	BORDER	345	524	566	5155	5167	-12	0%
1	515375	WWRDEHV7	345	524	566	20694	20701	-7	0%
1	525832	TUCO_INT	345	526	1505	12189	12194	-5	0%
1	583090	G1149&G1	345	524	566	4706	4717	-11	0%
2	560027	G14-074-	345	526	1505	6580	6580	0	0%
2	560000	G11-14-T	345	524	566	14759	14760	-1	0%
2	539801	THISTLE7	345	534	1529	16253	16256	-3	0%
2	525830	TUCO_INT	230	526	1505	22624	22628	-4	0%
2	515376	WWRDEHV4	138	524	566	26187	26192	-5	0%
2	526936	YOAKUM_3	345	526	1506	9446	9448	-2	0%
2	562075	G11-051-	345	524	566	16996	16999	-3	0%
2	579351	GEN-2007	345	524	566	8815	8817	-2	0%
2	582019	GEN-2011	345	524	566	20694	20701	-7	0%
2	582020	GEN-2011	345	524	566	20694	20701	-7	0%
3	511456	O.K.U.-7	345	520	549	5192	5187	5	0%
3	525213	SWISHER	230	526	1505	10244	10244	0	0%
3	584440	GEN-2014	345	525	1505	6205	6205	0	0%
3	525524	TOLK_EAS	230	526	1505	29857	29857	0	0%
3	515554	BVRCNTY7	345	524	566	16355	16356	-1	0%
3	514796	IODINE-4	138	524	566	7281	7281	0	0%
3	539800	CLARKCOU	345	534	1529	12775	12776	-1	0%
3	526935	YOAKUM	230	526	1506	18186	18187	-1	0%
3	560033	G1524&G1	345	536	1537	19939	19940	-1	0%
3	526337	JONES	230	526	1505	21459	21461	-2	0%
3	581112	GEN-2011	345	524	566	10868	10868	0	0%
3	525828	TUCO_INT	115	526	1505	20159	20161	-2	0%

Table 3-1: GEN-2015-004 Three-Phase Fault Currents (Continued)

Bus Dist. From POI	BUS NUMBER	BUS NAME	Voltage (kV)	AREA	ZONE	3 Phase Fault Current (A)		Difference (ON - OFF)	
						GenON	GenOFF	Change	%
3	515407	TATONGA7	345	524	566	16626	16628	-2	0%
3	514785	WOODWRD4	138	524	566	21273	21276	-3	0%
3	526161	CARLISLE	230	526	1505	13901	13903	-2	0%
3	527896	HOBBS_IN	345	526	1508	10261	10262	-1	0%
3	583340	GEN-2012	230	526	1505	9249	9250	-1	0%
3	539804	THISTLE4	138	534	1529	16881	16883	-2	0%
3	583990	GEN-2014	345	534	1529	8052	8053	-1	0%
3	515394	KEENAN 4	138	524	566	9291	9292	-1	0%
3	525840	ANTELOPE	230	526	1505	22450	22454	-4	0%
3	515398	OUSPRT 4	138	524	566	9867	9868	-1	0%
3	583110	GEN-2011	345	524	566	16996	16999	-3	0%
3	579358	G07-062-	345	524	566	6738	6740	-2	0%
4	511468	L.E.S.-7	345	520	549	12164	12147	17	0%
4	524415	AMA_SOUT	230	526	1503	13622	13619	3	0%
4	515497	MATHWSN7	345	524	569	28985	28981	4	0%
4	514787	DEWEY 4	138	524	566	6722	6722	0	0%
4	515785	WINDFRM4	138	524	566	19137	19136	1	0%
4	525461	NEWHART	230	526	1505	10999	10998	1	0%
4	525212	SWISHER	115	526	1505	9969	9969	0	0%
4	525481	PLANT_X	230	526	1505	28698	28698	0	0%
4	562480	G13-027-	230	526	1505	9988	9988	0	0%
4	525543	TOLK_TAP	230	526	1505	29857	29857	0	0%
4	560010	G14-037-	345	526	1502	17014	17014	0	0%
4	524911	ROSEVELT	230	526	1504	9505	9505	0	0%
4	525454	HALE_CNT	115	526	1505	10321	10321	0	0%
4	539803	IRONWOOD	345	534	1529	14164	14164	0	0%
4	531469	SPERVIL7	345	534	1529	14651	14652	-1	0%
4	584500	GEN-2015	345	524	566	11382	11382	0	0%
4	573501	GEN-2008	345	524	566	13686	13687	-1	0%
4	578542	GEN-2010	345	524	566	13383	13383	0	0%
4	583760	GEN-2013	345	524	566	12432	12432	0	0%
4	532796	WICHITA7	345	536	1537	25183	25185	-2	0%
4	583370	GEN-2012	345	534	1529	10161	10161	0	0%
4	527149	MUSTANG	230	526	1506	15996	15996	0	0%
4	527894	HOBBS_IN	230	526	1508	20746	20747	-1	0%
4	526934	YOAKUM	115	526	1506	16120	16121	-1	0%
4	514782	WODWRD 2	69	524	566	12198	12198	0	0%
4	584660	G1524&G1	345	536	1537	5210	5210	0	0%
4	582008	GEN-2011	345	534	1529	10278	10278	0	0%
4	526460	AMOCO_SS	230	526	1505	9774	9774	0	0%
4	527010	OXYBRU_T	230	526	1506	14225	14226	-1	0%
4	526677	GRASSLAN	230	526	1505	6550	6550	0	0%
4	522870	LP-HOLLY	230	526	1500	17157	17159	-2	0%
4	526269	LUBBCK_S	230	526	1505	19366	19368	-2	0%
4	526299	LUBBCK_E	230	526	1505	13665	13666	-1	0%
4	525780	FLOYD_CN	115	526	1505	6663	6663	0	0%
4	526298	LUBBCK_E	115	526	1505	15084	15085	-1	0%
4	526525	WOLFFORT	230	526	1505	13862	13863	-1	0%
4	527965	KIOWA	345	526	1507	6387	6388	-1	0%
4	528611	GAINESGE	345	526	1508	7308	7309	-1	0%

Table 3-1: GEN-2015-004 Three-Phase Fault Currents (Continued)

Bus Dist. From POI	BUS NUMBER	BUS NAME	Voltage (kV)	AREA	ZONE	3 Phase Fault Current (A)		Difference (ON - OFF)	
						GenON	GenOFF	Change	%
4	526076	STANTON_	115	526	1505	9315	9316	-1	0%
4	579268	G07-44&1	345	524	566	9315	9316	-1	0%
4	515448	CRSRDSW7	345	524	566	11786	11787	-1	0%
4	526160	CARLISLE	115	526	1505	13268	13269	-1	0%
4	579253	G07-21&1	345	524	566	13801	13803	-2	0%
4	584700	GEN-2015	345	524	566	9970	9971	-1	0%
4	525816	TUCO_INT	69	526	1505	4497	4498	-1	0%
4	525826	TUCO_INT	69	526	1505	7829	7830	-1	0%
4	522823	LP-MILWA	230	526	1500	13445	13447	-2	0%
4	584030	G14053&1	230	526	1505	8311	8312	-1	0%
4	515363	CENT 4	138	524	566	4060	4061	-1	0%
4	539638	FLATRDG3	138	534	1541	15160	15162	-2	0%
5	511467	L.E.S.-4	138	520	549	23993	23943	50	0%
5	515800	GRACMNT7	345	524	567	14696	14680	16	0%
5	560013	G14-057T	345	520	549	9212	9203	9	0%
5	524044	NICHOLS	230	526	1503	26192	26185	7	0%
5	524365	RANDALL	230	526	1503	14541	14538	3	0%
5	514901	CIMARON7	345	524	569	30509	30503	6	0%
5	524414	AMA_SOUT	115	526	1503	16732	16728	4	0%
5	514822	SOUTHRD4	138	524	569	3946	3946	0	0%
5	523959	POTTER_C	230	526	1503	21105	21102	3	0%
5	515390	TLGAWND4	138	524	566	3042	3041	1	0%
5	514880	NORTWST7	345	524	569	29868	29864	4	0%
5	521065	TALOGA 4	138	525	587	6731	6730	1	0%
5	560016	G14-068-	230	526	1504	9711	9710	1	0%
5	515786	FPLWIND4	138	524	566	6305	6304	1	0%
5	520999	MOORLND4	138	525	587	19460	19458	2	0%
5	514715	WOODRNG7	345	524	566	16909	16908	1	0%
5	525460	NEWHART	115	526	1505	14593	14592	1	0%
5	584640	GEN-2015	115	526	1505	9969	9969	0	0%
5	525192	KRESS_IN	115	526	1505	11032	11031	1	0%
5	525414	LAMTON	115	526	1505	7969	7969	0	0%
5	523097	HITCHLAN	345	526	1502	17286	17286	0	0%
5	525480	PLANT_X	115	526	1505	26198	26198	0	0%
5	525531	TOLK_WES	230	526	1505	29857	29857	0	0%
5	525549	TOLK	345	526	1505	7180	7180	0	0%
5	584210	GEN-2014	345	526	1502	11967	11967	0	0%
5	531501	BUCKNER7	345	534	1529	10949	10949	0	0%
5	521096	WOODWRD2	69	525	587	10458	10458	0	0%
5	524909	ROSEVELT	230	526	1504	9505	9505	0	0%
5	524915	SW_4K33	230	526	1504	9505	9505	0	0%
5	599955	PNM-DC6	230	999	999	9505	9505	0	0%
5	583840	GEN-2013	230	526	1505	8940	8940	0	0%
5	525453	HALE_CNT	69	526	1505	6549	6549	0	0%
5	533040	EVANS N4	138	536	1537	42007	42008	-1	0%
5	532791	BENTON 7	345	536	1537	19349	19350	-1	0%
5	532798	VIOLA	345	536	1537	13891	13892	-1	0%
5	539695	SPEARVL6	230	534	1541	13111	13112	-1	0%
5	539759	SPRVL 3	115	534	1541	12011	12011	0	0%
5	582016	GEN-2011	345	524	1529	7897	7897	0	0%

Table 3-1: GEN-2015-004 Three-Phase Fault Currents (Continued)

Bus Dist. From POI	BUS NUMBER	BUS NAME	Voltage (kV)	AREA	ZONE	3 Phase Fault Current (A)		Difference (ON - OFF)	
						GenON	GenOFF	Change	%
5	562476	G14-001-	345	536	1537	10689	10689	0	0%
5	539809	IRONWOOD	345	534	1529	14164	14164	0	0%
5	527891	HOBBS_IN	115	526	1508	34476	34477	-1	0%
5	579480	GEN-2008	230	534	1529	20477	20478	-1	0%
5	584530	GEN-2015	230	526	1508	6392	6392	0	0%
5	532771	RENO 7	345	536	1535	12440	12440	0	0%
5	525326	COX	115	526	1505	6015	6015	0	0%
5	562701	GEN-2006	345	534	1529	14651	14652	-1	0%
5	573507	G08-047-	345	524	566	11586	11586	0	0%
5	527146	MUSTANG	115	526	1506	22631	22632	-1	0%
5	583930	GEN-2014	345	524	566	10874	10875	-1	0%
5	560242	G11-017-	345	534	1529	10337	10337	0	0%
5	527194	LG-PLSHI	115	526	1506	7533	7534	-1	0%
5	527865	CUNNINHA	230	526	1507	18615	18616	-1	0%
5	527041	ARCO_TP	115	526	1506	13051	13051	0	0%
5	527151	GS-MUSTA	230	526	1506	15996	15996	0	0%
5	514776	NEWGRTP2	69	524	566	5774	5775	-1	0%
5	526928	LE-PLNSI	115	526	1506	9522	9523	-1	0%
5	522866	LP-COOK	69	526	1500	35846	35847	-1	0%
5	527276	SEMINOLE	230	526	1506	7331	7332	-1	0%
5	526784	AMOCOWAS	230	526	1505	14131	14131	0	0%
5	584240	GEN-2014	345	526	1508	3241	3242	-1	0%
5	526435	SUNDOWN	230	526	1505	11193	11194	-1	0%
5	582708	G-2011-0	345	534	1529	9215	9215	0	0%
5	514781	CEDARAV2	69	524	566	6043	6044	-1	0%
5	527962	POTASH_J	115	526	1507	15029	15030	-1	0%
5	526792	PRENTICE	115	526	1505	5915	5915	0	0%
5	539668	HARPER 4	138	534	1541	5707	5708	-1	0%
5	522828	LP-MILWA	69	526	1500	8296	8297	-1	0%
5	522888	LP-WADSW	230	526	1500	12723	12724	-1	0%
5	526679	CIRRUS_W	230	526	1505	5076	5077	-1	0%
5	526676	GRASSLAN	115	526	1505	6186	6186	0	0%
5	525738	HALECENT	69	526	1505	2455	2455	0	0%
5	562004	G11-025-	115	526	1505	5968	5969	-1	0%
5	526297	LUBBCK_E	69	526	1505	8086	8086	0	0%
5	525885	SP-NEWDE	69	526	1505	3382	3382	0	0%
5	522861	LP-SOUTH	230	526	1500	17381	17383	-2	0%
5	526146	INDIANA	115	526	1505	9710	9711	-1	0%
5	526268	LUBBCK_S	115	526	1505	19305	19306	-1	0%
5	525779	FLOYD_CN	69	526	1505	5347	5348	-1	0%
5	525926	CROSBY	115	526	1505	5223	5223	0	0%
5	579272	G0744&14	345	524	566	9315	9316	-1	0%
5	526524	WOLFFORT	115	526	1505	11293	11294	-1	0%
5	528027	RDRUNNER	345	526	1507	4026	4027	-1	0%
5	525731	SP-ABERN	69	526	1505	3015	3015	0	0%
5	526162	LP-DOUD_	115	526	1505	11729	11730	-1	0%
5	526192	MURPHY	115	526	1505	10724	10725	-1	0%
5	528185	NLOV_PLT	345	526	1507	4863	4863	0	0%
5	528610	GAINES_G	345	526	1508	6777	6777	0	0%
5	526109	SP-ERSKI	115	526	1505	11421	11422	-1	0%
5	528604	ANDREWS	345	526	1508	6452	6452	0	0%
5	539674	BARBER 4	138	534	1541	8213	8214	-1	0%

Table 3-1: GEN-2015-004 Three-Phase Fault Currents (Continued)

Bus Dist. From POI	BUS NUMBER	BUS NAME	Voltage (kV)	AREA	ZONE	3 Phase Fault Current (A)		Difference (ON - OFF)	
						GenON	GenOFF	Change	%
5	526159	CARLISLE	69	526	1505	2655	2655	0	0%
5	525853	LH-WIL&E	69	526	1505	2567	2568	-1	0%
5	539631	FLATRWD3	138	534	1541	9993	9994	-1	0%

The fault current change with the addition of GEN-2015-004 was negligible since the project is an addition to an existing wind farm.

Table 3-2: GEN-2015-013 Three-Phase Fault Currents

Bus Dist. From POI	BUS NUMBER	BUS NAME	Voltage (kV)	AREA	ZONE	3 Phase Fault Current (A)		Difference (ON - OFF)	
						GenON	GenOFF	Change	%
0	521052	SNYDER 4	138	525	590	5930	5839	91	2%
1	521051	SNYDER 2	69	525	590	6654	6547	107	2%
1	511435	SNYDER-4	138	520	549	6451	6363	88	1%
1	521105	CACHE4	138	525	590	4996	4931	65	1%
2	511475	SNYDER-2	69	520	549	7092	6984	108	2%
2	521070	TIPTONJ2	69	525	590	3894	3836	58	2%
2	521009	NAVAJO 2	69	525	590	3483	3434	49	1%
2	511440	ALTUSJT4	138	520	549	4747	4684	63	1%
2	520954	INDHOMA4	138	525	590	4355	4299	56	1%
2	521024	PARADSE4	138	525	590	5578	5525	53	1%
2	511500	CACHE4	138	520	549	8217	8167	50	1%
3	511472	TIPTE T2	69	520	549	3602	3548	54	2%
3	521069	TIPTON-2	69	525	590	2066	2035	31	2%
3	520914	FREDRIK2	69	525	590	3489	3440	49	1%
3	511462	HEADRIK2	69	520	549	4394	4332	62	1%
3	520805	ALTUSSW2	69	525	590	3414	3366	48	1%
3	529345	OMPARK-4	138	527	1513	4574	4513	61	1%
3	511441	ALTUSJT2	69	520	549	5339	5268	71	1%
3	521043	RUSSELL4	138	525	590	3570	3526	44	1%
3	521106	GRNDFLD4	138	525	590	3323	3282	41	1%
3	511444	ROSVTAP2	69	520	549	3886	3847	39	1%
3	521129	BLUCAN5	138	525	591	5855	5803	52	1%
3	511510	LAIRGST4	138	520	549	12206	12158	48	0%
4	511460	FREDJC-2	69	520	549	2776	2734	42	2%
4	511545	TIPTON 2	69	520	549	2494	2457	37	2%
4	529340	OMFRDFK	69	527	1513	3348	3300	48	1%
4	511543	TIPTN T2	69	520	549	4393	4330	63	1%
4	520804	ALTUSAF2	69	525	590	2775	2737	38	1%
4	520803	ALTUS_ 2	69	525	590	3399	3352	47	1%
4	520945	HOLLSTR2	69	525	590	3560	3511	49	1%
4	529298	OMPVET-4	138	527	1513	4440	4380	60	1%
4	511539	NONATAP2	69	520	549	5309	5239	70	1%
4	521042	RUSSELL2	69	525	590	4224	4170	54	1%
4	520926	GRANFLD2	69	525	590	5617	5550	67	1%
4	512110	LAKEP4WT	138	520	533	2137	2115	22	1%
4	511432	R-AMOCO2	69	520	549	3678	3641	37	1%
4	511465	HOBART-2	69	520	549	5401	5355	46	1%
4	511429	L AIRGS4	138	520	549	11417	11372	45	0%
4	511488	112GORE4	138	520	549	12607	12559	48	0%
4	520814	ANADARK4	138	525	591	33504	33457	47	0%

Table 3-2: GEN-2015-013 Three-Phase Fault Currents (Continued)

Bus Dist. From POI	BUS NUMBER	BUS NAME	Voltage (kV)	AREA	ZONE	3 Phase Fault Current (A)		Difference (ON - OFF)	
						GenON	GenOFF	Change	%
5	511437	COMANC-4	138	520	549	17930	17890	40	0%
5	511477	S.W.S.-4	138	520	549	34348	34296	52	0%
5	520923	GEORGIA4	138	525	587	18632	18607	25	0%
5	515802	GRACMNT4	138	524	567	28469	28431	38	0%
5	520828	BLANCHD4	138	525	591	21854	21826	28	0%
5	520810	ANADARK2	69	525	591	25333	25302	31	0%
5	521031	POCASET4	138	525	591	7662	7656	6	0%
5	520867	CORN TP4	138	525	592	14084	14072	12	0%

The maximum fault current increase with the addition of GEN-2015-013 was about 2%.

*****

4.0 POWER FACTOR ANALYSIS

Power factor analysis was performed to determine if the power factor requirement for each renewable interconnection request is within the capabilities of the specified generators.

4.1 Methodology

Each of the wind farm and solar PV project in Group 07, as well as any previous queued projects sharing the same point of interconnection (POI) were turned off for the power factor analysis. Each of the interconnection generators were replaced with a generator modeled at the high side bus of the collector substation transformers. The replacement generators were modeled to reflect the real power (MW) output of each of the interconnection request generators and were set to maintain a voltage schedule at the point of interconnection consistent with the voltage schedule in the provided base case or 1.0 pu voltage, whichever was higher. The replacement generators had reactive power capability of +/- 9999 MVAr. The analysis was performed for the Cluster Scenario study cases only.

4.2 Power Factor Analysis Results

The base case voltages at the POI for each of the Group 07 projects for Cluster Scenario models are provided in Table 4-1.

Table 4-1: Base Case Group 4 POI Voltages

Machine	PF Capability	POI Bus Number	POI Bus Name	Initial POI Voltage (pu)		
				15SP	15WP	25SP
GEN-2015-004	+/- 0.909	521052	BORDER 7	1.009	1.008	1.013
GEN-2015-013	+/- 0.910	515458	SNYDER 4	1.006	1.01	1.011

Each of the projects in Group 07 was analyzed under the single element contingency conditions listed in Table 4-2.

Table 4-2: Power Factor Contingency Summary

Fault Event	Outage Details
FLT01-3PH	Snyder (521052) to (AEPW) Snyder-4 (511435) 138kV line, near Snyder.
FLT03-3PH	Snyder (521052) to (WFEC) Cache (521105) 138kV line, near Snyder.
FLT05-3PH	Snyder (521052) 138/(521051) 69/(521176) 13.8kV transformer, near Snyder 138kV.
FLT07-3PH	(AEPW) Snyder-4 (511435) to AltusJcn (511440) 138kV line, near Snyder-4.
FLT09-3PH	(AEPW) Snyder-4 (511435) to (AEPW) Cache (511500) 138kV line, near Snyder-4.
FLT11-3PH	(AEPW) Snyder-4 (511435) 138/(511475) 69/(511419) 13.8kV transformer, near Snyder-4.
FLT13-3PH	AltusJcn (511440) to Russell (521043) 138kV line, near AltusJcn.
FLT15-3PH	Hobart Jcn (511463) to Carnegie South (511445) 138kV line, near Hobart Jcn.

Table 4-2: Power Factor Contingency Summary (Continued)

Fault Event	Outage Details
FLT17-3PH	Anadarko (520814) to Blue Canyon V (521129) 138kV line, near Anadarko.
FLT19-3PH	(WFEC) Cache (521105) to Indiahoma (520954) 138kV line, near Cache.
FLT27-3PH	Border (523775) to Woodward (515375) 345kV line, near Border.
FLT29-3PH	Border (523775) to TUCO2 (560022) 345kV line, near Border.
FLT31-3PH	Woodward (515375) to Thistle (539801) 345kV line, ckt1, near Woodward.
FLT33-3PH	Woodward (515375) to G11-014 Tap (560000) 345kV line, ckt1, near Woodward.
FLT35-3PH	Beaver (515554) to G11-014 Tap (560000) 345kV line, ckt1, near Beaver.
FLT37-3PH	Beaver (515554) to Optima (560010) 345kV line, ckt1, near Beaver.
FLT39-3PH	Hitchland (523097) to Optima (560010) 345kV line, ckt1, near Hitchland.
FLT41-3PH	Hitchland (523097) to G14-038 Tap (560011) 345kV line, ckt1, near Hitchland.
FLT43-3PH	Potter Co (523961) to G14-038 Tap (560011) 345kV line, ckt1, near Potter Co.
FLT45-3PH	Thistle (539801) to Wichita (532796) 345kV line, ckt1, near Thistle.
FLT47-3PH	Viola (532798) to Wichita (532796) 345kV line, ckt1, near Viola.
FLT49-3PH	Thistle (539801) to Clark Co (539800) 345kV line, ckt1, near Thistle.
FLT51-3PH	Woodward (515375) to G11-051 Tap (562075) 345kV line, ckt1, near Woodward.
FLT53-3PH	Tatonga (515407) to G11-051 Tap (562075) 345kV line, near Tatonga.
FLT55-3PH*	Tatonga (515407) to Mathewson (515497) 345kV line, near Tatonga.
FLT57-3PH	Cimarron (514901) to Mathewson (515497) 345kV line, near Cimarron.
FLT59-3PH	Cimarron (514901) to Northwest (514880) 345kV line, near Cimarron.
FLT64-3PH	TUCO_Int (525832) to G14-074 Tap (560027) 345kV line circuit 1, near TUCO_Int.
FLT66-3PH	TUCO_Int (525832) 345kV/(525830) 230kV/(525824) 13.2kV transformer, near the 345kV bus.
FLT67-3PH	OKU (525832) to G14-074 Tap (560027) 345kV line circuit 1, near G14-074 Tap.
FLT69-3PH**	TUCO_Int (525832) to Yoakum (526936) 345kV line circuit 1, near TUCO_Int.

*Only applies to 2015 cases, **Only applies to 2025 cases

The power factor requirements for each contingency event in Table 4-2 are listed in Table 4-3 and Table 4-4 for GEN-2015-004 and GEN-2015-013 respectively. There were no contingency events for which the required power factor at the POI exceeded the capability of the wind farm or solar inverter.

Table 4-3: GEN-2015-004 Power Factor Requirements

Contingency Event	2015 Summer Peak			2015 Winter Peak			2025 Summer Peak		
	P (MW)	Q (MVar)	Power Factor	P (MW)	Q (MVar)	Power Factor	P (MW)	Q (MVar)	Power Factor
FLT27-3PH	303.6	-17.5	99.8%	303.6	-14.0	99.9%	303.6	-8.8	100.0%
FLT29-3PH	303.6	0.3	100.0%	303.6	5.9	100.0%	303.6	-4.1	100.0%
FLT31-3PH	303.6	-36.9	99.3%	303.6	-35.3	99.3%	303.6	-41.0	99.1%
FLT33-3PH	303.6	-33.6	99.4%	303.6	-32.9	99.4%	303.6	-42.9	99.0%
FLT35-3PH	303.6	-31.0	99.5%	303.6	-30.3	99.5%	303.6	-37.9	99.2%
FLT37-3PH	303.6	-32.3	99.4%	303.6	-31.7	99.5%	303.6	-38.6	99.2%

Table 4-3: GEN-2015-004 Power Factor Requirements (Continued)

Contingency Event	2015 Summer Peak			2015 Winter Peak			2025 Summer Peak		
	P (MW)	Q (MVar)	Power Factor	P (MW)	Q (MVar)	Power Factor	P (MW)	Q (MVar)	Power Factor
FLT39-3PH	303.6	-33.6	99.4%	303.6	-32.7	99.4%	303.6	-39.4	99.2%
FLT41-3PH	303.6	-29.1	99.5%	303.6	-28.6	99.6%	303.6	-38.6	99.2%
FLT43-3PH	303.6	-31.9	99.5%	303.6	-30.6	99.5%	303.6	-39.1	99.2%
FLT45-3PH	303.6	-34.3	99.4%	303.6	-33.3	99.4%	303.6	-38.9	99.2%
FLT47-3PH	303.6	-32.3	99.4%	303.6	-30.2	99.5%	303.6	-39.4	99.2%
FLT49-3PH	303.6	-32.0	99.4%	303.6	-30.8	99.5%	303.6	-38.6	99.2%
FLT51-3PH	303.6	-30.5	99.5%	303.6	-27.0	99.6%	303.6	-36.4	99.3%
FLT53-3PH	303.6	-34.3	99.4%	303.6	-30.5	99.5%	303.6	-38.2	99.2%
FLT55-3PH*	303.6	-38.6	99.2%	303.6	-34.3	99.4%			
FLT57-3PH	303.6	-33.4	99.4%	303.6	-32.5	99.4%	303.6	-39.7	99.2%
FLT59-3PH	303.6	-34.0	99.4%	303.6	-32.4	99.4%	303.6	-39.6	99.2%
FLT64-3PH	303.6	-8.0	100.0%	303.6	-20.0	99.8%	303.6	-34.0	99.4%
FLT66-3PH	303.6	-35.0	99.3%	303.6	-33.2	99.4%	303.6	-39.6	99.2%
FLT67-3PH	303.6	-4.4	100.0%	303.6	-19.3	99.8%	303.6	-36.2	99.3%
FLT69-3PH**							303.6	-36.2	99.3%

*Only applies to 2015 cases, **Only applies to 2025 cases

The required power factor for GEN-2015-004 for the simulation outage conditions was within the Siemens Turbine capability of +/- 0.909. The customer may be required to add capacitor and/or reactor banks depending upon its final collector system design. Per tariff requirements, the Generating Facility will be required to meet the standard 95% power factor requirement at the Point of Interconnection.

Table 4-4: GEN-2015-013 Power Factor Requirements

Contingency Event	2015 Summer Peak			2015 Winter Peak			2025 Summer Peak		
	P (MW)	Q (MVar)	Power Factor	P (MW)	Q (MVar)	Power Factor	P (MW)	Q (MVar)	Power Factor
FLT01-3PH	120.0	-28.7	97.3%	120.0	-30.9	96.8%	120.0	-26.9	97.6%
FLT03-3PH	120.0	-5.9	99.9%	120.0	-7.9	99.8%	120.0	-13.9	99.3%
FLT05-3PH	120.0	4.1	99.9%	120.0	1.8	100.0%	120.0	4.0	99.9%
FLT07-3PH	120.0	-8.6	99.7%	120.0	-10.0	99.7%	120.0	-8.7	99.7%
FLT09-3PH	120.0	-25.5	97.8%	120.0	-31.8	96.7%	120.0	-24.1	98.0%
FLT11-3PH	120.0	-5.1	99.9%	120.0	-8.2	99.8%	120.0	-6.1	99.9%
FLT13-3PH	120.0	-3.1	100.0%	120.0	-5.4	99.9%	120.0	-5.2	99.9%
FLT15-3PH	120.0	0.0	100.0%	120.0	0.7	100.0%	120.0	-8.3	99.8%
FLT17-3PH	120.0	2.7	100.0%	120.0	1.1	100.0%	120.0	-4.6	99.9%
FLT19-3PH	120.0	-2.5	100.0%	120.0	-5.3	99.9%	120.0	-4.8	99.9%

The required power factor GEN-2015-013 was observed to be within the Eaton Solar Inverter capability of +/- 0.910. The customer may be required to add capacitor and/or reactor banks depending upon its

final collector system design. Per tariff requirements, the Generating Facility will be required to meet the standard 95% power factor requirement at the Point of Interconnection.

* * * * *

5.0 REACTIVE POWER ANALYSIS

The reactive power analysis was performed for the Cluster Scenario with POI voltage at 230kV or 345kV to determine the reactive power contribution from the project's interconnection line and collector transformer and cables. The goal of the analysis is to size shunt reactors at the project substation high side bus to reduce POI reactive power value to approximately zero.

5.1 Methodology

For Group 07 projects, only GEN-2015-004 interconnection request is a wind farm that interconnects to a 345kV or 230kV bus. Reactive power analysis was not performed for GEN-2015-013 since the POI voltage is below 230kV and the project is a Solar PV farm. All the generators and capacitor banks (if installed) were switched out of service while other collector system elements remained in-service. If more than one generator/capacitor bank was modeled in the project, all generators/capacitor banks were switched off. Shunt reactors were tested at the study project substation high side bus to bring the MVar flow into the POI down to approximately zero.

5.2 Reactive Power Analysis Results

The results from Reactive Power Analysis showed that GEN-2015-004 interconnection system requires approximately 21 MVar shunt reactance at the high side to reduce the POI MVar to zero. This represents the contributions from the collector system. See Figure 5-1 for the shunt reactor required to reduce the POI voltage to approximately zero.

Figure 5-1: GEN-2015-004 Shunt Reactor Requirement

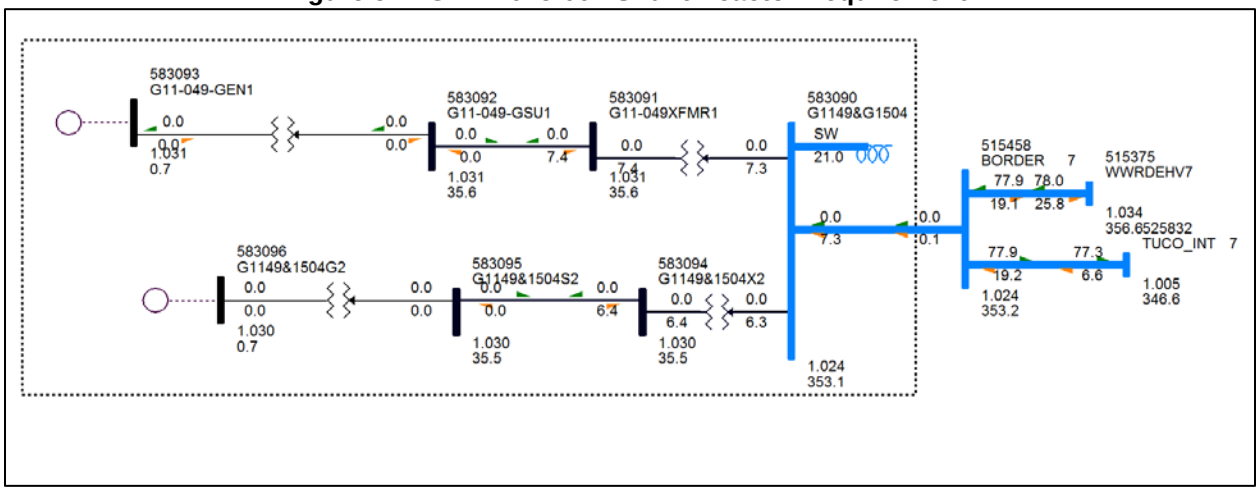

6.0 STABILITY ANALYSIS

Stability Analysis was performed to identify impacts on the system stability resulting from the interconnection of the Group 07 projects.

6.1 Methodology

The Stability Analysis was performed using all the Cluster Scenario and Stand Alone Scenario cases. The power flow models and associated dynamics database were initialized (no fault test) to confirm that there were no errors in the initial conditions of the system and the dynamic data. The dynamics model data for each of the Group 07 projects is provided in Appendix A. All cases were checked to determine the pre-fault voltage and the buses with voltage range outside of 0.9 pu to 1.1 pu were noted. The stability analysis was performed using PSS/E version 32.

During the fault simulations, the active power (PELEC), reactive power (QELEC), terminal voltage (ETERM), angle (ANGL) and speed (SPD) were monitored for all Group 07 generation interconnection requests and prior queued projects listed in Table 1-1 and Table 2-3. The machine rotor angle was monitored only for synchronous machines and speed was monitored only for asynchronous machines. The angles of all the synchronous machines within areas 520 (AEPW), 524 (OKGE), 525 (WFEC), 526 (SPS), 531 (MIDW), 534 (SUNC) and 536 (WERE) were monitored. The voltages of the 69 kV and above buses used in the fault events in Table 6-1 were monitored. In addition, the voltages of all 69 kV and above buses within 6 buses of the POI of GEN-2015-004 and POI of GEN-2015-013 were monitored.

6.2 Fault Definitions

Three phase fault and single phase fault events provided by SPP were simulated for the applicable study cases. The studied fault events are listed in Table 5-1. Total of 71 faults were applied for 2015 Summer peak and 2015 Winter Peak Cluster Scenarios and 72 faults were applied for 2025 Summer Peak Cluster Scenarios. A total of 5 prior outage cases were created to simulate faults FLT-21, FLT-22, FLT23 applicable to GEN-2015-013 and faults FLT-71, FLT-72, FLT-73, FLT 74, FLT-75 and FLT-76. However, only the faults indicated with an ‘X’ were studied for the respective Stand Alone Scenarios.

Table 6-1: Fault Definitions

Fault Name	Fault Description	GEN-2015-004	GEN-2015-013
FLT01-3PH	3 phase fault on the Snyder (521052) to (AEPW) Snyder-4 (511435) 138kV line, near Snyder. a. Apply fault at the Snyder 138kV bus. b. Clear fault after 5 cycles by tripping the faulted line. c. Wait 20 cycles, and then re-close the line in (b) back into the fault. d. Leave fault on for 5 cycles, then trip the line in (b) and remove fault.		X
FLT02-1PH	*Single phase fault and sequence like previous*		X
FLT03-3PH	3 phase fault on the Snyder (521052) to (WFEC) Cache (521105) 138kV line, near Snyder. a. Apply fault at the Snyder 138kV bus. b. Clear fault after 5 cycles by tripping the faulted line. c. Wait 20 cycles, and then re-close the line in (b) back into the fault. d. Leave fault on for 5 cycles, then trip the line in (b) and remove fault.		X
FLT04-1PH	*Single phase fault and sequence like previous*		X
FLT05-3PH	3 phase fault on the Snyder (521052) 138/(521051) 69/(521176) 13.8kV transformer, near Snyder 138kV. a. Apply fault at the Snyder 138kV bus. b. Clear fault after 5 cycles by tripping the faulted line.		X
FLT06-1PH	*Single phase fault and sequence like previous*		X
FLT07-3PH	3 phase fault on the (AEPW) Snyder-4 (511435) to AltusJcn (511440) 138kV line, near Snyder-4. a. Apply fault at the Snyder-4 138kV bus. b. Clear fault after 5 cycles by tripping the faulted line. c. Wait 20 cycles, and then re-close the line in (b) back into the fault. d. Leave fault on for 5 cycles, then trip the line in (b) and remove fault.		X
FLT08-1PH	*Single phase fault and sequence like previous*		X
FLT09-3PH	3 phase fault on the (AEPW) Snyder-4 (511435) to (AEPW) Cache (511500) 138kV line, near Snyder-4. a. Apply fault at the Snyder-4 138kV bus. b. Clear fault after 5 cycles by tripping the faulted line. c. Wait 20 cycles, and then re-close the line in (b) back into the fault. d. Leave fault on for 5 cycles, then trip the line in (b) and remove fault.		X
FLT10-1PH	*Single phase fault and sequence like previous*		X
FLT11-3PH	3 phase fault on the (AEPW) Snyder-4 (511435) 138/(511475) 69/(511419) 13.8kV transformer, near Snyder-4. a. Apply fault at the Snyder-4 138kV bus. b. Clear fault after 5 cycles by tripping the faulted line.		X
FLT12-1PH	*Single phase fault and sequence like previous*		X
FLT13-3PH	3 phase fault on the AltusJcn (511440) to Russell (521043) 138kV line, near AltusJcn. a. Apply fault at the AltusJcn 138kV bus. b. Clear fault after 5 cycles by tripping the faulted line. c. Wait 20 cycles, and then re-close the line in (b) back into the fault. d. Leave fault on for 5 cycles, then trip the line in (b) and remove fault.		X
FLT14-1PH	*Single phase fault and sequence like previous*		X
FLT15-3PH	3 phase fault on the Hobart Jcn (511463) to Carnegie South (511445) 138kV line, near Hobart Jcn. a. Apply fault at the Hobart Jcn 69kV bus. b. Clear fault after 5 cycles by tripping the faulted line. c. Wait 20 cycles, and then re-close the line in (b) back into the fault. d. Leave fault on for 5 cycles, then trip the line in (b) and remove fault.		X
FLT16-1PH	*Single phase fault and sequence like previous*		X

Table 6-1: Fault Definitions (Continued)

Fault Name	Fault Description	GEN-2015-004	GEN-2015-013
FLT17-3PH	3 phase fault on the Anadarko (520814) to Blue Canyon V (521129) 138kV line, near Anadarko. a. Apply fault at the Anadarko 138kV bus. b. Clear fault after 5 cycles by tripping the faulted line. c. Wait 20 cycles, and then re-close the line in (b) back into the fault. d. Leave fault on for 5 cycles, then trip the line in (b) and remove fault.		X
FLT18-1PH	*Single phase fault and sequence like previous*		X
FLT19-3PH	3 phase fault on the (WFEC) Cache (521105) to Indiahoma (520954) 138kV line, near Cache. a. Apply fault at the Cache 138kV bus. b. Clear fault after 5 cycles by tripping the faulted line. c. Wait 20 cycles, and then re-close the line in (b) back into the fault. d. Leave fault on for 5 cycles, then trip the line in (b) and remove fault.		X
FLT20-1PH	*Single phase fault and sequence like previous*		X
FLT21-PO	**Prior Outage Scenario 1** a. Prior Outage: Switch out the Snyder (521052) 138/(521051) 69/(521176) 13.8kV transformer. b. Apply a 3 phase fault on the Snyder (521052) to Cache (521105) 138kV line, near Snyder. c. Clear fault after 5 cycles by tripping the faulted line.		X
FLT22-PO	**Prior Outage Scenario 2** a. Prior Outage: Switch out the Snyder (521052) 138/(521051) 69/(521176) 13.8kV transformer. b. Apply a 3 phase fault on the Snyder (521052) to (AEPW) Snyder-4 (511435) 138kV line, near Snyder. c. Clear fault after 5 cycles by tripping the faulted line.		X
FLT23-PO	**Prior Outage Scenario 3** a. Prior Outage: Switch out the Snyder (521052) to (AEPW) Snyder-4 (511435) 138kV line. b. Apply a 3 phase fault on the Snyder (521052) to Cache (521105) 138kV line, near Snyder. c. Clear fault after 5 cycles by tripping the faulted line.		X
FLT24-SB	**Stuck Breaker Scenario 1** a. Apply a single phase fault on Snyder (521052) 138kV bus. b. Wait 16 cycles and remove fault. c. Trip Snyder (521052) 138/(521051) 69/(521176) 13.8kV transformer. d. Trip Snyder (521052) to (AEPW) Snyder-4 (511435) 138kV line.		X
FLT25-SB	**Stuck Breaker Scenario 2** a. Apply a single phase fault on Snyder (521052) 138kV bus. b. Wait 16 cycles and remove fault. c. Trip Snyder (521052) 138/(521051) 69/(521176) 13.8kV transformer. d. Trip Snyder (521052) to (AEPW) Cache (521105) 138kV line.		X
FLT26-SB	**Stuck Breaker Scenario 3** a. Apply a single phase fault on Snyder (521052) 138kV bus. b. Wait 16 cycles and remove fault. c. Trip Snyder (521052) to (AEPW) Snyder-4 (511435) 138kV line. d. Trip Snyder (521052) to (AEPW) Cache (521105) 138kV line.		X
FLT27-3PH	3 phase fault on the Border (515458) to Woodward (515375) 345kV line, near Border. a. Apply fault at the Border 345kV bus. b. Clear fault after 5 cycles by tripping the faulted line. c. Wait 20 cycles, and then re-close the line in (b) back into the fault. d. Leave fault on for 5 cycles, then trip the line in (b) and remove fault.	X	

Table 6-1: Fault Definitions (Continued)

Fault Name	Fault Description	GEN-2015-004	GEN-2015-013
FLT28-1PH	*Single phase fault and sequence like previous*	X	
FLT29-3PH	3 phase fault on the Border (515458) to TUCO (525832) 345kV line, near Border. a. Apply fault at the Border 345kV bus. b. Clear fault after 5 cycles by tripping the faulted line. c. Wait 20 cycles, and then re-close the line in (b) back into the fault. d. Leave fault on for 5 cycles, then trip the line in (b) and remove fault.	X	
FLT30-1PH	*Single phase fault and sequence like previous*	X	
FLT31-3PH	3 phase fault on the Woodward (515375) to Thistle (539801) 345kV line, ckt1, near Woodward. a. Apply fault at the Woodward 345kV bus. b. Clear fault after 5 cycles by tripping the faulted line. c. Wait 20 cycles, and then re-close the line in (b) back into the fault. d. Leave fault on for 5 cycles, then trip the line in (b) and remove fault.	X	
FLT32-1PH	*Single phase fault and sequence like previous*	X	
FLT33-3PH	3 phase fault on the Woodward (515375) to G11-014 Tap (560000) 345kV line, ckt1, near Woodward. a. Apply fault at the Woodward 345kV bus. b. Clear fault after 5 cycles by tripping the faulted line. c. Wait 20 cycles, and then re-close the line in (b) back into the fault. d. Leave fault on for 5 cycles, then trip the line in (b) and remove fault.	X	
FLT34-1PH	*Single phase fault and sequence like previous*	X	
FLT35-3PH	3 phase fault on the Beaver (515554) to G11-014 Tap (560000) 345kV line, ckt1, near Beaver. a. Apply fault at the Beaver 345kV bus. b. Clear fault after 5 cycles by tripping the faulted line. c. Wait 20 cycles, and then re-close the line in (b) back into the fault. d. Leave fault on for 5 cycles, then trip the line in (b) and remove fault.	X	
FLT36-1PH	*Single phase fault and sequence like previous*	X	
FLT37-3PH	3 phase fault on the Beaver (515554) to Optima (560010) 345kV line, ckt1, near Beaver. a. Apply fault at the Beaver 345kV bus. b. Clear fault after 5 cycles by tripping the faulted line. c. Wait 20 cycles, and then re-close the line in (b) back into the fault. d. Leave fault on for 5 cycles, then trip the line in (b) and remove fault.	X	
FLT38-1PH	*Single phase fault and sequence like previous*	X	
FLT39-3PH	3 phase fault on the Hitchland (523097) to Optima (560010) 345kV line, ckt1, near Hitchland. a. Apply fault at the Hitchland 345kV bus. b. Clear fault after 5 cycles by tripping the faulted line. c. Wait 20 cycles, and then re-close the line in (b) back into the fault. d. Leave fault on for 5 cycles, then trip the line in (b) and remove fault.	X	
FLT40-1PH	*Single phase fault and sequence like previous*	X	
FLT41-3PH	3 phase fault on the Hitchland (523097) to G14-038 Tap (560011) 345kV line, ckt1, near Hitchland. a. Apply fault at the Hitchland 345kV bus. b. Clear fault after 5 cycles by tripping the faulted line. c. Wait 20 cycles, and then re-close the line in (b) back into the fault. d. Leave fault on for 5 cycles, then trip the line in (b) and remove fault.	X	
FLT42-1PH	*Single phase fault and sequence like previous*	X	

Table 6-1: Fault Definitions (Continued)

Fault Name	Fault Description	GEN-2015-004	GEN-2015-013
FLT43-3PH	3 phase fault on the Potter Co (523961) to G14-038 Tap (560011) 345kV line, ckt1, near Potter Co. a. Apply fault at the Potter Co. 345kV bus. b. Clear fault after 5 cycles by tripping the faulted line. c. Wait 20 cycles, and then re-close the line in (b) back into the fault. d. Leave fault on for 5 cycles, then trip the line in (b) and remove fault.	X	
FLT44-1PH	*Single phase fault and sequence like previous*	X	
FLT45-3PH	3 phase fault on the Thistle (539801) to G1524&G1525T (560033) 345kV line, ckt1, near Thistle. a. Apply fault at the Thistle 345kV bus. b. Clear fault after 5 cycles by tripping the faulted line. c. Wait 20 cycles, and then re-close the line in (b) back into the fault. d. Leave fault on for 5 cycles, then trip the line in (b) and remove fault.	X	
FLT46-1PH	*Single phase fault and sequence like previous*	X	
FLT47-3PH	3 phase fault on the Viola (532798) to Wichita (532796) 345kV line, ckt1, near Viola. a. Apply fault at the Viola 345kV bus. b. Clear fault after 5 cycles by tripping the faulted line. c. Wait 20 cycles, and then re-close the line in (b) back into the fault. d. Leave fault on for 5 cycles, then trip the line in (b) and remove fault.	X	
FLT48-1PH	*Single phase fault and sequence like previous*	X	
FLT49-3PH	3 phase fault on the Thistle (539801) to Clark Co (539800) 345kV line, ckt1, near Thistle. a. Apply fault at the Thistle 345kV bus. b. Clear fault after 5 cycles by tripping the faulted line. c. Wait 20 cycles, and then re-close the line in (b) back into the fault. d. Leave fault on for 5 cycles, then trip the line in (b) and remove fault.	X	
FLT50-1PH	*Single phase fault and sequence like previous*	X	
FLT51-3PH	3 phase fault on the Woodward (515375) to G11-051 Tap (562075) 345kV line, ckt1, near Woodward. a. Apply fault at the Woodward 345kV bus. b. Clear fault after 5 cycles by tripping the faulted line. c. Wait 20 cycles, and then re-close the line in (b) back into the fault. d. Leave fault on for 5 cycles, then trip the line in (b) and remove fault.	X	
FLT52-1PH	*Single phase fault and sequence like previous*	X	
FLT53-3PH	3 phase fault on the Tatonga (515407) to G11-051 Tap (562075) 345kV line, near Tatonga. a. Apply fault at the Tatonga 345kV bus. b. Clear fault after 5 cycles by tripping the faulted line. c. Wait 20 cycles, and then re-close the line in (b) back into the fault. d. Leave fault on for 5 cycles, then trip the line in (b) and remove fault.	X	
FLT54-1PH	*Single phase fault and sequence like previous*	X	
FLT55-3PH (2015WP & 2015SP Only)	3 phase fault on the Tatonga (515407) to Northwest (514880) 345kV line, near Tatonga. a. Apply fault at the Tatonga 345kV bus. b. Clear fault after 5 cycles by tripping the faulted line. c. Wait 20 cycles, and then re-close the line in (b) back into the fault. d. Leave fault on for 5 cycles, then trip the line in (b) and remove fault.	X	
FLT56-1PH	*Single phase fault and sequence like previous*	X	

Table 6-1: Fault Definitions (Continued)

Fault Name	Fault Description	GEN-2015-004	GEN-2015-013
FLT57-3PH	3 phase fault on the Cimarron (514901) to Mathewson (515497) 345kV line, ckt 1, near Cimarron. a. Apply fault at the Cimarron 345kV bus. b. Clear fault after 5 cycles by tripping the faulted line. c. Wait 20 cycles, and then re-close the line in (b) back into the fault. d. Leave fault on for 5 cycles, then trip the line in (b) and remove fault.	X	
FLT58-1PH	*Single phase fault and sequence like previous*	X	
FLT59-3PH	3 phase fault on the Cimarron (514901) to Northwest (514880) 345kV line, near Cimarron. a. Apply fault at the Cimarron 345kV bus. b. Clear fault after 5 cycles by tripping the faulted line. c. Wait 20 cycles, and then re-close the line in (b) back into the fault. d. Leave fault on for 5 cycles, then trip the line in (b) and remove fault.	X	
FLT60-1PH	*Single phase fault and sequence like previous*	X	
FLT64-3PH	3 phase fault on the TUCO_Int (525832) to G14-074 Tap (560027) 345kV line circuit 1, near TUCO_Int. a. Apply fault at the TUCO_Int 345kV bus. b. Clear fault after 5 cycles by tripping the faulted line. c. Wait 20 cycles, and then re-close the line in (b) back into the fault. d. Leave fault on for 5 cycles, then trip the line in (b) and remove fault.	X	
FLT65-1PH	*Single phase fault and sequence like previous*	X	
FLT66-3PH	3 phase fault on the TUCO_Int (525832) 345kV/(525830) 230kV/(525824) 13.2kV transformer, near the 345kV bus. a. Apply fault at the TUCO_Int 345kV bus. b. Clear fault after 5 cycles by tripping the faulted transformer.	X	
FLT67-3PH	3 phase fault on the OKU (511458 to G14-074 Tap (560027) 345kV line circuit 1, near G14-074 Tap. a. Apply fault at the G14-074 Tap 345kV bus. b. Clear fault after 5 cycles by tripping the faulted line. c. Wait 20 cycles, and then re-close the line in (b) back into the fault. d. Leave fault on for 5 cycles, then trip the line in (b) and remove fault.	X	
FLT68-1PH	*Single phase fault and sequence like previous*	X	
FLT69-3PH 2025SP Only	FOR 6/1/2020 and BEYOND 3 phase fault on the TUCO_Int (525832) to Yoakum (526936) 345kV line circuit 1, near TUCO_Int. a. Apply fault at the TUCO_Int 345kV bus. b. Clear fault after 5 cycles by tripping the faulted line. c. Wait 20 cycles, and then re-close the line in (b) back into the fault. d. Leave fault on for 5 cycles, then trip the line in (b) and remove fault.	X	
FLT70-1PH	*Single phase fault and sequence like previous*	X	
FLT71-PO	**Prior Outage Scenario 4** a. Prior Outage: Switch out the OKU (511546) to G14-074 Tap (560027) 345kV line circuit 1. b. Apply a 3 phase fault on the TUCO_Int (525832) 345kV/(525830) 230kV/(525824) 13.2kV transformer, near the 345kV bus. c. Clear fault after 5 cycles by tripping the faulted line.	X	
FLT72-PO 2025SP Only	FOR 6/1/2020 and BEYOND **Prior Outage Scenario 5** a. Prior Outage: Switch out the OKU (511546) to G14-074 Tap (560027) 345kV line circuit 1. b. Apply a 3 phase fault on the TUCO_Int (525832) to Yoakum (526936) 345kV line circuit 1, near TUCO_Int. c. Clear fault after 5 cycles by tripping the faulted line.	X	

Table 6-1: Fault Definitions (Continued)

Fault Name	Fault Description	GEN-2015-004	GEN-2015-013
FLT73-PO	**Prior Outage Scenario 6** a. Prior Outage: Switch out the Woodward (515375) to G11-051 Tap (562075) 345kV line circuit 1. b. Apply a 3 phase fault on the Woodward (515375) 345/ (515376) 138/ (515799) 13.8kV line circuit 1, near Woodward. c. Clear fault after 5 cycles by tripping the faulted line.	X	
FLT74-PO	**Prior Outage Scenario 7** a. Prior Outage: Switch out the Woodward (515375) to G11-051 Tap (562075) 345kV line circuit 1. b. Apply a 3 phase fault on the Woodward (515375) to G11-051 Tap (562075) 345kV line circuit 2, near Woodward. c. Clear fault after 5 cycles by tripping the faulted line.	X	
FLT75-PO	**Prior Outage Scenario 8** a. Prior Outage: Switch out the Woodward (515375) to G11-014 Tap (560000) 345kV line circuit 1. b. Apply a 3 phase fault on the Woodward (515375) to G11-014 Tap (560000) 345kV line circuit 2, near Woodward. c. Clear fault after 5 cycles by tripping the faulted line.	X	
FLT76-PO	**Prior Outage Scenario 9** a. Prior Outage: Switch out the Woodward (515375) to Thistle (539801) 345kV line circuit 1. b. Apply a 3 phase fault on the Woodward (515375) to Thistle (539801) 345kV line circuit 2, near Woodward. c. Clear fault after 5 cycles by tripping the faulted line.	X	
FLT7-SB	**Stuck Breaker Scenario 4** a. Apply a single phase fault on TUCO_Int (525832) 345kV bus. b. Wait 16 cycles and remove fault. c. Trip TUCO_Int (525832) 345kV/(525830) 230kV/(525824) 13.2kV transformer, circuit 1. d. Trip TUCO_Int (525832) to G14-074 Tap (560027) line.	X	

Single-line-to-ground faults were also simulated by using the PSS/E SCMU function which automatically calculates the fault levels at the specified fault location.

6.3 Cluster Scenario Results

For the Cluster Scenario, the machine rotor angle damping and transient voltage recovery criteria were met for all faults studied. The Cluster Scenario dynamic stability results and plots are provided in Appendix B.

6.4 Stand Alone Scenario Results

For the Stand Alone Scenario, the machine rotor angle damping and transient voltage recovery criteria were met for all faults studied. The Stand Alone Scenario dynamic stability results and plots are provided in Appendix C.

*****

7.0 CONCLUSIONS

The purpose of this study was to evaluate the impacts of the proposed Group 07 generation interconnection projects on the SPP transmission system. Short circuit analysis, power factor analysis, reactive power analysis and stability analysis were performed for the evaluation.

7.1 Short Circuit Analysis

The results from short circuit analysis showed that the maximum change in the fault current in the immediate systems at or near GEN-2015-004 was negligible and about 2% for GEN-2015-013. All three phase current levels with the Group 07 generators online were below 43,000 A. The highest fault levels for GEN-2015-004 and GEN-2015-013 were 42,007 A and 34,347 A respectively.

7.2 Power Factor Analysis

The power factor requirement for GEN-2015-04 was within Siemens Turbine capability of +/- 0.909. The power factor requirement for GEN-2015-013 was within the Eaton Solar Inverter capability of +/- 0.910. The minimum power factors at the POI's for GEN-2015-004 and GEN-2015-013 were 99.0% and 96.7%, respectively. The customers may be required to add capacitor and/or reactor banks depending upon its final collector system design. Per tariff requirements, the Generating Facility will be required to meet the standard 95% power factor requirement at the Point of Interconnection.

7.3 Reactive Power Analysis

The results from reactive power analysis showed that GEN-2015-004 interconnection system requires about 21 MVar shunt reactor at the high side to reduce the POI MVar to zero. Reactive power analysis was not performed for GEN-2015-013 since the POI voltage is below 230kV.

7.4 Stability Analysis

The stability analysis showed no generator tripping, machine rotor angle damping violations or transient voltage recovery violations associated with the Group 07 projects for the simulated fault events. The stability analysis results showed that the Group 07 projects met the low-voltage ride through and pre-fault voltage recovery requirements of FERC Order 661A for the fault scenarios analyzed. There were no system stability issues caused by the interconnection of the Group 07 projects which required mitigation. It should be noted that the results of this study are based on available data and assumptions made at the time of this study. If any of the data and/or assumptions change, the results provided in this report may not apply.

******

CREATE AMAZING.

Burns & McDonnell World Headquarters
9400 Ward Parkway
Kansas City, MO 64114
O 816-333-9400
F 816-333-3690
www.burnsmcd.com

Q: Group 8 Dynamic Stability Analysis Report

See MEPPI study report on next page

MITSUBISHI ELECTRIC POWER PRODUCTS, INC.
POWER SYSTEMS ENGINEERING SERVICES
530 KEYSTONE DRIVE
WARRENDALE, PA 15086, U.S.A.

Phone: (724) 778-5111 Fax: (724) 778-5149
Home Page: www.meppi.com

Southwest Power Pool, Inc. (SPP)

DISIS-2015-001 (Group 08) Definitive Impact Study

Final Report

PXE-1074
Revision #00

July 2015

Submitted By:
Mitsubishi Electric Power Products, Inc. (MEPPI)
Power Systems Engineering Services Department
Warrendale, PA

Title: **DISIS-2015-001 (Group 8) Definitive Impact Study: Final Report PXE-1074**
Date: July 2015
Author: Elizabeth C. Gall; Engineer I, Power Systems Engineering Dept. *Elizabeth C. Gall*
Reviewed: Nicholas W. Tenza; Engineer II, Power Systems Engineering Dept. *Nicholas W. Tenza*
Approved: Elizabeth M. Cook; Senior Engineer, Power Systems Engineering Dept. *Elizabeth M. Cook*

EXECUTIVE SUMMARY

SPP requested a Definitive Interconnection System Impact Study (DISIS). The DISIS required a Stability Analysis, Short Circuit Analysis, Power Factor Analysis, and Low Wind/No Wind Analysis detailing the impacts of the interconnecting projects as shown in Table ES-1.

Table ES-1
Interconnection Projects Evaluated

Request	Size (MW)	Generator Model	Point of Interconnection
GEN-2015-001	200	Vestas V110 2.0MW	Ranch Road 345kV
GEN-2015-003	200	Vestas V110 2.0MW	Renfrow 345kV
GEN-2015-015	154.6	Siemens 2.3MW with Power Boost (115kW => 2.415MW)	Tap Medford Tap – Coyote 138kV
GEN-2015-016	200	Vestas V110 2.0MW	Tap Centerville – Marmaton 161kV
GEN-2015-024	220	GE 2.0MW	Tap Wichita - Thistle 345kV circuit 1
GEN-2015-025	220	GE 2.0MW	Tap Wichita - Thistle 345kV circuit 2
GEN-2015-028	3.0 uprate to GEN-2009-025 for total 62.8MW	Siemens 2.3MW with Power Boost (115kW => 2.415MW)	Nardins 69kV
GEN-2015-030	200.1	GE 2.3MW	Sooner 345kV
ASGI-2015-004	54.300 Summer 56.364 Winter	GENSAL	Coffeyville Municipal Light & Power Northern Industrial Park Substation 69kV

SUMMARY OF STABILITY ANALYSIS

The Stability Analysis determined that there were no contingencies that resulted in system instability, generation tripping offline, or voltage violations for the 2015 Summer Peak, 2015 Winter Peak, and 2025 Summer Peak conditions when all generation interconnection requests

were at 100% output for both the Cluster Scenario study and the Stand Alone Scenario study. Thus, no mitigations or upgrades were required.

Note contingencies, FLT01-3PH and FLT03-3PH, required the "LVRT extreme UV limit" value in the "VWVRP7" dynamic model of GEN-2015-001 to be changed from 0.05 p.u. to 0.0 p.u. in order for GEN-2015-001 to remain online, as discussed with SPP. The dynamic file modification was used to complete the analysis.

Several voltage buses consistently fell outside of the 0.95 p.u. to 1.05 p.u. range. All instances were observed for pre-fault conditions and since all voltages returned to pre-fault conditions, no mitigation was required.

SUMMARY OF THE SHORT CIRCUIT ANALYSIS

The short circuit analysis was performed on the 2025 Summer Peak power flow for all study projects. Refer to Table ES-2 for a list of maximum fault currents observed for each study project.

Table ES-2
List of Maximum Fault Currents Observed for Each Study Project

Study Project	POI Name	Fault Current at POI (kA)	Maximum Fault Current (kA)	Fault Location	Bus Voltage (kV)
GEN-2015-001	Ranch Road 345 kV	12.91	41.57	NORTWST4	138
GEN-2015-003	Renfrow 345 kV	12.87	41.57	NORTWST4	138
GEN-2015-015	Tap Medford - Coyote 138 kV	8.51	24.56	WICHITA7	345
GEN-2015-016	Tap Centerville - Marmaton 161 kV	7.26	24.67	LACYGNE7	345
GEN-2015-024	Tap Witchita - Thistle 345 kV circuit 1	24.56	41.45	EVANS S4	138
GEN-2015-025	Tap Witchita - Thistle 345 kV circuit 2				
GEN-2015-028	Nardins 69 kV	5.52	15.67	WHEAGLE4	138
GEN-2015-030	Sooner 345 kV	22.77	57.59	SEMINOL4	138
ASGI-2015-004	Coffeyville Municipal Light & Power Northern Industrial Park Substation 69 kV	8.59	26.11	ONETA--7	345

SUMMARY OF POWER FACTOR ANALYSIS

For all the generators that follow, the power factor is measured at the point of interconnection (POI).

Study Generator GEN-2015-001

The Power Factor Analysis shows that GEN-2015-001 has a power factor range of 0.957 to 0.999 leading (absorbing) for the 2015 Summer Peak conditions, a power factor range of 0.980

leading (absorbing) to 1.00 (unity) for the 2015 Winter Peak conditions, and a power factor range of 0.986 to 0.999 leading (absorbing) for the 2025 Summer Peak conditions.

Study Generator GEN-2015-003

The Power Factor Analysis shows that GEN-2015-003 has a power factor range of 0.979 lagging (supplying) to 0.986 leading (absorbing) for the 2015 Summer Peak conditions, a power factor range of 0.898 lagging (supplying) to 0.994 leading (absorbing) for the 2015 Winter Peak conditions, and a power factor range of 0.983 leading (supplying) to 1.00 (unity) for the 2025 Summer Peak conditions.

Study Generator GEN-2015-015

The Power Factor Analysis shows that GEN-2015-015 has a power factor range of 0.946 lagging (supplying) to 0.991 leading (absorbing) for the 2015 Summer Peak conditions, a power factor range of 0.959 lagging (supplying) to 0.991 leading (absorbing) for the 2015 Winter Peak conditions, and a power factor range of 0.991 lagging (supplying) to 0.996 leading (absorbing) for the 2025 Summer Peak conditions.

Study Generator GEN-2015-016

The Power Factor Analysis shows that GEN-2015-016 has a power factor range of 0.971 to 0.997 leading (absorbing) for the 2015 Summer Peak conditions, a power factor range of 0.968 to 0.996 leading (absorbing) for the 2015 Winter Peak conditions, and a power factor range of 0.975 to 0.997 leading (absorbing) for the 2025 Summer Peak conditions.

Study Generators GEN-2015-024 and GEN-2015-025 (Tap Wichita – Thistle circuit 1&2)

The Power Factor Analysis shows that the Wichita generation has a power factor range of 0.897 lagging (supplying) to 1.00 (unity) for the 2015 Summer Peak conditions, a power factor range of 0.655 to 0.883 lagging (supplying) for the 2015 Winter Peak conditions, and a power factor range of 0.911 lagging (supplying) to 0.999 leading (absorbing) for the 2025 Summer Peak conditions.

Study Generator GEN-2015-028

The Power Factor Analysis shows that GEN-2015-028 has a power factor range of 0.947 to 0.999 leading (supplying) for the 2015 Summer Peak conditions, a power factor range of 0.997 lagging (supplying) to 0.971 leading (absorbing) for the 2015 Winter Peak conditions, and a power factor range of 0.990 lagging (supplying) to 0.975 leading (absorbing) for the 2025 Summer Peak conditions.

Study Generator GEN-2015-030

The Power Factor Analysis shows that GEN-2015-030 has a power factor range of 0.902 to 0.998 lagging (supplying) for the 2015 Summer Peak conditions, a power factor range of 0.857

to 0.995 lagging (supplying) for the 2015 Winter Peak conditions, and a power factor range of 0/945 lagging (supplying) to 1.00 (unity) for the 2025 Summer Peak conditions.

SUMMARY OF LOW WIND/NO WIND ANALYSIS

The amount of reactive power injected into the transmission network was recorded at the point of interconnection for GEN-2015-001, GEN-2015-003, GEN-2015-024, GEN-2015-025, and GEN-2015-030 for each season. The maximum reactance needed for zero Mvar flow was 57.1 Mvar for GEN-2015-024 and GEN-2015-025 (Tap Wichita – Thistle circuit 1&2). The minimum reactance needed for zero Mvar flow was 9.8 Mvar for GEN-2015-030 (Sooner 345 kV).

Table of Contents

Section 1: Objectives 7
Section 2: Background 7
Section 3: Stability Analysis 33
3.1 Approach 33
3.2 Cluster Scenario Results 37
3.3 Stand Alone Scenario Result: GEN-2015-001 40
3.4 Stand Alone Scenario Result: GEN-2015-003 41
3.5 Stand Alone Scenario Result: GEN-2015-015 42
3.6 Stand Alone Scenario Result: GEN-2015-016 43
3.7 Stand Alone Scenario Result: GEN-2015-024 and GEN-2015-025 44
3.8 Stand Alone Scenario Result: GEN-2015-028 46
3.9 Stand Alone Scenario Result: GEN-2015-030 47
3.10 Stand Alone Scenario Result: ASGI-2015-028 49
Section 4: Short Circuit Analysis 50
4.1 Approach 50
4.2 Short Circuit Analysis Results 51
Section 5: Power Factor Analysis 58
5.1 Approach 59
5.2 Power Factor Analysis Results 60
Section 6: Low Wind/No Wind Analysis 77
6.1 Approach 77
6.2 Low Wind/No Wind Analysis Results 78
Section 7: Conclusions 78

SECTION 1: OBJECTIVES

The objective of this report is to provide Southwest Power Pool, Inc. (SPP) with the deliverables for the "DISIS-2015-001 (Group 8) Definitive Impact Study." SPP requested an Interconnection System Impact Study for nine (9) generation interconnections for 2015 Summer Peak, 2015 Winter Peak, and 2025 Summer Peak, which requires a Stability Analysis, Short Circuit Analysis, Power Factor Analysis, Low Wind/No Wind Analysis, and an Impact Study Report.

SECTION 2: BACKGROUND

The Siemens Power Technologies, Inc. PSS/E power system simulation program Version 32.2.0 was used for this study. SPP provided the stability database cases for 2015 Summer Peak, 2015 Winter Peak, and 2025 Summer Peak conditions and a list of contingencies to be examined. The model includes the study projects shown in Table 2-1 and the previously queued projects listed in Table 2-2. Refer to Appendix A for the steady-state and dynamic model data for the study projects. A power flow one-line diagram for each generation interconnection project is shown in Figures 2-1 through 2-8. Note that the one-line diagrams represent the 2015 Summer Peak case.

The Stability Analysis determined the impacts of the new interconnecting projects on the stability and voltage recovery of the nearby system and the ability of the interconnecting projects to meet FERC Order 661A. If problems with stability or voltage recovery are identified, the need for reactive compensation or system upgrades will be investigated. Three-phase faults and single line-to-ground faults will be examined as listed in Table 2-3. Note that all contingencies listed were examined for the cluster scenario, and specified contingencies (indicated by an X) were examined for each Stand Alone generator.

A Short Circuit Analysis was performed on the 2025 Summer Peak study year for each study generator in the Cluster Scenario. The study was performed five buses out from the study generator's point of interconnection and results were documented.

The Power Factor Analysis determined the power factor at the point of interconnection for the wind or solar interconnection projects for pre-contingency and post-contingency conditions. The N-1, three phase contingencies listed in Table 2-3 were used in the Power Factor analysis.

The Low Wind/No Wind Analysis was completed for wind or solar farm interconnections that interconnect to a 345 kV or 230 kV bus. This analysis determined if reactive support is needed to have an Mvar flow of approximately zero at the point of interconnection (POI).

Table 2-1
Interconnection Projects Evaluated

Request	Size (MW)	Generator Model	Point of Interconnection
GEN-2015-001	200	Vestas V110 2.0MW	Ranch Road 345kV
GEN-2015-003	200	Vestas V110 2.0MW	Renfrow 345kV
GEN-2015-015	154.6	Siemens 2.3MW with Power Boost (115kW => 2.415MW)	Tap Medford Tap – Coyote 138kV
GEN-2015-016	200	Vestas V110 2.0MW	Tap Centerville – Marmaton 161kV
GEN-2015-024	220	GE 2.0MW	Tap Wichita - Thistle 345kV circuit 1
GEN-2015-025	220	GE 2.0MW	Tap Wichita - Thistle 345kV circuit 2
GEN-2015-028	3.0 uprate to GEN-2009-025 for total 62.8MW	Siemens 2.3MW with Power Boost (115kW => 2.415MW)	Nardins 69kV
GEN-2015-030	200.1	GE 2.3MW	Sooner 345kV
ASGI-2015-004	54.300 Summer 56.364 Winter	GENSAL	Coffeyville Municipal Light & Power Northern Industrial Park Substation 69kV

Table 2-2
Previously Queued Nearby Interconnection Projects Included

Request	Size (MW)	Generator Model	Point of Interconnection
GEN-2002-004	199.5	GE.1.5MW	Latham 345kV (532800)
GEN-2005-013	199.8	Vestes V90 1.8MW	Caney River 345kV (532780)
GEN-2007-025	299.2	GE 1.6MW	Viola 345kV (532798)
GEN-2008-013	300	G.E. 1.68MW	Hunter 345kV (515476)
GEN-2008-021	1261 Summer 1283 Winter	GENROU	Wolf Creek 345kV (532797)
GEN-2008-098	100.8	Vestas V100 1.8MW	Tap on the Wolf Creek – LaCygne 345kV line (560004)
GEN-2009-025	59.8	Siemens 2.3MW	Tap on the Deerck – Sincblk 69KV line (515528)
GEN-2010-003	100.8	Vestas V100 1.8MW	Tap on the Wolf Creek – LaCygne 345kV line (560004)
GEN-2010-005	299.2	GE 1.6MW	Viola 345kV (532798)
ASGI-2010-006	150	GE1.5MW	Remington 138kV (301369)
GEN-2010-055	4.8	GENROU	Wekiwa 138kV (509757)
GEN-2011-057	150.4	GE 1.6MW	Creswell 138kV (532981)
GEN-2012-027	150.7	GE 1.62MW	Shidler 138kV (510403)
KCPL Distributed: Osawatomie	76	GENROU (543078)	Paola 161kV
GEN-2012-032	300	Vestas V112 3.0MW	Tap Rose Hill-Sooner 345kV (562318)
GEN-2012-033	98.8	GE 1.62MW	Tap Bunch Creek-South 4th 138kV(562303)
GEN-2012-040	76.5	GE 1.7MW	Chilocco 138kV (521198)
GEN-2012-041	85 Summer 121.5 Winter	GENROU	Tap Rose Hill-Sooner 345kV (562318)
GEN-2013-012	4 x 168.0MW Summer 4 x 215MW Winter	GENROU (514910) (514911) (514911) (514942)	Redbud 345kV (514909)
GEN-2013-028	516.4 Summer 559.5 Winter	GENROU (583743, 583746)	Tap on Tulsa N to GRDA1 345kV (562423)
GEN-2013-029	300	Vestas V100 VCSS 2MW (583753, 583756)	Renfrow 345kV(515543)
GEN-2014-001	200.6	GE 1.7MW 100m (583853,583856)	Tap Wichita to Emporia Energy Center 345kV (562476)

Table 2-2 (Continued)
Previously Queued Nearby Interconnection Projects Included

Request	Size (MW)	Generator Model	Point of Interconnection
GEN-2014-028	35 (Uprate) (Pgen=259W/2	GENROU	Riverton 161kV (547469)
GEN-2014-064	248.4	GE 2.3MW	Otter 138kV (514708)
ASGI-2014-014	56.4W/54.3S	GENROU	Ferguson 69kV (512664)

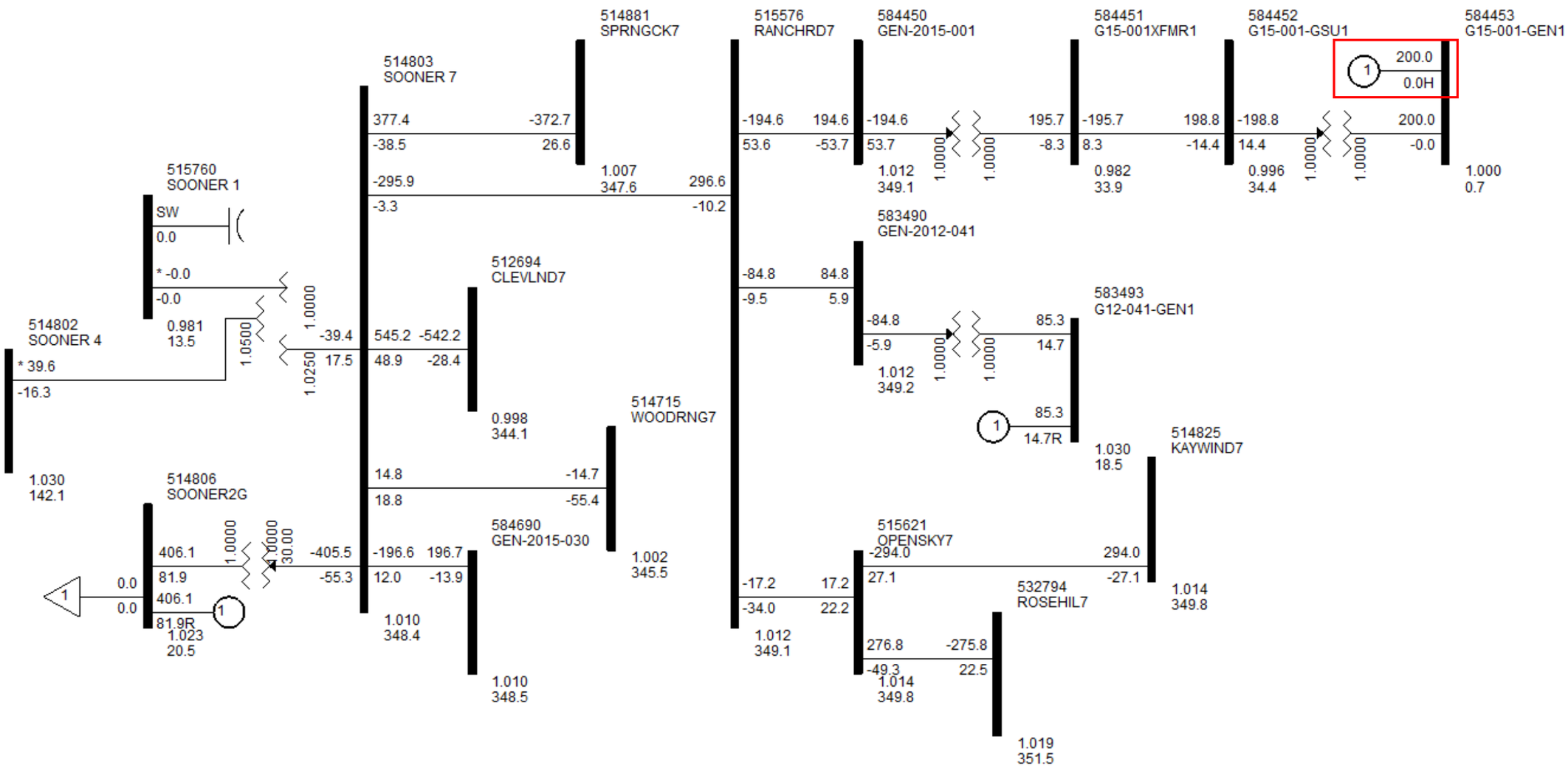

Figure 2-1. Power flow one-line diagram for interconnection project at the Ranch Road 345kV POI (GEN-2015-001)

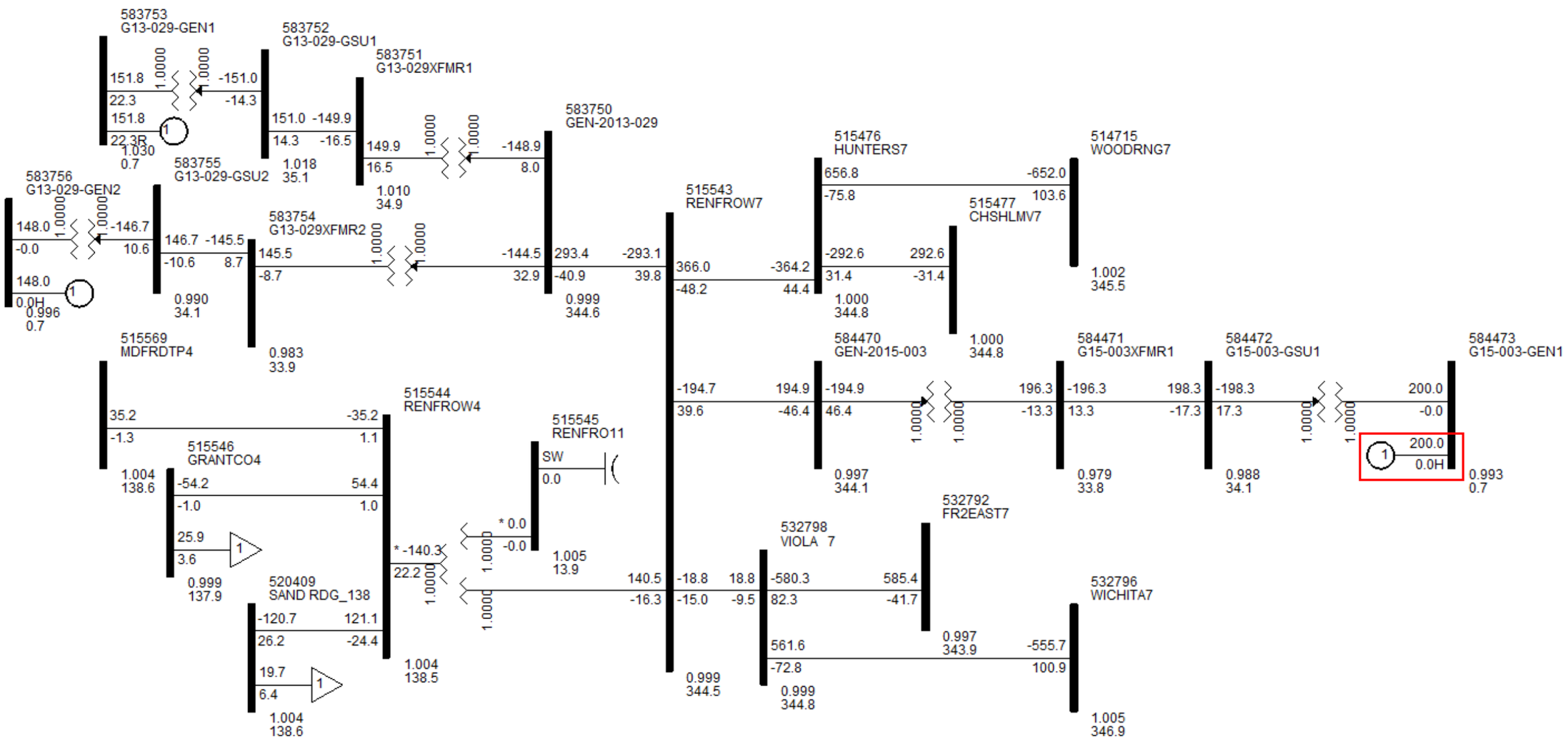

Figure 2-2. Power flow one-line diagram for interconnection project at the Renfrow 345kV POI (GEN-2015-003)

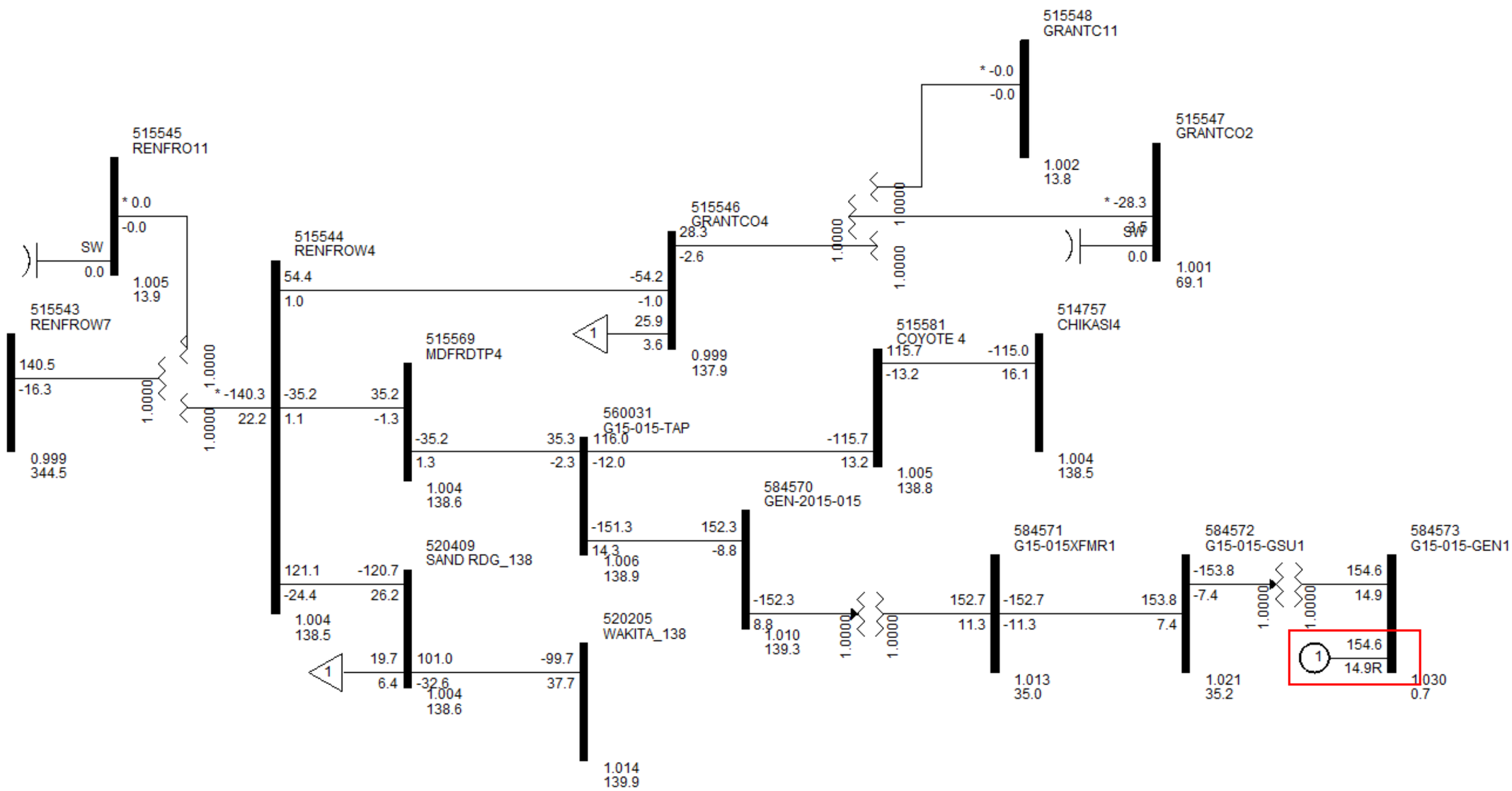

Figure 2-3. Power flow one-line diagram for interconnection project at the Tap Medford Tap POI (GEN-2015-015)

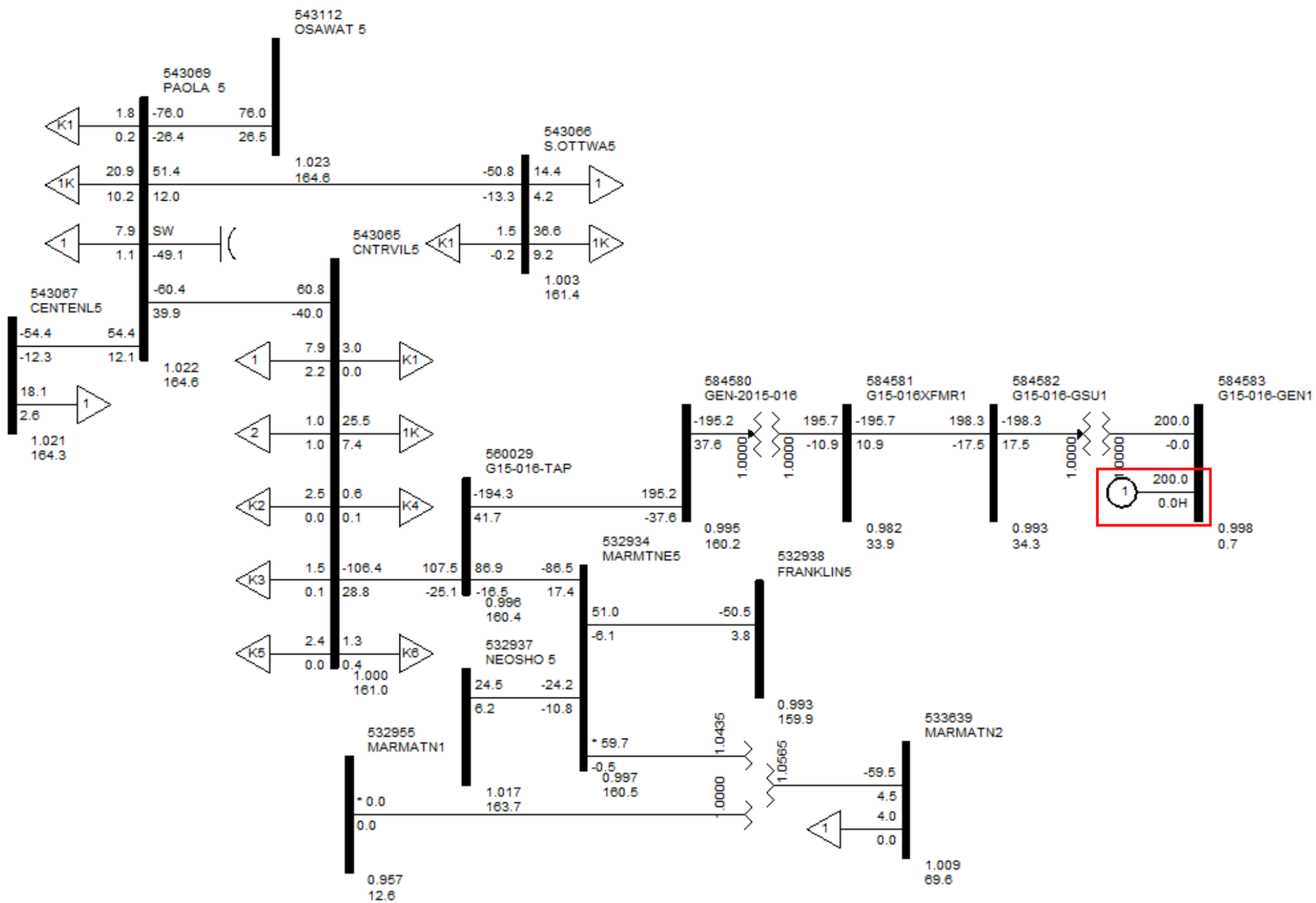

Figure 2-4. Power flow one-line diagram for interconnection project at the Tap Centerville POI (GEN-2015-016)

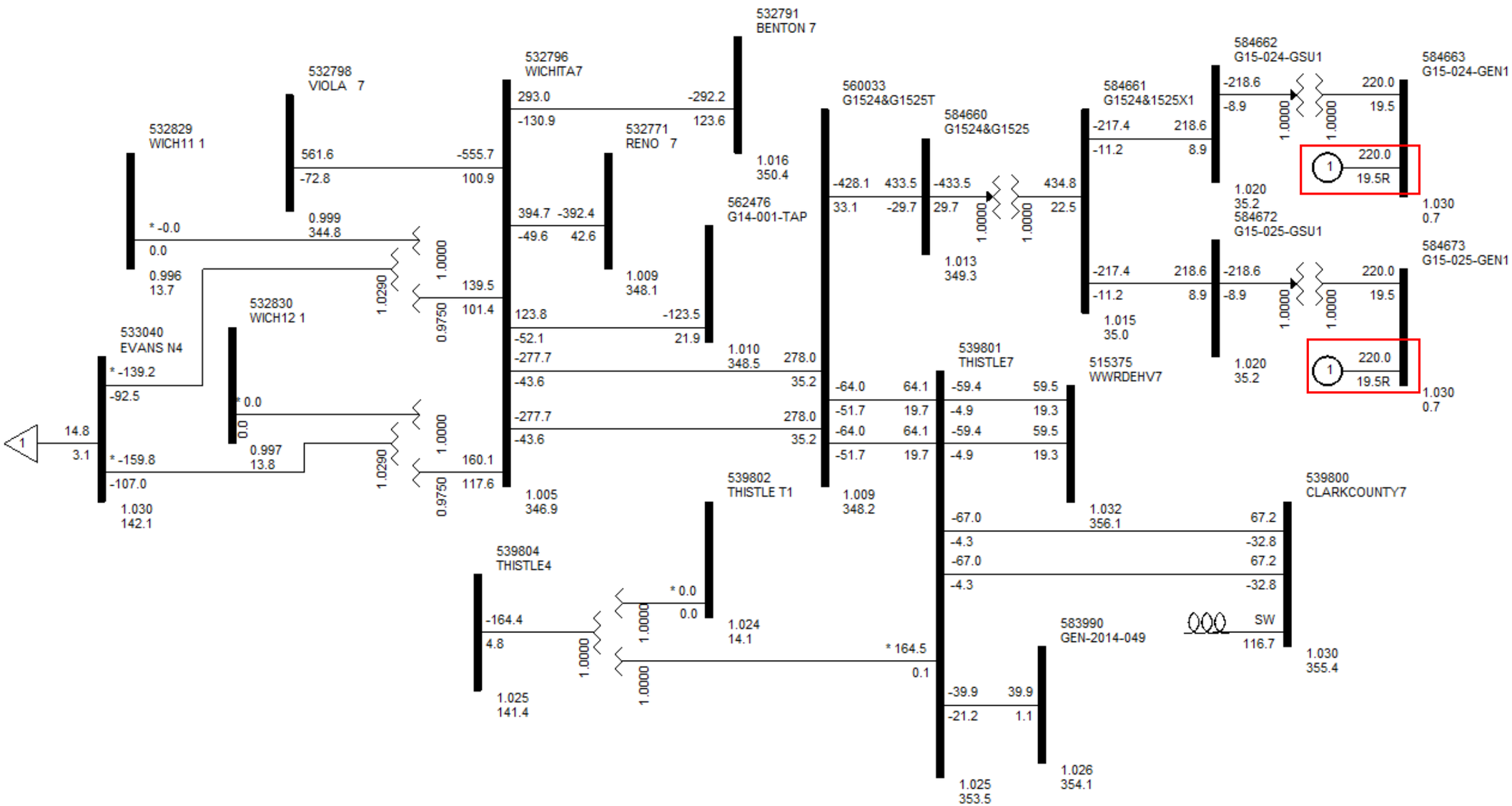

Figure 2-5. Power flow one-line diagram for interconnection project at the Tap Wichita – Thistle 345kV POI (GEN-2015-024, GEN-2015-025)

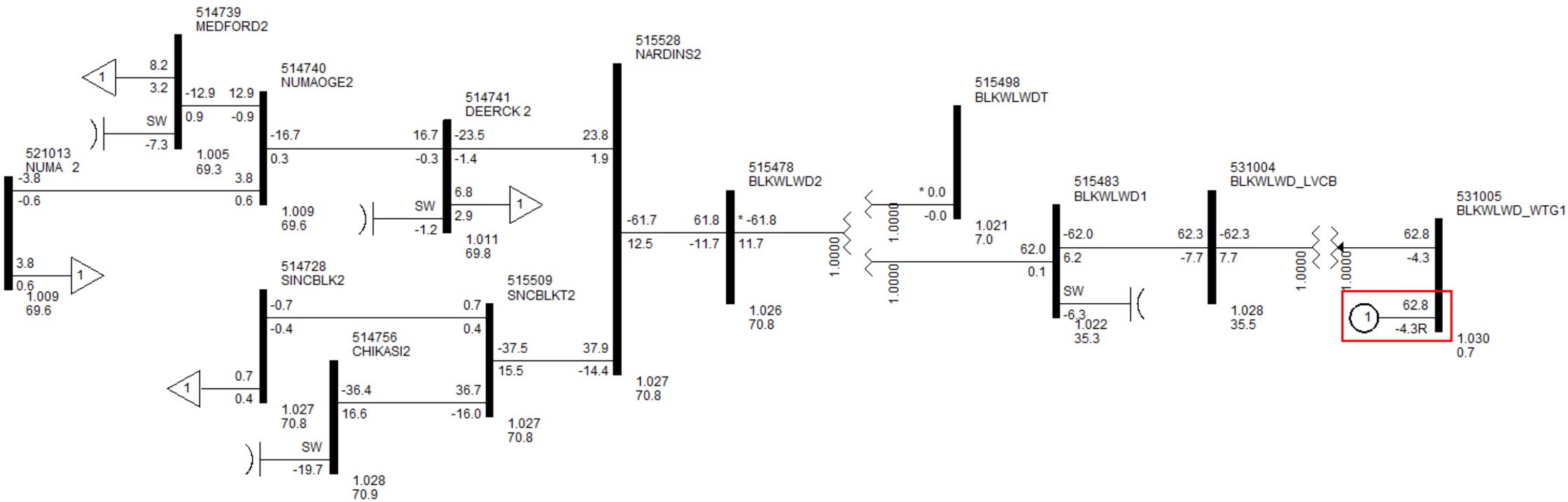

Figure 2-6. Power flow one-line diagram for interconnection project at the Nardins 69kV POI (GEN-2015-028)

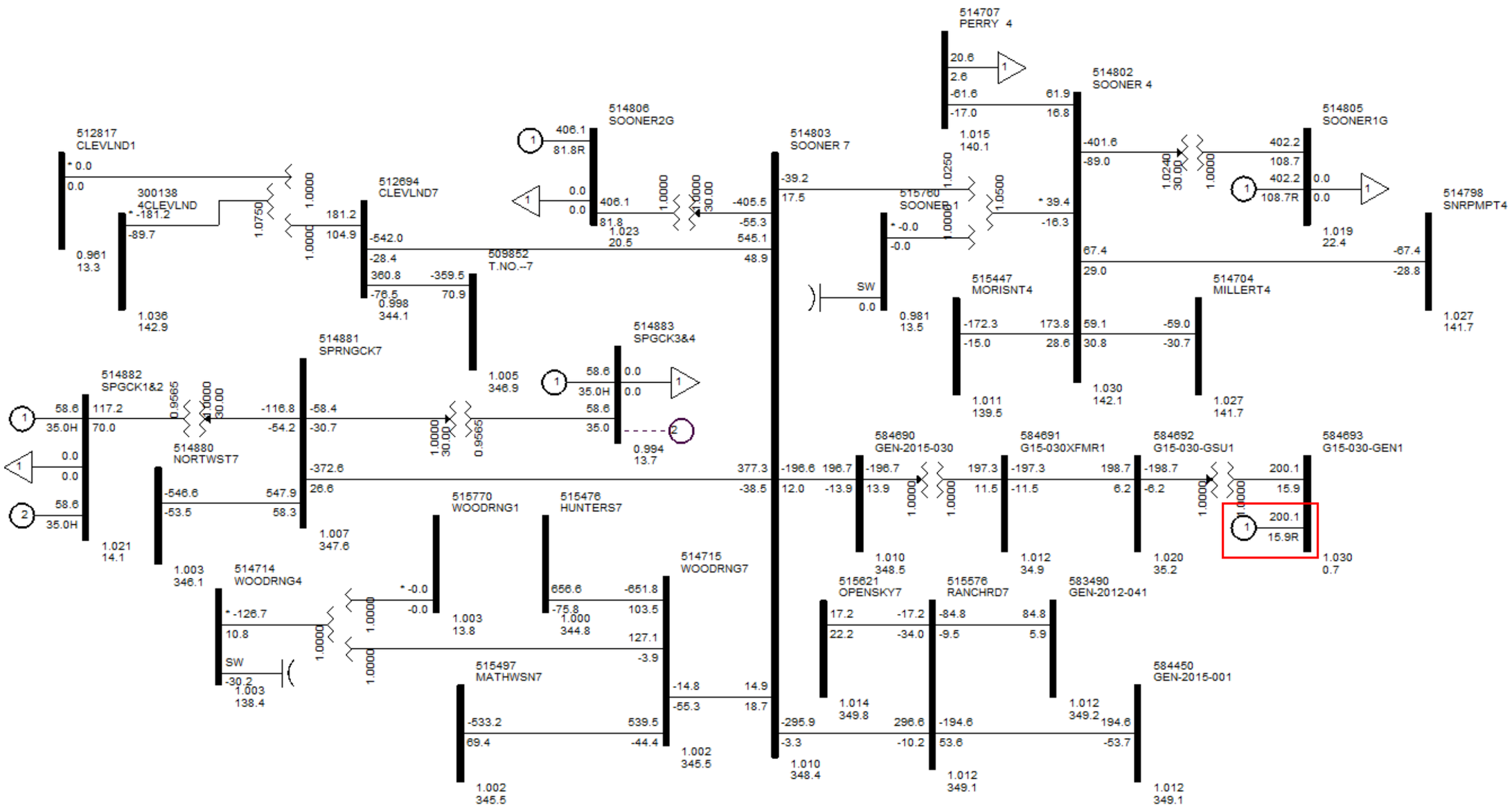

Figure 2-7. Power flow one-line diagram for interconnection project at the Sooner 345kV POI (GEN-2015-030)

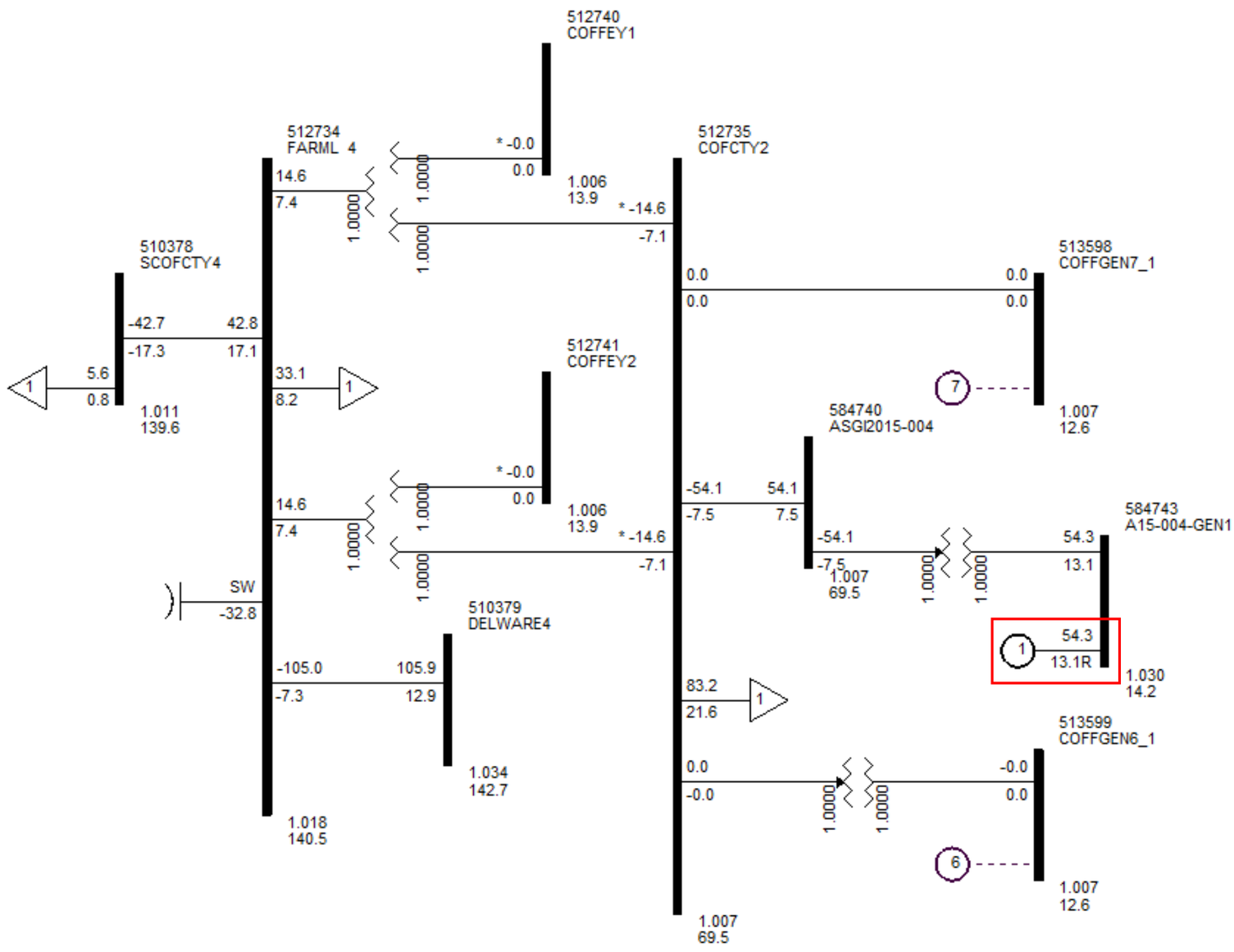

Figure 2-8. Power flow one-line diagram for interconnection project at the Coffeyville Municipal Light & Power Northern Industrial Park Substation 69kV POI (ASGI-2015-004)

Table 2-3
Case List with Contingency Description

Cont. No.	Cont. Name	Description	GEN-2015-001	GEN-2015-003	GEN-2015-015	GEN-2015-016	GEN-2015-024	GEN-2015-025	GEN-2015-028	GEN-2015-030	ASGI-2015-004
1	FLT01-3PH	**3 phase fault on the Open Sky (515621) to Ranch Road (515576) 345kV line, near Ranch Road.** a. Apply fault at the Ranch Road 345kV bus. b. Clear fault after 5 cycles by tripping the faulted line. c. Wait 20 cycles, and then re-close the line in (b) bac k into the fault. d. Leave fault on for 5 cycles, then trip the line in (b) and remove fault.	X							X	
2	FLT02-3PH	**3 phase fault on the Open Sky (515621) to Rosehill (532794) 345kV line, near Open Sky.** a. Apply fault at the Open Sky 345kV bus. b. Clear fault after 5 cycles by tripping the faulted line. c. Wait 20 cycles, and then re-close the line in (b) back into the fault. d. Leave fault on for 5 cycles, then trip the line in (b) and remove fault.	X		X		X			X	
3	FLT03-3PH	**3 phase fault on the Ranch Road (515576) to Sooner (514803) 345kV line, near Ranch Road.** a. Apply fault at the Ranch Road 345kV bus. b. Clear fault after 5 cycles by tripping the faulted line. c. Wait 20 cycles, and then re-close the line in (b) back into the fault. d. Leave fault on for 5 cycles, then trip the line in (b) and remove fault.	X		X		X	X	X	X	
4	FLT04-3PH	**3 phase fault on the Rosehill (532794) to Benton (532791) 345kV line, near Rosehill.** a. Apply fault at the Rosehill 345kV bus. b. Clear fault after 5 cycles by tripping the faulted line. c. Wait 20 cycles, and then re-close the line in (b) back into the fault. d. Leave fault on for 5 cycles, then trip the line in (b) and remove fault.	X				X				
5	FLT05-3PH	**3 phase fault on the Rosehill (532794) to Wolf Creek (532797) 345kV line, near Rosehill.** a. Apply fault at the Rosehill 345kV bus. b. Clear fault after 5 cycles by tripping the faulted line. c. Wait 20 cycles, and then re-close the line in (b) back into the fault. d. Leave fault on for 5 cycles, then trip the line in (b) and remove fault.	X				X			X	
6	FLT06-3PH	**3 phase fault on the Rosehill (532794) to Latham (532800) 345kV line, near Rosehill.** a. Apply fault at the Rosehill 345kV bus. b. Clear fault after 5 cycles by tripping the faulted line. c. Wait 20 cycles, and then re-close the line in (b) back into the fault. d. Leave fault on for 5 cycles, then trip the line in (b) and remove fault.	X				X			X	
7	FLT07-3PH	**3 phase fault on the Sooner (514803) to Spring Creek (514881) 345kV line, near Sooner.** a. Apply fault at the Sooner 345kV bus. b. Clear fault after 5 cycles by tripping the faulted line. c. Wait 20 cycles, and then re-close the line in (b) back into the fault. d. Leave fault on for 5 cycles, then trip the line in (b) and remove fault.	X		X					X	

Table 2-3 (Continued)
Case List with Contingency Description

Cont. No.	Cont. Name	Description	GEN-2015-001	GEN-2015-003	GEN-2015-015	GEN-2015-016	GEN-2015-024	GEN-2015-025	GEN-2015-028	GEN-2015-030	ASGI-2015-004
8	FLT08-3PH	**3 phase fault on the Sooner (514803) to Cleveland (512694) 345kV line, near Sooner.** a. Apply fault at the Sooner 345kV bus. b. Clear fault after 5 cycles by tripping the faulted line. c. Wait 20 cycles, and then re-close the line in (b) back into the fault. d. Leave fault on for 5 cycles, then trip the line in (b) and remove fault.	X		X					X	
9	FLT09-3PH	**3 phase fault on the Sooner (514803) to Woodring (514715) 345kV line, near Sooner.** a. Apply fault at the Sooner 345kV bus. b. Clear fault after 5 cycles by tripping the faulted line. c. Wait 20 cycles, and then re-close the line in (b) back into the fault. d. Leave fault on for 5 cycles, then trip the line in (b) and remove fault.	X		X		X			X	
10	FLT10-3PH	**3 phase fault on the Renfrow (515543) to Hunter (515476) 345kV line, near Renfrow.** a. Apply fault at the Renfrow 345kV bus. b. Clear fault after 5 cycles by tripping the faulted line. c. Wait 20 cycles, and then re-close the line in (b) back into the fault. d. Leave fault on for 5 cycles, then trip the line in (b) and remove fault.		X	X			X			
11	FLT11-3PH	**3 phase fault on the Renfrow (514880) to Viola (532798) 345kV line, near Renfrow.** a. Apply fault at the Renfrow 345kV bus. b. Clear fault after 5 cycles by tripping the faulted line. c. Wait 20 cycles, and then re-close the line in (b) back into the fault. d. Leave fault on for 5 cycles, then trip the line in (b) and remove fault.		X			X				
12	FLT12-3PH	**3 phase fault on the Viola (532798) to Wichita (532796) 345kV line, near Viola.** a. Apply fault at the Viola 345kV bus. b. Clear fault after 5 cycles by tripping the faulted line. c. Wait 20 cycles, and then re-close the line in (b) back into the fault. d. Leave fault on for 5 cycles, then trip the line in (b) and remove fault.	X	X			X			X	
13	FLT13-3PH	**3 phase fault on the Wichita (532796) to Benton (532791) 345kV line, near Wichita.** a. Apply fault at the Wichita 345kV bus. b. Clear fault after 5 cycles by tripping the faulted line. c. Wait 20 cycles, and then re-close the line in (b) back into the fault. d. Leave fault on for 5 cycles, then trip the line in (b) and remove fault.	X	X			X			X	
14	FLT14-3PH	**3 phase fault on the Wichita (532796) to G14-001 Tap (562476) 345kV line, near Wichita.** a. Apply fault at the Wichita 345kV bus. b. Clear fault after 5 cycles by tripping the faulted line. c. Wait 20 cycles, and then re-close the line in (b) back into the fault. d. Leave fault on for 5 cycles, then trip the line in (b) and remove fault.	X	X			X				
15	FLT15-3PH	**3 phase fault on the Emporia EC (532768) to G14-001 Tap (562476) 345kV line, near G14-001.** a. Apply fault at the G14-001 345kV bus. b. Clear fault after 5 cycles by tripping the faulted line. c. Wait 20 cycles, and then re-close the line in (b) back into the fault. d. Leave fault on for 5 cycles, then trip the line in (b) and remove fault.		X			X				

Table 2-3 (Continued)
Case List with Contingency Description

Cont. No.	Cont. Name	Description	GEN-2015-001	GEN-2015-003	GEN-2015-015	GEN-2015-016	GEN-2015-024	GEN-2015-025	GEN-2015-028	GEN-2015-030	ASGI-2015-004
16	FLT16-3PH	**3 phase fault on the Wichita (532796) to G1524&G1525T (560033) 345kV line circuit 1, near Wichita.** a. Apply fault at the Wichita 345kV bus. b. Clear fault after 5 cycles by tripping the faulted line.		X			X				
17	FLT17-3PH 2025 Summer Only	**3 phase fault on the Viola (532798) 345/(533075) 138/(532832) 13.8kV transformer, near Viola 345.** a. Apply fault at the Viola 345kV bus. b. Clear fault after 5 cycles by tripping the faulted line.		X			X				
18	FLT18-3PH	**3 phase fault on the Renfrow (515543) 345/(515544) 138/(515545) 13.8kV transformer, near Renfrow 345.** a. Apply fault at the Renfrow 345kV bus. b. Clear fault after 5 cycles by tripping the faulted line.		X			X	X			
19	FLT19-3PH	**3 phase fault on the G15-015 Tap (560031) to Medford Tap (515569) 138kV line, near G15-015.** a. Apply fault at the G15-015 138kV bus. b. Clear fault after 5 cycles by tripping the faulted line. c. Wait 20 cycles, and then re-close the line in (b) back into the fault. d. Leave fault on for 5 cycles, then trip the line in (b) and remove fault.			X			X			
20	FLT20-3PH	**3 phase fault on the G15-015 Tap (560031) to Coyote (515581) 138kV line, near G15-015.** a. Apply fault at the G15-015 138kV bus. b. Clear fault after 5 cycles by tripping the faulted line. c. Wait 20 cycles, and then re-close the line in (b) back into the fault. d. Leave fault on for 5 cycles, then trip the line in (b) and remove fault.			X			X			
21	FLT21-3PH	**3 phase fault on the Kildare (514760) to NewkirkAT (514764) 138kV circuit 1 line, near Stateline.** a. Apply fault at the Kildare 138kV bus. b. Clear fault after 5 cycles by tripping the faulted line. c. Wait 20 cycles, and then re-close the line in (b) back into the fault. d. Leave fault on for 5 cycles, then trip the line in (b) and remove fault.			X			X			
22	FLT22-3PH	**3 phase fault on the Kildare (514760) to White Eagle (514761) 138kV circuit 1 line, near Stateline.** a. Apply fault at the Kildare 138kV bus. b. Clear fault after 5 cycles by tripping the faulted line. c. Wait 20 cycles, and then re-close the line in (b) back into the fault. d. Leave fault on for 5 cycles, then trip the line in (b) and remove fault.			X			X			
23	FLT23-3PH	**3 phase fault on the Renfrow (515544) to Sand Ridge (520409) 138kV circuit 1 line, near Renfrow.** a. Apply fault at the Renfrow 138kV bus. b. Clear fault after 5 cycles by tripping the faulted line. c. Wait 20 cycles, and then re-close the line in (b) back into the fault. d. Leave fault on for 5 cycles, then trip the line in (b) and remove fault.			X			X			
24	FLT24-3PH	**3 phase fault on the G15-016 Tap (560029) to Marmaton (532934) 161kV circuit 1 line, near G15-016.** a. Apply fault at the G15-016 138kV bus. b. Clear fault after 5 cycles by tripping the faulted line. c. Wait 20 cycles, and then re-close the line in (b) back into the fault. d. Leave fault on for 5 cycles, then trip the line in (b) and remove fault.				X					

Table 2-3 (Continued)
Case List with Contingency Description

Cont. No.	Cont. Name	Description	GEN-2015-001	GEN-2015-003	GEN-2015-015	GEN-2015-016	GEN-2015-024	GEN-2015-025	GEN-2015-028	GEN-2015-030	ASGI-2015-004
25	FLT25-3PH	**3 phase fault on the G15-016 Tap (560029) to Centerville (543065) 161kV circuit 1 line, near G15-016.** a. Apply fault at the G15-016 138kV bus. b. Clear fault after 5 cycles by tripping the faulted line. c. Wait 20 cycles, and then re-close the line in (b) back into the fault. d. Leave fault on for 5 cycles, then trip the line in (b) and remove fault.				X					
26	FLT26-3PH	**3 phase fault on the Marmaton (532934) 161/(533639) 69/(532955) 13.2kV transformer, near Marmaton 161kV.** a. Apply fault at the Marmaton 161kV bus. b. Clear fault after 5 cycles by tripping the faulted line.				X					
27	FLT27-3PH	**3 phase fault on the Franklin (532938) to Litchfield (532932) 161kV circuit 1 line, near Franklin.** a. Apply fault at the Franklin 161kV bus. b. Clear fault after 5 cycles by tripping the faulted line. c. Wait 20 cycles, and then re-close the line in (b) back into the fault. d. Leave fault on for 5 cycles, then trip the line in (b) and remove fault.				X					
28	FLT28-3PH	**3 phase fault on the Franklin (532938) 161/(533876) 69/(533122) 13.2kV transformer, near Franklin 161kV.** a. Apply fault at the Franklin 161kV bus. b. Clear fault after 5 cycles by tripping the faulted line.				X					
29	FLT29-3PH	**3 phase fault on the Neosho (532937) to Marmaton (532934) 161kV circuit 1 line, near Neosho.** a. Apply fault at the Neosho 161kV bus. b. Clear fault after 5 cycles by tripping the faulted line. c. Wait 20 cycles, and then re-close the line in (b) back into the fault. d. Leave fault on for 5 cycles, then trip the line in (b) and remove fault.				X					
30	FLT30-3PH	**3 phase fault on the Neosho (532937) to Baker (532926) 161kV circuit 1 line, near Neosho.** a. Apply fault at the Neosho 161kV bus. b. Clear fault after 5 cycles by tripping the faulted line. c. Wait 20 cycles, and then re-close the line in (b) back into the fault. d. Leave fault on for 5 cycles, then trip the line in (b) and remove fault.				X					
31	FLT31-3PH	**3 phase fault on the Neosho (532793) to Lacygne (542981) 345kV circuit 1 line, near Neosho.** a. Apply fault at the Neosho 345kV bus. b. Clear fault after 5 cycles by tripping the faulted line. c. Wait 20 cycles, and then re-close the line in (b) back into the fault. d. Leave fault on for 5 cycles, then trip the line in (b) and remove fault.				X	X				
32	FLT32-3PH	**3 phase fault on the Centennial (543067) to Paola (543069) 161kV circuit 1 line, near Centerville.** a. Apply fault at the Centennial 161kV bus. b. Clear fault after 5 cycles by tripping the faulted line. c. Wait 20 cycles, and then re-close the line in (b) back into the fault. d. Leave fault on for 5 cycles, then trip the line in (b) and remove fault.				X					

Table 2-3 (Continued)
Case List with Contingency Description

Cont. No.	Cont. Name	Description	GEN-2015-001	GEN-2015-003	GEN-2015-015	GEN-2015-016	GEN-2015-024	GEN-2015-025	GEN-2015-028	GEN-2015-030	ASGI-2015-004
33	FLT33-3PH	**3 phase fault on the Reno (532771) to Wichita (532796) 345kV circuit 1 line, near Wichita.** a. Apply fault at the Wichita 345kV bus. b. Clear fault after 5 cycles by tripping the faulted line. c. Wait 20 cycles, and then re-close the line in (b) back into the fault. d. Leave fault on for 5 cycles, then trip the line in (b) and remove fault.		X			X				
34	FLT34-3PH	**3 phase fault on the Wichita (532796) 345/Evans (533040) 138/(532829) 13.8kV transformer circuit 1, near Wichita 345kV.** a. Apply fault at the Wichita 345kV bus. b. Clear fault after 5 cycles by tripping the faulted line.					X				
35	FLT35-3PH	**3 phase fault on the Lang (532769) to Emporia EC (532768) 345kV circuit 1 line, near Emporia EC.** a. Apply fault at the Emporia EC 345kV bus. b. Clear fault after 5 cycles by tripping the faulted line. c. Wait 20 cycles, and then re-close the line in (b) back into the fault. d. Leave fault on for 5 cycles, then trip the line in (b) and remove fault.					X				
36	FLT36-3PH	**3 phase fault on the Morris (532770) to Emporia EC (532768) 345kV circuit 1 line, near Emporia EC.** a. Apply fault at the Emporia EC 345kV bus. b. Clear fault after 5 cycles by tripping the faulted line. c. Wait 20 cycles, and then re-close the line in (b) back into the fault. d. Leave fault on for 5 cycles, then trip the line in (b) and remove fault.					X				
37	FLT37-3PH	**3 phase fault on the Swissvale (532774) to Emporia EC (532768) 345kV circuit 1 line, near Emporia EC.** a. Apply fault at the Emporia EC 345kV bus. b. Clear fault after 5 cycles by tripping the faulted line. c. Wait 20 cycles, and then re-close the line in (b) back into the fault. d. Leave fault on for 5 cycles, then trip the line in (b) and remove fault.					X				
38	FLT38-3PH	**3 phase fault on the Reno (532771) to Summit (532773) 345kV circuit 1 line, near Reno.** a. Apply fault at the Reno 345kV bus. b. Clear fault after 5 cycles by tripping the faulted line. c. Wait 20 cycles, and then re-close the line in (b) back into the fault. d. Leave fault on for 5 cycles, then trip the line in (b) and remove fault.					X				
39	FLT39-3PH	**3 phase fault on the Rosehill 345kV (532794) to Rosehill (533062) 138kV/(532831) 13.8kV transformer, near the 345kV bus.** a. Apply fault at the Rosehill 345kV bus. b. Clear fault after 5 cycles by tripping the faulted transformer.					X				
40	FLT40-3PH	**3 phase fault on the Nardins (515528) to Deer Creek (514741) 69kV circuit 1 line, near Nardins.** a. Apply fault at the Nardins 69kV bus. b. Clear fault after 6.5 cycles by tripping the faulted line. c. Wait 20 cycles, and then re-close the line in (b) back into the fault. d. Leave fault on for 6.5 cycles, then trip the line in (b) and remove fault.						X		

Table 2-3 (Continued)
Case List with Contingency Description

Cont. No.	Cont. Name	Description	GEN-2015-001	GEN-2015-003	GEN-2015-015	GEN-2015-016	GEN-2015-024	GEN-2015-025	GEN-2015-028	GEN-2015-030	ASGI-2015-004
41	FLT41-3PH	**3 phase fault on the Nardins (515528) to Sinclair Blackwell Tap (515509) 69kV circuit 1 line, near Nardins.** a. Apply fault at the Nardins 69kV bus. b. Clear fault after 6.5 cycles by tripping the faulted line. c. Wait 20 cycles, and then re-close the line in (b) back into the fault. d. Leave fault on for 6.5 cycles, then trip the line in (b) and remove fault.							X		
42	FLT42-3PH	**3 phase fault on the Grant Co (515547) to Clyde (514719) 69kV circuit 1 line, near Grant Co.** a. Apply fault at the Grant Co 69kV bus. b. Clear fault after 6.5 cycles by tripping the faulted line. c. Wait 20 cycles, and then re-close the line in (b) back into the fault. d. Leave fault on for 6.5 cycles, then trip the line in (b) and remove fault.							X		
43	FLT43-3PH	**3 phase fault on the Grant Co (515546) 138/ (515547) 69/ (515548) 13.8kV circuit 1 transformer, near Grant Co 69kV.** a. Apply fault at the Grant Co 69kV bus. b. Clear fault after 6.5 cycles by tripping the faulted line.							X		
44	FLT44-3PH	**3 phase fault on the Chikaskia (514756) to Blackwell (514755) 69kV circuit 1 line, near Chikaskia.** a. Apply fault at the Chikaskia 69kV bus. b. Clear fault after 6.5 cycles by tripping the faulted line. c. Wait 20 cycles, and then re-close the line in (b) back into the fault. d. Leave fault on for 6.5 cycles, then trip the line in (b) and remove fault.							X		
45	FLT45-3PH	**3 phase fault on the Chikaskia (514756) to Braman (514750) 69kV circuit 1 line, near Chikaskia.** a. Apply fault at the Chikaskia 69kV bus. b. Clear fault after 6.5 cycles by tripping the faulted line. c. Wait 20 cycles, and then re-close the line in (b) back into the fault. d. Leave fault on for 6.5 cycles, then trip the line in (b) and remove fault.							X		
46	FLT46-3PH	**3 phase fault on the Chikaskia (514757) 138/ (514756) 69/ (515713) 13.8kV circuit 1 transformer, near Chikaskia 69kV.** a. Apply fault at the Chikaskia 69kV bus. b. Clear fault after 6.5 cycles by tripping the faulted line.							X		
47	FLT47-3PH	**3 phase fault on the Woodring (514715) to Mathewson (515497) 345kV circuit 1 line, near Woodring.** a. Apply fault at the Woodring 345kV bus. b. Clear fault after 5 cycles by tripping the faulted line. c. Wait 20 cycles, and then re-close the line in (b) back into the fault. d. Leave fault on for 5 cycles, then trip the line in (b) and remove fault.								X	
48	FLT48-3PH	**3 phase fault on the Woodring (514715) 345/ (514714) 138/ (515770) 13.8kV circuit 1 transformer, near Woodring 345kV.** a. Apply fault at the Woodring 345kV bus. b. Clear fault after 5 cycles by tripping the faulted line.								X	
49	FLT49-3PH	**3 phase fault on the Sooner (514803) 345/ (514802) 138/ (515760) 13.8kV circuit 1 transformer, near Sooner 345kV.** a. Apply fault at the Sooner 345kV bus. b. Clear fault after 5 cycles by tripping the faulted line.								X	

Table 2-3 (Continued)
Case List with Contingency Description

Cont. No.	Cont. Name	Description	GEN-2015-001	GEN-2015-003	GEN-2015-015	GEN-2015-016	GEN-2015-024	GEN-2015-025	GEN-2015-028	GEN-2015-030	ASGI-2015-004
50	FLT50-3PH	**3 phase fault on the Coffeyville Farmland (512734) 138/ Coffeyville City (512735) 69/ (512740) 13.8kV circuit 1 transformer, near Coffeyville City 69kV.** a. Apply fault at the Coffeyville City 69kV bus. b. Clear fault after 5 cycles by tripping the faulted line.									X
51	FLT51-3PH	**3 phase fault on the Coffeyville Farmland (512734) to Delaware (510379) 138kV circuit 1 line, near Coffeyville Farmland.** a. Apply fault at the Coffeyville Farmland 138kV bus. b. Clear fault after 5 cycles by tripping the faulted line. c. Wait 20 cycles, and then re-close the line in (b) back into the fault. d. Leave fault on for 5 cycles, then trip the line in (b) and remove fault.									X
52	FLT52-3PH	**3 phase fault on the Coffeyville Farmland (512734) to South Coffeyville City (510378) 138kV circuit 1 line, near Coffeyville Farmland.** a. Apply fault at the Coffeyville Farmland 138kV bus. b. Clear fault after 5 cycles by tripping the faulted line. c. Wait 20 cycles, and then re-close the line in (b) back into the fault. d. Leave fault on for 5 cycles, then trip the line in (b) and remove fault.									X
53	FLT53-3PH	**3 phase fault on the South Coffeyville Tap (510422) to Dearing (533002) 138kV circuit 1 line, near South Coffeyville Tap.** a. Apply fault at the South Coffeyville Tap 138kV bus. b. Clear fault after 5 cycles by tripping the faulted line. c. Wait 20 cycles, and then re-close the line in (b) back into the fault. d. Leave fault on for 5 cycles, then trip the line in (b) and remove fault.									X
54	FLT54-3PH	**3 phase fault on the South Coffeyville Tap (510422) to North Bartlesville (510386) 138kV circuit 1 line, near South Coffeyville Tap.** a. Apply fault at the South Coffeyville Tap 138kV bus. b. Clear fault after 5 cycles by tripping the faulted line. c. Wait 20 cycles, and then re-close the line in (b) back into the fault. d. Leave fault on for 5 cycles, then trip the line in (b) and remove fault.									X
55	FLT55-3PH	**3 phase fault on the Dearing (533002) to Montgomery (533004) 138kV circuit 1 line, near Dearing.** a. Apply fault at the Dearing 138kV bus. b. Clear fault after 5 cycles by tripping the faulted line. c. Wait 20 cycles, and then re-close the line in (b) back into the fault. d. Leave fault on for 5 cycles, then trip the line in (b) and remove fault.									X
56	FLT56-3PH	**3 phase fault on the Delaware (510380) to NES (510406) 345kV circuit 1 line, near Delaware.** a. Apply fault at the Delaware 345kV bus. b. Clear fault after 5 cycles by tripping the faulted line. c. Wait 20 cycles, and then re-close the line in (b) back into the fault. d. Leave fault on for 5 cycles, then trip the line in (b) and remove fault.									X
57	FLT57-3PH	**3 phase fault on the Delaware (510380) to Neosho (532793) 345kV circuit 1 line, near Delaware.** a. Apply fault at the Delaware 345kV bus. b. Clear fault after 5 cycles by tripping the faulted line. c. Wait 20 cycles, and then re-close the line in (b) back into the fault. d. Leave fault on for 5 cycles, then trip the line in (b) and remove fault.									X

Table 2-3 (Continued)
Case List with Contingency Description

Cont. No.	Cont. Name	Description	GEN-2015-001	GEN-2015-003	GEN-2015-015	GEN-2015-016	GEN-2015-024	GEN-2015-025	GEN-2015-028	GEN-2015-030	ASGI-2015-004
58	FLT58-3PH	**Prior outage on the Sooner (514803) – Cleveland (512694) 345kV line** 3 phase fault on the Sooner (514803) to Woodring (514715) 345kV line, near Sooner. a. Apply fault at the Sooner 345kV bus. b. Clear fault after 5 cycles by tripping the faulted line. c. Wait 20 cycles, and then re-close the line in (b) back into the fault. d. Leave fault on for 5 cycles, then trip the line in (b) and remove fault.	X							X	
59	FLT59-3PH	**Prior outage on the Sooner (514803) – Spring Creek (514881) 345kV line** 3 phase fault on the Sooner (514803) to Woodring (514715) 345kV line, near Sooner. **a. Apply fault at the Sooner 345kV bus.** b. Clear fault after 5 cycles by tripping the faulted line. c. Wait 20 cycles, and then re-close the line in (b) back into the fault. d. Leave fault on for 5 cycles, then trip the line in (b) and remove fault.	X							X	
60	FLT60-3PH	**Prior outage on the Rosehill (532794) – Wolf Creek (532797) 345kV line** **3 phase fault on the Rosehill (532794) to Benton (532791) 345kV line, near Rosehill.** a. Apply fault at the Rosehill 345kV bus. b. Clear fault after 5 cycles by tripping the faulted line. c. Wait 20 cycles, and then re-close the line in (b) back into the fault. d. Leave fault on for 5 cycles, then trip the line in (b) and remove fault.	X				X			X	
61	FLT61-3PH	**Prior outage on the Caney River (532780) – Neosho (532793) 345kV line** **3 phase fault on the Rosehill (532794) to Benton (532791) 345kV line, near Caney River.** a. Apply fault at the Rosehill 345kV bus. b. Clear fault after 5 cycles by tripping the faulted line. c. Wait 20 cycles, and then re-close the line in (b) back into the fault. d. Leave fault on for 5 cycles, then trip the line in (b) and remove fault.	X				X			X	
62	FLT62-3PH	**Prior outage on the Caney River (532780) – Neosho (532793) 345kV line** **3 phase fault on the Wichita (532796) to Benton (532791) 345kV line, near Wichita.** a. Apply fault at the Wichita 345kV bus. b. Clear fault after 5 cycles by tripping the faulted line. c. Wait 20 cycles, and then re-close the line in (b) back into the fault. d. Leave fault on for 5 cycles, then trip the line in (b) and remove fault.	X	X			X			X	
63	FLT63-3PH	**Prior outage on the Renfrow (515543) 345/ (515544) 138/ (515545) 13.8kV transformer** **3 phase fault on the Renfrow (515543) to Viola (532798) 345kV line, near Renfrow.** a. Apply fault at the Renfrow 345kV bus. b. Clear fault after 5 cycles by tripping the faulted line. c. Wait 20 cycles, and then re-close the line in (b) back into the fault. d. Leave fault on for 5 cycles, then trip the line in (b) and remove fault.		X			X				

Table 2-3 (Continued)
Case List with Contingency Description

Cont. No.	Cont. Name	Description	GEN-2015-001	GEN-2015-003	GEN-2015-015	GEN-2015-016	GEN-2015-024	GEN-2015-025	GEN-2015-028	GEN-2015-030	ASGI-2015-004
64	FLT64-3PH	**Prior outage on the Renfrow (515543) 345/ (515544) 138/ (515545) 13.8kV transformer** **3 phase fault on the Renfrow (515543) to Hunter (515476) 345kV line, near Renfrow.** a. Apply fault at the Renfrow 345kV bus. b. Clear fault after 5 cycles by tripping the faulted line. c. Wait 20 cycles, and then re-close the line in (b) back into the fault. d. Leave fault on for 5 cycles, then trip the line in (b) and remove fault.		X	X		X				
65	FLT65-3PH	**Prior outage on the Renfrow (515543) 345/ (515544) 138/ (515545) 13.8kV transformer** **3 phase fault on the Viola (532798) to Wichita (532796) 345kV line, near Viola.** a. Apply fault at the Viola 345kV bus. b. Clear fault after 5 cycles by tripping the faulted line. c. Wait 20 cycles, and then re-close the line in (b) back into the fault. d. Leave fault on for 5 cycles, then trip the line in (b) and remove fault.		X			X				
66	FLT66-3PH	**Prior outage on the Wichita (532796) – Benton (532791) 345kV line** **3 phase fault on the Hunter (515476) to Woodring (514715) 345kV line, near Hunter.** a. Apply fault at the Hunter 345kV bus. b. Clear fault after 5 cycles by tripping the faulted line. c. Wait 20 cycles, and then re-close the line in (b) back into the fault. d. Leave fault on for 5 cycles, then trip the line in (b) and remove fault.		X	X		X		X		
67	FLT67-3PH	**Prior outage on the Renfrow (515544) – Sand Ridge (520409) 138kV line** **3 phase fault on the Renfrow (515544) to Grant Co (515546) 138kV line, near Renfrow.** a. Apply fault at the Renfrow 138kV bus. b. Clear fault after 5 cycles by tripping the faulted line. c. Wait 20 cycles, and then re-close the line in (b) back into the fault. d. Leave fault on for 5 cycles, then trip the line in (b) and remove fault.			X				X		
68	FLT68-3PH	**Prior outage on the Chikaskia (514757) 138/ (514756) 69/ (515713) 13.2kV transformer** **3 phase fault on the Kildare (514760) to Chikaskia (514757) 138kV line, near Chikaskia.** a. Apply fault at the Chikaskia 138kV bus. b. Clear fault after 5 cycles by tripping the faulted line. c. Wait 20 cycles, and then re-close the line in (b) back into the fault. d. Leave fault on for 5 cycles, then trip the line in (b) and remove fault.			X				X		
69	FLT69-3PH	**Prior outage on the Marmaton (532934) 161/ (533639) 69/ (532955) 13.2kV transformer** **3 phase fault on the Marmaton (532934) to Franklin (532938) 161kV line, near Marmaton.** a. Apply fault at the Marmaton 161kV bus. b. Clear fault after 5 cycles by tripping the faulted line. c. Wait 20 cycles, and then re-close the line in (b) back into the fault. d. Leave fault on for 5 cycles, then trip the line in (b) and remove fault.				X					

Table 2-3 (Continued)
Case List with Contingency Description

Cont. No.	Cont. Name	Description	GEN-2015-001	GEN-2015-003	GEN-2015-015	GEN-2015-016	GEN-2015-024	GEN-2015-025	GEN-2015-028	GEN-2015-030	ASGI-2015-004
70	FLT70-3PH	**Prior outage on the Marmaton (532934) 161/ (533639) 69/ (532955) 13.2kV transformer** **3 phase fault on the Marmaton (532934) to Neosho (532937) 161kV line, near Marmaton.** a. Apply fault at the Marmaton 161kV bus. b. Clear fault after 5 cycles by tripping the faulted line. c. Wait 20 cycles, and then re-close the line in (b) back into the fault. d. Leave fault on for 5 cycles, then trip the line in (b) and remove fault.				X					
71	FLT71-3PH	**Prior outage on the S Ottawa (543066) – SE Ottawa (543055) 161kV line** **3 phase fault on the Paola (543069) to Centennial (543067) 161kV line, near Paola.** a. Apply fault at the Paola 161kV bus. b. Clear fault after 5 cycles by tripping the faulted line. c. Wait 20 cycles, and then re-close the line in (b) back into the fault. d. Leave fault on for 5 cycles, then trip the line in (b) and remove fault.				X					
72	FLT72-3PH	**Prior outage on the Neosho (532937) – Baker (532926) 161kV line** **3 phase fault on the Neosho (532937) to Riverton (547469) 161kV line, near Neosho.** a. Apply fault at the Neosho 161kV bus. b. Clear fault after 5 cycles by tripping the faulted line. c. Wait 20 cycles, and then re-close the line in (b) back into the fault. d. Leave fault on for 5 cycles, then trip the line in (b) and remove fault.				X					
73	FLT73-3PH	**Prior outage on the Wichita (532796) – Benton (532791) 345kV line** **3 phase fault on the G14-01 Tap (562476) to Emporia EC (532768) 345kV line, near G14-01.** a. Apply fault at the G14-01 345kV bus. b. Clear fault after 5 cycles by tripping the faulted line. c. Wait 20 cycles, and then re-close the line in (b) back into the fault. d. Leave fault on for 5 cycles, then trip the line in (b) and remove fault.		X			X				
74	FLT74-3PH	**Prior outage on the Wichita (532796) – Benton (532791) 345kV line** **3 phase fault on the Wichita (532796) to Viola (532798) 345kV line, near Wichita.** a. Apply fault at the Wichita 345kV bus. b. Clear fault after 5 cycles by tripping the faulted line. c. Wait 20 cycles, and then re-close the line in (b) back into the fault. d. Leave fault on for 5 cycles, then trip the line in (b) and remove fault.		X			X				
75	FLT75-3PH	**Prior outage on the Wichita (532796) – G1524&G1525T (560033) 345kV circuit 1 line** **3 phase fault on the Wichita (532796) to G1524&G1525T (560033) 345kV circuit 2 line, near Wichita.** a. Apply fault at the Wichita 345kV bus. b. Clear fault after 5 cycles by tripping the faulted line.		X			X				

Table 2-3 (Continued)
Case List with Contingency Description

Cont. No.	Cont. Name	Description	GEN-2015-001	GEN-2015-003	GEN-2015-015	GEN-2015-016	GEN-2015-024	GEN-2015-025	GEN-2015-028	GEN-2015-030	ASGI-2015-004
76	FLT76-3PH	**Prior outage on the Viola (532798) – Renfrow (515543) 345kV line** **3 phase fault on the Rosehill (532794) to Open Sky (515621) 345kV line, near Rosehill.** a. Apply fault at the Rosehill 345kV bus. b. Clear fault after 5 cycles by tripping the faulted line. c. Wait 20 cycles, and then re-close the line in (b) back into the fault. d. Leave fault on for 5 cycles, then trip the line in (b) and remove fault.	X	X			X		X		
77	FLT77-3PH	**Prior Outage on the Chikaskia (514757) 138/ (514756) 69/ (515713) 13.2kV transformer** **3 phase fault on the Chikaskia (514756) to Blackwell (514755) 69kV line, near Chikaskia.** a. Apply fault at the Chikaskia 69kV bus. b. Clear fault after 5 cycles by tripping the faulted line. c. Wait 20 cycles, and then re-close the line in (b) back into the fault. d. Leave fault on for 5 cycles, then trip the line in (b) and remove fault.						X			
78	FLT78-3PH	**Prior Outage on the Grant Co (515546) 138/ (515547) 69/ (515548) 13.8kV transformer** **3 phase fault on the Grant Co (515547) to Clyde (514719) 69kV line, near Grant Co.** a. Apply fault at the Grant Co 69kV bus. b. Clear fault after 5 cycles by tripping the faulted line. c. Wait 20 cycles, and then re-close the line in (b) back into the fault. d. Leave fault on for 5 cycles, then trip the line in (b) and remove fault.						X			
79	FLT79-3PH	**Prior outage on the Woodring (514715) – Hunters (515476) 345kV line** **3 phase fault on the Woodring (514715) to Sooner (514803) 345kV line, near Woodring.** a. Apply fault at the Woodring 345kV bus. b. Clear fault after 5 cycles by tripping the faulted line. c. Wait 20 cycles, and then re-close the line in (b) back into the fault. d. Leave fault on for 5 cycles, then trip the line in (b) and remove fault.	X							X	
80	FLT80-3PH	**Prior outage on the Sooner (514803) – Cleveland (512694) 345kV line** **3 phase fault on the Sooner (514803) to Spring Creek (514881) 345kV line, near Sooner.** a. Apply fault at the Sooner 345kV bus. b. Clear fault after 5 cycles by tripping the faulted line. c. Wait 20 cycles, and then re-close the line in (b) back into the fault. d. Leave fault on for 5 cycles, then trip the line in (b) and remove fault.	X							X	
81	FLT81-3PH	**Prior outage on the Sooner (514803) – Cleveland (512694) 345kV line** **3 phase fault on the Sooner (514803) to Ranch Road (515576) 345kV line, near Sooner.** a. Apply fault at the Sooner 345kV bus. b. Clear fault after 5 cycles by tripping the faulted line. c. Wait 20 cycles, and then re-close the line in (b) back into the fault. d. Leave fault on for 5 cycles, then trip the line in (b) and remove fault.								X	

Table 2-3 (Continued)
Case List with Contingency Description

Cont. No.	Cont. Name	Description	GEN-2015-001	GEN-2015-003	GEN-2015-015	GEN-2015-016	GEN-2015-024	GEN-2015-025	GEN-2015-028	GEN-2015-030	ASGI-2015-004
82	FLT82-3PH	**Prior outage on the Sooner (514803) – Woodring (514715) 345kV line** **3 phase fault on the Sooner (514803) to Spring Creek (514881) 345kV line, near Sooner.** a. Apply fault at the Sooner 345kV bus. b. Clear fault after 5 cycles by tripping the faulted line. c. Wait 20 cycles, and then re-close the line in (b) back into the fault. d. Leave fault on for 5 cycles, then trip the line in (b) and remove fault.	X							X	
83	FLT83-3PH	**Prior outage on the Coffeyville Farmland (512734) 138/ Coffeyville City (512735) 69/ (512740) 13.8kV circuit 1 transformer, near Coffeyville City 69kV.** **3 phase fault on the Coffeyville Farmland (512734) to South Coffeyville City (510378) 138kV line, near Coffeyville Farmland.** a. Apply fault at the Coffeyville Farmland 138kV bus. b. Clear fault after 5 cycles by tripping the faulted line. c. Wait 20 cycles, and then re-close the line in (b) back into the fault. d. Leave fault on for 5 cycles, then trip the line in (b) and remove fault.									X
84	FLT84-3PH	**Prior outage on the Coffeyville Farmland (512734) 138/ Coffeyville City (512735) 69/ (512740) 13.8kV circuit 1 transformer, near Coffeyville City 69kV.** **3 phase fault on the Coffeyville Farmland (512734) to Delaware (510379) 138kV line, near Coffeyville Farmland.** a. Apply fault at the Coffeyville Farmland 138kV bus. b. Clear fault after 5 cycles by tripping the faulted line. c. Wait 20 cycles, and then re-close the line in (b) back into the fault. d. Leave fault on for 5 cycles, then trip the line in (b) and remove fault.									X
85	FLT85-1PH	**Stuck Breaker on Riverton – Neosho 161kv line** a. Apply single-phase fault at Riverton (547469) 161kV bus on the Riverton – Neosho 161kV line b. After 20 cycles, trip the Riverton (547469) 161/69 (547541)/12.5 (547725) kV transformer c. Trip the Riverton (547469) to Neosho (532937) line, and remove the fault									
86	FLT86-1PH	**Ranch Road 345kV Single Phase Fault** a. Apply single-phase fault on the Ranch Road (515576) – Open Sky (515621) 345kV line, near Ranch Road. b. Clear fault after 5 cycles by tripping the line in (a). c. Wait 20 cycles, and then re-close the line in (a) back into the fault. d. Leave fault on for 5 cycles, then trip the line in (a) and remove fault.	X								
87	FLT87-1PH	**Ranch Road 345kV Single Phase Fault** a. Apply single-phase fault on the Ranch Road (515576) – Sooner (514803) 345kV line, near Ranch Road. b. Clear fault after 5 cycles by tripping the line in (a). c. Wait 20 cycles, and then re-close the line in (a) back into the fault. d. Leave fault on for 5 cycles, then trip the line in (a) and remove fault.	X								

Table 2-3 (Continued)
Case List with Contingency Description

Cont. No.	Cont. Name	Description	GEN-2015-001	GEN-2015-003	GEN-2015-015	GEN-2015-016	GEN-2015-024	GEN-2015-025	GEN-2015-028	GEN-2015-030	ASGI-2015-004
88	FLT88-1PH	**Stuck Breaker on Renfrow – Viola 345kV circuit 1 line** a. Apply single-phase fault at Renfrow (515543) on the 345kV bus. b. After 20 cycles, trip the Renfrow 345/ (515544) 138/(515545) 13.8kV transformer c. Trip the Renfrow – Viola (532798) 345 kV circuit 1 line, and remove the fault		X							
89	FLT89-1PH	**Stuck Breaker on Renfrow – Hunter 345kV circuit 1 line** a. Apply single-phase fault at Renfrow (515543) on the 345kV bus. b. After 20 cycles, trip the Renfrow 345/ (515544) 138/(515545) 13.8kV transformer c. Trip the Renfrow – Hunter (515476) 345 kV circuit 1 line, and remove the fault		X							
90	FLT90-1PH	**G15-015 Tap 138kV Single Phase Fault** a. Apply single-phase fault on the G15-015 Tap (560031) – Coyote (515581) 138kV line, near G15-015 Tap. b. Clear fault after 6.5 cycles by tripping the line in (a). c. Wait 20 cycles, and then re-close the line in (a) back into the fault. d. Leave fault on for 6.5 cycles, then trip the line in (a) and remove fault.			X						
91	FLT91-1PH	**G15-015 Tap 138kV Single Phase Fault** a. Apply single-phase fault on the G15-015 Tap (560031) – Medford Tap (515569) 138kV line, near G15-015 Tap. b. Clear fault after 6.5 cycles by tripping the line in (a). c. Wait 20 cycles, and then re-close the line in (a) back into the fault. d. Leave fault on for 6.5 cycles, then trip the line in (a) and remove fault.			X						
92	FLT92-1PH	**G15-016 Tap 161kV Single Phase Fault** a. Apply single-phase fault on the G15-016 Tap (560029) – Centerville (543065) 161kV line, near G15-016 Tap. b. Clear fault after 6.5 cycles by tripping the line in (a). c. Wait 20 cycles, and then re-close the line in (a) back into the fault. d. Leave fault on for 6.5 cycles, then trip the line in (a) and remove fault.				X					
93	FLT93-1PH	**G15-016 Tap 161kV Single Phase Fault** a. Apply single-phase fault on the G15-016 Tap (560029) – Marmaton (532934) line, near G15-016 Tap. b. Clear fault after 6.5 cycles by tripping the line in (a). c. Wait 20 cycles, and then re-close the line in (a) back into the fault. d. Leave fault on for 6.5 cycles, then trip the line in (a) and remove fault.				X					
94	FLT94-1PH	**Stuck Breaker on Wichita – G1524&G1525T 345kV circuit 1 line** a. Apply single-phase fault at Wichita (532796) on the 345kV bus. b. After 20 cycles, trip the Wichita 345/ (533040) 138/(532830) 13.8kV transformer circuit 1 c. Trip the Wichita –G1524&G1525T (560033) 345 kV circuit 1 line, and remove the fault					X				
95	FLT95-1PH	**Stuck Breaker on Wichita – G1524&G1525T 345kV circuit 1 line** a. Apply single-phase fault at Wichita (532796) on the 345kV bus. b. After 20 cycles, trip the Wichita - Viola (532798) 345kV line circuit 1 c. Trip the Wichita – Thistle (539801) 345 kV circuit 1 line, and remove the fault					X				

Table 2-3 (Continued)
Case List with Contingency Description

Cont. No.	Cont. Name	Description	GEN-2015-001	GEN-2015-003	GEN-2015-015	GEN-2015-016	GEN-2015-024	GEN-2015-025	GEN-2015-028	GEN-2015-030	ASGI-2015-004
96	FLT96-1PH	**Stuck Breaker on Wichita – G14-001 Tap 345kV circuit 1 line** a. Apply single-phase fault at Wichita (532796) on the 345kV bus. b. After 20 cycles, trip the Wichita 345/ (533040) 138/(532829) 13.8kV transformer circuit 1 c. Trip the Wichita – G14-001 Tap (562476) 345 kV line, and remove the fault					X				
97	FLT97-1PH	**Stuck Breaker on Wichita – Reno 345kV circuit 1 line** a. Apply single-phase fault at Wichita (532796) on the 345kV bus. b. After 20 cycles, trip the Wichita – Benton (532791) 345kV line circuit 1 c. Trip the Wichita – Reno (532771) 345 kV line, and remove the fault					X				
98	FLT98-1PH	**Nardin 69kV Single Phase Fault** a. Apply single-phase fault on the Nardin (515528) – Sinclair Blackwell Tap (515509) line, near Nardin. b. Clear fault after 8 cycles by tripping the line in (a). c. Wait 20 cycles, and then re-close the line in (a) back into the fault. d. Leave fault on for 8 cycles, then trip the line in (a) and remove fault.						X			
99	FLT99-1PH	**Nardin 69kV Single Phase Fault** a. Apply single-phase fault on the Nardin (515528) – Deer Creek (514741) line, near Nardin. b. Clear fault after 8 cycles by tripping the line in (a). c. Wait 20 cycles, and then re-close the line in (a) back into the fault. d. Leave fault on for 8 cycles, then trip the line in (a) and remove fault.						X			
100	FLT100-1PH	**Stuck Breaker on Rosehill 345/138/13.8kV circuit 1 transformer** a. Apply single-phase fault at Rosehill (532794) on the 345kV bus. b. After 20 cycles, trip the Rosehill (532794) – Benton (532791) 345kV line c. Trip the Rosehill 345/(533062) 138/(532831) 13.8kV transformer circuit 1, and remove the fault	X							X	
101	FLT101-1PH	**Stuck Breaker on Rosehill 345/138/13.8kV circuit 3 transformer** a. Apply single-phase fault at Rosehill (532794) on the 345kV bus. b. After 20 cycles, trip the Rosehill (532794) – Wolf Creek (532797) 345kV line c. Trip the Rosehill 345/(533062) 138/(532827) 13.8kV transformer circuit 3, and remove the fault	X							X	
102	FLT102-1PH	**Stuck Breaker on Sooner – Ranch Road 345kV line** a. Apply single-phase fault at Sooner (514803) 345kV bus on the Sooner – Ranch Road 345kV line b. After 20 cycles, trip the Sooner (514803) – Woodring 345kV line c. Trip the Sooner– Ranch Road (515576) line, and remove the fault	X							X	
103	FLT103-1PH	**Stuck Breaker on Sooner – Cleveland 345kV line** a. Apply single-phase fault at Sooner (514803) 345kV bus on the Sooner – Cleveland 345kV line b. After 20 cycles, trip the Sooner (514803) 345/ (514802) 138/ (515760) 13.8kV transformer c. Trip the Sooner– Cleveland (512694) line, and remove the fault	X							X	

Table 2-3 (Continued)
Case List with Contingency Description

Cont. No.	Cont. Name	Description	GEN-2015-001	GEN-2015-003	GEN-2015-015	GEN-2015-016	GEN-2015-024	GEN-2015-025	GEN-2015-028	GEN-2015-030	ASGI-2015-004
104	FLT104-1PH	**Stuck Breaker on Coffeyville Farmland – South Coffeyville City 138kV line** a. Apply single-phase fault at Coffeyville Farmland (512734) 138kV bus on the Coffeyville Farmland – South Coffeyville City 138kV line b. After 20 cycles, trip the Coffeyville Farmland (512734) 138/ Coffeyville City (512735) 69/ (512740) 13.8kV transformer c. Trip the Coffeyville Farmland – South Coffeyville City (510378) line, and remove the fault									X
105	FLT105-1PH	**Stuck Breaker on Coffeyville Farmland – Delaware 138kV line** a. Apply single-phase fault at Coffeyville Farmland (512734) 138kV bus on the Coffeyville Farmland – Delaware138kV line b. After 20 cycles, trip the Coffeyville Farmland (512734) 138/ Coffeyville City (512735) 69/ (512740) 13.8kV transformer c. Trip the Coffeyville Farmland – Delaware (510379) line, and remove the fault									X

SECTION 3: STABILITY ANALYSIS

The objective of the Stability Analysis was to determine the impacts of the generator interconnections on the stability and voltage recovery on the SPP transmission system. If problems with stability or voltage recovery were identified the need for reactive compensation or system upgrades were investigated.

3.1 Approach

SPP provided MEPPI with the following three power flow cases:

- 2015 Summer Peak
- 2015 Winter Peak
- 2025 Summer Peak

Each case was examined prior to the Stability Analysis to ensure the case contained the proposed study projects and any previously queued projects listed in Tables 2-2 and 2-3 respectively. There was no suspect power flow data in the study area. The dynamic datasets were also verified and stable initial system conditions (i.e., “flat lines”) were achieved. Three-phase and single phase-to-ground faults listed in Table 2-3 were examined. Single-phase fault impedances were calculated for each season to result in a voltage of approximately 60% of the pre-fault voltage. Refer to Table 3-1 for a list of the calculated single-phase fault impedances used for the Cluster

Scenario. Refer to Tables 3-2 through 3-9 for single-phase fault impedances used for each Stand Alone Scenario.

Table 3-1
Calculated Single-Phase Fault Impedances for Cluster Scenario

Cont. No.*	Cont. Name	Single-Phase Fault Impedance (MVA)		
		2015 Summer	2015 Winter	2025 Summer
85	FLT85-1PH	-4234.4	-4031.3	-4234.4
86	FLT86-1PH	-5250.0	-5046.9	-5250.0
87	FLT87-1PH	-5250.0	-5046.9	-5250.0
88	FLT88-1PH	-4437.5	-4437.5	-4843.8
89	FLT89-1PH	-4437.5	-4437.5	-4843.8
90	FLT90-1PH	-1375.0	-1375.0	-1375.0
91	FLT91-1PH	-1375.0	-1375.0	-1375.0
92	FLT92-1PH	-1375.0	-1375.0	-1375.0
93	FLT93-1PH	-1375.0	-1375.0	-1375.0
94	FLT94-1PH	-9312.5	-7687.5	-10125.0
95	FLT95-1PH	-9312.5	-7687.5	-10125.0
96	FLT96-1PH	-9312.5	-7687.5	-10125.0
97	FLT97-1PH	-9312.5	-7687.5	-10125.0
98	FLT98-1PH	-500.0	-468.8	-468.8
99	FLT99-1PH	-500.0	-468.8	-468.8
100	FLT100-1PH	-7281.3	-6468.8	-7281.3
101	FLT101-1PH	-7281.3	-6468.8	-7281.3
102	FLT102-1PH	-9312.5	-8500.0	-9312.5
103	FLT103-1PH	-9312.5	-8500.0	-9312.5
104	FLT104-1PH	-1250.0	-1250.0	-1250.0
105	FLT105-1PH	-1250.0	-1250.0	-1250.0

*Refer to Table 2-3 for a description of the contingency scenerio

Table 3-2
Calculated Single-Phase Fault Impedances for Stand Alone Scenario: GEN-2015-001

Cont. No.*	Cont. Name	Single-Phase Fault Impedance (MVA)		
		2015 Summer	2015 Winter	2025 Summer
86	FLT86-1PH	-5250.0	-4843.8	-5250.0
87	FLT87-1PH	-5250.0	-4843.8	-5250.0
100	FLT100-1PH	-7281.3	-6062.5	-7281.3
101	FLT101-1PH	-7281.3	-6062.5	-7281.3
102	FLT102-1PH	-8906.3	-8500.0	-9312.5
103	FLT103-1PH	-8906.3	-8500.0	-9312.5

*Refer to Table 2-3 for a description of the contingency scenerio

Table 3-3
Calculated Single-Phase Fault Impedances for Stand Alone Scenario: GEN-2015-003

Cont. No.*	Cont. Name	Single-Phase Fault Impedance (MVA)		
		2015 Summer	2015 Winter	2025 Summer
88	FLT88-1PH	-4437.5	-4234.4	-4843.8
89	FLT89-1PH	-4437.5	-4234.4	-4843.8

*Refer to Table 2-3 for a description of the contingency scenerio

Table 3-4
Calculated Single-Phase Fault Impedances for Stand Alone Scenario: GEN-2015-015

Cont. No.*	Cont. Name	Single-Phase Fault Impedance (MVA)		
		2015 Summer	2015 Winter	2025 Summer
90	FLT90-1PH	-1375.0	-1375.0	-1375.0
91	FLT91-1PH	-1375.0	-1375.0	-1375.0

*Refer to Table 2-3 for a description of the contingency scenerio

Table 3-5
Calculated Single-Phase Fault Impedances for Stand Alone Scenario: GEN-2015-016

Cont. No.*	Cont. Name	Single-Phase Fault Impedance (MVA)		
		2015 Summer	2015 Winter	2025 Summer
92	FLT92-1PH	-1375.0	-1375.0	-1375.0
93	FLT93-1PH	-1375.0	-1375.0	-1375.0

*Refer to Table 2-3 for a description of the contingency scenerio

Table 3-6
Calculated Single-Phase Fault Impedances for Stand Alone Scenario: GEN-2015-024 and GEN-2015-025

Cont. No.*	Cont. Name	Single-Phase Fault Impedance (MVA)		
		2015 Summer	2015 Winter	2025 Summer
94	FLT94-1PH	-9312.5	-7687.5	-10125.0
95	FLT95-1PH	-9312.5	-7687.5	-10125.0
96	FLT96-1PH	-9312.5	-7687.5	-10125.0
97	FLT97-1PH	-9312.5	-7687.5	-10125.0

*Refer to Table 2-3 for a description of the contingency scenerio

Table 3-7
Calculated Single-Phase Fault Impedances for Stand Alone Scenario: GEN-2015-028

Cont. No.*	Cont. Name	Single-Phase Fault Impedance (MVA)		
		2015 Summer	2015 Winter	2025 Summer
98	FLT98-1PH	-500.0	-468.8	-468.8
99	FLT99-1PH	-500.0	-468.8	-468.8

*Refer to Table 2-3 for a description of the contingency scenerio

Table 3-8
Calculated Single-Phase Fault Impedances for Stand Alone Scenario: GEN-2015-030

Cont. No.*	Cont. Name	Single-Phase Fault Impedance (MVA)		
		2015 Summer	2015 Winter	2025 Summer
100	FLT100-1PH	-7281.3	-6062.5	-7281.3
101	FLT101-1PH	-7281.3	-6062.5	-7281.3
102	FLT102-1PH	-8906.3	-8500.0	-9312.5
103	FLT103-1PH	-8906.3	-8500.0	-9312.5

*Refer to Table 2-3 for a description of the contingency scenerio

Table 3-9
Calculated Single-Phase Fault Impedances for Stand Alone Scenario: ASGI-2015-004

Cont. No.*	Cont. Name	Single-Phase Fault Impedance (MVA)		
		2015 Summer	2015 Winter	2025 Summer
104	FLT104-1PH	-1250.0	-1250.0	-1312.5
105	FLT105-1PH	-1250.0	-1250.0	-1312.5

*Refer to Table 2-3 for a description of the contingency scenerio

Bus voltages, machine rotor angles, and previously queued generation in the study area were monitored in addition to bus voltages and machine rotor angles in the following areas:

- 520 AEPW
- 524 OKGE
- 525 WFEC
- 526 SPS
- 531 MIDW
- 534 SUNC
- 536 WERE
- 540 GMO
- 541 ETEC

Requested and previously queued generation outside the above study area was also monitored.

The results of the analysis determined if reactive compensation or system upgrades were required to obtain acceptable system performance. If additional reactive compensation was required, the size, type, and location were determined. The proposed reactive reinforcements would ensure the wind or solar farm meets FERC Order 661A low voltage requirements and return the wind or solar farm to its pre-disturbance operating voltage. If the results indicated the need for fast responding reactive support, dynamic support such as an SVC or STATCOM was investigated. If tripping of the prior queued projects was observed during the stability analysis

(for under/over voltage or under/over frequency) the simulations were re-ran with the prior queued project's voltage and frequency tripping disabled.

3.2 Cluster Scenario Stability Analysis Results

The Stability Analysis determined that there were no contingencies that resulted in system instability, generation tripping offline, or voltage violations for the 2015 Summer Peak, 2015 Winter Peak, and 2025 Summer peak conditions when all generation interconnection requests were at 100% output.

Refer to Table 3-10 for a summary of the Stability Analysis results for the contingencies listed in Table 2-3. Table 3-10 is a summary of the stability results for the 2015 Summer Peak, 2015 Winter Peak, and 2025 Summer Peak conditions and states whether the system remained stable or generation tripped offline and if acceptable voltage recovery was observed after the fault was cleared. Voltage recovery criteria includes ensuring that the transient voltage recovery is between 0.7 p.u. and 1.2 p.u. and ending in a steady-state voltage (for N-1 contingencies) at the pre-contingent level or at least 0.9 p.u. If high or low voltages were observed the number of buses failing the voltage criteria was listed.

Note contingencies, FLT01-3PH and FLT03-3PH, required the "LVRT extreme UV limit" value in the "VWVRP7" dynamic model of GEN-2015-001 to be changed from 0.05 p.u. to 0.0 p.u. in order for GEN-2015-001 to remain online, as discussed with SPP. The dynamic file modification was used to complete the analysis.

Several voltage buses consistently fell outside of the 0.95 p.u. to 1.05 p.u. range. All instances were observed for pre-fault conditions and since all voltages returned to pre-fault conditions, no mitigation was required.

Refer to Appendix B, Appendix C, and Appendix D for a complete set of plots for all contingencies for 2015 Summer Peak, 2015 Winter Peak, and 2025 Summer Peak conditions, respectively.

Table 3-10
Cluster Scenario: Stability Analysis Summary of Results for 2015 Summer, 2015 Winter, and 2025 Summer Peak Conditions

Cont. No.	Cont. Name	2015 Summer Peak			2015 Winter Peak			2025 Summer Peak		
		Recovers between 0.70 and 1.20 p.u.		Stable?	Recovers between 0.70 and 1.20 p.u.?		Stable?	Recovers between 0.70 and 1.20 p.u.?		Stable?
		Less than 0.70 p.u.	Greater than 1.20 p.u.		Less than 0.70 p.u.	Greater than 1.20 p.u.		Less than 0.70 p.u.	Greater than 1.20 p.u.	
1	FLT01-3PH	No	No	Yes	No	No	Yes	No	No	Yes
2	FLT02-3PH	No	No	Yes	No	No	Yes	No	No	Yes
3	FLT03-3PH	No	No	Yes	No	No	Yes	No	No	Yes
4	FLT04-3PH	No	No	Yes	No	No	Yes	No	No	Yes
5	FLT05-3PH	No	No	Yes	No	No	Yes	No	No	Yes
6	FLT06-3PH	No	No	Yes	No	No	Yes	No	No	Yes
7	FLT07-3PH	No	No	Yes	No	No	Yes	No	No	Yes
8	FLT08-3PH	No	No	Yes	No	No	Yes	No	No	Yes
9	FLT09-3PH	No	No	Yes	No	No	Yes	No	No	Yes
10	FLT10-3PH	No	No	Yes	No	No	Yes	No	No	Yes
11	FLT11-3PH	No	No	Yes	No	No	Yes	No	No	Yes
12	FLT12-3PH	No	No	Yes	No	No	Yes	No	No	Yes
13	FLT13-3PH	No	No	Yes	No	No	Yes	No	No	Yes
14	FLT14-3PH	No	No	Yes	No	No	Yes	No	No	Yes
15	FLT15-3PH	No	No	Yes	No	No	Yes	No	No	Yes
16	FLT16-3PH	No	No	Yes	No	No	Yes	No	No	Yes
17	FLT17-3PH	N/A			N/A			No	No	Yes
18	FLT18-3PH	No	No	Yes	No	No	Yes	No	No	Yes
19	FLT19-3PH	No	No	Yes	No	No	Yes	No	No	Yes
20	FLT20-3PH	No	No	Yes	No	No	Yes	No	No	Yes
21	FLT21-3PH	No	No	Yes	No	No	Yes	No	No	Yes
22	FLT22-3PH	No	No	Yes	No	No	Yes	No	No	Yes
23	FLT23-3PH	No	No	Yes	No	No	Yes	No	No	Yes
24	FLT24-3PH	No	No	Yes	No	No	Yes	No	No	Yes
25	FLT25-3PH	No	No	Yes	No	No	Yes	No	No	Yes
26	FLT26-3PH	No	No	Yes	No	No	Yes	No	No	Yes
27	FLT27-3PH	No	No	Yes	No	No	Yes	No	No	Yes
28	FLT28-3PH	No	No	Yes	No	No	Yes	No	No	Yes
29	FLT29-3PH	No	No	Yes	No	No	Yes	No	No	Yes
30	FLT30-3PH	No	No	Yes	No	No	Yes	No	No	Yes
31	FLT31-3PH	No	No	Yes	No	No	Yes	No	No	Yes
32	FLT32-3PH	No	No	Yes	No	No	Yes	No	No	Yes
33	FLT33-3PH	No	No	Yes	No	No	Yes	No	No	Yes
34	FLT34-3PH	No	No	Yes	No	No	Yes	No	No	Yes
35	FLT35-3PH	No	No	Yes	No	No	Yes	No	No	Yes
36	FLT36-3PH	No	No	Yes	No	No	Yes	No	No	Yes
37	FLT37-3PH	No	No	Yes	No	No	Yes	No	No	Yes
38	FLT38-3PH	No	No	Yes	No	No	Yes	No	No	Yes
39	FLT39-3PH	No	No	Yes	No	No	Yes	No	No	Yes
40	FLT40-3PH	No	No	Yes	No	No	Yes	No	No	Yes
41	FLT41-3PH	No	No	Yes	No	No	Yes	No	No	Yes
42	FLT42-3PH	No	No	Yes	No	No	Yes	No	No	Yes
43	FLT43-3PH	No	No	Yes	No	No	Yes	No	No	Yes
44	FLT44-3PH	No	No	Yes	No	No	Yes	No	No	Yes
45	FLT45-3PH	No	No	Yes	No	No	Yes	No	No	Yes
46	FLT46-3PH	No	No	Yes	No	No	Yes	No	No	Yes
47	FLT47-3PH	No	No	Yes	No	No	Yes	No	No	Yes
48	FLT48-3PH	No	No	Yes	No	No	Yes	No	No	Yes
49	FLT49-3PH	No	No	Yes	No	No	Yes	No	No	Yes
50	FLT50-3PH	No	No	Yes	No	No	Yes	No	No	Yes
51	FLT51-3PH	No	No	Yes	No	No	Yes	No	No	Yes
52	FLT52-3PH	No	No	Yes	No	No	Yes	No	No	Yes
53	FLT53-3PH	No	No	Yes	No	No	Yes	No	No	Yes

Table 3-10 (Continued)
Cluster Scenario: Stability Analysis Summary of Results for 2015 Winter, 2015 Summer, and 2025 Summer Peak Conditions

Cont. No.	Cont. Name	2015 Summer Peak			2015 Winter Peak			2025 Summer Peak		
		Recovers between 0.70 and 1.20 p.u.		Stable?	Recovers between 0.70 and 1.20 p.u.?		Stable?	Recovers between 0.70 and 1.20 p.u.?		Stable?
		Less than 0.70 p.u.	Greater than 1.20 p.u.		Less than 0.70 p.u.	Greater than 1.20 p.u.		Less than 0.70 p.u.	Greater than 1.20 p.u.	
54	FLT54-3PH	No	No	Yes	No	No	Yes	No	No	Yes
55	FLT55-3PH	No	No	Yes	No	No	Yes	No	No	Yes
56	FLT56-3PH	No	No	Yes	No	No	Yes	No	No	Yes
57	FLT57-3PH	No	No	Yes	No	No	Yes	No	No	Yes
58	FLT58-3PH	No	No	Yes	No	No	Yes	No	No	Yes
59	FLT59-3PH	No	No	Yes	No	No	Yes	No	No	Yes
60	FLT60-3PH	No	No	Yes	No	No	Yes	No	No	Yes
61	FLT61-3PH	No	No	Yes	No	No	Yes	No	No	Yes
62	FLT62-3PH	No	No	Yes	No	No	Yes	No	No	Yes
63	FLT63-3PH	No	No	Yes	No	No	Yes	No	No	Yes
64	FLT64-3PH	No	No	Yes	No	No	Yes	No	No	Yes
65	FLT65-3Ph	No	No	Yes	No	No	Yes	No	No	Yes
66	FLT66-3PH	No	No	Yes	No	No	Yes	No	No	Yes
67	FLT67-3PH	No	No	Yes	No	No	Yes	No	No	Yes
68	FLT68-3PH	No	No	Yes	No	No	Yes	No	No	Yes
69	FLT69-3PH	No	No	Yes	No	No	Yes	No	No	Yes
70	FLT70-3PH	No	No	Yes	No	No	Yes	No	No	Yes
71	FLT71-3PH	No	No	Yes	No	No	Yes	No	No	Yes
72	FLT72-3PH	No	No	Yes	No	No	Yes	No	No	Yes
73	FLT73-3PH	No	No	Yes	No	No	Yes	No	No	Yes
74	FLT74-3PH	No	No	Yes	No	No	Yes	No	No	Yes
75	FLT75-3PH	No	No	Yes	No	No	Yes	No	No	Yes
76	FLT76-3PH	No	No	Yes	No	No	Yes	No	No	Yes
77	FLT77-3PH	No	No	Yes	No	No	Yes	No	No	Yes
78	FLT78-3PH	No	No	Yes	No	No	Yes	No	No	Yes
79	FLT79-3PH	No	No	Yes	No	No	Yes	No	No	Yes
80	FLT80-3PH	No	No	Yes	No	No	Yes	No	No	Yes
81	FLT81-3PH	No	No	Yes	No	No	Yes	No	No	Yes
82	FLT82-3PH	No	No	Yes	No	No	Yes	No	No	Yes
83	FLT83-3PH	No	No	Yes	No	No	Yes	No	No	Yes
84	FLT84-3PH	No	No	Yes	No	No	Yes	No	No	Yes
85	FLT85-1PH	No	No	Yes	No	No	Yes	No	No	Yes
86	FLT86-1PH	No	No	Yes	No	No	Yes	No	No	Yes
87	FLT87-1PH	No	No	Yes	No	No	Yes	No	No	Yes
88	FLT88-1PH	No	No	Yes	No	No	Yes	No	No	Yes
89	FLT89-1PH	No	No	Yes	No	No	Yes	No	No	Yes
90	FLT90-1PH	No	No	Yes	No	No	Yes	No	No	Yes
91	FLT91-1PH	No	No	Yes	No	No	Yes	No	No	Yes
92	FLT92-1PH	No	No	Yes	No	No	Yes	No	No	Yes
93	FLT93-1PH	No	No	Yes	No	No	Yes	No	No	Yes
94	FLT94-1PH	No	No	Yes	No	No	Yes	No	No	Yes
95	FLT95-1PH	No	No	Yes	No	No	Yes	No	No	Yes
96	FLT96-1PH	No	No	Yes	No	No	Yes	No	No	Yes
97	FLT97-1PH	No	No	Yes	No	No	Yes	No	No	Yes
98	FLT98-1PH	No	No	Yes	No	No	Yes	No	No	Yes
99	FLT99-1PH	No	No	Yes	No	No	Yes	No	No	Yes
100	FLT100-1PH	No	No	Yes	No	No	Yes	No	No	Yes
101	FLT101-1PH	No	No	Yes	No	No	Yes	No	No	Yes
102	FLT102-1PH	No	No	Yes	No	No	Yes	No	No	Yes
103	FLT103-1PH	No	No	Yes	No	No	Yes	No	No	Yes
104	FLT104-1PH	No	No	Yes	No	No	Yes	No	No	Yes
105	FLT105-1PH	No	No	Yes	No	No	Yes	No	No	Yes

3.3 Stand Alone Scenario Stability Analysis Results: GEN-2015-001

The Stability Analysis determined that there were no contingencies that resulted in system instability, generation tripping offline, or voltage violations for 2015 Summer Peak, 2015 Winter Peak, and 2025 Summer Peak conditions when GEN-2015-001 was at 100% output.

Refer to Table 3-11 for a summary of the Stability Analysis results for the contingencies listed in Table 2-3 that correspond to the GEN-2015-001 Stand Alone Analysis. Table 3-11 is a summary of the stability results for the 2015 Summer Peak, 2015 Winter Peak, and 2025 Summer Peak conditions and states whether the system remained stable or generation tripped offline and if acceptable voltage recovery was observed after the fault was cleared. Voltage recovery criteria includes ensuring that the transient voltage recovery is between 0.7 p.u. and 1.2 p.u. and ending in a steady state voltage (for N-1 contingencies) at the pre-contingent level or at least 0.9 p.u. If high or low voltages were observed the number of buses failing the voltage criteria was listed.

Note contingencies, FLT01-3PH and FLT03-3PH, required the “LVRT extreme UV limit” value in the “VWVRP7” dynamic model of GEN-2015-001 to be changed from 0.05 p.u. to 0.0 p.u. in order for GEN-2015-001 to remain online, as discussed with SPP. The dynamic file modification was used to complete the analysis.

Several voltage buses consistently fell outside of the 0.95 p.u. to 1.05 p.u. range. All instances were observed for pre-fault conditions and since all voltages returned to pre-fault conditions, no mitigation was required.

Refer to Appendix E for a complete set of plots for all the GEN-2015-001 Stand Alone Analysis contingencies for 2015 Summer Peak, 2015 Winter Peak, and 2025 Summer Peak conditions.

Table 3-11
Stand Alone Scenario GEN-2015-001: Stability Analysis Summary of Results for 2015 Winter, 2015 Summer, and 2025 Summer Peak Conditions

Cont. No.	Cont. Name	2015 Summer Peak			2015 Winter Peak			2025 Summer Peak		
		Recovers between 0.70 and 1.20 p.u.		Stable?	Recovers between 0.70 and 1.20 p.u.?		Stable?	Recovers between 0.70 and 1.20 p.u.?		Stable?
		Less than 0.70 p.u.	Greater than 1.20 p.u.		Less than 0.70 p.u.	Greater than 1.20 p.u.		Less than 0.70 p.u.	Greater than 1.20 p.u.	
1	FLT01-3PH	No	No	Yes	No	No	Yes	No	No	Yes
2	FLT02-3PH	No	No	Yes	No	No	Yes	No	No	Yes
3	FLT03-3PH	No	No	Yes	No	No	Yes	No	No	Yes
4	FLT04-3PH	No	No	Yes	No	No	Yes	No	No	Yes
5	FLT05-3PH	No	No	Yes	No	No	Yes	No	No	Yes
6	FLT06-3PH	No	No	Yes	No	No	Yes	No	No	Yes
7	FLT07-3PH	No	No	Yes	No	No	Yes	No	No	Yes
8	FLT08-3PH	No	No	Yes	No	No	Yes	No	No	Yes
9	FLT09-3PH	No	No	Yes	No	No	Yes	No	No	Yes
12	FLT12-3PH	No	No	Yes	No	No	Yes	No	No	Yes
13	FLT13-3PH	No	No	Yes	No	No	Yes	No	No	Yes
58	FLT58-3PH	No	No	Yes	No	No	Yes	No	No	Yes
59	FLT59-3PH	No	No	Yes	No	No	Yes	No	No	Yes
60	FLT60-3PH	No	No	Yes	No	No	Yes	No	No	Yes
61	FLT61-3PH	No	No	Yes	No	No	Yes	No	No	Yes
62	FLT62-3PH	No	No	Yes	No	No	Yes	No	No	Yes
76	FLT76-3PH	No	No	Yes	No	No	Yes	No	No	Yes
79	FLT79-3PH	No	No	Yes	No	No	Yes	No	No	Yes
80	FLT80-3PH	No	No	Yes	No	No	Yes	No	No	Yes
82	FLT82-3PH	No	No	Yes	No	No	Yes	No	No	Yes
86	FLT86-1PH	No	No	Yes	No	No	Yes	No	No	Yes
87	FLT87-1PH	No	No	Yes	No	No	Yes	No	No	Yes
100	FLT100-1PH	No	No	Yes	No	No	Yes	No	No	Yes
101	FLT101-1PH	No	No	Yes	No	No	Yes	No	No	Yes
102	FLT102-1PH	No	No	Yes	No	No	Yes	No	No	Yes
103	FLT103-1PH	No	No	Yes	No	No	Yes	No	No	Yes

3.4 Stand Alone Scenario Stability Analysis Results: GEN-2015-003

The Stability Analysis determined that there were no contingencies that resulted in system instability, generation tripping offline, or voltage violations for the 2015 Summer Peak, 2015 Winter Peak, and 2025 Summer peak conditions when GEN-2015-003 was at 100% output.

Refer to Table 3-12 for a summary of the Stability Analysis results for the contingencies listed in Table 2-3 that corresponds to the GEN-2015-003 Stand Alone Analysis. Table 3-12 is a summary of the stability results for the 2015 Summer Peak, 2015 Winter Peak, and 2025 Summer Peak conditions and states whether the system remained stable or generation tripped offline and if acceptable voltage recovery was observed after the fault was cleared. Voltage recovery criteria includes ensuring that the transient voltage recovery is between 0.7 p.u. and 1.2 p.u. and ending in a steady state voltage (for N-1 contingencies) at the pre-contingent level or at least 0.9 p.u. If high or low voltages were observed the number of buses failing the voltage criteria was listed.

Several voltage buses consistently fell outside of the 0.95 p.u. to 1.05 p.u. range. All instances were observed for pre-fault condition and since all voltages restored to pre-fault conditions, no mitigation was required.

Refer to Appendix F for a complete set of plots for all the GEN-2015-003 Stand Alone Scenario contingencies for 2015 Summer Peak, 2015 Winter Peak, and 2025 Summer Peak conditions.

Table 3-12
Stand Alone Scenario GEN-2015-003: Stability Analysis Summary of Results for 2015 Winter, 2015 Summer, and 2025 Summer Peak Conditions

Cont. No.	Cont. Name	2015 Summer Peak			2015 Winter Peak			2025 Summer Peak		
		Recovers between 0.70 and 1.20 p.u.		Stable?	Recovers between 0.70 and 1.20 p.u.?		Stable?	Recovers between 0.70 and 1.20 p.u.?		Stable?
		Less than 0.70 p.u.	Greater than 1.20 p.u.		Less than 0.70 p.u.	Greater than 1.20 p.u.		Less than 0.70 p.u.	Greater than 1.20 p.u.	
10	FLT10-3PH	No	No	Yes	No	No	Yes	No	No	Yes
11	FLT11-3PH	No	No	Yes	No	No	Yes	No	No	Yes
12	FLT12-3PH	No	No	Yes	No	No	Yes	No	No	Yes
13	FLT13-3PH	No	No	Yes	No	No	Yes	No	No	Yes
14	FLT14-3PH	No	No	Yes	No	No	Yes	No	No	Yes
15	FLT15-3PH	No	No	Yes	No	No	Yes	No	No	Yes
16	FLT16-3PH	No	No	Yes	No	No	Yes	No	No	Yes
17	FLT17-3PH	N/A			N/A			No	No	Yes
18	FLT18-3PH	No	No	Yes	No	No	Yes	No	No	Yes
33	FLT33-3PH	No	No	Yes	No	No	Yes	No	No	Yes
62	FLT62-3PH	No	No	Yes	No	No	Yes	No	No	Yes
63	FLT63-3PH	No	No	Yes	No	No	Yes	No	No	Yes
64	FLT64-3PH	No	No	Yes	No	No	Yes	No	No	Yes
65	FLT65-3PH	No	No	Yes	No	No	Yes	No	No	Yes
66	FLT66-3PH	No	No	Yes	No	No	Yes	No	No	Yes
73	FLT73-3PH	No	No	Yes	No	No	Yes	No	No	Yes
74	FLT74-3PH	No	No	Yes	No	No	Yes	No	No	Yes
75	FLT75-3PH	No	No	Yes	No	No	Yes	No	No	Yes
76	FLT76-3PH	No	No	Yes	No	No	Yes	No	No	Yes
88	FLT88-1PH	No	No	Yes	No	No	Yes	No	No	Yes
89	FLT89-1PH	No	No	Yes	No	No	Yes	No	No	Yes

3.5 Stand Alone Scenario Stability Analysis Results: GEN-2015-015

The Stability Analysis determined that there were no contingencies that resulted in system instability, generation tripping offline, or voltage violations for the 2015 Summer Peak, 2015 Winter Peak, and 2025 Summer peak conditions when GEN-2015-015 was at 100% output.

Refer to Table 3-13 for a summary of the Stability Analysis results for the contingencies listed in Table 2-3 that corresponds to the GEN-2015-015 Stand Alone Analysis. Table 3-13 is a summary of the stability results for the 2015 Summer Peak, 2015 Winter Peak, and 2025 Summer Peak conditions and states whether the system remained stable or generation tripped offline and if acceptable voltage recovery was observed after the fault was cleared. Voltage recovery criteria includes ensuring that the transient voltage recovery is between 0.7 p.u. and 1.2 p.u. and ending in a steady state voltage (for N-1 contingencies) at the pre-contingent level or at

least 0.9 p.u. If high or low voltages were observed the number of buses failing the voltage criteria was listed.

Several voltage buses consistently fell outside of the 0.95 p.u. to 1.05 p.u. range. All instances were observed for pre-fault conditions and since all voltages returned to pre-fault conditions, no mitigation was required.

Refer to Appendix G for a complete set of plots for all the GEN-2015-015 Stand Alone Scenario contingencies for 2015 Summer Peak, 2015 Winter Peak, and 2025 Summer Peak conditions.

Table 3-13
Stand Alone Scenario GEN-2015-015: Stability Analysis Summary of Results for 2015 Winter, 2015 Summer, and 2025 Summer Peak Conditions

Cont. No.	Cont. Name	2015 Summer Peak			2015 Winter Peak			2025 Summer Peak		
		Recovers between 0.70 and 1.20 p.u.		Stable?	Recovers between 0.70 and 1.20 p.u.?		Stable?	Recovers between 0.70 and 1.20 p.u.?		Stable?
		Less than 0.70 p.u.	Greater than 1.20 p.u.		Less than 0.70 p.u.	Greater than 1.20 p.u.		Less than 0.70 p.u.	Greater than 1.20 p.u.	
2	FLT02-3PH	No	No	Yes	No	No	Yes	No	No	Yes
3	FLT03-3PH	No	No	Yes	No	No	Yes	No	No	Yes
7	FLT07-3PH	No	No	Yes	No	No	Yes	No	No	Yes
8	FLT08-3PH	No	No	Yes	No	No	Yes	No	No	Yes
9	FLT09-3PH	No	No	Yes	No	No	Yes	No	No	Yes
10	FLT10-3PH	No	No	Yes	No	No	Yes	No	No	Yes
19	FLT19-3PH	No	No	Yes	No	No	Yes	No	No	Yes
20	FLT20-3PH	No	No	Yes	No	No	Yes	No	No	Yes
21	FLT21-3PH	No	No	Yes	No	No	Yes	No	No	Yes
22	FLT22-3PH	No	No	Yes	No	No	Yes	No	No	Yes
23	FLT23-3PH	No	No	Yes	No	No	Yes	No	No	Yes
64	FLT64-3PH	No	No	Yes	No	No	Yes	No	No	Yes
66	FLT66-3PH	No	No	Yes	No	No	Yes	No	No	Yes
67	FLT67-3PH	No	No	Yes	No	No	Yes	No	No	Yes
68	FLT68-3PH	No	No	Yes	No	No	Yes	No	No	Yes
90	FLT90-1PH	No	No	Yes	No	No	Yes	No	No	Yes
91	FLT91-1PH	No	No	Yes	No	No	Yes	No	No	Yes

3.6 Stand Alone Scenario Stability Analysis Results: GEN-2015-016

The Stability Analysis determined that there were no contingencies that resulted in system instability, generation tripping offline, or voltage violations for the 2015 Summer Peak, 2015 Winter Peak, and 2025 Summer peak conditions when GEN-2015-016 was at 100% output.

Refer to Table 3-14 for a summary of the Stability Analysis results for the contingencies listed in Table 2-3 that corresponds to the GEN-2105-016 Stand Alone Analysis. Table 3-14 is a summary of the stability results for the 2015 Summer Peak, 2015 Winter Peak, and 2025 Summer Peak conditions and states whether the system remained stable or generation tripped offline and if acceptable voltage recovery was observed after the fault was cleared. Voltage recovery criteria includes ensuring that the transient voltage recovery is between 0.7 p.u. and 1.2

p.u. and ending in a steady state voltage (for N-1 contingencies) at the pre-contingent level or at least 0.9 p.u. If high or low voltages were observed the number of buses failing the voltage criteria was listed.

Several voltage buses consistently fell outside of the 0.95 p.u. to 1.05 p.u. range. All instances were observed for pre-fault conditions and since all voltages returned to pre-fault conditions, no mitigation was required.

Refer to Appendix H for a complete set of plots for all the GEN-2015-016 Stand Alone Scenario contingencies for 2015 Summer Peak, 2015 Winter Peak, and 2025 Summer Peak conditions.

Table 3-14
Stand Alone Scenario GEN-2015-016: Stability Analysis Summary of Results for 2015 Winter, 2015 Summer, and 2025 Summer Peak Conditions

Cont. No.	Cont. Name	2015 Summer Peak			2015 Winter Peak			2025 Summer Peak		
		Recovers between 0.70 and 1.20 p.u.		Stable?	Recovers between 0.70 and 1.20 p.u.?		Stable?	Recovers between 0.70 and 1.20 p.u.?		Stable?
		Less than 0.70 p.u.	Greater than 1.20 p.u.		Less than 0.70 p.u.	Greater than 1.20 p.u.		Less than 0.70 p.u.	Greater than 1.20 p.u.	
24	FLT24-3PH	No	No	Yes	No	No	Yes	No	No	Yes
25	FLT25-3PH	No	No	Yes	No	No	Yes	No	No	Yes
26	FLT26-3PH	No	No	Yes	No	No	Yes	No	No	Yes
27	FLT27-3PH	No	No	Yes	No	No	Yes	No	No	Yes
28	FLT28-3PH	No	No	Yes	No	No	Yes	No	No	Yes
29	FLT29-3PH	No	No	Yes	No	No	Yes	No	No	Yes
30	FLT30-3PH	No	No	Yes	No	No	Yes	No	No	Yes
31	FLT31-3PH	No	No	Yes	No	No	Yes	No	No	Yes
32	FLT32-3PH	No	No	Yes	No	No	Yes	No	No	Yes
69	FLT69-3PH	No	No	Yes	No	No	Yes	No	No	Yes
70	FLT70-3PH	No	No	Yes	No	No	Yes	No	No	Yes
71	FLT71-3PH	No	No	Yes	No	No	Yes	No	No	Yes
72	FLT72-3PH	No	No	Yes	No	No	Yes	No	No	Yes
92	FLT92-1PH	No	No	Yes	No	No	Yes	No	No	Yes
93	FLT93-1PH	No	No	Yes	No	No	Yes	No	No	Yes

3.7 Stand Alone Scenario Stability Analysis Results: GEN-2015-024 and GEN-2015-025 (Tap Wichita – Thistle circuits 1&2)

The Stability Analysis determined that there were no contingencies that resulted in system instability, generation tripping offline, or voltage violations for the 2015 Summer Peak, 2015 Winter Peak, and 2025 Summer peak conditions when GEN-2015-024 and GEN-2015-025 were at 100% output.

Refer to Table 3-15 for a summary of the Stability Analysis results for the contingencies listed in Table 2-3 that corresponds to the GEN-2015-024 and GEN-2015-025 Stand Alone Analysis. Table 3-15 is a summary of the stability results for the 2015 Summer Peak, 2015 Winter Peak, and 2025 Summer Peak conditions and states whether the system remained stable or generation tripped offline and if acceptable voltage recovery was observed after the fault was cleared.

Voltage recovery criteria includes ensuring that the transient voltage recovery is between 0.7 p.u. and 1.2 p.u. and ending in a steady state voltage (for N-1 contingencies) at the pre-contingent level or at least 0.9 p.u. If high or low voltages were observed the number of buses failing the voltage criteria was listed.

Several voltage buses consistently fell outside of the 0.95 p.u. to 1.05 p.u. range. All instances were observed for pre-fault conditions and since all voltages returned to pre-fault conditions, no mitigation was required.

Refer to Appendix I for a complete set of plots for all the GEN-2015-024 and GEN-2015-025 Stand Alone Scenario contingencies for 2015 Summer Peak, 2015 Winter Peak, and 2025 Summer Peak conditions.

Table 3-15
Stand Alone Scenario GEN-2015-024 and GEN-2015-025: Stability Analysis Summary of Results for 2015 Winter, 2015 Summer, and 2025 Summer Peak Conditions

Cont. No.	Cont. Name	2015 Summer Peak			2015 Winter Peak			2025 Summer Peak		
		Recovers between 0.70 and 1.20 p.u.		Stable?	Recovers between 0.70 and 1.20 p.u.?		Stable?	Recovers between 0.70 and 1.20 p.u.?		Stable?
		Less than 0.70 p.u.	Greater than 1.20 p.u.		Less than 0.70 p.u.	Greater than 1.20 p.u.		Less than 0.70 p.u.	Greater than 1.20 p.u.	
2	FLT02-3PH	No	No	Yes	No	No	Yes	No	No	Yes
3	FLT03-3PH	No	No	Yes	No	No	Yes	No	No	Yes
4	FLT04-3PH	No	No	Yes	No	No	Yes	No	No	Yes
5	FLT05-3PH	No	No	Yes	No	No	Yes	No	No	Yes
6	FLT06-3PH	No	No	Yes	No	No	Yes	No	No	Yes
9	FLT09-3PH	No	No	Yes	No	No	Yes	No	No	Yes
11	FLT11-3PH	No	No	Yes	No	No	Yes	No	No	Yes
12	FLT12-3PH	No	No	Yes	No	No	Yes	No	No	Yes
13	FLT13-3PH	No	No	Yes	No	No	Yes	No	No	Yes
14	FLT14-3PH	No	No	Yes	No	No	Yes	No	No	Yes
15	FLT15-3PH	No	No	Yes	No	No	Yes	No	No	Yes
16	FLT16-3PH	No	No	Yes	No	No	Yes	No	No	Yes
17	FLT17-3PH	N/A			N/A			No	No	Yes
18	FLT18-3PH	No	No	Yes	No	No	Yes	No	No	Yes
31	FLT31-3PH	No	No	Yes	No	No	Yes	No	No	Yes
33	FLT33-3PH	No	No	Yes	No	No	Yes	No	No	Yes
34	FLT34-3PH	No	No	Yes	No	No	Yes	No	No	Yes
35	FLT35-3PH	No	No	Yes	No	No	Yes	No	No	Yes
36	FLT36-3PH	No	No	Yes	No	No	Yes	No	No	Yes
37	FLT37-3PH	No	No	Yes	No	No	Yes	No	No	Yes
38	FLT38-3PH	No	No	Yes	No	No	Yes	No	No	Yes
39	FLT39-3PH	No	No	Yes	No	No	Yes	No	No	Yes
60	FLT60-3PH	No	No	Yes	No	No	Yes	No	No	Yes
61	FLT61-3PH	No	No	Yes	No	No	Yes	No	No	Yes
62	FLT62-3PH	No	No	Yes	No	No	Yes	No	No	Yes
63	FLT63-3PH	No	No	Yes	No	No	Yes	No	No	Yes
64	FLT64-3PH	No	No	Yes	No	No	Yes	No	No	Yes
65	FLT65-3PH	No	No	Yes	No	No	Yes	No	No	Yes
66	FLT66-3PH	No	No	Yes	No	No	Yes	No	No	Yes
73	FLT73-3PH	No	No	Yes	No	No	Yes	No	No	Yes
74	FLT74-3PH	No	No	Yes	No	No	Yes	No	No	Yes
75	FLT75-3PH	No	No	Yes	No	No	Yes	No	No	Yes
76	FLT76-3PH	No	No	Yes	No	No	Yes	No	No	Yes
94	FLT94-1PH	No	No	Yes	No	No	Yes	No	No	Yes
95	FLT95-1PH	No	No	Yes	No	No	Yes	No	No	Yes
96	FLT96-1PH	No	No	Yes	No	No	Yes	No	No	Yes
97	FLT97-1PH	No	No	Yes	No	No	Yes	No	No	Yes

3.8 Stand Alone Scenario Stability Analysis Results: GEN-2015-028

The Stability Analysis determined that there were no contingencies that resulted in system instability, generation tripping offline, or voltage violations for the 2015 Summer Peak, 2015 Winter Peak, and 2025 Summer peak conditions when GEN-2015-028 was at 100% output.

Refer to Table 3-16 for a summary of the Stability Analysis results for the contingencies listed in Table 2-3 that corresponds to the GEN-2015-028 Stand Alone Analysis. Table 3-16 is a summary of the stability results for the 2015 Summer Peak, 2015 Winter Peak, and 2025

Summer Peak conditions and states whether the system remained stable or generation tripped offline and if acceptable voltage recovery was observed after the fault was cleared. Voltage recovery criteria includes ensuring that the transient voltage recovery is between 0.7 p.u. and 1.2 p.u. and ending in a steady state voltage (for N-1 contingencies) at the pre-contingent level or at least 0.9 p.u. If high or low voltages were observed the number of buses failing the voltage criteria was listed.

Several voltage buses consistently fell outside of the 0.95 p.u. to 1.05 p.u. range. All instances were observed for pre-fault conditions and since all voltages returned to pre-fault conditions, no mitigation was required.

Refer to Appendix J for a complete set of plots for all the GEN-2015-028 Stand Alone Scenario contingencies for 2015 Summer Peak, 2015 Winter Peak, and 2025 Summer Peak conditions.

Table 3-16
Stand Alone Scenario GEN-2015-028: Stability Analysis Summary of Results for 2015 Winter, 2015 Summer, and 2025 Summer Peak Conditions

Cont. No.	Cont. Name	2015 Summer Peak			2015 Winter Peak			2025 Summer Peak		
		Recovers between 0.70 and 1.20 p.u.		Stable?	Recovers between 0.70 and 1.20 p.u.?		Stable?	Recovers between 0.70 and 1.20 p.u.?		Stable?
		Less than 0.70 p.u.	Greater than 1.20 p.u.		Less than 0.70 p.u.	Greater than 1.20 p.u.		Less than 0.70 p.u.	Greater than 1.20 p.u.	
3	FLT03-3PH	No	No	Yes	No	No	Yes	No	No	Yes
10	FLT10-3PH	No	No	Yes	No	No	Yes	No	No	Yes
18	FLT18-3PH	No	No	Yes	No	No	Yes	No	No	Yes
19	FLT19-3PH	No	No	Yes	No	No	Yes	No	No	Yes
20	FLT20-3PH	No	No	Yes	No	No	Yes	No	No	Yes
21	FLT21-3PH	No	No	Yes	No	No	Yes	No	No	Yes
22	FLT22-3PH	No	No	Yes	No	No	Yes	No	No	Yes
23	FLT23-3PH	No	No	Yes	No	No	Yes	No	No	Yes
40	FLT40-3PH	No	No	Yes	No	No	Yes	No	No	Yes
41	FLT41-3PH	No	No	Yes	No	No	Yes	No	No	Yes
42	FLT42-3PH	No	No	Yes	No	No	Yes	No	No	Yes
43	FLT43-3PH	No	No	Yes	No	No	Yes	No	No	Yes
44	FLT44-3PH	No	No	Yes	No	No	Yes	No	No	Yes
45	FLT45-3PH	No	No	Yes	No	No	Yes	No	No	Yes
46	FLT46-3PH	No	No	Yes	No	No	Yes	No	No	Yes
67	FLT67-3PH	No	No	Yes	No	No	Yes	No	No	Yes
68	FLT68-3PH	No	No	Yes	No	No	Yes	No	No	Yes
77	FLT77-3PH	No	No	Yes	No	No	Yes	No	No	Yes
78	FLT78-3PH	No	No	Yes	No	No	Yes	No	No	Yes
98	FLT98-1PH	No	No	Yes	No	No	Yes	No	No	Yes
99	FLT99-1PH	No	No	Yes	No	No	Yes	No	No	Yes

3.9 Stand Alone Scenario Stability Analysis Results: GEN-2015-030

The Stability Analysis determined that there were no contingencies that resulted in system instability, generation tripping offline, or voltage violations for the 2015 Summer Peak, 2015 Winter Peak, and 2025 Summer peak conditions when GEN-2015-030 was at 100% output.

Refer to Table 3-17 for a summary of the Stability Analysis results for the contingencies listed in Table 2-3 that corresponds to the GEN-2015-030 Stand Alone Analysis. Table 3-17 is a summary of the stability results for the 2015 Summer Peak, 2015 Winter Peak, and 2025 Summer Peak conditions and states whether the system remained stable or generation tripped offline and if acceptable voltage recovery was observed after the fault was cleared. Voltage recovery criteria includes ensuring that the transient voltage recovery is between 0.7 p.u. and 1.2 p.u. and ending in a steady state voltage (for N-1 contingencies) at the pre-contingent level or at least 0.9 p.u. If high or low voltages were observed the number of buses failing the voltage criteria was listed.

Several voltage buses consistently fell outside of the 0.95 p.u. to 1.05 p.u. range. All instances were observed for pre-fault conditions and since all voltages returned to pre-fault conditions, no mitigation was required.

Refer to Appendix K for a complete set of plots for all the GEN-2015-030 Stand Alone Scenario contingencies for 2015 Summer Peak, 2015 Winter Peak, and 2025 Summer Peak conditions.

Table 3-17
Stand Alone Scenario GEN-2015-030: Stability Analysis Summary of Results for 2015 Winter, 2015 Summer, and 2025 Summer Peak Conditions

Cont. No.	Cont. Name	2015 Summer Peak			2015 Winter Peak			2025 Summer Peak		
		Recovers between 0.70 and 1.20 p.u.		Stable?	Recovers between 0.70 and 1.20 p.u.?		Stable?	Recovers between 0.70 and 1.20 p.u.?		Stable?
		Less than 0.70 p.u.	Greater than 1.20 p.u.		Less than 0.70 p.u.	Greater than 1.20 p.u.		Less than 0.70 p.u.	Greater than 1.20 p.u.	
1	FLT01-3PH	No	No	Yes	No	No	Yes	No	No	Yes
2	FLT02-3PH	No	No	Yes	No	No	Yes	No	No	Yes
3	FLT03-3PH	No	No	Yes	No	No	Yes	No	No	Yes
5	FLT05-3PH	No	No	Yes	No	No	Yes	No	No	Yes
6	FLT06-3PH	No	No	Yes	No	No	Yes	No	No	Yes
7	FLT07-3PH	No	No	Yes	No	No	Yes	No	No	Yes
8	FLT08-3PH	No	No	Yes	No	No	Yes	No	No	Yes
9	FLT09-3PH	No	No	Yes	No	No	Yes	No	No	Yes
12	FLT12-3PH	No	No	Yes	No	No	Yes	No	No	Yes
13	FLT13-3PH	No	No	Yes	No	No	Yes	No	No	Yes
47	FLT47-3PH	No	No	Yes	No	No	Yes	No	No	Yes
48	FLT48-3PH	No	No	Yes	No	No	Yes	No	No	Yes
49	FLT49-3PH	No	No	Yes	No	No	Yes	No	No	Yes
58	FLT58-3PH	No	No	Yes	No	No	Yes	No	No	Yes
59	FLT59-3PH	No	No	Yes	No	No	Yes	No	No	Yes
60	FLT60-3PH	No	No	Yes	No	No	Yes	No	No	Yes
61	FLT61-3PH	No	No	Yes	No	No	Yes	No	No	Yes
62	FLT62-3PH	No	No	Yes	No	No	Yes	No	No	Yes
66	FLT66-3PH	No	No	Yes	No	No	Yes	No	No	Yes
76	FLT76-3PH	No	No	Yes	No	No	Yes	No	No	Yes
79	FLT79-3PH	No	No	Yes	No	No	Yes	No	No	Yes
80	FLT80-3PH	No	No	Yes	No	No	Yes	No	No	Yes
81	FLT81-3PH	No	No	Yes	No	No	Yes	No	No	Yes
82	FLT82-3PH	No	No	Yes	No	No	Yes	No	No	Yes
100	FLT100-1PH	No	No	Yes	No	No	Yes	No	No	Yes
101	FLT101-1PH	No	No	Yes	No	No	Yes	No	No	Yes
102	FLT102-1PH	No	No	Yes	No	No	Yes	No	No	Yes
103	FLT103-1PH	No	No	Yes	No	No	Yes	No	No	Yes

3.10 Stand Alone Scenario Stability Analysis Results: ASGI-2015-004

The Stability Analysis determined that there were no contingencies that resulted in system instability, generation tripping offline, or voltage violations for the 2015 Summer Peak, 2015 Winter Peak, and 2025 Summer peak conditions when ASGI-2015-004 was at 100% output.

Refer to Table 3-18 for a summary of the Stability Analysis results for the contingencies listed in Table 2-3 that corresponds to the ASGI-2015-004 Stand Alone Analysis. Table 3-18 is a summary of the stability results for the 2015 Summer Peak, 2015 Winter Peak, and 2025 Summer Peak conditions and states whether the system remained stable or generation tripped offline and if acceptable voltage recovery was observed after the fault was cleared. Voltage recovery criteria includes ensuring that the transient voltage recovery is between 0.7 p.u. and 1.2 p.u. and ending in a steady state voltage (for N-1 contingencies) at the pre-contingent level or at least 0.9 p.u. If high or low voltages were observed the number of buses failing the voltage criteria was listed.

Several voltage buses consistently fell outside of the 0.95 p.u. to 1.05 p.u. range. All instances were observed for pre-fault conditions and since all voltages returned to pre-fault conditions, no mitigation was required.

Refer to Appendix L for a complete set of plots for all the ASGI-2015-004 Stand Alone Scenario contingencies for 2015 Summer Peak, 2015 Winter Peak, and 2025 Summer Peak conditions.

Table 3-18
Stand Alone Scenario ASGI-2015-004: Stability Analysis Summary of Results for 2015 Winter, 2015 Summer, and 2025 Summer Peak Conditions

Cont. No.	Cont. Name	2015 Summer Peak			2015 Winter Peak			2025 Summer Peak		
		Recovers between 0.70 and 1.20 p.u.		Stable?	Recovers between 0.70 and 1.20 p.u.?		Stable?	Recovers between 0.70 and 1.20 p.u.?		Stable?
		Less than 0.70 p.u.	Greater than 1.20 p.u.		Less than 0.70 p.u.	Greater than 1.20 p.u.		Less than 0.70 p.u.	Greater than 1.20 p.u.	
50	FLT50-3PH	No	No	Yes	No	No	Yes	No	No	Yes
51	FLT51-3PH	No	No	Yes	No	No	Yes	No	No	Yes
52	FLT52-SB	No	No	Yes	No	No	Yes	No	No	Yes
53	FLT53-3PH	No	No	Yes	No	No	Yes	No	No	Yes
54	FLT54-SB	No	No	Yes	No	No	Yes	No	No	Yes
55	FLT55-3PH	No	No	Yes	No	No	Yes	No	No	Yes
56	FLT56-3PH	No	No	Yes	No	No	Yes	No	No	Yes
57	FLT57-3PH	No	No	Yes	No	No	Yes	No	No	Yes
83	FLT83-3PH	No	No	Yes	No	No	Yes	No	No	Yes
84	FLT84-3PH	No	No	Yes	No	No	Yes	No	No	Yes
104	FLT104-1PH	No	No	Yes	No	No	Yes	No	No	Yes
105	FLT105-1PH	No	No	Yes	No	No	Yes	No	No	Yes

SECTION 4: SHORT CIRCUIT ANALYSIS

The objective of this task is to quantify the three-phase to ground fault currents for the 2025 Summer Peak season for each interconnecting generator.

4.1 Approach

The short-circuit analysis will assess breaker adequacy and fault duties for the generator interconnection bus and five buses away from the point of interconnection. MEPPI will assume no outages to find maximum short-circuit currents that flow through the breaker. The Automatic Sequencing Fault Calculation (ASCC) function in PSS/E was utilized to perform this task. FLAT conditions were applied to pre-fault conditions and the following adjustments were utilized:

- All synchronous and asynchronous machine P and Q output was set to zero
- All transformer tap ratios were set to 1.0 p.u. and all phase shift angles were set to zero
- All generator reactance's were fixed to the subtransient reactance
- All line charging was set to zero
- All shunts were set to zero

- All loads were set to zero
- All pre-fault bus voltages were set to 1.0 p.u. and a phase shift angle of zero

4.2 Short Circuit Results

The maximum fault current for each bus is provided for the 2025 Summer Peak condition. The following tables show the short circuit results for the study generators:

- Table 4-1: Short Circuit Analysis for GEN-2015-001
- Table 4-2: Short Circuit Analysis for GEN-2015-003
- Table 4-3: Short Circuit Analysis for GEN-2015-015
- Table 4-4: Short Circuit Analysis for GEN-2015-016
- Table 4-5: Short Circuit Analysis for the GEN-2015-024 and GEN-2015-025
- Table 4-6: Short Circuit Analysis for GEN-2015-028
- Table 4-7: Short Circuit Analysis for GEN-2015-030
- Table 4-8: Short Circuit Analysis for ASGI-2015-004

Table 4-1
Short Circuit Analysis for Study Project GEN-2015-001

Study Generator GEN-2015-001											
Bus Number	Bus Name	Bus Voltage (kV)	Fault Current 3-LG (kA)	Bus Number	Bus Name	Bus Voltage (kV)	Fault Current 3-LG (kA)	Bus Number	Bus Name	Bus Voltage (kV)	Fault Current 3-LG (kA)
533024	29TH 4	138	19.42	533042	FARBER 4	138	16.00	514707	PERRY 4	138	10.86
301430	2CLEVLNDXFMR	69	9.72	514709	FRMNTAP4	138	16.42	515576	RANCHRD7	345	12.91
300943	2SILVCTY	69	10.12	515610	FSHRTAP7	345	15.94	514909	REDBUD 7	345	24.18
300137	4BRISTOW	138	7.16	579253	G07-21&14-02	345	13.58	515544	RENFROW4	138	14.00
301429	4CLEVELNDXFMR	138	16.44	579268	G07-44&14-03	345	9.13	515543	RENFROW7	345	12.87
300138	4CLEVLND	138	16.44	562075	G11-051-TAP	345	16.71	532771	RENO 7	345	12.20
300139	4FAIRFAX	138	7.49	562423	G13-028-TAP	345	25.84	533062	ROSEHIL4	138	31.02
300131	4FISHERTP	138	14.45	562476	G14-001-TAP	345	10.53	532794	ROSEHIL7	345	18.30
301425	4GLENCOE	138	9.20	560033	G1524&G1525T	345	19.53	509870	SAPLPRD7	345	20.75
300996	4JAVINE	138	6.52	572091	GEN-2008-098	345	12.59	515045	SEMINOL7	345	28.12
301339	4SFORKKTP	138	6.81	583490	GEN-2012-041	345	11.42	512726	SILVCTYGR4	138	15.40
300140	4SILVCTY	138	15.55	583740	GEN-2013-028	345	25.84	514799	SNRPMP 4	138	11.22
300141	4STILWTR	138	11.52	583750	GEN-2013-029	345	11.31	514798	SNRPMPT4	138	20.29
533029	59TH ST4	138	18.60	584170	GEN-2014-064	138	9.33	514731	SO4TH 4	138	14.10
533066	64TH 4	138	14.25	584450	GEN-2015-001	345	12.91	514802	SOONER 4	138	31.30
533026	ANDOVER4	138	17.64	584470	GEN-2015-003	345	9.49	514803	SOONER 7	345	22.77
514907	ARCADIA4	138	40.30	584700	GEN-2015-029	345	9.77	514881	SPRNGCK7	345	21.36
514908	ARCADIA7	345	24.98	584690	GEN-2015-030	345	17.67	533067	SPRNGDL4	138	14.39
532988	BELAIRE4	138	18.65	512650	GRDA1 7	345	26.28	515512	SPVALLY4	138	8.38
532986	BENTON 4	138	28.12	515476	HUNTERS7	345	12.54	514758	STDBEAR4	138	13.86
532791	BENTON 7	345	19.01	514825	KAYWIND7	345	11.56	533068	STEARMN4	138	19.68
533030	BOEING 4	138	17.09	514828	KETCHTP4	138	25.47	515011	STILWTR4	138	12.45
514854	BRADEN 4	138	30.07	542981	LACYGNE7	345	24.67	509895	T.NO.2-4	138	34.10
533032	BU11PON4	138	15.00	532800	LATHAMS7	345	10.37	509817	T.NO.--4	138	34.16
533626	BURLJCT2	69	4.90	514873	LNEOAK 4	138	25.96	509852	T.NO.--7	345	23.17
532780	CANEYRV7	345	9.82	514770	MARLNDT4	138	10.81	532993	TALLGRS4	138	10.04
532781	CANEYWF7	345	9.56	521006	MARSHAL4	138	7.66	515407	TATONGA7	345	16.41
533629	CC2SHAR2	69	4.58	514733	MARSHL 4	138	7.69	515181	UNVRSTY4	138	12.43
533035	CHISHLM4	138	22.34	515497	MATHWSN7	345	28.60	532798	VIOLA 7	345	13.64
515477	CHSHLMV7	345	12.52	532990	MIDIAN 4	138	10.17	514710	WAUKOMI4	138	9.34
514898	CIMARON4	138	40.88	514704	MILLERT4	138	20.24	514711	WAUKOTP4	138	14.53
514901	CIMARON7	345	30.05	514801	MINCO 7	345	15.97	532799	WAVERLY7	345	14.77
512694	CLEVLND7	345	14.51	515447	MORISNT4	138	13.36	533604	WEAVER 2	69	11.63
514705	COWCRK 2	69	4.04	515006	MORRISN4	138	13.33	532991	WEAVER 4	138	21.91
514706	COWCRK 4	138	11.15	510406	N.E.S.-7	345	18.42	510376	WEBBTAP4	138	8.06
515448	CRSRDSW7	345	11.58	532793	NEOSHO 7	345	16.22	509757	WEKIWA-4	138	31.10
514827	CTNWOOD4	138	16.19	514879	NORTWST4	138	41.57	509755	WEKIWA-7	345	18.41
510380	DELWARE7	345	11.37	514880	NORTWST7	345	29.44	514761	WHEAGLE4	138	15.67
515400	DMANCRK4	138	8.04	515471	NW164TH4	138	34.21	532796	WICHITA7	345	24.56
515412	DMNCRKT4	138	13.68	509807	ONETA--7	345	26.11	533653	WOLFCRK2	69	5.91
514934	DRAPER 7	345	20.97	515621	OPENSKY7	345	11.59	532797	WOLFCRK7	345	15.97
532801	ELKRVR17	345	9.17	514743	OSAGE 4	138	16.56	514714	WOODRNG4	138	17.74
533793	ELPASO 2	69	11.81	514742	OSGE 2	69	17.57	514715	WOODRNG7	345	16.68
533039	ELPASO 4	138	25.04	514737	OTOE 4	138	16.16	514713	WRVALLY4	138	8.60
533040	EVANS N4	138	41.45	514708	OTTER 4	138	9.40				
514703	FAIRMNT4	138	10.53	512749	PAWNSW4	138	9.73				

Table 4-2
Short Circuit Analysis for Study Projects GEN-2015-003

Study Generator GEN-2015-003											
Bus Number	Bus Name	Bus Voltage (kV)	Fault Current 3-LG (kA)	Bus Number	Bus Name	Bus Voltage (kV)	Fault Current 3-LG (kA)	Bus Number	Bus Name	Bus Voltage (kV)	Fault Current 3-LG (kA)
533024	29TH 4	138	19.42	583490	GEN-2012-041	345	11.42	514708	OTTER 4	138	9.40
533074	45TH ST4	138	28.05	583750	GEN-2013-029	345	11.31	533830	PECK 2	69	6.51
300138	4CLEVLND	138	16.44	583850	GEN-2014-001	345	7.03	514707	PERRY 4	138	10.86
514736	4CORNER2	69	4.08	583990	GEN-2014-049	345	7.88	515576	RANCHRD7	345	12.91
533029	59TH ST4	138	18.60	584170	GEN-2014-064	138	9.33	515544	RENFROW4	138	14.00
514908	ARCADIA7	345	24.98	584450	GEN-2015-001	345	12.91	515543	RENFROW7	345	12.87
533850	BASICCH2	69	20.33	584470	GEN-2015-003	345	9.49	533416	RENO 3	115	29.75
532988	BELAIRE4	138	18.65	584570	GEN-2015-015	138	5.87	532771	RENO 7	345	12.20
533015	BENTLEY4	138	12.28	584700	GEN-2015-029	345	9.77	533062	ROSEHIL4	138	31.02
532986	BENTON 4	138	28.12	584690	GEN-2015-030	345	17.67	532794	ROSEHIL7	345	18.30
532791	BENTON 7	345	19.01	533795	GILL E 2	69	33.33	520409	SAND RDG_138	138	10.18
520203	BYRON_138	138	4.18	533044	GILL E 4	138	27.15	520204	SANDY_CN_138	138	5.45
514757	CHIKASI4	138	9.14	533046	GILL S 4	138	27.15	533063	SC10BEL4	138	9.57
533035	CHISHLM4	138	22.34	533796	GILL W 2	69	33.33	533065	SG12COL4	138	22.62
515477	CHSHLMV7	345	12.52	533045	GILL W 4	138	27.15	514798	SNRPMPT4	138	20.29
514898	CIMARON4	138	40.88	533798	GILLJCT2	69	21.80	514731	SO4TH 4	138	14.10
514901	CIMARON7	345	30.05	515547	GRANTCO2	69	7.53	514802	SOONER 4	138	31.30
533413	CIRCLE 3	115	29.31	515546	GRANTCO4	138	6.78	514803	SOONER 7	345	22.77
539800	CLARKCOUNTY7	345	12.54	539668	HARPER 4	138	5.56	514881	SPRNGCK7	345	21.36
533036	CLEARWT4	138	17.07	533804	HAYSVLJ2	69	14.21	532873	SUMMIT 6	230	13.61
512694	CLEVLND7	345	14.51	520938	HAZLTNJ2	69	2.71	532773	SUMMIT 7	345	11.00
514719	CLYDE 2	69	4.58	515476	HUNTERS7	345	12.54	532984	SUMNER 4	138	9.90
515581	COYOTE 4	138	8.37	533053	LAKERDG4	138	19.03	532774	SWISVAL7	345	16.10
532981	CRESWLN4	138	8.05	532769	LANG 7	345	16.59	509852	T.NO.--7	345	23.17
515448	CRSRDSW7	345	11.58	532800	LATHAMS7	345	10.37	515407	TATONGA7	345	16.41
514827	CTNWOOD4	138	16.19	533812	LIN 2	69	9.69	532985	TCROCK 4	138	5.25
533415	DAVIS 3	115	9.15	533813	MACARTH2	69	22.53	539804	THISTLE4	138	16.48
514934	DRAPER 7	345	20.97	533054	MAIZE 4	138	23.27	539801	THISTLE7	345	15.97
539805	ELMCREEK7	345	5.72	533390	MAIZEW 4	138	27.67	533558	TIMBJCT2	69	8.01
533039	ELPASO 4	138	25.04	521006	MARSHAL4	138	7.66	532992	TIMBJCT4	138	5.61
532768	EMPEC 7	345	16.79	514733	MARSHL 4	138	7.69	532798	VIOLA 7	345	13.64
533040	EVANS N4	138	41.45	515497	MATHWSN7	345	28.60	533075	VIOLA 4	138	20.63
533041	EVANS S4	138	41.45	515569	MDFRDTP4	138	11.66	521085	WAKITA 2	69	5.21
514703	FAIRMNT4	138	10.53	514739	MEDFORD2	69	5.45	520205	WAKITA_138	138	5.53
533042	FARBER 4	138	16.00	532990	MIDIAN 4	138	10.17	514710	WAUKOMI4	138	9.34
532792	FR2EAST7	345	6.41	539676	MILAN 4	138	3.51	514711	WAUKOTP4	138	14.53
532795	FR2WEST7	345	5.16	539675	MILANTP4	138	6.55	532799	WAVERLY7	345	14.77
514709	FRMNTAP4	138	16.42	514704	MILLERT4	138	20.24	532796	WICHITA7	345	24.56
515610	FSHRTAP7	345	15.94	514801	MINCO 7	345	15.97	533438	WMCPHER3	115	15.91
579253	G07-21&14-02	345	13.58	515447	MORISNT4	138	13.36	533653	WOLFCRK2	69	5.91
579268	G07-44&14-03	345	9.13	532770	MORRIS 7	345	12.55	532797	WOLFCRK7	345	15.97
562075	G11-051-TAP	345	16.71	533429	MOUNDRG3	115	9.75	514714	WOODRNG4	138	17.74
562476	G14-001-TAP	345	10.53	521008	NASH 2	69	2.65	514715	WOODRNG7	345	16.68
560031	G15-015-TAP	138	8.51	514879	NORTWST4	138	41.57	514713	WRVALLY4	138	8.60
584660	G1524&G1525	345	5.11	514880	NORTWST7	345	29.44	515375	WWRDEHV7	345	20.32
560033	G1524&G1525T	345	19.53	514740	NUMAOGE2	69	4.58				
532767	GEARY 7	345	9.84	515621	OPENSKY7	345	11.59				

Table 4-3
Short Circuit Analysis for Study Project GEN-2015-015

Study Generator GEN-2015-015											
Bus Number	Bus Name	Bus Voltage (kV)	Fault Current 3-LG (kA)	Bus Number	Bus Name	Bus Voltage (kV)	Fault Current 3-LG (kA)	Bus Number	Bus Name	Bus Voltage (kV)	Fault Current 3-LG (kA)
514755	BLACKWL2	69	8.52	584570	GEN-2015-015	138	5.87	515544	RENFROW4	138	14.00
520871	BRAMAN 2	69	8.95	515547	GRANTCO2	69	7.53	515543	RENFROW7	345	12.87
514750	BRMAN 2	69	8.95	515546	GRANTCO4	138	6.78	520409	SAND RDG_138	138	10.18
514756	CHIKASI2	69	10.21	515476	HUNTERS7	345	12.54	520204	SANDY_CN_138	138	5.45
514757	CHIKASI4	138	9.14	514754	KAYCOOP2	69	5.83	514728	SINCBLK2	69	7.17
515477	CHSHLMV7	345	12.52	514760	KILDARE4	138	10.78	515509	SNCBLKT2	69	7.19
514719	CLYDE 2	69	4.58	515569	MDFRDTP4	138	11.66	532798	VIOLA 7	345	13.64
514748	CONTEMP4	138	13.47	514739	MEDFORD2	69	5.45	533075	VIOLA 4	138	20.63
515581	COYOTE 4	138	8.37	515528	NARDINS2	69	5.52	521085	WAKITA 2	69	5.21
515412	DMNCRKT4	138	13.68	514759	NEWKIRK4	138	8.94	520205	WAKITA_138	138	5.53
532792	FR2EAST7	345	6.41	514751	NEWKRKT2	69	5.59	514761	WHEAGLE4	138	15.67
560031	G15-015-TAP	138	8.51	514764	NWKRKAT4	138	10.45	532796	WICHITA7	345	24.56
583750	GEN-2013-029	345	11.31	529255	OMBLKWL2	69	8.22	514715	WOODRNG7	345	16.68
584470	GEN-2015-003	345	9.49	514743	OSAGE 4	138	16.56				

Table 4-4
Short Circuit Analysis for Study Projects GEN-2015-016

Study Generator GEN-2015-016											
Bus Number	Bus Name	Bus Voltage (kV)	Fault Current 3-LG (kA)	Bus Number	Bus Name	Bus Voltage (kV)	Fault Current 3-LG (kA)	Bus Number	Bus Name	Bus Voltage (kV)	Fault Current 3-LG (kA)
300739	7BLACKBERRY	345	12.25	547523	JOP 59 TX	69	9.60	543069	PAOLA 5	161	9.71
300949	7JASPER	345	10.65	547470	JOP145 5	161	17.23	533769	PITNAC 2	69	11.05
300740	7SPORTSMAN	345	23.75	547483	JOP389 5	161	19.47	543077	PLSTVAL5	161	9.17
533621	ALLEN 2	69	5.67	533696	LABETTS2	69	7.04	547491	PUR421 5	161	9.82
533756	AQUARS 2	69	7.66	542981	LACYGNE7	345	24.67	547541	RIV167 2	69	17.91
547476	ASB349 5	161	12.93	532800	LATHAMS7	345	10.37	547502	RIV167 5	161	21.69
532926	BAKER 5	161	8.43	533003	LIBERTY4	138	7.14	547602	RIV406 2	69	15.78
543057	BUCYRUS5	161	18.93	533765	LITCH 2	69	12.65	547469	RIV4525	161	23.37
532780	CANEYRV7	345	9.82	532932	LITCH 5	161	11.09	547503	RIV452T 5	161	22.97
532781	CANEYWF7	345	9.56	533639	MARMATN2	69	8.34	547501	RIV453 5	161	22.17
543067	CENTENL5	161	9.72	532934	MARMTNE5	161	7.94	533771	ROUSE 2	69	9.04
547477	CJ 366 5	161	12.62	533640	MCKEE 2	69	4.16	543066	S.OTTWA5	161	6.43
543065	CNTRVIL5	161	6.09	512631	MIAMI 5	161	9.10	533644	SE4DEVO2	69	3.67
547530	COL 94 2	69	6.31	533767	MULBERY2	69	7.09	533773	SE8CLEM2	69	4.44
533758	CRAWFOR2	69	6.71	510406	N.E.S.-7	345	18.42	533645	SE9HIAT2	69	3.73
510379	DELWARE4	138	10.88	533768	NEOSHO 2	69	18.72	543055	SEOTTWA5	161	6.52
510380	DELWARE7	345	11.37	533021	NEOSHO 4	138	23.17	542968	STILWEL7	345	23.67
547490	FIR417 5	161	14.28	532937	NEOSHO 5	161	22.10	547498	STL439 5	161	24.04
533876	FRANKLIN2	69	8.58	532793	NEOSHO 7	345	16.22	533008	TV1MNDV4	138	6.82
532938	FRANKLIN5	161	8.62	533022	NEOSHON4	138	23.17	533647	UN1ELSM2	69	7.45
560029	G15-016-TAP	161	7.26	533020	NEOSHOS4	138	23.17	533650	UN8HUMB2	69	4.07
547555	GAL278 2	69	15.82	533005	NEPARSN4	138	11.95	542965	W.GRDNR7	345	23.99
584580	GEN-2015-016	161	6.43	547494	OAK432 5	161	17.21	543068	WAGSTAF5	161	13.20
547690	GLF339 2	69	8.97	533703	ORDNJCT2	69	8.73	532799	WAVERLY7	345	14.77
547601	HOC404 2	69	9.38	547534	ORO110 2	69	17.47	533654	ZILAJCT2	69	5.63
547486	HOC404 4	138	6.42	547467	ORO110 5	161	19.04				
547487	HOC404 5	161	12.83	543112	OSAWAT 5	161	9.34				

Table 4-5
Short Circuit Analysis for Study Project GEN-2015-024 and GEN-2015-025
(Tap Wichita – Thistle circuit 1&2)

Study Generators GEN-2015-025, GEN-2015-025											
Bus Number	Bus Name	Bus Voltage (kV)	Fault Current 3-LG (kA)	Bus Number	Bus Name	Bus Voltage (kV)	Fault Current 3-LG (kA)	Bus Number	Bus Name	Bus Voltage (kV)	Fault Current 3-LG (kA)
533840	17TH 2	69	27.63	532767	GEARY 7	345	9.84	533505	NCTYSVC2	69	4.04
533064	17TH 4	138	17.92	562701	GEN-2006-006	345	14.41	532793	NEOSHO 7	345	16.22
533024	29TH 4	138	19.42	579351	GEN-2007-062	345	8.58	532865	NMANHT6	230	8.91
533440	43LORAN	115	16.29	572091	GEN-2008-098	345	12.59	533822	NOEASTE2	69	22.97
533074	45TH ST4	138	28.05	579480	GEN-2008-124	230	20.12	533060	NOEASTE4	138	20.14
533029	59TH ST4	138	18.60	582008	GEN-2011-008	345	10.06	533371	NORTHVW3	115	11.74
533066	64TH 4	138	14.25	581112	GEN-2011-014	345	10.57	533373	NPHILPJ3	115	11.87
533001	ALTOONA4	138	7.80	582016	GEN-2011-016	345	7.72	515621	OPENSKY7	345	11.59
533026	ANDOVER4	138	17.64	582019	GEN-2011-019	345	20.32	515398	OUSPRT 4	138	9.60
533411	ARKVAL 3	115	9.98	582020	GEN-2011-020	345	20.32	533830	PECK 2	69	6.51
533412	ARKVALJ3	115	10.17	583110	GEN-2011-051	345	16.71	533372	PHILIPS3	115	12.65
532851	AUBURN 6	230	13.44	583370	GEN-2012-024	345	9.95	533608	POTWNTP2	69	5.24
539674	BARBER 4	138	8.02	583490	GEN-2012-041	345	11.42	533307	PRAIRIE3	115	9.24
533850	BASICCH2	69	20.33	583750	GEN-2013-029	345	11.31	515576	RANCHRD7	345	12.91
532988	BELAIRE4	138	18.65	583850	GEN-2014-001	345	7.03	533306	READING3	115	6.38
533015	BENTLEY4	138	12.28	583990	GEN-2014-049	345	7.88	533427	REFINRY3	115	14.77
532986	BENTON 4	138	28.12	584010	GEN-2014-051	345	8.41	515544	RENFROW4	138	14.00
532791	BENTON 7	345	19.01	584450	GEN-2015-001	345	12.91	515543	RENFROW7	345	12.87
533030	BOEING 4	138	17.09	584470	GEN-2015-003	345	9.49	533416	RENO 3	115	29.75
515458	BORDER 7	345	5.11	533795	GILL E 2	69	33.33	532771	RENO 7	345	12.20
533032	BU11PON4	138	15.00	533044	GILL E 4	138	27.15	530686	RICE 6	230	5.01
531501	BUCKNER7	345	10.70	533046	GILL S 4	138	27.15	533832	RIPLEYM2	69	19.51
533626	BURLJCT2	69	4.90	533796	GILL W 2	69	33.33	533062	ROSEHIL4	138	31.02
533031	BURNSTP4	138	4.49	533045	GILL W 4	138	27.15	532794	ROSEHIL7	345	18.30
533583	BUTLER 2	69	12.75	533798	GILLJCT2	69	21.80	533434	SALTCRK3	115	9.64
532987	BUTLER 4	138	10.00	533799	GRANT 2	69	10.39	520409	SAND RDG_138	138	10.18
532989	BUTLERS4	138	10.00	515547	GRANTCO2	69	7.53	533063	SC10BEL4	138	9.57
515554	BVRCNTY7	345	16.00	515546	GRANTCO4	138	6.78	533377	SCHILNG3	115	10.65
532780	CANEYRV7	345	9.82	539679	GRTBEND6	230	8.39	533065	SG12COL4	138	22.62
532781	CANEYWF7	345	9.56	533011	HALSTDN4	138	9.47	530593	SMKYP1 6	230	6.05
533629	CC2SHAR2	69	4.58	533012	HALSTDS4	138	9.47	530599	SMKYP2 6	230	6.47
533630	CC3WEST2	69	4.49	533736	HALSTED2	69	10.65	530592	SMOKYHL6	230	6.97
533034	CENTENN4	138	16.29	539668	HARPER 4	138	5.56	533379	SO GATE3	115	10.80
533362	CHAPMAN3	115	10.45	533804	HAYSVLJ2	69	14.21	514803	SOONER 7	345	22.77
533587	CHASJCT2	69	9.89	533513	HEC 2	69	11.54	539695	SPEARVL6	230	12.81
533589	CHESNEY2	69	8.40	533419	HEC 3	115	26.74	531469	SPERVIL7	345	14.41
533786	CHISHLM2	69	17.73	533421	HEC GT 3	115	28.40	533380	SPRGCRK3	115	3.92
533035	CHISHLM4	138	22.34	533422	HEC U4 3	115	27.59	533067	SPRNGDL4	138	14.39
515477	CHSHLMV7	345	12.52	533369	HILSBOR3	115	2.59	539759	SPRVL 3	115	11.71
533413	CIRCLE 3	115	29.31	533805	HOOVERN2	69	32.33	533068	STEARMN4	138	19.68
532871	CIRCLE 6	230	10.64	533049	HOOVERN4	138	18.85	542968	STILWEL7	345	23.67
533414	CITIES 3	115	9.10	533050	HOOVERS4	138	18.85	533381	SUMMIT 3	115	17.66
539800	CLARKCOUNTY7	345	12.54	532765	HOYT 7	345	15.41	532873	SUMMIT 6	230	13.61
533036	CLEARWT4	138	17.07	515476	HUNTERS7	345	12.54	532773	SUMMIT 7	345	11.00
533037	COMOTAR4	138	18.35	530618	HUNTSVL3	115	4.05	532984	SUMNER 4	138	9.90
539658	CONCRD6	230	5.80	514796	IODINE-4	138	7.09	532856	SWISVAL6	230	21.38
533788	COWSKIN2	69	16.48	539809	IRONWOOD 1 7	345	13.93	532774	SWISVAL7	345	16.10
533038	COWSKIN4	138	19.51	539803	IRONWOOD7	345	13.93	532993	TALLGRS4	138	10.04
542977	CRAIG 7	345	20.77	532852	JEC 6	230	24.72	515407	TATONGA7	345	16.41
532981	CRESWLN4	138	8.05	532766	JEC N 7	345	23.67	533069	TCBURNS4	138	3.25
533506	DAVIS 2	69	7.70	514825	KAYWIND7	345	11.56	532985	TCROCK 4	138	5.25
533415	DAVIS 3	115	9.15	515394	KEENAN 4	138	9.05	532857	TECHILL6	230	11.23
533301	EAST ST3	115	9.19	530558	KNOLL 6	230	10.96	539804	THISTLE4	138	16.48
532801	ELKRVR17	345	9.17	542981	LACYGNE7	345	24.67	539801	THISTLE7	345	15.97
539805	ELMCREEK7	345	5.72	533053	LAKERDG4	138	19.03	533558	TIMBJCT2	69	8.01
539639	ELMCREK6	230	8.21	533304	LANG 3	115	14.37	532992	TIMBJCT4	138	5.61
533793	ELPASO 2	69	11.81	532769	LANG 7	345	16.59	533607	TOWTAPE2	69	5.68
533039	ELPASO 4	138	25.04	532800	LATHAMS7	345	10.37	525832	TUCO_INT 7	345	12.05
533417	EMCPHER3	115	15.33	532853	LAWHILL6	230	13.51	533455	TWR 33 3	115	12.63
532872	EMCPHER6	230	9.46	533812	LIN 2	69	9.69	533359	UNIONRG3	115	3.63
532768	EMPEC 7	345	16.79	533813	MACARTH2	69	22.53	532874	UNIONRG6	230	7.32
533040	EVANS N4	138	41.45	533054	MAIZE 4	138	23.27	532798	VIOLA 7	345	13.64
533041	EVANS S4	138	41.45	533391	MAIZEE 4	138	21.80	533075	VIOLA 4	138	20.63
533368	EXIDE J3	115	12.60	533390	MAIZEW 4	138	27.67	542965	W.GRDNR7	345	23.99

Table 4-5 (Continued)
Short Circuit Analysis for Study Project GEN-2015-024 and GEN-2015-025
(Tap Wichita – Thistle circuit 1&2)

Study Generators GEN-2015-025, GEN-2015-025											
Bus Number	Bus Name	Bus Voltage (kV)	Fault Current 3-LG (kA)	Bus Number	Bus Name	Bus Voltage (kV)	Fault Current 3-LG (kA)	Bus Number	Bus Name	Bus Voltage (kV)	Fault Current 3-LG (kA)
533042	FARBER 4	138	16.00	533426	MANVILE3	115	11.77	520205	WAKITA_138	138	5.53
539638	FLATRDG3	138	14.80	533516	MAPLE J2	69	7.39	532799	WAVERLY7	345	14.77
539631	FLATRWD3	138	9.76	515497	MATHWSN7	345	28.60	533604	WEAVER 2	69	11.63
533366	FLORENC3	115	3.39	533335	MCDOWEL3	115	17.78	532991	WEAVER 4	138	21.91
533043	FOWLER 4	138	16.42	532862	MCDOWEL6	230	6.86	542966	WGARDNR5	161	22.12
532792	FR2EAST7	345	6.41	533428	MCPHER 3	115	15.87	533439	WHEATLD3	115	8.96
532795	FR2WEST7	345	5.16	515569	MDFRDTP4	138	11.66	532796	WICHITA7	345	24.56
533328	FT JCT 3	115	14.64	533597	MIDIAN 2	69	12.34	533183	WM BROS3	115	10.13
579358	G07-062-HV-2	345	6.54	532990	MIDIAN 4	138	10.17	533438	WMCPHER3	115	15.91
560242	G11-017-TAP	345	10.15	539676	MILAN 4	138	3.51	533653	WOLFCRK2	69	5.91
562075	G11-051-TAP	345	16.71	539675	MILANTP4	138	6.55	532797	WOLFCRK7	345	15.97
560000	G11-14-TAP	345	14.39	533305	MORRIS 3	115	12.27	514714	WOODRNG4	138	17.74
583090	G1149&G1504	345	4.67	532863	MORRIS 6	230	13.36	514715	WOODRNG7	345	16.68
562476	G14-001-TAP	345	10.53	532770	MORRIS 7	345	12.55	514785	WOODWRD4	138	20.72
560031	G15-015-TAP	138	8.51	533742	MOUND 2	69	7.47	515376	WWRDEHV4	138	25.46
584660	G1524&G1525	345	5.11	533013	MOUND 4	138	7.94	515375	WWRDEHV7	345	20.32
560033	G1524&G1525T	345	19.53	533429	MOUNDRG3	115	9.75	533016	WWUPLNT4	138	8.96
582708	G-2011-008-1	345	9.00	539637	MRWYP16	230	7.58				
533336	GEARY 3	115	17.16	533529	MWIRNJ22	69	6.71				

Table 4-6
Short Circuit Analysis for Study Project GEN-2015-028

Study Generators GEN-2015-028											
Bus Number	Bus Name	Bus Voltage (kV)	Fault Current 3-LG (kA)	Bus Number	Bus Name	Bus Voltage (kV)	Fault Current 3-LG (kA)	Bus Number	Bus Name	Bus Voltage (kV)	Fault Current 3-LG (kA)
520837	BLACKWE2	69	5.82	514741	DEERCK 2	69	4.54	521013	NUMA 2	69	4.58
514755	BLACKWL2	69	8.52	560031	G15-015-TAP	138	8.51	514740	NUMAOGE2	69	4.58
515478	BLKWLWD2	69	4.89	515547	GRANTCO2	69	7.53	514764	NWKRKAT4	138	10.45
520871	BRAMAN 2	69	8.95	515546	GRANTCO4	138	6.78	529255	OMBLKWL2	69	8.22
514750	BRMAN 2	69	8.95	514754	KAYCOOP2	69	5.83	514728	SINCBLK2	69	7.17
514756	CHIKASI2	69	10.21	514760	KILDARE4	138	10.78	515509	SNCBLKT2	69	7.19
514757	CHIKASI4	138	9.14	514739	MEDFORD2	69	5.45	514752	TONKAWA2	69	4.86
514744	CHILOCO2	69	11.15	515528	NARDINS2	69	5.52	514761	WHEAGLE4	138	15.67
514719	CLYDE 2	69	4.58	521012	NEWKIRK2	69	5.59				
515581	COYOTE 4	138	8.37	514751	NEWKRKT2	69	5.59				

Table 4-7
Short Circuit Analysis for Study Project GEN-2015-030

Study Generator GEN-2015-030											
Bus Number	Bus Name	Bus Voltage (kV)	Fault Current 3-LG (kA)	Bus Number	Bus Name	Bus Voltage (kV)	Fault Current 3-LG (kA)	Bus Number	Bus Name	Bus Voltage (kV)	Fault Current 3-LG (kA)
300889	2BRIISTOW	69	9.36	579253	G07-21&14-02	345	13.58	509844	OWASOTP4	138	14.89
300927	2CLEVLND	69	9.72	579268	G07-44&14-03	345	9.13	509851	P&P WTP4	138	14.89
301430	2CLEVLNDXFMR	69	9.72	579272	G0744&1403HV	345	9.13	512749	PAWNSW4	138	9.73
300928	2DIXIE	69	5.35	562075	G11-051-TAP	345	16.71	515039	PAYNESB4	138	7.42
300929	2FAIRFAX	69	4.84	562423	G13-028-TAP	345	25.84	514707	PERRY 4	138	10.86
300936	2MANFORD	69	6.21	560389	GEN-2010-055	138	31.10	514864	PIEDMNT4	138	21.69
300943	2SILVCTY	69	10.12	583110	GEN-2011-051	345	16.71	514829	PINE ST4	138	11.49
301413	2WILLIAMS	69	11.60	583490	GEN-2012-041	345	11.42	510907	PITTSB-7	345	13.21
300945	2YALE	69	5.14	583740	GEN-2013-028	345	25.84	509863	PPTAP 4	138	10.27
509837	46ST--E4	138	14.00	583750	GEN-2013-029	345	11.31	514851	QUAILCK4	138	28.13
300137	4BRISTOW	138	7.16	584170	GEN-2014-064	138	9.33	509782	R.S.S.-7	345	29.76
300138	4CLEVLND	138	16.44	584450	GEN-2015-001	345	12.91	515576	RANCHRD7	345	12.91
301429	4CLEVLNDXFMR	138	16.44	584470	GEN-2015-003	345	9.49	514909	REDBUD 7	345	24.18
300139	4FAIRFAX	138	7.49	584700	GEN-2015-029	345	9.77	515544	RENFROW4	138	14.00
300145	4FISHER	138	12.23	584690	GEN-2015-030	345	17.67	515543	RENFROW7	345	12.87
300131	4FISHERTP	138	14.45	515800	GRACMNT7	345	14.47	515461	RNDBARN4	138	38.35
301425	4GLENCOE	138	9.20	515546	GRANTCO4	138	6.78	533062	ROSEHIL4	138	31.02
300996	4JAVINE	138	6.52	512656	GRDA1 5	161	41.53	532794	ROSEHIL7	345	18.30
300844	4RAMSEY	138	9.64	512650	GRDA1 7	345	26.28	520409	SAND RDG_138	138	10.18
301369	4REMNGTON	138	7.86	514863	HAYMAKR4	138	25.30	509871	SAPLPRD4	138	32.04
300165	4SFORKK	138	4.34	514774	HENESEY4	138	7.15	509870	SAPLPRD7	345	20.75
301339	4SFORKKTP	138	6.81	515476	HUNTERS7	345	12.54	514895	SARA 4	138	18.41
300140	4SILVCTY	138	15.55	514790	IMO 4	138	10.72	515044	SEMINOL4	138	57.59
300146	4SKIAETP	138	6.90	514820	JENSENT4	138	14.92	515045	SEMINOL7	345	28.12
300141	4STILWTR	138	11.52	514906	JNSKAMO4	138	20.14	509812	SHEFFD-4	138	25.22
300686	4WOODY	138	7.61	514825	KAYWIND7	345	11.56	510432	SHIDWFC4	138	5.62
300740	7SPORTSMAN	345	23.75	514834	KETCH 4	138	25.90	512726	SILVCTYGR4	138	15.40
514907	ARCADIA4	138	40.30	514828	KETCHTP4	138	25.47	509884	SKIATOK4	138	10.41
514908	ARCADIA7	345	24.98	505610	KEYSTON4	138	21.27	514852	SLVRLAK4	138	31.14
532986	BENTON 4	138	28.12	514760	KILDARE4	138	10.78	514799	SNRPMP 4	138	11.22
532791	BENTON 7	345	19.01	515600	KNGFSHR7	345	11.02	514798	SNRPMPT4	138	20.29
514854	BRADEN 4	138	30.07	515514	KNIPE 4	138	4.92	514730	SO4TH 2	69	13.10
514815	BRECKNR4	138	9.96	532800	LATHAMS7	345	10.37	514731	SO4TH 4	138	14.10
515605	CANADN7	345	11.32	515373	LBRTYLK4	138	13.34	514802	SOONER 4	138	31.30
532780	CANEYRV7	345	9.82	515465	LGARBER4	138	20.77	514803	SOONER 7	345	22.77
509839	CDC-ET 4	138	18.48	514873	LNEOAK 4	138	25.96	514881	SPRNGCK7	345	21.36
509842	CDC-WT 4	138	19.20	514770	MARLNDT4	138	10.81	515512	SPVALLY4	138	8.38
515477	CHSHLMV7	345	12.52	521006	MARSHAL4	138	7.66	514758	STDBEAR4	138	13.86
514898	CIMARON4	138	40.88	514733	MARSHL 4	138	7.69	533068	STEARMN4	138	19.68
514901	CIMARON7	345	30.05	515497	MATHWSN7	345	28.60	515011	STILWTR4	138	12.45
509745	CLARKSV7	345	19.71	515009	MCELROY4	138	12.47	509895	T.NO.2-4	138	34.10
512694	CLEVLND7	345	14.51	515444	MCNOWND7	345	15.92	509817	T.NO.--4	138	34.16
515402	CONBLKT2	69	15.58	515569	MDFRDTP4	138	11.66	509852	T.NO.--7	345	23.17
514753	CONORTH4	138	13.52	514704	MILLERT4	138	20.24	515407	TATONGA7	345	16.41
514748	CONTEMP4	138	13.47	514801	MINCO 7	345	15.97	512750	TONECE7	345	15.86
514705	COWCRK 2	69	4.04	515466	MITCHSB4	138	20.71	511425	TUTCONT4	138	10.63
514706	COWCRK 4	138	11.15	515549	MNCWND37	345	11.08	515181	UNVRSTY4	138	12.43
515377	CRESENT4	138	7.06	515447	MORISNT4	138	13.36	532798	VIOLA 7	345	13.64
515448	CRSRDSW7	345	11.58	515006	MORRISN4	138	13.33	533075	VIOLA 4	138	20.63
514827	CTNWOOD4	138	16.19	515224	MUSKOGE7	345	28.52	521100	WARREN 4	138	8.60
515542	CWBOYHT4	138	7.84	510396	N.E.S.-4	138	35.42	514710	WAUKOMI4	138	9.34
514894	CZECHAL4	138	25.97	510406	N.E.S.-7	345	18.42	514711	WAUKOTP4	138	14.53
510379	DELWARE4	138	10.88	532793	NEOSHO 7	345	16.22	532799	WAVERLY7	345	14.77
510380	DELWARE7	345	11.37	512731	NORTHTP4	138	9.89	532991	WEAVER 4	138	21.91
515400	DMANCRK4	138	8.04	514879	NORTWST4	138	41.57	510376	WEBBTAP4	138	8.06
515412	DMNCRKT4	138	13.68	514880	NORTWST7	345	29.44	509823	WED-TAP4	138	18.86
514933	DRAPER 4	138	39.13	515471	NW164TH4	138	34.21	509757	WEKIWA-4	138	31.10
514934	DRAPER 7	345	20.97	509836	OEC 7	345	25.82	509755	WEKIWA-7	345	18.41
532801	ELKRVR17	345	9.17	529241	OMMORANT	69	12.32	514768	WF KAY 2	69	2.95
533039	ELPASO 4	138	25.04	529249	OMWW	69	13.35	514761	WHEAGLE4	138	15.67
514819	EL-RENO4	138	15.08	509806	ONETA--4	138	46.96	532796	WICHITA7	345	24.56

Table 4-7 (Continued)
Short Circuit Analysis for Study Project GEN-2015-030

Study Generator GEN-2015-030											
Bus Number	Bus Name	Bus Voltage (kV)	Fault Current 3-LG (kA)	Bus Number	Bus Name	Bus Voltage (kV)	Fault Current 3-LG (kA)	Bus Number	Bus Name	Bus Voltage (kV)	Fault Current 3-LG (kA)
510377	FAIRFXT4	138	8.10	509807	ONETA--7	345	26.11	533653	WOLFCRK2	69	5.91
514703	FAIRMNT4	138	10.53	515621	OPENSKY7	345	11.59	532797	WOLFCRK7	345	15.97
514712	FAIRMON4	138	8.21	514743	OSAGE 4	138	16.56	514714	WOODRNG4	138	17.74
532792	FR2EAST7	345	6.41	514742	OSGE 2	69	17.57	514715	WOODRNG7	345	16.68
514709	FRMNTAP4	138	16.42	514737	OTOE 4	138	16.16	514713	WRVALLY4	138	8.60
515610	FSHRTAP7	345	15.94	514708	OTTER 4	138	9.40	515375	WWRDEHV7	345	20.32

Table 4-8
Short Circuit Analysis for Study Project ASGI-2015-004

Study Generator ASGI-2015-004											
Bus Number	Bus Name	Bus Voltage (kV)	Fault Current 3-LG (kA)	Bus Number	Bus Name	Bus Voltage (kV)	Fault Current 3-LG (kA)	Bus Number	Bus Name	Bus Voltage (kV)	Fault Current 3-LG (kA)
300739	7BLACKBERRY	345	12.25	510379	DELWARE4	138	10.88	533021	NEOSHO 4	138	23.17
584740	ASGI2015-004	69	8.59	510380	DELWARE7	345	11.37	532937	NEOSHO 5	161	22.10
510391	BV-SE--4	138	12.02	512734	FARML 4	138	7.98	532793	NEOSHO 7	345	16.22
532780	CANEYRV7	345	9.82	542981	LACYGNE7	345	24.67	509807	ONETA--7	345	26.11
512735	COFCTY2	69	8.59	533003	LIBERTY4	138	7.14	510378	SCOFCTY4	138	8.35
510422	COFFEYT4	138	9.63	533004	MONTGOM4	138	6.65	509852	T.NO.--7	345	23.17
533688	DEARING2	69	7.38	510406	N.E.S.-7	345	18.42				
533002	DEARING4	138	8.98	510386	NBVILLE4	138	9.22				

SECTION 5: POWER FACTOR ANALYSIS

The objective of this task is to quantify the power factor at the point of interconnection for the wind farms during base case and system contingencies. SPP transmission planning practice requires interconnecting generation projects to maintain the power factor (pf) at the Point of Interconnection (POI) within +/- 0.95 pf for system intact conditions and for post-contingency conditions. This is analyzed by having the wind farm maintain a prescribed voltage schedule at the point of interconnection of 1.0 p.u. voltage, or if the pre-project voltage is higher than 1.0 p.u., to maintain the pre-project voltage schedule.

The 2015 Summer Peak, 2015 Winter Peak, and 2025 Summer Peak power flows provided by SPP were examined prior to the Power Factor Analysis to ensure they contained the proposed study project modeled at 100% of the nameplate rating and any previously queued projects listed in Table 2-2. There was no suspect power flow data in the study area. The proposed study project and any previously queued projects at the same point of interconnection were turned off during the power factor analysis. The wind farm(s) were then replaced by a generator modeled at the high side bus with the same real power (MW) capability as the wind farm(s) and open limits for the reactive power set points (Mvar). The generator was set to hold the POI scheduled bus voltage. All N-1, three-phase fault contingencies from Table 2-3 were then applied and the reactive power required to maintain the bus voltage was recorded.

5.1 Approach

GEN-2015-001 and GEN-2012-041 were disabled and the generators were placed at the study project's point of interconnect bus. The generators were modeled with PGEN = 200.0 MW for GEN-2015-001, PGEN = 85.269 MW for GEN-2012-041 during Summer Peak conditions, and PGEN=121.488 MW for GEN-2012-041 during Winter Peak conditions. QMin = -9999 Mvar and QMax = 9999 Mvar for both generator for both conditions. All buses and transformers connected from the study project's POI bus to the generators were disabled. The scheduled voltage was set to 1.01 p.u. for the 2015 Summer Peak and 2025 Summer Peak conditions and to 1.00 p.u. for the 2015 Winter Peak conditions.

GEN-2015-003, GEN-2013-029 Unit 1, and GEN-2013-029 Unit 2 were disabled and the generators were placed at the study project's point of interconnect bus. The generators were modeled with PGEN = 200.0 MW for GEN-2015-003, PGEN = 151.8 MW for GEN-2013-029 Unit 1, and PGEN = 148.0 MW for GEN-2013-029 Unit 2. QMin = -9999 Mvar and QMax = 9999 Mvar for all generators. All buses and transformers connected from the study project's POI bus to the generators were disabled. The scheduled voltage was set to 1.00 p.u. for all study years.

GEN-2015-015 was disabled and a generator was placed at the study project's point of interconnect bus. The generator was modeled with PGEN = 154.6 MW, QMin = -9999 Mvar, and QMax = 9999 Mvar. All buses and transformers connected from the study project's POI bus to GEN-2015-015 were disabled. The scheduled voltage was set to 1.00 p.u. for all study years.

GEN-2015-016 was disabled and a generator was placed at the study project's point of interconnect bus. The generator was modeled with PGEN = 200.0 MW, QMin = -9999 Mvar, and QMax = 9999 Mvar. All buses and transformers connected from the study project's POI bus to GEN-2015-016 were disabled. The scheduled voltage was set to 1.00 p.u. for all study years.

GEN-2015-024 and GEN-2015-025 were disabled and the generators were placed at the study project's point of interconnect bus. The generators were modeled with PGEN=220.0 MW, QMin = -9999 Mvar, and QMax = 9999 Mvar. All buses and transformers connected from the study project's POI bus to the generators were disabled. The scheduled voltage was set to 1.01 p.u. for the 2015 Summer Peak and 2025 Summer Peak conditions and to 1.00 p.u. for the 2015 Winter Peak conditions.

GEN-2015-028 was disabled and a generator was placed at the study project's point of interconnect bus. The generator was modeled with PGEN = 62.79 MW, QMin = -9999 Mvar, and QMax = 9999 Mvar. All buses and transformers connected from the study project's POI bus to GEN-2015-028 were disabled. The scheduled voltage was set to 1.03 p.u. for the 2015

Summer Peak conditions and 1.02 p.u. for the 2015 Winter Peak and 2025 Summer Peak conditions.

GEN-2015-030 was disabled and the generator was placed at the study project's point of interconnect bus. The generator was modeled with PGEN = 200.1 MW, QMin = -9999 Mvar, and QMax = 9999 Mvar. All buses and transformers connected from the study project's POI bus to GEN-2015-030 were disabled. The scheduled voltage was set to 1.01 p.u. for all study years.

5.2 Power Factor Analysis Results

The power factor was calculated for the 2015 Summer Peak, 2015 Winter Peak, and 2025 Summer Peak condition. The following tables show the power factor results for the study generators:

- Table 5-1: Power Factor Analysis for GEN-2015-001
- Table 5-2: Power Factor Analysis for GEN-2015-003
- Table 5-3: Power Factor Analysis for GEN-2015-015
- Table 5-4: Power Factor Analysis for GEN-2015-016
- Table 5-5: Power Factor Analysis for GEN-2015-024
- Table 5-6: Power Factor Analysis for GEN-2015-025
- Table 5-7: Power Factor Analysis for GEN-2015-028
- Table 5-8: Power Factor Analysis for GEN-2015-030

Note that a positive Q (Mvar) output illustrates that the generator is absorbing reactive power from the system, implying a leading power factor; a negative Q (Mvar) illustrates that the generator is supplying reactive power to the system, implying a lagging power factor.

Table 5-1
Power Factor Analysis: GEN-2015-001

Cont. No.	Case	2015 Summer Peak			2015 Winter Peak			2025 Summer Peak		
		Power Factor		Q (MVAR)	Power Factor		Q (MVAR)	Power Factor		Q (MVAR)
0	Base	0.975	Leading	45.51	0.990	Leading	28.64	0.989	Leading	29.97
1	FLT01-3PH	0.996	Leading	16.85	0.981	Leading	39.98	0.996	Leading	18.81
2	FLT02-3PH	0.999	Leading	6.36	0.986	Leading	34.31	0.999	Leading	8.68
3	FLT03-3PH	0.975	Leading	45.51	0.990	Leading	28.64	0.989	Leading	29.97
4	FLT04-3PH	0.968	Leading	52.13	0.980	Leading	40.68	0.987	Leading	31.99
5	FLT05-3PH	0.981	Leading	39.98	0.997	Leading	16.09	0.994	Leading	21.91
6	FLT06-3PH	0.975	Leading	45.51	0.993	Leading	23.40	0.990	Leading	28.36
7	FLT07-3PH	0.975	Leading	45.51	0.990	Leading	28.64	0.989	Leading	29.97
8	FLT08-3PH	0.982	Leading	38.65	0.993	Leading	24.34	0.993	Leading	24.04
9	FLT09-3PH	0.976	Leading	45.10	0.990	Leading	28.17	0.989	Leading	29.69
10	FLT10-3PH	0.979	Leading	41.53	0.994	Leading	22.52	0.991	Leading	26.90
11	FLT11-3PH	0.975	Leading	45.14	0.991	Leading	26.59	0.989	Leading	30.07
12	FLT12-3PH	0.980	Leading	40.64	1.000	Leading	3.87	0.989	Leading	29.99
13	FLT13-3PH	0.957	Leading	60.67	0.989	Leading	29.25	0.989	Leading	30.49
14	FLT14-3PH	0.977	Leading	43.76	0.991	Leading	26.75	0.990	Leading	28.35
15	FLT15-3PH	0.977	Leading	43.53	0.991	Leading	26.38	0.990	Leading	28.38
16	FLT16-3PH	0.976	Leading	44.44	0.991	Leading	27.39	0.990	Leading	29.04
17	FLT17-3PH	N/A	N/A	N/A	N/A	N/A	N/A	0.99	Leading	26.04
18	FLT18-3PH	0.976	Leading	44.87	0.990	Leading	28.29	0.989	Leading	29.63
19	FLT19-3PH	0.975	Leading	45.50	0.990	Leading	28.57	0.989	Leading	29.95
20	FLT20-3PH	0.976	Leading	44.95	0.990	Leading	28.41	0.989	Leading	29.62
21	FLT21-3PH	0.976	Leading	44.68	0.990	Leading	27.94	0.989	Leading	29.88
22	FLT22-3PH	0.976	Leading	44.86	0.991	Leading	27.60	0.989	Leading	29.52
23	FLT23-3PH	0.976	Leading	45.05	0.990	Leading	28.15	0.989	Leading	29.66
24	FLT24-3PH	0.976	Leading	45.05	0.990	Leading	28.33	0.989	Leading	29.34
25	FLT25-3PH	0.975	Leading	45.36	0.990	Leading	28.34	0.989	Leading	29.85
26	FLT26-3PH	0.975	Leading	45.14	0.990	Leading	28.78	0.989	Leading	29.72
27	FLT27-3PH	0.975	Leading	45.52	0.990	Leading	28.60	0.989	Leading	29.97
28	FLT28-3PH	0.975	Leading	45.48	0.990	Leading	28.63	0.989	Leading	29.95
29	FLT29-3PH	0.975	Leading	45.63	0.990	Leading	28.73	0.989	Leading	30.11
30	FLT30-3PH	0.975	Leading	46.01	0.990	Leading	28.92	0.989	Leading	30.47
31	FLT31-3PH	0.978	Leading	42.96	0.991	Leading	26.70	0.992	Leading	26.15
32	FLT32-3PH	0.975	Leading	45.69	0.990	Leading	28.78	0.989	Leading	30.12
33	FLT33-3PH	0.977	Leading	43.54	0.992	Leading	25.63	0.992	Leading	25.79
34	FLT34-3PH	0.972	Leading	48.65	0.989	Leading	29.78	0.986	Leading	33.82
35	FLT35-3PH	0.975	Leading	45.44	0.990	Leading	28.87	0.989	Leading	29.94
36	FLT36-3PH	0.975	Leading	45.33	0.990	Leading	28.28	0.989	Leading	29.80
37	FLT37-3PH	0.975	Leading	45.81	0.990	Leading	29.14	0.989	Leading	30.10
38	FLT38-3PH	0.976	Leading	44.30	0.991	Leading	27.07	0.989	Leading	29.29
39	FLT39-3PH	0.977	Leading	43.77	0.989	Leading	30.20	0.990	Leading	29.05
40	FLT40-3PH	0.975	Leading	45.48	0.990	Leading	28.59	0.989	Leading	29.91

Table 5-1 (Continued)
Power Factor Analysis: GEN-2015-001

Cont. No.	Case	2015 Summer Peak			2015 Winter Peak			2025 Summer Peak		
		Power Factor		Q (MVAR)	Power Factor		Q (MVAR)	Power Factor		Q (MVAR)
41	FLT41-3PH	0.975	Leading	45.43	0.990	Leading	28.62	0.989	Leading	29.88
42	FLT42-3PH	0.975	Leading	45.51	0.990	Leading	28.58	0.989	Leading	29.98
43	FLT43-3PH	0.975	Leading	45.48	0.990	Leading	28.62	0.989	Leading	29.98
44	FLT44-3PH	0.975	Leading	45.56	0.990	Leading	28.64	0.989	Leading	30.01
45	FLT45-3PH	0.975	Leading	45.51	0.990	Leading	28.60	0.989	Leading	29.97
46	FLT46-3PH	0.975	Leading	45.56	0.990	Leading	28.74	0.989	Leading	30.13
47	FLT47-3PH	0.977	Leading	43.81	0.995	Leading	19.47	0.990	Leading	28.72
48	FLT48-3PH	0.975	Leading	45.36	0.990	Leading	28.60	0.989	Leading	29.91
49	FLT49-3PH	0.975	Leading	45.51	0.990	Leading	28.64	0.989	Leading	29.97
50	FLT50-3PH	0.975	Leading	45.54	0.990	Leading	28.66	0.989	Leading	30.03
51	FLT51-3PH	0.975	Leading	45.18	0.990	Leading	28.15	0.989	Leading	29.80
52	FLT52-3PH	0.975	Leading	45.18	0.990	Leading	28.15	0.989	Leading	29.80
53	FLT53-3PH	0.977	Leading	44.13	0.991	Leading	27.51	0.990	Leading	28.96
54	FLT54-3PH	0.975	Leading	45.20	0.990	Leading	28.35	0.989	Leading	29.63
55	FLT55-3PH	0.976	Leading	44.99	0.990	Leading	28.25	0.989	Leading	29.57
56	FLT56-3PH	0.977	Leading	43.77	0.991	Leading	27.31	0.989	Leading	29.45
57	FLT57-3PH	0.976	Leading	44.18	0.991	Leading	27.03	0.989	Leading	29.62

Table 5-2
Power Factor Analysis: GEN-2015-003

Cont. No.	Case	2015 Summer Peak			2015 Winter Peak			2025 Summer Peak		
		Power Factor		Q (MVAR)	Power Factor		Q (MVAR)	Power Factor		Q (MVAR)
0	Base	0.990	Leading	27.83	0.992	Lagging	-25.43	0.987	Leading	32.13
1	FLT01-3PH	0.990	Leading	28.12	0.991	Lagging	-26.50	0.987	Leading	32.16
2	FLT02-3PH	0.991	Leading	27.48	0.991	Lagging	-27.69	0.989	Leading	30.39
3	FLT03-3PH	0.990	Leading	27.83	0.992	Lagging	-25.43	0.987	Leading	32.13
4	FLT04-3PH	0.992	Leading	26.12	0.990	Lagging	-28.16	0.988	Leading	31.33
5	FLT05-3PH	0.991	Leading	27.10	0.991	Lagging	-27.11	0.989	Leading	30.50
6	FLT06-3PH	0.991	Leading	27.67	0.992	Lagging	-26.23	0.988	Leading	31.81
7	FLT07-3PH	0.990	Leading	27.83	0.992	Lagging	-25.43	0.987	Leading	32.13
8	FLT08-3PH	0.993	Leading	24.08	0.989	Lagging	-29.28	0.990	Leading	28.08
9	FLT09-3PH	0.996	Leading	17.62	0.984	Lagging	-36.49	0.992	Leading	26.18
10	FLT10-3PH	1.000	Leading	5.02	0.973	Lagging	-47.20	0.999	Leading	8.66
11	FLT11-3PH	0.993	Leading	23.61	0.994	Leading	22.01	0.995	Leading	20.49
12	FLT12-3PH	0.979	Lagging	-41.79	0.898	Lagging	-98.03	1.000	Leading	1.52
13	FLT13-3PH	0.995	Leading	19.08	0.991	Lagging	-27.24	0.989	Leading	29.55
14	FLT14-3PH	0.992	Leading	24.82	0.990	Lagging	-29.14	0.989	Leading	29.73
15	FLT15-3PH	0.993	Leading	23.97	0.989	Lagging	-30.28	0.989	Leading	29.30
16	FLT16-3PH	0.991	Leading	26.49	0.991	Lagging	-27.28	0.988	Leading	30.99
17	FLT17-3PH	N/A	N/A	N/A	N/A	N/A	N/A	0.989	Leading	29.431
18	FLT18-3PH	0.995	Leading	19.99	0.987	Lagging	-32.91	0.988	Leading	31.84
19	FLT19-3PH	0.991	Leading	27.42	0.992	Lagging	-24.67	0.988	Leading	31.85
20	FLT20-3PH	0.994	Leading	21.21	0.988	Lagging	-31.35	0.990	Leading	27.81
21	FLT21-3PH	0.990	Leading	28.80	0.993	Lagging	-24.48	0.987	Leading	32.25
22	FLT22-3PH	0.993	Leading	24.33	0.989	Lagging	-29.95	0.990	Leading	29.08
23	FLT23-3PH	0.994	Leading	21.85	0.987	Lagging	-33.10	0.989	Leading	29.73
24	FLT24-3PH	0.991	Leading	27.66	0.992	Lagging	-25.53	0.987	Leading	31.94
25	FLT25-3PH	0.990	Leading	27.86	0.992	Lagging	-25.47	0.987	Leading	32.14
26	FLT26-3PH	0.990	Leading	27.78	0.992	Lagging	-25.38	0.987	Leading	32.06
27	FLT27-3PH	0.990	Leading	27.83	0.992	Lagging	-25.45	0.987	Leading	32.13
28	FLT28-3PH	0.990	Leading	27.83	0.992	Lagging	-25.43	0.987	Leading	32.13
29	FLT29-3PH	0.990	Leading	27.84	0.992	Lagging	-25.43	0.987	Leading	32.15
30	FLT30-3PH	0.990	Leading	27.87	0.992	Lagging	-25.42	0.987	Leading	32.20
31	FLT31-3PH	0.991	Leading	27.21	0.992	Lagging	-25.84	0.988	Leading	31.21
32	FLT32-3PH	0.990	Leading	27.87	0.992	Lagging	-25.42	0.987	Leading	32.17
33	FLT33-3PH	0.993	Leading	24.49	0.988	Lagging	-30.93	0.992	Leading	25.92
34	FLT34-3PH	0.986	Leading	33.37	0.995	Lagging	-19.94	0.983	Leading	37.59
35	FLT35-3PH	0.990	Leading	27.84	0.992	Lagging	-25.00	0.987	Leading	32.14
36	FLT36-3PH	0.991	Leading	27.56	0.992	Lagging	-26.00	0.988	Leading	31.90
37	FLT37-3PH	0.991	Leading	27.44	0.992	Lagging	-25.42	0.988	Leading	31.67
38	FLT38-3PH	0.992	Leading	25.75	0.990	Lagging	-28.35	0.988	Leading	30.90
39	FLT39-3PH	0.991	Leading	27.63	0.992	Lagging	-25.55	0.988	Leading	31.75
40	FLT40-3PH	0.992	Leading	26.05	0.991	Lagging	-27.06	0.989	Leading	30.06

Table 5-2 (Continued)
Power Factor Analysis: GEN-2015-003

Cont. No.	Case	2015 Summer Peak			2015 Winter Peak			2025 Summer Peak		
		Power Factor		Q (MVAR)	Power Factor		Q (MVAR)	Power Factor		Q (MVAR)
41	FLT41-3PH	0.992	Leading	25.23	0.990	Lagging	-28.29	0.989	Leading	30.09
42	FLT42-3PH	0.990	Leading	28.57	0.992	Lagging	-25.31	0.987	Leading	33.05
43	FLT43-3PH	0.990	Leading	27.95	0.993	Lagging	-24.59	0.987	Leading	33.00
44	FLT44-3PH	0.990	Leading	28.32	0.992	Lagging	-25.27	0.987	Leading	32.60
45	FLT45-3PH	0.990	Leading	27.78	0.992	Lagging	-25.76	0.987	Leading	32.13
46	FLT46-3PH	0.990	Leading	27.89	0.992	Lagging	-24.79	0.987	Leading	33.13
47	FLT47-3PH	0.991	Leading	26.39	0.993	Lagging	-23.85	0.992	Leading	25.58
48	FLT48-3PH	0.990	Leading	28.01	0.991	Lagging	-26.55	0.987	Leading	33.14
49	FLT49-3PH	0.990	Leading	27.83	0.992	Lagging	-25.43	0.987	Leading	32.13
50	FLT50-3PH	0.990	Leading	27.84	0.992	Lagging	-25.43	0.987	Leading	32.15
51	FLT51-3PH	0.990	Leading	27.77	0.992	Lagging	-25.55	0.987	Leading	32.08
52	FLT52-3PH	0.990	Leading	27.77	0.992	Lagging	-25.55	0.987	Leading	32.08
53	FLT53-3PH	0.991	Leading	27.70	0.992	Lagging	-25.58	0.988	Leading	31.91
54	FLT54-3PH	0.990	Leading	27.81	0.992	Lagging	-25.48	0.987	Leading	32.03
55	FLT55-3PH	0.991	Leading	27.76	0.992	Lagging	-25.50	0.987	Leading	32.02
56	FLT56-3PH	0.990	Leading	28.18	0.992	Lagging	-25.25	0.987	Leading	32.21
57	FLT57-3PH	0.990	Leading	28.00	0.992	Lagging	-25.44	0.987	Leading	32.13

Table 5-3
Power Factor Analysis: GEN-2015-015

Cont. No.	Case	2015 Summer Peak			2015 Winter Peak			2025 Summer Peak		
		Power Factor		Q (MVAR)	Power Factor		Q (MVAR)	Power Factor		Q (MVAR)
0	Base	0.996	Leading	14.67	0.999	Leading	6.05	0.997	Leading	12.74
1	FLT01-3PH	0.995	Leading	14.89	0.999	Leading	5.37	0.997	Leading	12.84
2	FLT02-3PH	0.996	Leading	13.66	1.000	Leading	3.76	0.997	Leading	11.34
3	FLT03-3PH	0.996	Leading	14.67	0.999	Leading	6.05	0.997	Leading	12.74
4	FLT04-3PH	0.996	Leading	14.20	0.999	Leading	5.52	0.997	Leading	12.49
5	FLT05-3PH	0.996	Leading	14.06	1.000	Leading	4.65	0.997	Leading	11.87
6	FLT06-3PH	0.996	Leading	14.65	0.999	Leading	5.54	0.997	Leading	12.63
7	FLT07-3PH	0.996	Leading	14.67	0.999	Leading	6.05	0.997	Leading	12.74
8	FLT08-3PH	0.997	Leading	12.83	1.000	Leading	4.82	0.998	Leading	10.80
9	FLT09-3PH	0.998	Leading	10.61	1.000	Leading	0.50	0.998	Leading	10.58
10	FLT10-3PH	1.000	Lagging	-2.80	0.987	Lagging	-25.66	1.000	Lagging	-0.68
11	FLT11-3PH	0.997	Leading	11.67	0.993	Leading	18.90	0.999	Leading	6.68
12	FLT12-3PH	0.946	Lagging	-53.08	0.959	Lagging	-45.62	0.991	Lagging	-20.81
13	FLT13-3PH	0.997	Leading	11.88	0.999	Leading	5.11	0.997	Leading	11.80
14	FLT14-3PH	0.996	Leading	13.55	0.999	Leading	5.19	0.997	Leading	11.90
15	FLT15-3PH	0.996	Leading	13.22	1.000	Leading	4.77	0.997	Leading	11.82
16	FLT16-3PH	0.996	Leading	14.14	0.999	Leading	5.30	0.997	Leading	12.31
17	FLT17-3PH	N/A	N/A	N/A	N/A	N/A	N/A	0.998	Leading	10.57
18	FLT18-3PH	0.997	Leading	12.71	0.991	Leading	21.30	0.999	Lagging	-6.25
19	FLT19-3PH	0.995	Leading	15.01	0.995	Leading	14.83	0.997	Leading	11.70
20	FLT20-3PH	0.999	Leading	8.47	1.000	Lagging	-0.30	0.998	Leading	10.43
21	FLT21-3PH	0.991	Leading	21.44	0.997	Leading	11.49	0.996	Leading	13.76
22	FLT22-3PH	1.000	Leading	1.75	0.997	Lagging	-11.15	1.000	Leading	1.74
23	FLT23-3PH	0.999	Leading	6.18	0.999	Lagging	-4.94	0.998	Leading	9.15
24	FLT24-3PH	0.996	Leading	14.58	0.999	Leading	6.00	0.997	Leading	12.68
25	FLT25-3PH	0.996	Leading	14.67	0.999	Leading	5.99	0.997	Leading	12.71
26	FLT26-3PH	0.996	Leading	14.59	0.999	Leading	6.07	0.997	Leading	12.69
27	FLT27-3PH	0.996	Leading	14.67	0.999	Leading	6.05	0.997	Leading	12.75
28	FLT28-3PH	0.996	Leading	14.66	0.999	Leading	6.05	0.997	Leading	12.74
29	FLT29-3PH	0.996	Leading	14.67	0.999	Leading	6.06	0.997	Leading	12.75
30	FLT30-3PH	0.996	Leading	14.71	0.999	Leading	6.08	0.997	Leading	12.79
31	FLT31-3PH	0.996	Leading	14.34	0.999	Leading	5.81	0.997	Leading	12.39
32	FLT32-3PH	0.996	Leading	14.69	0.999	Leading	6.06	0.997	Leading	12.76
33	FLT33-3PH	0.996	Leading	13.41	1.000	Leading	4.50	0.998	Leading	10.59
34	FLT34-3PH	0.994	Leading	16.62	0.999	Leading	7.44	0.996	Leading	14.67
35	FLT35-3PH	0.996	Leading	14.66	0.999	Leading	6.21	0.997	Leading	12.74
36	FLT36-3PH	0.996	Leading	14.57	0.999	Leading	5.83	0.997	Leading	12.66
37	FLT37-3PH	0.996	Leading	14.49	0.999	Leading	6.10	0.997	Leading	12.68
38	FLT38-3PH	0.996	Leading	13.90	0.999	Leading	4.95	0.997	Leading	12.35
39	FLT39-3PH	0.996	Leading	14.54	0.999	Leading	5.31	0.997	Leading	12.51
40	FLT40-3PH	0.996	Leading	13.55	1.000	Leading	4.88	0.997	Leading	11.22

Table 5-3 (Continued)
Power Factor Analysis: GEN-2015-015

Cont. No.	Case	2015 Summer Peak			2015 Winter Peak			2025 Summer Peak		
		Power Factor		Q (MVAR)	Power Factor		Q (MVAR)	Power Factor		Q (MVAR)
41	FLT41-3PH	0.997	Leading	12.73	1.000	Leading	3.14	0.998	Leading	9.75
42	FLT42-3PH	0.995	Leading	15.74	0.999	Leading	5.77	0.996	Leading	14.05
43	FLT43-3PH	0.996	Leading	13.80	0.999	Leading	5.75	0.997	Leading	12.65
44	FLT44-3PH	0.993	Leading	18.60	0.999	Leading	8.29	0.995	Leading	16.18
45	FLT45-3PH	0.995	Leading	15.64	0.999	Leading	5.66	0.996	Leading	13.55
46	FLT46-3PH	0.993	Leading	18.26	0.996	Leading	14.11	0.988	Leading	24.59
47	FLT47-3PH	0.996	Leading	12.99	1.000	Leading	4.46	0.998	Leading	9.97
48	FLT48-3PH	0.996	Leading	14.34	0.999	Leading	6.49	0.997	Leading	12.57
49	FLT49-3PH	0.996	Leading	14.67	0.999	Leading	6.05	0.997	Leading	12.74
50	FLT50-3PH	0.996	Leading	14.67	0.999	Leading	6.06	0.997	Leading	12.76
51	FLT51-3PH	0.996	Leading	14.55	0.999	Leading	5.84	0.997	Leading	12.66
52	FLT52-3PH	0.996	Leading	14.55	0.999	Leading	5.84	0.997	Leading	12.66
53	FLT53-3PH	0.996	Leading	14.51	0.999	Leading	5.92	0.997	Leading	12.57
54	FLT54-3PH	0.996	Leading	14.55	0.999	Leading	5.98	0.997	Leading	12.57
55	FLT55-3PH	0.996	Leading	14.60	0.999	Leading	5.99	0.997	Leading	12.68
56	FLT56-3PH	0.996	Leading	14.58	0.999	Leading	5.90	0.997	Leading	12.65
57	FLT57-3PH	0.996	Leading	14.60	0.999	Leading	5.86	0.997	Leading	12.69

Table 5-4
Power Factor Analysis: GEN-2015-016

Cont. No.	Case	2015 Summer Peak			2015 Winter Peak			2025 Summer Peak		
		Power Factor		Q (MVAR)	Power Factor		Q (MVAR)	Power Factor		Q (MVAR)
0	Base	0.984	Leading	36.01	0.981	Leading	39.60	0.986	Leading	33.94
1	FLT01-3PH	0.984	Leading	36.08	0.982	Leading	39.00	0.986	Leading	33.70
2	FLT02-3PH	0.983	Leading	37.31	0.981	Leading	39.53	0.985	Leading	34.98
3	FLT03-3PH	0.984	Leading	36.01	0.981	Leading	39.60	0.986	Leading	33.94
4	FLT04-3PH	0.984	Leading	36.47	0.980	Leading	40.21	0.986	Leading	34.04
5	FLT05-3PH	0.985	Leading	34.92	0.982	Leading	38.95	0.987	Leading	32.46
6	FLT06-3PH	0.985	Leading	35.48	0.980	Leading	40.75	0.986	Leading	34.03
7	FLT07-3PH	0.984	Leading	36.01	0.981	Leading	39.60	0.986	Leading	33.94
8	FLT08-3PH	0.985	Leading	34.66	0.982	Leading	38.87	0.987	Leading	32.10
9	FLT09-3PH	0.984	Leading	35.94	0.981	Leading	39.52	0.986	Leading	33.89
10	FLT10-3PH	0.985	Leading	35.35	0.981	Leading	39.05	0.986	Leading	33.25
11	FLT11-3PH	0.984	Leading	35.95	0.981	Leading	39.43	0.986	Leading	34.08
12	FLT12-3PH	0.984	Leading	36.44	0.981	Leading	39.62	0.986	Leading	34.09
13	FLT13-3PH	0.982	Leading	38.80	0.980	Leading	40.36	0.985	Leading	35.09
14	FLT14-3PH	0.985	Leading	35.20	0.982	Leading	38.73	0.986	Leading	33.71
15	FLT15-3PH	0.986	Leading	33.51	0.983	Leading	37.10	0.987	Leading	32.51
16	FLT16-3PH	0.984	Leading	36.04	0.981	Leading	39.58	0.986	Leading	33.94
17	FLT17-3PH	N/A	N/A	N/A	N/A	N/A	N/A	0.99	Leading	34.15
18	FLT18-3PH	0.984	Leading	35.96	0.981	Leading	39.62	0.986	Leading	33.85
19	FLT19-3PH	0.984	Leading	35.99	0.981	Leading	39.56	0.986	Leading	33.93
20	FLT20-3PH	0.984	Leading	36.04	0.981	Leading	39.68	0.986	Leading	33.93
21	FLT21-3PH	0.984	Leading	35.95	0.981	Leading	39.53	0.986	Leading	33.92
22	FLT22-3PH	0.984	Leading	35.87	0.981	Leading	39.48	0.986	Leading	33.82
23	FLT23-3PH	0.984	Leading	35.89	0.981	Leading	39.51	0.986	Leading	33.80
24	FLT24-3PH	0.997	Leading	15.57	0.994	Leading	22.64	0.997	Leading	16.55
25	FLT25-3PH	0.994	Leading	22.15	0.996	Leading	18.59	0.996	Leading	17.23
26	FLT26-3PH	0.981	Leading	39.39	0.968	Leading	51.73	0.980	Leading	40.10
27	FLT27-3PH	0.981	Leading	40.04	0.980	Leading	40.11	0.981	Leading	39.12
28	FLT28-3PH	0.985	Leading	35.24	0.981	Leading	39.32	0.987	Leading	33.09
29	FLT29-3PH	0.991	Leading	27.69	0.990	Leading	29.20	0.993	Leading	24.13
30	FLT30-3PH	0.988	Leading	31.06	0.984	Leading	35.98	0.990	Leading	28.91
31	FLT31-3PH	0.986	Leading	33.74	0.983	Leading	37.10	0.988	Leading	31.32
32	FLT32-3PH	0.971	Leading	49.50	0.968	Leading	52.03	0.975	Leading	45.67
33	FLT33-3PH	0.986	Leading	33.68	0.983	Leading	37.69	0.987	Leading	32.40
34	FLT34-3PH	0.984	Leading	36.42	0.981	Leading	39.94	0.986	Leading	34.31
35	FLT35-3PH	0.984	Leading	35.89	0.981	Leading	39.76	0.986	Leading	33.85
36	FLT36-3PH	0.984	Leading	35.71	0.981	Leading	39.37	0.986	Leading	33.72
37	FLT37-3PH	0.987	Leading	32.47	0.983	Leading	37.89	0.988	Leading	30.84
38	FLT38-3PH	0.985	Leading	35.23	0.982	Leading	38.93	0.987	Leading	33.19
39	FLT39-3PH	0.984	Leading	35.87	0.981	Leading	39.56	0.986	Leading	33.81
40	FLT40-3PH	0.984	Leading	36.00	0.981	Leading	39.59	0.986	Leading	33.93

Table 5-4 (Continued)
Power Factor Analysis: GEN-2015-016

Cont. No.	Case	2015 Summer Peak			2015 Winter Peak			2025 Summer Peak		
		Power Factor		Q (MVAR)	Power Factor		Q (MVAR)	Power Factor		Q (MVAR)
41	FLT41-3PH	0.984	Leading	36.03	0.981	Leading	39.63	0.986	Leading	33.94
42	FLT42-3PH	0.984	Leading	35.99	0.981	Leading	39.59	0.986	Leading	33.91
43	FLT43-3PH	0.984	Leading	36.00	0.981	Leading	39.60	0.986	Leading	33.93
44	FLT44-3PH	0.984	Leading	36.01	0.981	Leading	39.60	0.986	Leading	33.94
45	FLT45-3PH	0.984	Leading	36.01	0.981	Leading	39.60	0.986	Leading	33.93
46	FLT46-3PH	0.984	Leading	36.00	0.981	Leading	39.60	0.986	Leading	33.93
47	FLT47-3PH	0.985	Leading	35.17	0.982	Leading	38.90	0.986	Leading	33.23
48	FLT48-3PH	0.984	Leading	35.97	0.981	Leading	39.60	0.986	Leading	33.89
49	FLT49-3PH	0.984	Leading	36.01	0.981	Leading	39.60	0.986	Leading	33.94
50	FLT50-3PH	0.984	Leading	36.11	0.981	Leading	39.68	0.986	Leading	34.14
51	FLT51-3PH	0.986	Leading	34.42	0.983	Leading	37.11	0.987	Leading	32.99
52	FLT52-3PH	0.986	Leading	34.42	0.983	Leading	37.11	0.987	Leading	32.99
53	FLT53-3PH	0.987	Leading	32.28	0.985	Leading	35.46	0.988	Leading	31.14
54	FLT54-3PH	0.984	Leading	36.20	0.981	Leading	39.10	0.986	Leading	33.82
55	FLT55-3PH	0.986	Leading	34.05	0.983	Leading	37.90	0.987	Leading	32.51
56	FLT56-3PH	0.983	Leading	37.65	0.981	Leading	39.44	0.985	Leading	35.36
57	FLT57-3PH	0.984	Leading	36.24	0.983	Leading	37.70	0.986	Leading	34.10

Table 5-5
Power Factor Analysis: GEN-2015-024

Cont. No.	Case	2015 Summer Peak			2015 Winter Peak			2025 Summer Peak		
		Power Factor		Q (MVAR)	Power Factor		Q (MVAR)	Power Factor		Q (MVAR)
0	Base	0.979	Lagging	-45.57	0.762	Lagging	-187.12	0.981	Lagging	-43.38
1	FLT01-3PH	0.982	Lagging	-42.28	0.746	Lagging	-196.11	0.981	Lagging	-43.00
2	FLT02-3PH	0.972	Lagging	-53.52	0.715	Lagging	-215.20	0.973	Lagging	-52.36
3	FLT03-3PH	0.979	Lagging	-45.57	0.762	Lagging	-187.12	0.981	Lagging	-43.38
4	FLT04-3PH	0.963	Lagging	-61.31	0.731	Lagging	-205.55	0.973	Lagging	-51.96
5	FLT05-3PH	0.971	Lagging	-54.16	0.728	Lagging	-207.33	0.968	Lagging	-56.69
6	FLT06-3PH	0.979	Lagging	-45.90	0.751	Lagging	-193.66	0.980	Lagging	-45.18
7	FLT07-3PH	0.979	Lagging	-45.57	0.762	Lagging	-187.12	0.981	Lagging	-43.38
8	FLT08-3PH	0.967	Lagging	-57.57	0.740	Lagging	-200.02	0.972	Lagging	-53.10
9	FLT09-3PH	0.975	Lagging	-50.44	0.751	Lagging	-193.21	0.979	Lagging	-45.44
10	FLT10-3PH	0.914	Lagging	-97.92	0.655	Lagging	-253.79	0.947	Lagging	-74.89
11	FLT11-3PH	0.976	Lagging	-49.16	0.724	Lagging	-209.32	0.984	Lagging	-39.56
12	FLT12-3PH	1.000	Lagging	-3.92	0.883	Lagging	-117.13	0.995	Lagging	-22.38
13	FLT13-3PH	0.897	Lagging	-108.42	0.780	Lagging	-176.70	0.968	Lagging	-56.74
14	FLT14-3PH	0.952	Lagging	-70.77	0.726	Lagging	-208.62	0.957	Lagging	-67.00
15	FLT15-3PH	0.951	Lagging	-71.81	0.722	Lagging	-210.71	0.957	Lagging	-66.40
16	FLT16-3PH	0.979	Lagging	-45.57	0.762	Lagging	-187.12	0.981	Lagging	-43.38
17	FLT17-3PH	N/A	N/A	N/A	N/A	N/A	N/A	0.960	Lagging	-64.20
18	FLT18-3PH	0.969	Lagging	-56.16	0.745	Lagging	-196.80	0.977	Lagging	-47.79
19	FLT19-3PH	0.980	Lagging	-44.71	0.762	Lagging	-186.91	0.982	Lagging	-42.54
20	FLT20-3PH	0.972	Lagging	-52.99	0.751	Lagging	-193.54	0.978	Lagging	-47.23
21	FLT21-3PH	0.978	Lagging	-46.70	0.759	Lagging	-188.97	0.981	Lagging	-43.47
22	FLT22-3PH	0.977	Lagging	-48.53	0.752	Lagging	-193.04	0.979	Lagging	-45.65
23	FLT23-3PH	0.973	Lagging	-52.56	0.748	Lagging	-194.99	0.978	Lagging	-47.39
24	FLT24-3PH	0.979	Lagging	-45.54	0.762	Lagging	-186.83	0.981	Lagging	-43.83
25	FLT25-3PH	0.978	Lagging	-47.04	0.758	Lagging	-189.46	0.980	Lagging	-44.28
26	FLT26-3PH	0.979	Lagging	-46.10	0.762	Lagging	-186.73	0.981	Lagging	-43.77
27	FLT27-3PH	0.979	Lagging	-45.49	0.762	Lagging	-187.06	0.981	Lagging	-43.31
28	FLT28-3PH	0.979	Lagging	-45.62	0.762	Lagging	-187.14	0.981	Lagging	-43.42
29	FLT29-3PH	0.979	Lagging	-45.56	0.762	Lagging	-187.06	0.981	Lagging	-43.28
30	FLT30-3PH	0.980	Lagging	-44.99	0.763	Lagging	-186.63	0.982	Lagging	-42.75
31	FLT31-3PH	0.977	Lagging	-47.78	0.757	Lagging	-189.63	0.977	Lagging	-47.61
32	FLT32-3PH	0.979	Lagging	-45.56	0.761	Lagging	-187.32	0.981	Lagging	-43.30
33	FLT33-3PH	0.955	Lagging	-68.08	0.702	Lagging	-223.29	0.911	Lagging	-99.54
34	FLT34-3PH	1.000	Leading	3.45	0.831	Lagging	-147.27	0.999	Leading	10.51
35	FLT35-3PH	0.979	Lagging	-45.37	0.770	Lagging	-182.58	0.982	Lagging	-42.76
36	FLT36-3PH	0.977	Lagging	-47.84	0.754	Lagging	-191.80	0.979	Lagging	-45.82
37	FLT37-3PH	0.984	Lagging	-40.10	0.776	Lagging	-179.03	0.983	Lagging	-40.59
38	FLT38-3PH	0.960	Lagging	-63.87	0.723	Lagging	-210.03	0.971	Lagging	-53.99
39	FLT39-3PH	0.977	Lagging	-48.40	0.754	Lagging	-191.83	0.979	Lagging	-45.51
40	FLT40-3PH	0.979	Lagging	-46.03	0.761	Lagging	-187.70	0.981	Lagging	-43.96

Table 5-5 (Continued)
Power Factor Analysis: GEN-2015-024

Cont. No.	Case	2015 Summer Peak			2015 Winter Peak			2025 Summer Peak		
		Power Factor		Q (MVAR)	Power Factor		Q (MVAR)	Power Factor		Q (MVAR)
41	FLT41-3PH	0.978	Lagging	-47.29	0.759	Lagging	-188.77	0.980	Lagging	-44.47
42	FLT42-3PH	0.979	Lagging	-45.88	0.761	Lagging	-187.74	0.981	Lagging	-43.40
43	FLT43-3PH	0.979	Lagging	-46.17	0.761	Lagging	-187.39	0.981	Lagging	-43.39
44	FLT44-3PH	0.979	Lagging	-45.46	0.762	Lagging	-187.19	0.981	Lagging	-43.22
45	FLT45-3PH	0.979	Lagging	-45.75	0.761	Lagging	-187.51	0.981	Lagging	-43.45
46	FLT46-3PH	0.979	Lagging	-45.52	0.763	Lagging	-186.53	0.982	Lagging	-42.76
47	FLT47-3PH	0.964	Lagging	-60.67	0.734	Lagging	-203.64	0.971	Lagging	-54.41
48	FLT48-3PH	0.978	Lagging	-47.13	0.759	Lagging	-188.73	0.981	Lagging	-43.91
49	FLT49-3PH	0.979	Lagging	-45.57	0.762	Lagging	-187.12	0.981	Lagging	-43.38
50	FLT50-3PH	0.979	Lagging	-45.53	0.762	Lagging	-187.07	0.981	Lagging	-43.29
51	FLT51-3PH	0.979	Lagging	-46.18	0.759	Lagging	-188.50	0.981	Lagging	-43.72
52	FLT52-3PH	0.979	Lagging	-46.18	0.759	Lagging	-188.50	0.981	Lagging	-43.72
53	FLT53-3PH	0.977	Lagging	-48.25	0.756	Lagging	-190.57	0.979	Lagging	-45.38
54	FLT54-3PH	0.979	Lagging	-46.37	0.760	Lagging	-188.12	0.980	Lagging	-44.18
55	FLT55-3PH	0.978	Lagging	-46.63	0.760	Lagging	-188.43	0.980	Lagging	-44.24
56	FLT56-3PH	0.976	Lagging	-49.43	0.754	Lagging	-191.41	0.980	Lagging	-44.81
57	FLT57-3PH	0.977	Lagging	-48.30	0.755	Lagging	-191.32	0.980	Lagging	-44.14

Table 5-6
Power Factor Analysis: GEN-2015-025

Cont. No.	Case	2015 Summer Peak			2015 Winter Peak			2025 Summer Peak		
		Power Factor		Q (MVAR)	Power Factor		Q (MVAR)	Power Factor		Q (MVAR)
0	Base	0.979	Lagging	-45.57	0.762	Lagging	-187.12	0.981	Lagging	-43.38
1	FLT01-3PH	0.982	Lagging	-42.28	0.746	Lagging	-196.11	0.981	Lagging	-43.00
2	FLT02-3PH	0.972	Lagging	-53.52	0.715	Lagging	-215.20	0.973	Lagging	-52.36
3	FLT03-3PH	0.979	Lagging	-45.57	0.762	Lagging	-187.12	0.981	Lagging	-43.38
4	FLT04-3PH	0.963	Lagging	-61.31	0.731	Lagging	-205.55	0.973	Lagging	-51.96
5	FLT05-3PH	0.971	Lagging	-54.16	0.728	Lagging	-207.33	0.968	Lagging	-56.69
6	FLT06-3PH	0.979	Lagging	-45.90	0.751	Lagging	-193.66	0.980	Lagging	-45.18
7	FLT07-3PH	0.979	Lagging	-45.57	0.762	Lagging	-187.12	0.981	Lagging	-43.38
8	FLT08-3PH	0.967	Lagging	-57.57	0.740	Lagging	-200.02	0.972	Lagging	-53.10
9	FLT09-3PH	0.975	Lagging	-50.44	0.751	Lagging	-193.21	0.979	Lagging	-45.44
10	FLT10-3PH	0.914	Lagging	-97.92	0.655	Lagging	-253.79	0.947	Lagging	-74.89
11	FLT11-3PH	0.976	Lagging	-49.16	0.724	Lagging	-209.32	0.984	Lagging	-39.56
12	FLT12-3PH	1.000	Lagging	-3.92	0.883	Lagging	-117.13	0.995	Lagging	-22.38
13	FLT13-3PH	0.897	Lagging	-108.42	0.780	Lagging	-176.69	0.968	Lagging	-56.74
14	FLT14-3PH	0.952	Lagging	-70.77	0.726	Lagging	-208.62	0.957	Lagging	-67.00
15	FLT15-3PH	0.951	Lagging	-71.81	0.722	Lagging	-210.71	0.957	Lagging	-66.40
16	FLT16-3PH	0.979	Lagging	-45.57	0.762	Lagging	-187.12	0.981	Lagging	-43.38
17	FLT17-3PH	N/A	N/A	N/A	N/A	N/A	N/A	0.960	Lagging	-64.20
18	FLT18-3PH	0.969	Lagging	-56.16	0.745	Lagging	-196.80	0.977	Lagging	-47.79
19	FLT19-3PH	0.980	Lagging	-44.71	0.762	Lagging	-186.91	0.982	Lagging	-42.54
20	FLT20-3PH	0.972	Lagging	-52.99	0.751	Lagging	-193.54	0.978	Lagging	-47.23
21	FLT21-3PH	0.978	Lagging	-46.70	0.759	Lagging	-188.97	0.981	Lagging	-43.47
22	FLT22-3PH	0.977	Lagging	-48.53	0.752	Lagging	-193.04	0.979	Lagging	-45.65
23	FLT23-3PH	0.973	Lagging	-52.56	0.748	Lagging	-194.99	0.978	Lagging	-47.39
24	FLT24-3PH	0.979	Lagging	-45.54	0.762	Lagging	-186.83	0.981	Lagging	-43.83
25	FLT25-3PH	0.978	Lagging	-47.04	0.758	Lagging	-189.46	0.980	Lagging	-44.28
26	FLT26-3PH	0.979	Lagging	-46.10	0.762	Lagging	-186.73	0.981	Lagging	-43.77
27	FLT27-3PH	0.979	Lagging	-45.49	0.762	Lagging	-187.06	0.981	Lagging	-43.31
28	FLT28-3PH	0.979	Lagging	-45.62	0.762	Lagging	-187.14	0.981	Lagging	-43.42
29	FLT29-3PH	0.979	Lagging	-45.56	0.762	Lagging	-187.06	0.981	Lagging	-43.28
30	FLT30-3PH	0.980	Lagging	-44.99	0.763	Lagging	-186.63	0.982	Lagging	-42.75
31	FLT31-3PH	0.977	Lagging	-47.78	0.757	Lagging	-189.63	0.977	Lagging	-47.61
32	FLT32-3PH	0.979	Lagging	-45.56	0.761	Lagging	-187.32	0.981	Lagging	-43.30
33	FLT33-3PH	0.955	Lagging	-68.08	0.702	Lagging	-223.29	0.911	Lagging	-99.54
34	FLT34-3PH	1.000	Leading	3.45	0.831	Lagging	-147.27	0.999	Leading	10.51
35	FLT35-3PH	0.979	Lagging	-45.37	0.770	Lagging	-182.58	0.982	Lagging	-42.76
36	FLT36-3PH	0.977	Lagging	-47.84	0.754	Lagging	-191.80	0.979	Lagging	-45.82
37	FLT37-3PH	0.984	Lagging	-40.10	0.776	Lagging	-179.03	0.983	Lagging	-40.59
38	FLT38-3PH	0.960	Lagging	-63.87	0.723	Lagging	-210.03	0.971	Lagging	-53.99
39	FLT39-3PH	0.977	Lagging	-48.40	0.754	Lagging	-191.83	0.979	Lagging	-45.51
40	FLT40-3PH	0.979	Lagging	-46.03	0.761	Lagging	-187.70	0.981	Lagging	-43.96

Table 5-6 (Continued)
Power Factor Analysis: GEN-2015-025

Cont. No.	Case	2015 Summer Peak			2015 Winter Peak			2025 Summer Peak		
		Power Factor		Q (MVAR)	Power Factor		Q (MVAR)	Power Factor		Q (MVAR)
41	FLT41-3PH	0.978	Lagging	-47.29	0.759	Lagging	-188.77	0.980	Lagging	-44.47
42	FLT42-3PH	0.979	Lagging	-45.88	0.761	Lagging	-187.74	0.981	Lagging	-43.40
43	FLT43-3PH	0.979	Lagging	-46.17	0.761	Lagging	-187.38	0.981	Lagging	-43.39
44	FLT44-3PH	0.979	Lagging	-45.46	0.762	Lagging	-187.19	0.981	Lagging	-43.22
45	FLT45-3PH	0.979	Lagging	-45.75	0.761	Lagging	-187.51	0.981	Lagging	-43.45
46	FLT46-3PH	0.979	Lagging	-45.52	0.763	Lagging	-186.53	0.982	Lagging	-42.76
47	FLT47-3PH	0.964	Lagging	-60.67	0.734	Lagging	-203.64	0.971	Lagging	-54.41
48	FLT48-3PH	0.978	Lagging	-47.13	0.759	Lagging	-188.73	0.981	Lagging	-43.91
49	FLT49-3PH	0.979	Lagging	-45.57	0.762	Lagging	-187.12	0.981	Lagging	-43.38
50	FLT50-3PH	0.979	Lagging	-45.53	0.762	Lagging	-187.07	0.981	Lagging	-43.29
51	FLT51-3PH	0.979	Lagging	-46.18	0.759	Lagging	-188.50	0.981	Lagging	-43.72
52	FLT52-3PH	0.979	Lagging	-46.18	0.759	Lagging	-188.50	0.981	Lagging	-43.72
53	FLT53-3PH	0.977	Lagging	-48.25	0.756	Lagging	-190.57	0.979	Lagging	-45.38
54	FLT54-3PH	0.979	Lagging	-46.37	0.760	Lagging	-188.12	0.980	Lagging	-44.18
55	FLT55-3PH	0.978	Lagging	-46.63	0.760	Lagging	-188.43	0.980	Lagging	-44.24
56	FLT56-3PH	0.976	Lagging	-49.43	0.754	Lagging	-191.41	0.980	Lagging	-44.81
57	FLT57-3PH	0.977	Lagging	-48.30	0.755	Lagging	-191.32	0.980	Lagging	-44.14

Table 5-7
Power Factor Analysis: GEN-2015-028

Cont. No.	Case	2015 Summer Peak			2015 Winter Peak			2025 Summer Peak		
		Power Factor		Q (MVAR)	Power Factor		Q (MVAR)	Power Factor		Q (MVAR)
0	Base	0.980	Leading	12.74	0.993	Leading	7.57	0.993	Leading	7.40
1	FLT01-3PH	0.980	Leading	12.81	0.993	Leading	7.42	0.993	Leading	7.47
2	FLT02-3PH	0.982	Leading	12.24	0.994	Leading	6.78	0.994	Leading	6.81
3	FLT03-3PH	0.980	Leading	12.74	0.993	Leading	7.57	0.993	Leading	7.40
4	FLT04-3PH	0.980	Leading	12.65	0.993	Leading	7.47	0.993	Leading	7.35
5	FLT05-3PH	0.981	Leading	12.57	0.994	Leading	7.18	0.994	Leading	7.17
6	FLT06-3PH	0.980	Leading	12.75	0.993	Leading	7.44	0.993	Leading	7.39
7	FLT07-3PH	0.980	Leading	12.74	0.993	Leading	7.57	0.993	Leading	7.40
8	FLT08-3PH	0.982	Leading	12.23	0.993	Leading	7.21	0.994	Leading	6.85
9	FLT09-3PH	0.983	Leading	11.70	0.995	Leading	6.12	0.994	Leading	6.83
10	FLT10-3PH	0.989	Leading	9.39	1.000	Leading	0.66	0.997	Leading	5.06
11	FLT11-3PH	0.982	Leading	12.02	0.986	Leading	10.57	0.995	Leading	6.11
12	FLT12-3PH	0.998	Leading	3.63	0.997	Lagging	-4.54	0.997	Leading	5.03
13	FLT13-3PH	0.982	Leading	12.18	0.993	Leading	7.49	0.993	Leading	7.23
14	FLT14-3PH	0.981	Leading	12.50	0.993	Leading	7.39	0.993	Leading	7.22
15	FLT15-3PH	0.981	Leading	12.46	0.993	Leading	7.32	0.993	Leading	7.25
16	FLT16-3PH	0.980	Leading	12.60	0.993	Leading	7.37	0.993	Leading	7.29
17	FLT17-3PH	N/A	N/A	N/A	N/A	N/A	N/A	0.994	Leading	6.91
18	FLT18-3PH	0.986	Leading	10.62	0.986	Leading	10.66	1.000	Leading	0.49
19	FLT19-3PH	0.980	Leading	12.66	0.992	Leading	8.00	0.994	Leading	7.05
20	FLT20-3PH	0.992	Leading	8.00	0.998	Leading	4.06	0.999	Leading	3.20
21	FLT21-3PH	0.973	Leading	14.79	0.990	Leading	9.16	0.993	Leading	7.69
22	FLT22-3PH	0.987	Leading	10.22	0.998	Leading	4.01	0.996	Leading	5.52
23	FLT23-3PH	0.985	Leading	11.14	0.996	Leading	5.32	0.994	Leading	7.05
24	FLT24-3PH	0.980	Leading	12.73	0.993	Leading	7.56	0.993	Leading	7.41
25	FLT25-3PH	0.980	Leading	12.72	0.993	Leading	7.54	0.993	Leading	7.38
26	FLT26-3PH	0.980	Leading	12.72	0.993	Leading	7.57	0.993	Leading	7.39
27	FLT27-3PH	0.980	Leading	12.74	0.993	Leading	7.57	0.993	Leading	7.41
28	FLT28-3PH	0.980	Leading	12.74	0.993	Leading	7.57	0.993	Leading	7.40
29	FLT29-3PH	0.980	Leading	12.74	0.993	Leading	7.57	0.993	Leading	7.40
30	FLT30-3PH	0.980	Leading	12.75	0.993	Leading	7.58	0.993	Leading	7.42
31	FLT31-3PH	0.980	Leading	12.69	0.993	Leading	7.52	0.993	Leading	7.37
32	FLT32-3PH	0.980	Leading	12.74	0.993	Leading	7.57	0.993	Leading	7.40
33	FLT33-3PH	0.981	Leading	12.50	0.993	Leading	7.24	0.994	Leading	6.96
34	FLT34-3PH	0.979	Leading	13.19	0.992	Leading	7.87	0.992	Leading	7.84
35	FLT35-3PH	0.980	Leading	12.74	0.993	Leading	7.60	0.993	Leading	7.40
36	FLT36-3PH	0.980	Leading	12.72	0.993	Leading	7.51	0.993	Leading	7.39
37	FLT37-3PH	0.980	Leading	12.76	0.993	Leading	7.61	0.993	Leading	7.46
38	FLT38-3PH	0.981	Leading	12.58	0.993	Leading	7.45	0.993	Leading	7.34
39	FLT39-3PH	0.980	Leading	12.69	0.993	Leading	7.34	0.993	Leading	7.32
40	FLT40-3PH	0.956	Leading	19.16	0.971	Leading	15.44	0.975	Leading	14.30

Table 5-7 (Continued)
Power Factor Analysis: GEN-2015-028

Cont. No.	Case	2015 Summer Peak			2015 Winter Peak			2025 Summer Peak		
		Power Factor		Q (MVAR)	Power Factor		Q (MVAR)	Power Factor		Q (MVAR)
41	FLT41-3PH	0.999	Leading	3.26	1.000	Leading	1.15	0.999	Leading	2.86
42	FLT42-3PH	0.977	Leading	13.74	0.993	Leading	7.36	0.991	Leading	8.63
43	FLT43-3PH	0.991	Leading	8.51	0.998	Leading	4.40	1.000	Leading	1.76
44	FLT44-3PH	0.969	Leading	15.91	0.989	Leading	9.28	0.987	Leading	10.16
45	FLT45-3PH	0.979	Leading	13.01	0.995	Leading	6.54	0.993	Leading	7.66
46	FLT46-3PH	0.997	Leading	4.95	0.998	Lagging	-3.62	0.990	Lagging	-9.04
47	FLT47-3PH	0.981	Leading	12.45	0.993	Leading	7.23	0.994	Leading	6.87
48	FLT48-3PH	0.980	Leading	12.75	0.992	Leading	7.94	0.993	Leading	7.36
49	FLT49-3PH	0.980	Leading	12.74	0.993	Leading	7.57	0.993	Leading	7.40
50	FLT50-3PH	0.980	Leading	12.74	0.993	Leading	7.57	0.993	Leading	7.41
51	FLT51-3PH	0.980	Leading	12.70	0.993	Leading	7.49	0.993	Leading	7.38
52	FLT52-3PH	0.980	Leading	12.70	0.993	Leading	7.49	0.993	Leading	7.38
53	FLT53-3PH	0.980	Leading	12.67	0.993	Leading	7.52	0.993	Leading	7.33
54	FLT54-3PH	0.980	Leading	12.67	0.993	Leading	7.53	0.993	Leading	7.31
55	FLT55-3PH	0.980	Leading	12.72	0.993	Leading	7.55	0.993	Leading	7.38
56	FLT56-3PH	0.980	Leading	12.65	0.993	Leading	7.49	0.993	Leading	7.33
57	FLT57-3PH	0.980	Leading	12.67	0.993	Leading	7.49	0.993	Leading	7.37

Table 5-8
Power Factor Analysis: GEN-2015-030

Cont. No.	Case	2015 Summer Peak			2015 Winter Peak			2025 Summer Peak		
		Power Factor		Q (MVAR)	Power Factor		Q (MVAR)	Power Factor		Q (MVAR)
0	Base	0.985	Lagging	-34.73	0.973	Lagging	-47.82	0.981	Lagging	-39.76
1	FLT01-3PH	0.970	Lagging	-49.80	0.984	Lagging	-35.69	0.976	Lagging	-45.09
2	FLT02-3PH	0.938	Lagging	-74.26	0.950	Lagging	-65.90	0.945	Lagging	-69.56
3	FLT03-3PH	0.985	Lagging	-34.73	0.973	Lagging	-47.82	0.981	Lagging	-39.76
4	FLT04-3PH	0.988	Lagging	-31.62	0.980	Lagging	-41.13	0.982	Lagging	-38.93
5	FLT05-3PH	0.985	Lagging	-35.16	0.967	Lagging	-52.37	0.979	Lagging	-41.42
6	FLT06-3PH	0.984	Lagging	-36.12	0.968	Lagging	-51.75	0.979	Lagging	-42.02
7	FLT07-3PH	0.985	Lagging	-34.73	0.973	Lagging	-47.82	0.981	Lagging	-39.76
8	FLT08-3PH	0.998	Lagging	-12.62	0.979	Lagging	-41.33	1.000	Lagging	-2.83
9	FLT09-3PH	0.991	Lagging	-26.73	0.992	Lagging	-25.27	0.978	Lagging	-43.06
10	FLT10-3PH	0.996	Lagging	-18.86	0.995	Lagging	-20.36	0.990	Lagging	-28.82
11	FLT11-3PH	0.984	Lagging	-36.62	0.982	Lagging	-38.25	0.974	Lagging	-46.86
12	FLT12-3PH	0.902	Lagging	-95.69	0.857	Lagging	-120.39	0.964	Lagging	-55.29
13	FLT13-3PH	0.989	Lagging	-29.72	0.974	Lagging	-46.47	0.981	Lagging	-39.52
14	FLT14-3PH	0.982	Lagging	-38.01	0.969	Lagging	-51.10	0.979	Lagging	-41.68
15	FLT15-3PH	0.980	Lagging	-40.89	0.965	Lagging	-54.32	0.977	Lagging	-43.96
16	FLT16-3PH	0.985	Lagging	-35.14	0.972	Lagging	-48.46	0.980	Lagging	-40.14
17	FLT17-3PH	0.985	Lagging	-34.73	0.97	Lagging	-47.82	0.98	Lagging	-45.06
18	FLT18-3PH	0.979	Lagging	-41.79	0.966	Lagging	-53.77	0.977	Lagging	-43.82
19	FLT19-3PH	0.986	Lagging	-34.28	0.973	Lagging	-47.91	0.981	Lagging	-39.14
20	FLT20-3PH	0.981	Lagging	-39.29	0.969	Lagging	-51.08	0.978	Lagging	-42.41
21	FLT21-3PH	0.985	Lagging	-34.82	0.973	Lagging	-47.90	0.981	Lagging	-39.78
22	FLT22-3PH	0.983	Lagging	-37.03	0.971	Lagging	-49.69	0.979	Lagging	-41.47
23	FLT23-3PH	0.980	Lagging	-40.25	0.967	Lagging	-52.73	0.976	Lagging	-44.71
24	FLT24-3PH	0.984	Lagging	-35.96	0.971	Lagging	-48.85	0.980	Lagging	-41.13
25	FLT25-3PH	0.986	Lagging	-33.81	0.974	Lagging	-46.95	0.982	Lagging	-39.00
26	FLT26-3PH	0.985	Lagging	-34.90	0.973	Lagging	-47.61	0.981	Lagging	-39.85
27	FLT27-3PH	0.985	Lagging	-34.81	0.972	Lagging	-48.00	0.981	Lagging	-39.86
28	FLT28-3PH	0.985	Lagging	-34.73	0.973	Lagging	-47.82	0.981	Lagging	-39.76
29	FLT29-3PH	0.985	Lagging	-34.63	0.973	Lagging	-47.75	0.981	Lagging	-39.67
30	FLT30-3PH	0.985	Lagging	-34.67	0.973	Lagging	-47.84	0.981	Lagging	-39.66
31	FLT31-3PH	0.982	Lagging	-38.39	0.970	Lagging	-50.33	0.976	Lagging	-45.04
32	FLT32-3PH	0.985	Lagging	-34.45	0.973	Lagging	-47.48	0.981	Lagging	-39.54
33	FLT33-3PH	0.980	Lagging	-40.21	0.966	Lagging	-53.46	0.975	Lagging	-45.67
34	FLT34-3PH	0.988	Lagging	-31.65	0.975	Lagging	-45.59	0.984	Lagging	-36.38
35	FLT35-3PH	0.985	Lagging	-34.82	0.973	Lagging	-47.53	0.981	Lagging	-39.79
36	FLT36-3PH	0.985	Lagging	-35.07	0.972	Lagging	-48.21	0.981	Lagging	-40.00
37	FLT37-3PH	0.982	Lagging	-38.38	0.970	Lagging	-50.32	0.978	Lagging	-42.99
38	FLT38-3PH	0.983	Lagging	-36.98	0.971	Lagging	-49.54	0.979	Lagging	-41.64
39	FLT39-3PH	0.984	Lagging	-35.70	0.973	Lagging	-47.21	0.980	Lagging	-40.39
40	FLT40-3PH	0.985	Lagging	-35.06	0.972	Lagging	-48.25	0.980	Lagging	-40.16

Table 5-8 (Continued)
Power Factor Analysis: GEN-2015-030

Cont. No.	Case	2015 Summer Peak			2015 Winter Peak			2025 Summer Peak		
		Power Factor		Q (MVAR)	Power Factor		Q (MVAR)	Power Factor		Q (MVAR)
41	FLT41-3PH	0.984	Lagging	-35.98	0.972	Lagging	-48.05	0.980	Lagging	-40.64
42	FLT42-3PH	0.984	Lagging	-35.75	0.972	Lagging	-48.64	0.980	Lagging	-40.64
43	FLT43-3PH	0.985	Lagging	-35.27	0.972	Lagging	-48.15	0.981	Lagging	-40.04
44	FLT44-3PH	0.985	Lagging	-34.76	0.972	Lagging	-47.98	0.981	Lagging	-39.76
45	FLT45-3PH	0.985	Lagging	-34.93	0.972	Lagging	-48.11	0.981	Lagging	-39.87
46	FLT46-3PH	0.985	Lagging	-34.81	0.973	Lagging	-47.71	0.981	Lagging	-39.56
47	FLT47-3PH	0.947	Lagging	-67.86	0.917	Lagging	-86.83	0.946	Lagging	-68.89
48	FLT48-3PH	0.983	Lagging	-37.07	0.968	Lagging	-52.19	0.981	Lagging	-39.54
49	FLT49-3PH	0.985	Lagging	-34.73	0.973	Lagging	-47.82	0.981	Lagging	-39.76
50	FLT50-3PH	0.985	Lagging	-34.70	0.973	Lagging	-47.80	0.981	Lagging	-39.71
51	FLT51-3PH	0.985	Lagging	-34.97	0.972	Lagging	-48.25	0.981	Lagging	-39.92
52	FLT52-3PH	0.985	Lagging	-34.97	0.972	Lagging	-48.25	0.981	Lagging	-39.92
53	FLT53-3PH	0.986	Lagging	-34.10	0.973	Lagging	-47.30	0.981	Lagging	-39.20
54	FLT54-3PH	0.986	Lagging	-34.22	0.973	Lagging	-47.46	0.981	Lagging	-39.25
55	FLT55-3PH	0.985	Lagging	-34.67	0.973	Lagging	-47.82	0.981	Lagging	-39.72
56	FLT56-3PH	0.989	Lagging	-30.25	0.976	Lagging	-44.24	0.984	Lagging	-36.48
57	FLT57-3PH	0.987	Lagging	-32.09	0.975	Lagging	-45.89	0.982	Lagging	-38.59

Study Generator GEN-2015-001

The Power Factor Analysis shows that GEN-2015-001 has a power factor range of 0.957 to 0.999 leading (absorbing) for the 2015 Summer Peak conditions, a power factor range of 0.980 leading (absorbing) to 1.00 (unity) for the 2015 Winter Peak conditions, and a power factor range of 0.986 to 0.999 leading (absorbing) for the 2025 Summer Peak conditions.

Study Generator GEN-2015-003

The Power Factor Analysis shows that GEN-2015-003 has a power factor range of 0.979 lagging (supplying) to 0.986 leading (absorbing) for the 2015 Summer Peak conditions, a power factor range of 0.898 lagging (supplying) to 0.994 leading (absorbing) for the 2015 Winter Peak conditions, and a power factor range of 0.983 leading (supplying) to 1.00 (unity) for the 2025 Summer Peak conditions.

Study Generator GEN-2015-015

The Power Factor Analysis shows that GEN-2015-015 has a power factor range of 0.946 lagging (supplying) to 0.991 leading (absorbing) for the 2015 Summer Peak conditions, a power factor range of 0.959 lagging (supplying) to 0.991 leading (absorbing) for the 2015 Winter Peak conditions, and a power factor range of 0.991 lagging (supplying) to 0.996 leading (absorbing) for the 2025 Summer Peak conditions.

Study Generator GEN-2015-016

The Power Factor Analysis shows that GEN-2015-016 has a power factor range of 0.971 to 0.997 leading (absorbing) for the 2015 Summer Peak conditions, a power factor range of 0.968 to 0.996 leading (absorbing) for the 2015 Winter Peak conditions, and a power factor range of 0.975 to 0.997 leading (absorbing) for the 2025 Summer Peak conditions.

Study Generators GEN-2015-024 and GEN-2015-025 (Tap Wichita – Thistle circuit 1&2)

The Power Factor Analysis shows that the Wichita generation has a power factor range of 0.897 lagging (supplying) to 1.00 (unity) for the 2015 Summer Peak conditions, a power factor range of 0.655 to 0.883 lagging (supplying) for the 2015 Winter Peak conditions, and a power factor range of 0.911 lagging (supplying) to 0.999 leading (absorbing) for the 2025 Summer Peak conditions.

Study Generator GEN-2015-028

The Power Factor Analysis shows that GEN-2015-028 has a power factor range of 0.947 to 0.999 leading (supplying) for the 2015 Summer Peak conditions, a power factor range of 0.997 lagging (supplying) to 0.971 leading (absorbing) for the 2015 Winter Peak conditions, and a power factor range of 0.990 lagging (supplying) to 0.975 leading (absorbing) for the 2025 Summer Peak conditions.

Study Generator GEN-2015-030

The Power Factor Analysis shows that GEN-2015-030 has a power factor range of 0.902 to 0.998 lagging (supplying) for the 2015 Summer Peak conditions, a power factor range of 0.857 to 0.995 lagging (supplying) for the 2015 Winter Peak conditions, and a power factor range of 0.945 lagging (supplying) to 1.00 (unity) for the 2025 Summer Peak conditions.

SECTION 6: LOW WIND/NO WIND ANALYSIS

The objective of this task is to determine the impact of low wind or no wind conditions on wind farms that interconnect to a 345 kV or 230 kV bus. The 2015 Summer Peak, 2015 Winter Peak, and 2025 Summer Peak power flows provided by SPP were examined for this analysis.

6.1 Approach

Low wind or no wind conditions were examined for all 345 kV or 230 kV wind farms. Generators were disabled (independently), but the collector systems remained in-service. In order to maintain generation and load balance in the SPP area, the generation was scaled after disabling the respective generator. The amount of reactive power injected into the transmission network was recorded at the respective point of interconnection. This reactive power comes from

the capacitance of the project's transmission lines and collector cables. A shunt reactor was added at the high side bus to bring the Mvar flow into the POI down to approximately zero.

6.2 Low Wind/No Wind Analysis Results

The reactance needed to bring the Mvar flow into the point of interconnect to zero Mvar was recorded for each season for all 345 kV or 230 kV wind farms. Refer to Table 6-1 for the Low Wind/No Wind Analysis results. The table lists the generators examined and the amount of reactive power needed for zero Mvar flow into the POI for each season.

Table 6-1
Low Wind/No Wind Analysis

Request	Size (MW)	Point of Interconnection	15SP	15WP	25SP
GEN-2015-001	200	Ranch Road 345kV	10.0	10.0	10.0
GEN-2015-003	200	Renfrow 345kV	15.2	15.2	15.2
GEN-2015-024	220	Tap Wichita - Thistle 345kV cicruit 1&2	57.1	57.1	57.1
GEN-2015-025	220				
GEN-2015-030	200	Sooner 345kV	9.8	9.8	9.8

SECTION 7: CONCLUSIONS

SUMMARY OF STABILITY ANALYSIS

The Stability Analysis determined that there were no contingencies that resulted in system instability, generation tripping offline, or voltage violations for the 2015 Summer Peak, 2015 Winter Peak, and 2025 Summer Peak conditions when all generation interconnection requests were at 100% output for both the Cluster Scenario study and the Stand Alone Scenario study. Thus, no mitigations or upgrades were required.

Note contingencies, FLT01-3PH and FLT03-3PH, required the "LVRT extreme UV limit" value in the "VWVRP7" dynamic model of GEN-2015-001 to be changed from 0.05 p.u. to 0.0 p.u. in order for GEN-2015-001 to remain online, as discussed with SPP. The dynamic file modification was used to complete the analysis.

Several voltage buses consistently fell outside of the 0.95 p.u. to 1.05 p.u. range. All instances were observed for pre-fault conditions and since all voltages returned to pre-fault conditions, no mitigation was required.

SUMMARY OF THE SHORT CIRCUIT ANALYSIS

The short circuit analysis was performed on the 2025 Summer Peak power flow for all study projects. Refer to Table 7-1 for a list of maximum fault currents observed for each study project.

Table 7-1
List of Maximum Fault Currents Observed for Each Study Project

Study Project	POI Name	Fault Current at POI (kA)	Maximum Fault Current (kA)	Fault Location	Bus Voltage (kV)
GEN-2015-001	Ranch Road 345 kV	12.91	41.57	NORTWST4	138
GEN-2015-003	Renfrow 345 kV	12.87	41.57	NORTWST4	138
GEN-2015-015	Tap Medford - Coyote 138 kV	8.51	24.56	WICHITA7	345
GEN-2015-016	Tap Centerville - Marmaton 161 kV	7.26	24.67	LACYGNE7	345
GEN-2015-024	Tap Witchita - Thistle 345 kV circuit 1	24.56	41.45	EVANS S4	138
GEN-2015-025	Tap Witchita - Thistle 345 kV circuit 2				
GEN-2015-028	Nardins 69 kV	5.52	15.67	WHEAGLE4	138
GEN-2015-030	Sooner 345 kV	22.77	57.59	SEMINOL4	138
ASGI-2015-004	Coffeyville Municipal Light & Power Northern Industrial Park Substation 69 kV	8.59	26.11	ONETA--7	345

SUMMARY OF POWER FACTOR ANALYSIS

Study Generator GEN-2015-001

The Power Factor Analysis shows that GEN-2015-001 has a power factor range of 0.957 to 0.999 leading (absorbing) for the 2015 Summer Peak conditions, a power factor range of 0.980 leading (absorbing) to 1.00 (unity) for the 2015 Winter Peak conditions, and a power factor range of 0.986 to 0.999 leading (absorbing) for the 2025 Summer Peak conditions.

Study Generator GEN-2015-003

The Power Factor Analysis shows that GEN-2015-003 has a power factor range of 0.979 lagging (supplying) to 0.986 leading (absorbing) for the 2015 Summer Peak conditions, a power factor range of 0.898 lagging (supplying) to 0.994 leading (absorbing) for the 2015 Winter Peak conditions, and a power factor range of 0.983 leading (supplying) to 1.00 (unity) for the 2025 Summer Peak conditions.

Study Generator GEN-2015-015

The Power Factor Analysis shows that GEN-2015-015 has a power factor range of 0.946 lagging (supplying) to 0.991 leading (absorbing) for the 2015 Summer Peak conditions, a power factor range of 0.959 lagging (supplying) to 0.991 leading (absorbing) for the 2015 Winter Peak conditions, and a power factor range of 0.991 lagging (supplying) to 0.996 leading (absorbing) for the 2025 Summer Peak conditions.

Study Generator GEN-2015-016

The Power Factor Analysis shows that GEN-2015-016 has a power factor range of 0.971 to 0.997 leading (absorbing) for the 2015 Summer Peak conditions, a power factor range of 0.968 to 0.996 leading (absorbing) for the 2015 Winter Peak conditions, and a power factor range of 0.975 to 0.997 leading (absorbing) for the 2025 Summer Peak conditions.

Study Generators GEN-2015-024 and GEN-2015-025 (Tap Wichita – Thistle circuit 1&2)

The Power Factor Analysis shows that the Wichita generation has a power factor range of 0.897 lagging (supplying) to 1.00 (unity) for the 2015 Summer Peak conditions, a power factor range of 0.655 to 0.883 lagging (supplying) for the 2015 Winter Peak conditions, and a power factor range of 0.911 lagging (supplying) to 0.999 leading (absorbing) for the 2025 Summer Peak conditions.

Study Generator GEN-2015-028

The Power Factor Analysis shows that GEN-2015-028 has a power factor range of 0.947 to 0.999 leading (supplying) for the 2015 Summer Peak conditions, a power factor range of 0.997 lagging (supplying) to 0.971 leading (absorbing) for the 2015 Winter Peak conditions, and a power factor range of 0.990 lagging (supplying) to 0.975 leading (absorbing) for the 2025 Summer Peak conditions.

Study Generator GEN-2015-030

The Power Factor Analysis shows that GEN-2015-030 has a power factor range of 0.902 to 0.998 lagging (supplying) for the 2015 Summer Peak conditions, a power factor range of 0.857 to 0.995 lagging (supplying) for the 2015 Winter Peak conditions, and a power factor range of 0/945 lagging (supplying) to 1.00 (unity) for the 2025 Summer Peak conditions.

SUMMARY OF LOW WIND/NO WIND ANALYSIS

The amount of reactive power injected into the transmission network was recorded at the point of interconnection for GEN-2015-001, GEN-2015-003, GEN-2015-024, GEN-2015-025, and GEN-2015-030 for each season. The maximum reactance needed for zero Mvar flow was 57.1 Mvar for GEN-2015-024 and GEN-2015-025 (Tap Wichita – Thistle circuit 1&2). The minimum reactance needed for zero Mvar flow was 9.8 Mvar for GEN-2015-030 (Sooner 345 kV).

R: Group 9 Dynamic Stability Analysis Report

See S&C study report and SPP addendum on next page

S&C ELECTRIC COMPANY
Excellence Through Innovation

DISIS-2015-001 (GROUP 9)

LITTLE ROCK, AR

SOUTHWEST POWER POOL

DEFINITIVE INTERCONNECTION SYSTEM IMPACT STUDY

S&C PROJECT NUMBER: 9406

DOCUMENT NUMBER: E-857

REVISION: 1

FINAL REPORT

CONFIDENTIAL

JULY 28, 2015

DISCLAIMER

THIS DOCUMENT WAS PREPARED AND PROVIDED PURSUANT TO A CONTRACT WITH CUSTOMER AND/OR END USER THAT DEFINES THE PARTIES RESPECTIVE RIGHTS TO WORK PRODUCT AND INTELLECTUAL PROPERTY. ANY OTHER USE OF THIS DOCUMENT IS STRICTLY PROHIBITED. ALL OTHER RIGHTS ARE RESERVED AND NO LICENSE OR RIGHTS TO THE SUBJECT MATTER OF THIS DOCUMENT ARE GRANTED BY POSSESSION THEREOF.

REPORT REVISION HISTORY:

REV	DATE	PREPARED BY	REVIEWED BY	APPROVED BY	DESCRIPTION
A	07/16/2015	JT	SK	EHC	Preliminary report issued
0	07/24/2015	JT	SK	EHC	Final report issued
1	07/28/2015	JT	SK	EHC	SPP's comments on high voltages condition added

AUTHORS:

Prepared By:

Jie Tang
Project Engineer
S&C Electric Company

Reviewed By:

Saeed Kamalinia
Senior Engineer
S&C Electric Company

Approved By:

Ernst Camm
Manager – Consulting and Analytical Services
S&C Electric Company

TABLE OF CONTENTS

1. Executive Summary 5
2. Introduction 7
3. Transmission System and Study Area 9
4. Power Flow Base Cases 10
5. Power Flow Model 12
6. Dynamic Stability Analysis 14
   6.1. Assumptions 14
   6.2. Stability Criteria 14
   6.3. Dynamic Stability Results 14
7. Power Factor Analysis 21
8. No Wind Conditions Analysis 23
9. Short-Circuit Study 24
10. Conclusions and Recommendations 25

LIST OF FIGURES

Figure 1. One-line Diagrams of the Interconnection Request Projects 13
Figure 2. Unstable Machines #584653, #584656, #652353, and #652356 in Contingency #13, 2015 SP Cluster 16
Figure 3. Stable Machines #584653, #584656, #652353, and #652356 in Contingency #13, 2015 SP Cluster after the upgrade 20

LIST OF TABLES

Table 1: Group 9 Generation Interconnection Requests 7
Table 2: Prior Queued Projects 7
Table 3: WAPA Generators 8
Table 4: Group 9 Cluster Dynamic Stability Results 17
Table 5: Base Case Voltages at the Interconnection Request POI Bus 21
Table 6: Summary of Power Factor Analysis at the POI 22
Table 7: Shunt Reactor Mvar Determined by No Wind Study 23

LIST OF APPENDICES

Appendix A
SPP Group 9 Fault Definitions (Submitted in a Separate File)
Appendix B
Southwest Power Pool Disturbance Performance Requirements (Submitted in a Separate File)
Appendix C
Dynamic Stability Plots For Cluster Scenario (Submitted in Separate Files from Appendix C-1 to C-3)
Appendix D
Dynamic Stability Plots For Stand-Alone Scenario (Submitted in Separate File from Appendix D-1 to D-18)
Appendix E
Power Factor Analysis Results (Submitted in Separate File from Appendix E-1 to E-6)
Appendix F
Short-Circuit Study Results (Submitted in a Separate File)

1. Executive Summary

S&C Electric Company (S&C) has performed a Definitive Interconnection System Impact Study, DISIS-2015-001 (Group 9), in response to a request through Southwest Power Pool (SPP) Tariff. Group 9 consists of six (6) new interconnection (POI) requests (GEN-2014-023, GEN-2014-059, GEN-2014-060, GEN-2015-007, GEN-2015-008, and GEN-2015-023), all of which are wind farm projects.

S&C has performed dynamic stability analysis for Group 9 under Cluster and Stand-Alone (SA) scenarios. The cluster studies were performed using three (3) cluster base cases (2015 Summer Peak, 2015 Winter Peak, and 2025 Summer Peak) provided by SPP. In the cluster studies, all six new interconnection requests were studied at 100% of nameplate MW capacity. The stand-alone studies were performed using three (3) stand-alone base cases (2015 SP, 2015 WP, and 2025 SP) provided by SPP and by placing an interconnection request into service, one at a time. The in-service interconnection project was dispatched at 100% power and the (5) out of service interconnection projects were set to zero generation or to a defined value if the project is an upgrade to an existing project or facility. The results of dynamics stability analysis for the cluster and stand-alone scenarios indicated that Group 9 required a network upgrade from Holt County to Cherry County to Gentleman 345 kV in 2015 SP and 2015 WP cases for certain contingencies, in order for study projects and nearby generators to ride through and remain stable for all contingencies. Without this necessary upgrade, 2015 SP and 2015 WP cluster base cases and GEN-2015-023 stand-alone base cases exhibit instability for certain contingencies. This issue was discussed with SPP and after the proposed Holt County to Cherry County to Gentleman 345 kV upgrade was added to the base case, the instability issues were eliminated. The dynamics stability studies revealed that Group 9 projects met the SPP transient voltage requirement, though 115 kV Petersbug bus (prior-queued interconnection #640444) in some contingencies reached marginally over the 1.20 p.u. threshold. Such minor voltage excursions were considered acceptable. It was identified that the system intact condition high voltages can be lowered using means such as switching off nearby capacitor banks and adjustment of transformer taps. Lower the system intact voltage conditions will alleviate these voltage recovery violations.

S&C has performed power factor analysis on Group 9 Cluster scenarios. Power factor analysis reported the power factors at the study project POI buses for all N-1 (or N-1-1 for prior-outage

contingencies) three-phase contingences and marked the contingency at which the required power factor at the study POI project is beyond the normal required capability (from 0.95 lagging to 0.95 leading) of the studied wind farm. In addition, the maximum leading and lagging reactive power demand and power factor found by the power factor analysis study at the POI buses were given in Section 7.

S&C has performed an analysis of no-wind conditions for the interconnection requests being connected to the 345-kV or 230-kV buses. The no-wind analysis was performed under the Cluster scenarios by taking the interconnection wind generator out of service and determining the Mvar size of a shunt reactor to offset the reactive power that is due to the capacitance of the project's transmission lines and collector cables. The required shunt reactor Mvar ratings are given in Section 8.

S&C has performed a short-circuit analysis for the 2025 Summer Peak under Group 9 Cluster and reported short circuit results at all buses up to five levels away from the study project POIs.

2. INTRODUCTION

S&C has performed a Definitive Interconnection System Impact Study, DISIS-2015-001 (Group 9), in response to a request through the SPP Tariff. Group 9 consist of six (6) new interconnection requests listed in

Table 1, thirty (30) prior-queued projects listed in Table 2, and several adjacent generating units in the WAPA system listed in

Table 3 at 100% of power output.

Table 1: Group 9 Generation Interconnection Requests

Project	Size (MW)	Generator Model	Generator Bus(es)	Point of Interconnection (POI)	POI Bus
GEN-2014-023	79.9	GE	583923	Tap Ft Randall to Meadow Grove 230 kV	560718
GEN-2014-059	160.0	Vestas	584233	Tap Sidney-Ogallala 230 kV	560014
GEN-2014-060	125.8	GE	584113	Tap Pauline-Hildreth 115 kV	560733
GEN-2015-007	160.0	GE	584513	Hoskins 345 kV	640226
GEN-2015-008	150.4	GE	584523	Antelope 115 kV	640521
GEN-2015-023	300.8	GE	584653 and 584656	Holt County 345 kV	640510

Table 2: Prior Queued Projects

Request	Size (MW)	Generator Model	Point of Interconnection
GEN-2003-021N	75	Vestas 1.65 MW (640026)	Tap on the Ainsworth – Calamus 115 kV line (640050)
GEN-2004-023N	75	GENROU (640028)	Columbus 115 kV (640119)
GEN-2006-020N	42	Vestas V90 VCUS 1.8 & 3.0 MW (640421,640441)	Bloomfield 115 kV (640084)
GEN-2006-37N1	75	GE 1.7 MW (640449)	Broken Bow 115 kV (640089)
GEN-2006-038N005	79.5	GE 1.6 MW (640428)	Broken Bow 115 kV (640089)
GEN-2006-038N019	79.5	GE 1.5 MW (640431)	Petersburg 115 kV (640444)
GEN-2006-044N	40.5	GE 1.5 MW (645062)	Petersburg 115 kV (640444)
GEN-2007-011N08	81	Vestas V90 VCRS 3.0 MW (640418)	Bloomfield 115 kV (640084)
GEN-2008-086N02 (replaced by GEN-2014-032)	211.22	GE 100m 1.7 MW (645063, 645063)	Meadow Grove 230 kV (GEN-2008-086N02 POI) (640540)
GEN-2008-119O	60	GE 1.5 MW (645061)	S1399 161kV (646399)
GEN-2008-123N	89.7	GE 100m 1.79 MW, GE 103m 1.72 MW (572054)	Tap on the Pauline – Guide Rock 115 kV (560137)
GEN-2009-040	73.8	Vestas V100 VCSS 2.0 MW (532904)	Marshall 115 kV (533303)

GEN-2010-041	10.5	GE 1.5 MW (580071)	S1399 161kV (646399)
GEN-2010-051	200	GE 100m 1.7 MW (580014, 580017, 580020)	Tap on the Twin Church – Hoskins 230 kV line (560347)
GEN-2011-018 (replaced by GEN-2013-008)	73.6	GE 100m 1.7 MW (640555)	Steele County 115 kV (640426)
GEN-2011-027	120	GE 1.85 MW (580022, 580021, 580023)	Tap Twin Church-Hoskins 230 kV (560347)
GEN-2011-056	3.6 MW increase (Pgen=21.6MW)	GENSAL (640013)	Jeffrey 115 kV (640238)
GEN-2011-056A	3.6 MW increase (Pgen=21.6MW)	GENSAL (640014)	Johnson 1 115 kV (640240)
GEN-2011-056B	4.5 MW increase (Pgen=23.5MW)	GENSAL (640015)	Johnson 2 115 kV (640242)
GEN-2012-021	4.8 MW	GENROU (650010)	84th & Bluff 115 kV (650275)
GEN-2013-002	50.6	Siemens 108m 2.3 MW (583703)	Tap Sheldon - SW7&Bennet - Folsom/Pleasant Hill 115 kV (560746)
GEN-2013-008	1.2MW increase to GEN-2011-018 (Pgen=74.8MW)	GE 100m 1.7 MW (640555)	Steele City (640426) 115 kV
GEN-2013-014	25.5	GE 100m 1.7 MW (583643)	Tap Pauline (640313) – Guide Rock (640206) 115 kV (560137)
GEN-2013-019	73.6	Siemens 108m 2.3 MW (583703)	Tap Sheldon - SW7&Bennet - Folsom/Pleasant Hill 115 kV (560746)
GEN-2013-032	204.0	GE 97.4m 1.7 MW (583783)	Neligh 115 kV (640293)
GEN-2014-004	3.96	GE 97.4m 1.79 MW (640555)	Steele City 115 kV (GEN-2011-018 POI) (640426)
GEN-2014-013	73.5	GE XLE 97.4m (583833)	Meadow Grove 230 kV (GEN-2008-086N02 POI) (640540)
GEN-2014-031	35.8	GE 1.79 MW (583836)	Meadow Grove 230 kV (GEN-2008-086N02 POI) (640540)
GEN-2014-039	73.39	GE 1.79 MW (584093)	Friend 115 kV (640174)
Grand Prairie Wind	400.0	Vestas V110 VCSS 2.0MW (652353/652356)	Holt County – Ft. Thompson 345kV (POI bus #652532)

Table 3: WAPA Generators

Bus #	Bus Name	Pmax (MW)	KV	Unit ID
652546	FTRDL12G	43.0	13.800	1
652546	FTRDL12G	43.0	13.800	2
652547	FTRDL34G	43.0	13.800	3
652547	FTRDL34G	43.0	13.800	4
652548	FTRDL56G	43.0	13.800	5
652548	FTRDL56G	44.0	13.800	6
652549	FTRDL78G	44.0	13.800	7
652549	FTRDL78G	44.0	13.800	8
652575	GAVINS1G	31.0	13.800	1
652576	GAVINS2G	31.0	13.800	2
652577	GAVINS3G	30.0	13.800	3
659116	SPIRI71G	52.0	13.800	1
659117	SPIRI72G	52.0	13.800	2

3. Transmission System and Study Area

The interconnection requests in Group 9 will interconnect into Western Area Power Administration (WAPA, Area #652) and Nebraska Public Power District (NPPD, Area #640).

In addition to Areas #640 and #652, the following areas were monitored also:

- Sunflower Electric Power Corporation (SUNC, Area #534)
- Westar Energy, Inc. (WERE, Area #536)
- Greater Missouri Operations Company (GMO, Area #540)
- Kansas City Power & Light Company (KCP&L, Area #541)
- Omaha Public Power District (OPPD, Area #645)
- Lincoln Electric System (LES, Area #650)
- MidAmerican Energy (MEC, Area #635)

4. Power Flow Base Cases

DISIS-2015-001 (Group 9) and prior-queued projects were modeled as aggregated generating units in the base cases from SPP.

Cluster Scenario Base Cases:

- **MDWG14-15SP_DIS1501_G09.SAV** – 2015 Summer Peak Cluster Base Case for Group 9. New interconnection requests and prior queued projects at 100% output power.
- **MDWG14-15WP_DIS1501_G09.SAV** – 2015 Winter Peak Cluster Base Case for Group 9. New interconnection requests and prior queued projects at 100% output power.
- **MDWG14-25SP_DIS1501_G09.SAV** – 2025 Summer Peak Cluster Base Case for Group 9. New interconnection requests and prior queued projects at 100% output power.

Stand-Alone Scenario Base Cases:

- **MDWG14-15SP_DIS1501_G09-SA.SAV** – 2015 Summer Peak SA Base Case for Group 9. New interconnection requests currently out of service.
- **MDWG14-15WP_DIS1501_G09-SA.SAV** – 2015 Winter Peak SA Base Case for Group 9. New interconnection requests currently out of service.
- **MDWG14-25SP_DIS1501_G09-SA.SAV** – 2025 Summer Peak SA Base Case for Group 9. New interconnection requests currently out of service.

On June 18, 2015, S&C received two additional IDEV files and instructions from SPP, to correct the network parameters in the original base cases, cluster and stand-alone. They are

(1) Run "GrandIsland_Holt_GrandPrairie_FtThomp_Line_reactor_corrections.idv" on all three season base cases. This idev makes correction to the line reactors on the Grand Island to Holt to Grand Prairie to Ft. Thompson 345 kV line.

(2) Run "13.DIS-15-1_BUILD_RPLAN-PROJECT[15G 15SP 15WP].idv" on the 2025 Summer Peak case. The idev adds a 345/115 kV transformer (which is missing in this case) at Cherry County 345kV (640500) to Thedford 115kV (640381). The 2015SP and

2015WP cases will not have this transformer and the 345kV line from Holt County (640510) to Cherry County (640500) to Gentleman (640183) since these will not go into service until sometime in 2017.

5. Power Flow Model

SPP's base case power flow models were built in PSS/E 32.2.2. In PSS/E of the same version, S&C created one-line diagrams depicted in Figure 1 for each interconnection request.

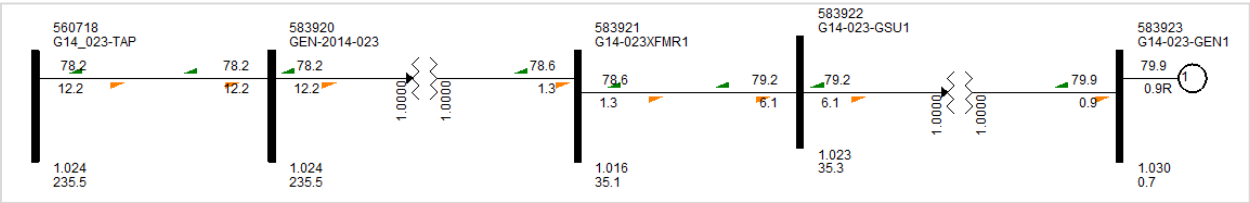

(a) Interconnection request GEN-2014-023

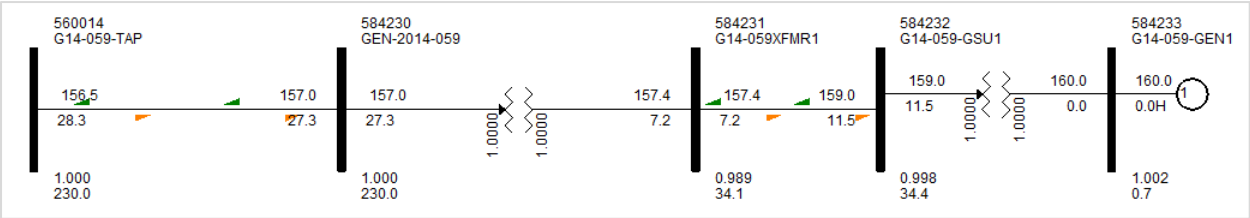

(b) Interconnection request GEN-2014-059

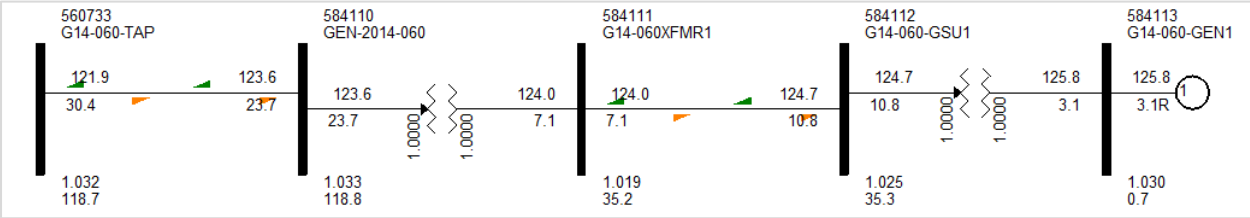

(c) Interconnection request GEN-2014-060

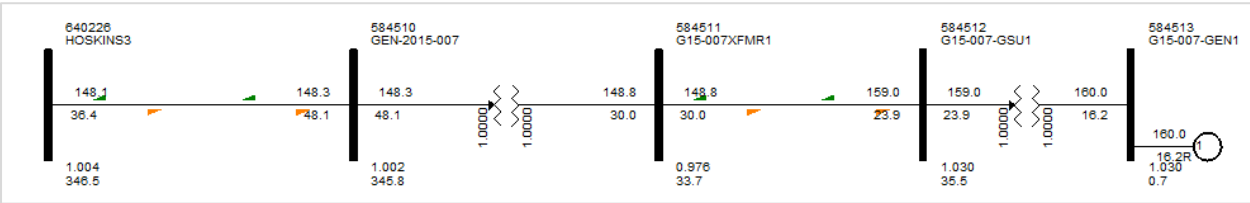

(d) Interconnection request GEN-2015-007

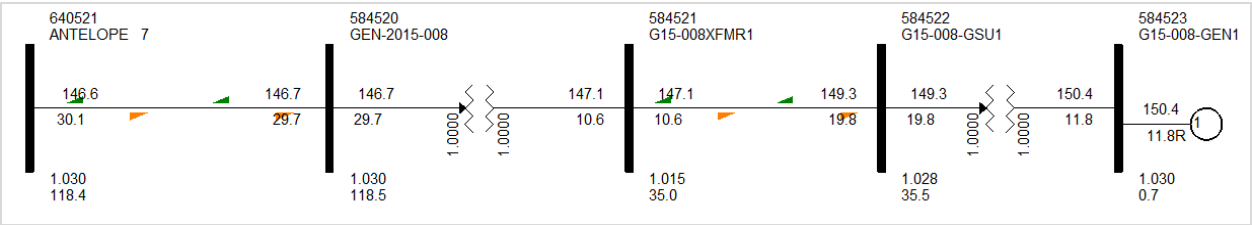

(e) Interconnection request GEN-2015-008

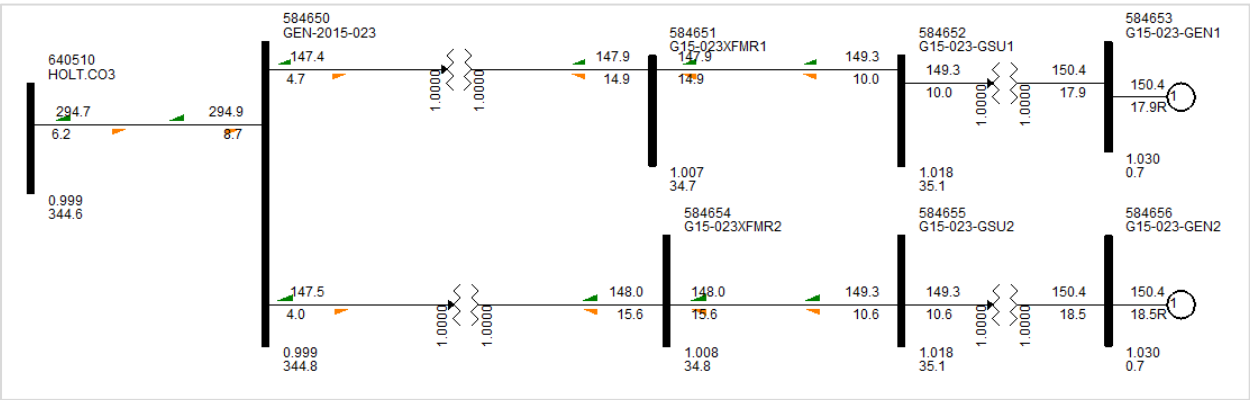

(f) Interconnection request GEN-2015-023

Figure 1. One-line Diagrams of the Interconnection Request Projects

6. Dynamic Stability Analysis

6.1. Assumptions

Dynamic stability analysis was performed for all the SPP contingencies listed in Appendix A. Three phase faults were simulated as bolted faults, while single line-to-ground faults were simulated under the assumption that a single line-to-ground fault will cause a 60% drop in the positive-sequence voltage at the fault location.

6.2. Stability Criteria

Dynamic stability studies were performed to ensure system stability following critical faults on the system. The system is considered stable if the following conditions are met:

(1) Disturbances including three-phase and single-phase to ground faults, should not cause synchronous and asynchronous plants disconnected from the transmission grid.

(2) The angular positions of synchronous machine rotor become constant following an aperiodic system disturbance.

(3) Voltage magnitudes and frequencies at terminals of asynchronous generators should not exceed magnitudes and durations that will cause protection elements to operate. Furthermore, the response after the disturbance needs to be studied at the terminals of the machine to ensure that there are no sustained oscillations in power output, speed, frequency, etc.

(4) Voltage magnitudes and angles after the disturbance should settle to a constant and acceptable operating level. Frequencies should settle to the acceptable range within nominal 60 Hz power frequency.

In addition, performance of the transmission system is measured against the Southwest Power Pool Disturbance Criteria Requirements on Angular oscillations and Transient Voltage Recovery, detailed in Appendix B.

6.3. Dynamic Stability Results

The results of dynamic stability analyses indicated that:

- Machines at bus #584653, #584656, #652353, and #652356 exhibited the stability issues in Contingency #13, #14 and #97 of 2015 SP Cluster. The same stability issues also occurred in Contingency #13, #14 and #97 of 2015 WP Cluster, Contingency #13, #14 and #97 of 2015 SP and 2015 WP stand-alone project GEN-2015-023. Figure 2 show the instability results for Contingency #13 of 2015 SP Cluster.
- In certain contingencies, the maximum transient voltage at the 115 kV Petersbug bus (prior-queued interconnection #640444) was higher than 1.20 p.u. voltage, the upper range by SPP for the transient voltage recovery requirement. For example, 115 kV Petersbug bus voltages reached 1.21 p.u. in Contingency #87 of 2025 SP cluster, 1.21 p.u. in Contingency #88 of 2025 SP cluster, 1.21 p.u. in Contingency #87 and 1.2037 p.u. in Contingency #88 of 2025 SP stand-alone project GEN-2015-008.
- Machines other than discussed above remained stable for all contingencies.
- Bus voltages other than discussed above were all met the SPP transient voltage recovery requirement.

Table 4 below summarized the cluster dynamic stability results for each contingency and each season.

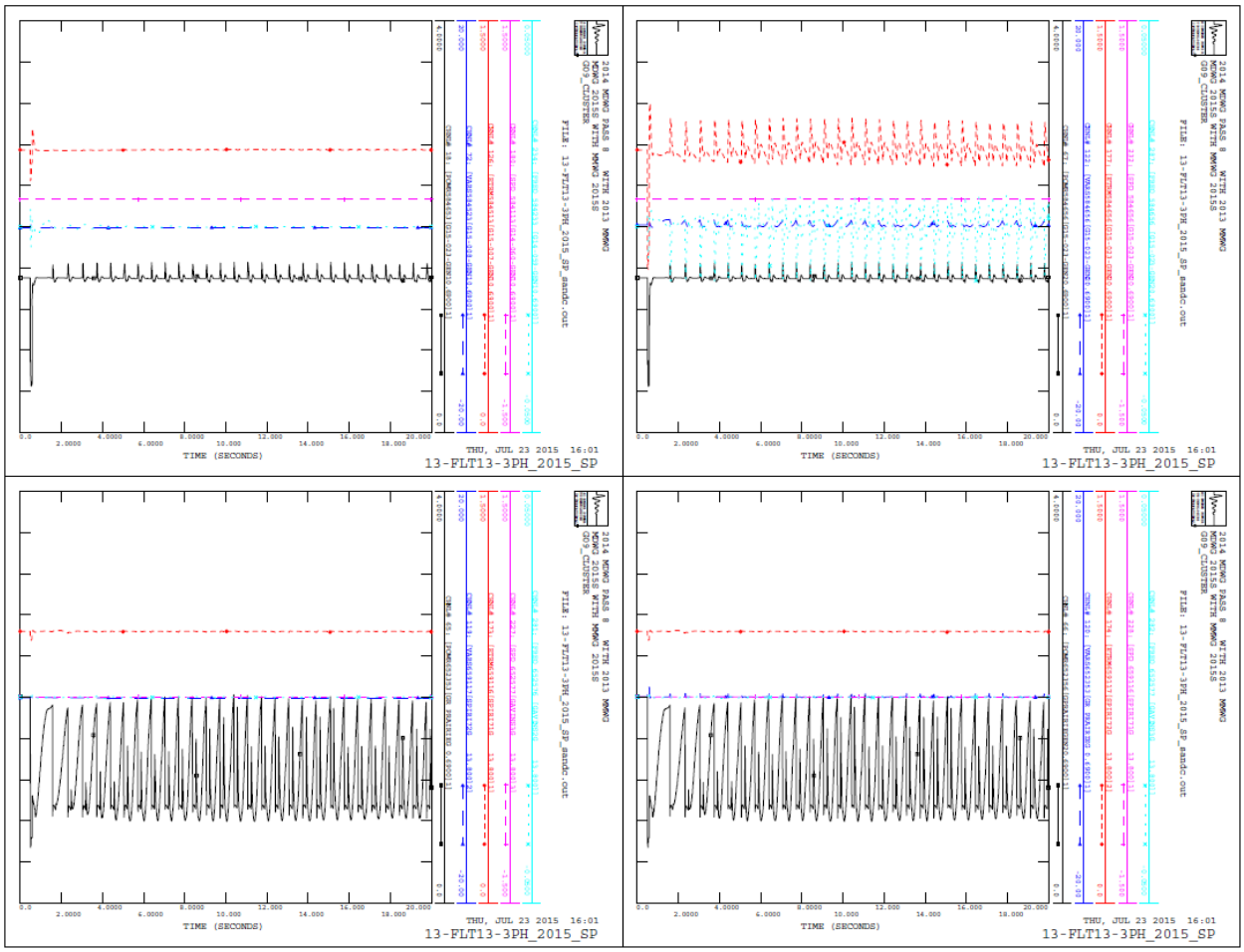

Figure 2. Unstable Machines #584653, #584656, #652353, and #652356 in Contingency #13, 2015 SP Cluster
(Power-Black, Var-Blue, Eterm-Red, SPD-Pink and Freq-Cyan)

Table 4: Group 9 Cluster Dynamic Stability Results

Cont. No.	Cont. Name	2015 Summer Peak	2015 Winter Peak	2025 Summer Peak
1	FLT01-3PH	STABLE	STABLE	STABLE
2	FLT02-3PH	STABLE	STABLE	STABLE
3	FLT03-3PH	STABLE	STABLE	STABLE
4	FLT04-3PH	STABLE	STABLE	STABLE
5	FLT05-3PH	STABLE	STABLE	STABLE
6	FLT06-3PH	STABLE	STABLE	STABLE
7	FLT07-3PH	STABLE	STABLE	STABLE
8	FLT08-3PH	STABLE	STABLE	STABLE
9	FLT08-3PH	STABLE	STABLE	STABLE
10	FLT10-3PH	STABLE	STABLE	STABLE
11	FLT11-3PH 2025SP Only	N/A	N/A	STABLE
12	FLT12-3PH	STABLE	STABLE	STABLE
13	FLT13-3PH	UNSTABLE	UNSTABLE	STABLE
14	FLT14-3PH	UNSTABLE	UNSTABLE	STABLE
15	FLT15-3PH	STABLE	STABLE	STABLE
16	FLT16-3PH	STABLE	STABLE	STABLE
17	FLT17-3PH	STABLE	STABLE	STABLE
18	FLT18-SB	STABLE	STABLE	STABLE
19	FLT19-SB	STABLE	STABLE	STABLE
20	FLT20-PO	STABLE	STABLE	STABLE
21	FLT21-PO	STABLE	STABLE	STABLE
22	FLT22-PO	STABLE	STABLE	STABLE
23	FLT23-SB	STABLE	STABLE	STABLE
24	FLT24-PO	STABLE	STABLE	STABLE
25	FLT25-PO	STABLE	STABLE	STABLE
26	FLT26-PO	STABLE	STABLE	STABLE
27	FLT27-3PH	STABLE	STABLE	STABLE
28	FLT28-3PH	STABLE	STABLE	STABLE
29	FLT29-PO	STABLE	STABLE	STABLE
30	FLT30-PO	STABLE	STABLE	STABLE
31	FLT31-3PH	STABLE	STABLE	STABLE
32	FLT32-1PH	STABLE	STABLE	STABLE
33	FLT33-3PH	STABLE	STABLE	STABLE
34	FLT34-1PH	STABLE	STABLE	STABLE
35	FLT35-3PH	STABLE	STABLE	STABLE
36	FLT36-3PH	STABLE	STABLE	STABLE
37	FLT37-1PH	STABLE	STABLE	STABLE
38	FLT38-3PH	STABLE	STABLE	STABLE
39	FLT39-1PH	STABLE	STABLE	STABLE
40	FLT40-3PH	STABLE	STABLE	STABLE
41	FLT41-1PH	STABLE	STABLE	STABLE
42	FLT42-3PH	STABLE	STABLE	STABLE
43	FLT43-1PH	STABLE	STABLE	STABLE
44	FLT44-3PH	STABLE	STABLE	STABLE
45	FLT45-PO	STABLE	STABLE	STABLE
46	FLT46-PO	STABLE	STABLE	STABLE
47	FLT47-PO	STABLE	STABLE	STABLE
48	FLT48-3PH	STABLE	STABLE	STABLE

Cont. No.	Cont. Name	2015 Summer Peak	2015 Winter Peak	2025 Summer Peak
49	FLT49-1PH	STABLE	STABLE	STABLE
50	FLT50-3PH	STABLE	STABLE	STABLE
51	FLT51-1PH	STABLE	STABLE	STABLE
52	FLT52-PO	STABLE	STABLE	STABLE
53	FLT53-PO	STABLE	STABLE	STABLE
54	FLT54-3PH	STABLE	STABLE	STABLE
55	FLT55-3PH	STABLE	STABLE	STABLE
56	FLT56-3PH	STABLE	STABLE	STABLE
57	FLT57-3PH	STABLE	STABLE	STABLE
58	FLT58-SB	STABLE	STABLE	STABLE
59	FLT59-PO	STABLE	STABLE	STABLE
60	FLT60-PO	STABLE	STABLE	STABLE
61	FLT61-PO	STABLE	STABLE	STABLE
62	FLT62-3PH	STABLE	STABLE	STABLE
63	FLT63-3PH	STABLE	STABLE	STABLE
64	FLT64-PO	STABLE	STABLE	STABLE
65	FLT65-PO	STABLE	STABLE	STABLE
66	FLT66-3PH 2015SP and 2015WP Only	STABLE	STABLE	N/A
67	FLT67-3PH 2025SP Only	N/A	N/A	STABLE
68	FLT68-3PH	STABLE	STABLE	STABLE
69	FLT69-PO	STABLE	STABLE	STABLE
70	FLT70-3PH	STABLE	STABLE	STABLE
71	FLT71-PO	STABLE	STABLE	STABLE
72	FLT72-3PH	STABLE	STABLE	STABLE
73	FLT73-3PH	STABLE	STABLE	STABLE
74	FLT74-3PH	STABLE	STABLE	STABLE
75	FLT75-3PH	STABLE	STABLE	STABLE
76	FLT76-3PH	STABLE	STABLE	STABLE
77	FLT77-PO	STABLE	STABLE	STABLE
78	FLT78-SB	STABLE	STABLE	STABLE
79	FLT79-SB	STABLE	STABLE	STABLE
80	FLT80-SB	STABLE	STABLE	STABLE
81	FLT81-SB 2025SP Only	N/A	N/A	STABLE
82	FLT82-3PH	STABLE	STABLE	STABLE
83	FLT83-3PH	STABLE	STABLE	STABLE
84	FLT84-3PH	STABLE	STABLE	STABLE
85	FLT85-3PH	STABLE	STABLE	STABLE
86	FLT86-PO	STABLE	STABLE	STABLE
87	FLT87-PO 2025SP Only	N/A	N/A	STABLE
88	FLT88-PO 2025SP Only	N/A	N/A	STABLE
89	FLT89-PO 2025SP Only	N/A	N/A	STABLE
90	FLT90-3PH	STABLE	STABLE	STABLE
91	FLT91-3PH	STABLE	STABLE	STABLE
92	FLT92-3PH 2025SP Only	N/A	N/A	STABLE

Cont. No.	Cont. Name	2015 Summer Peak	2015 Winter Peak	2025 Summer Peak
93	FLT93-3PH	STABLE	STABLE	STABLE
94	FLT94-3PH	STABLE	STABLE	STABLE
95	FLT95-3PH	STABLE	STABLE	STABLE
96	FLT96-3PH	STABLE	STABLE	STABLE
97	FLT97-PO	UNSTABLE	UNSTABLE	STABLE
98	FLT98-PO	STABLE	STABLE	STABLE
99	FLT99-PO	STABLE	STABLE	STABLE
100	FLT100-SB	STABLE	STABLE	STABLE
101	FLT101-SB	STABLE	STABLE	STABLE
102	FLT102-SB	STABLE	STABLE	STABLE
103	FLT103-SB Summer 2025SP Only	N/A	N/A	STABLE

Machine stability issues in the cluster dynamic stability simulation were reported to SPP. The resolution from SPP was to add the upgrade from the Holt County to Cherry County to Gentleman 345kV, to the unstable contingencies. Essentially, it required us to apply the second IDEV file "13.DIS-15-1_BUILD_RPLAN-PROJECT[15G 15SP 15WP].idv" to cases in 2015 SP and 2015 WP that exhibited the stability issues. If necessary, the same upgrade can be applied to the stand-alone cases, as indicated by SPP. Tests found that after the Holt County to Cherry County to Gentleman 345 kV upgrade was added to the base case, the stability issues were eliminated. Figure 3 show the results of the upgrade for Contingency #13 of 2015 SP Cluster.

For the voltage recovery violation observed for Fault #87 and #88, it was observed that there were very high voltages in the area of Petersburg for system intact conditions in the 2025 summer peak model. System intact condition voltages can be lowered using means such as switching off nearby capacitor banks and adjustment of transformer taps. Lower the system intact voltage conditions will alleviate these voltage recovery violations.

Plots of cluster dynamic stability results for each contingency and each season are given in Appendix C. Plots of stand-alone dynamic stability results for each contingency and each season are given in Appendix D. Instability results were replaced with the results with the upgrade for the same contingency. In all updated results, there was no generator tripping or disconnection from the transmission grid or unstable machines. Dynamic stability analysis thus concluded that Group 9 successfully rode through all contingencies specified by SPP and the nearby areas retained frequency and voltage stability.

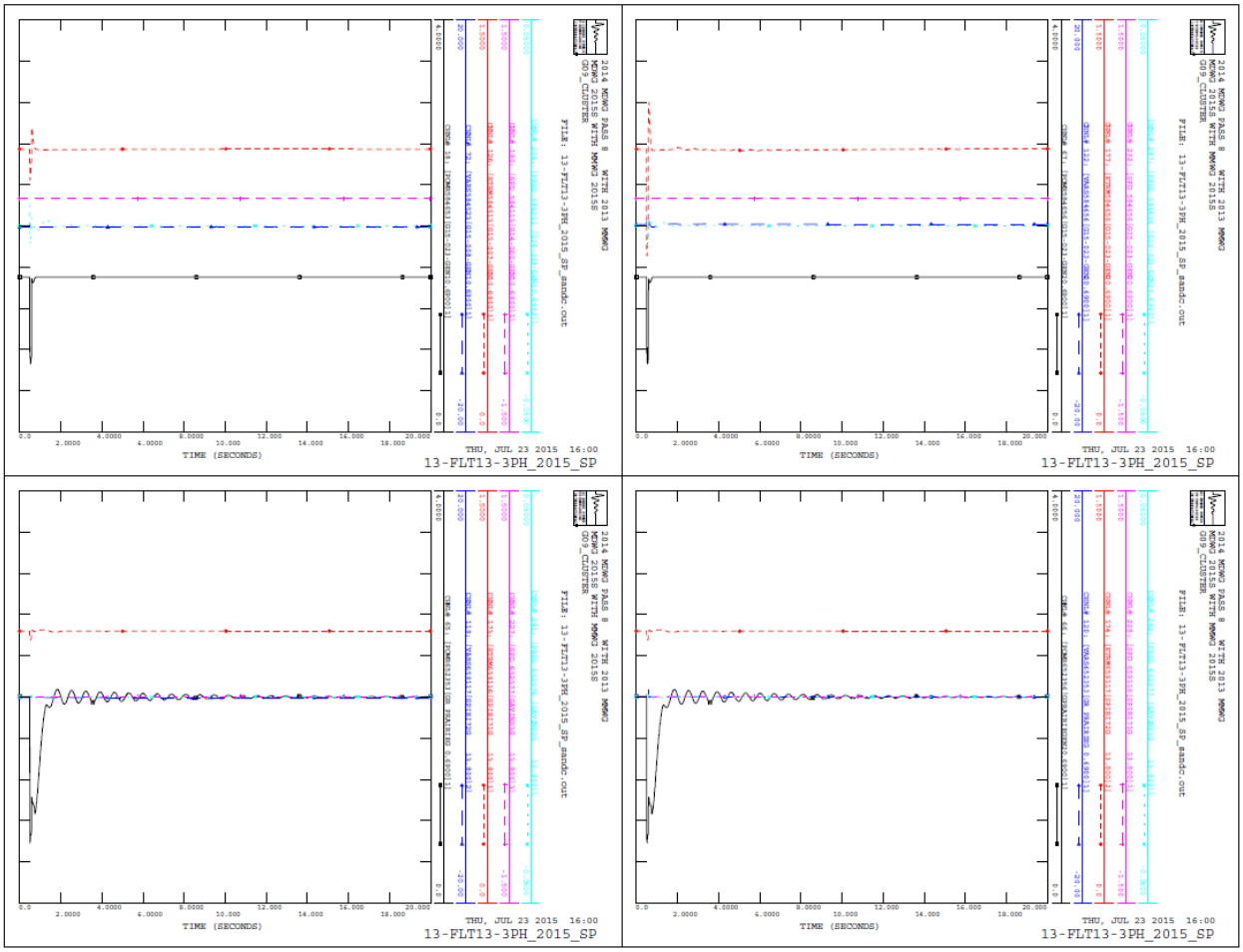

Figure 3. Stable Machines #584653, #584656, #652353, and #652356 in Contingency #13, 2015 SP Cluster after the upgrade

(Power-Black, Var-Blue, Eterm-Red, SPD-Pink and Freq-Cyan)

7. Power Factor Analysis

The power factor analysis was performed under the cluster bases and for all N-1 (N-1-1 for prior-outage contingencies) three-phase contingencies shown in the Fault Definition table in Appendix A. Single-phase contingencies and N-2 contingencies were excluded from the study. Prior to the run, the cluster base cases were slightly altered by turning off the reactive capability of the study project wind farms and by placing a new var generator at each wind farm high voltage bus for supporting the reactive power. The var generators were set to hold the voltage schedule at the interconnection project consistent with the voltage schedules in the provided base case or 1.0 p.u. voltage (whichever is higher).

Table 5 gives the voltage schedule at each interconnection request location in the original cluster base cases. Interconnection requests GEN-2014-059 and GEN-2015-023 having the voltage schedules at 0.9998 p.u. and 0.9988 in the 2015 Summer Peak base case, below 1.0 p.u. voltage, were rescheduled to 1.0 p.u. voltage during the run.

Table 5: Base Case Voltages at the Interconnection Request POI Bus

Request	POI	2015 Summer Peak (p.u.)	2015 Winter Peak (p.u.)	2025 Summer Peak (p.u.)
GEN-2014-023	560718	1.0241	1.0214	1.0276
GEN-2014-059	560014	0.9998	1.0137	1.0073
GEN-2014-060	560733	1.0319	1.0352	1.0192
GEN-2015-007	640226	1.0044	1.0024	1.0128
GEN-2015-008	640521	1.0299	1.0390	1.0316
GEN-2015-023	640510	0.9988	1.0102	1.0099

The power factor analysis results for Group 9 interconnection requests are presented in Appendix E tables. We marked in pink the contingency at which the required power factor at the study POI project is beyond the normal required capability (from 0.95 lagging to 0.95 leading) of the studied wind farm. We also provided a summary table below of the maximum leading/lagging reactive power demand and power factor found by the power factor analysis at the POIs.

Table 6: Summary of Power Factor Analysis at the POI

Request	Capacity	Capacity	Reactive Power/Power Factor at POI	
			Leading (absorbing vars)	Lagging (providing vars)
GEN-2014-023	79.9 MW	560718	-46.9 Mvar / PF = 0.862	73.0 Mvar / PF = 0.738
GEN-2014-059	160.0 MW	560014	-44.8 Mvar / PF = 0.963	99.8 Mvar / PF = 0.848
GEN-2014-060	125.8 MW	560733	-44.1 Mvar / PF = 0.944	30.7 Mvar / PF = 0.971
GEN-2015-007	160.0 MW	640226	-129.4 Mvar / PF = 0.778	66.2 Mvar / PF = 0.924
GEN-2015-008	150.4 MW	640521	-46.5 Mvar / PF = 0.955	10.8 Mvar / PF = 0.997
GEN-2015-023	300.7 MW	640510	-24.0 Mvar / PF = 0.997	161.2 Mvar / PF = 0.881

NOTE: Per the SPP Tariff as reactive power is required for all projects, the final requirement in the GIA will be the pro-forma 0.95 lagging to 0.95 leading at the point of interconnection.

8. No Wind Conditions Analysis

S&C has performed an analysis of no wind conditions for the interconnection requests at the 345-kV or 230-kV bus. The interconnection projects at 115 kV level were excluded from the study. The no-wind analysis was performed under the Cluster scenarios by taking the interconnection wind generator out of service and placing a shunt reactor at the project substation high side to offset the reactive power that comes from the capacitance of the project's transmission lines and collector cables. The size of the shunt reactor was adjusted such that the net Mvar flow into the POI from the studied wind farm was approximately zero. Table 7 gives the shunt reactor Mvar for the studied projects.

Table 7: Shunt Reactor Mvar Determined by No Wind Study

Request	POI	2015 Summer Peak	2015 Winter Peak	2025 Summer Peak
GEN-2014-023	560718	5.6	5.5	5.6
GEN-2014-059	560014	7.5	7.4	7.5
GEN-2015-007	640226	16.7	16.7	16.7
GEN-2015-023	640510	17.2	17.2	17.3

9. Short-Circuit Study

A short-circuit study has been performed on the power flow models for the 2025 Summer Peak Season for each generator using the Cluster Scenario model. Short-circuit analysis includes applying a 3-phase fault on buses up to 5 levels away from the POI of each interconnection request project. PSS/E "Automatic Sequence Fault Calculation (ASCC)" fault analysis module was used for the purpose of short-circuit analysis. The results of the short-circuit analysis have been recorded for all the buses up to five levels away from the point of interconnection of each interconnection request project. Detailed results of the short-circuit study are provided in Appendix F.

10. CONCLUSIONS AND RECOMMENDATIONS

- Group 9 dynamic analysis results indicated that 2015 Summer Peak and 2015 Winter Peak Cluster base cases exhibited instabilities in certain contingencies. After the Holt County to Cherry County to Gentleman 345 kV upgrade was added to the base case, the stability issues were eliminated. 2025 Summer Peak cluster base cases that already had these upgrades rode through all contingencies and remained stable.

- Group 9 dynamic analysis results indicated that 2015 Summer Peak and 2015 Winter Peak Stand-Alone GEN-2015-023 base cases exhibited instability in certain contingencies. After the Holt County to Cherry County to Gentleman 345 kV upgrade was added to the base case the stability issues were eliminated. Note that the other (5) stand-alone base cases, in 2015 Summer Peak and 2015 Winter Peak, do not require these upgrades and remain stable during the contingencies. 2025 Summer Peak stand-alone base cases that already had the upgrades rode through all contingencies and remained stable.

- Group 9 dynamic analysis results, for cluster and stand-alone scenarios, indicated that with the necessary upgrade mentioned above, the interconnection request projects are expected to successfully ride through all N-1, N-1-1, and N-2 fault contingency specified by SPP, retaining angular, frequency and voltage stability at the nearby areas and meeting the transient voltage recovery requirement by SPP. It is thus concluded that Group 9 study projects with the required upgrades are expected to successfully interconnect into the transmission system at their desired locations for 100% power outputs.
- For the voltage recovery violation observed for Fault #87 and #88, it was observed that there were very high voltages in the area of Petersburg for system intact conditions in the 2025 summer peak model. System intact condition voltages can be lowered using means such as switching off nearby capacitor banks and adjustment of transformer taps. Lower the system intact voltage conditions will alleviate these voltage recovery violations.

- The results of power factor analysis indicate that all interconnection requests are required to maintain a power factor of 0.95 lagging to 0.95 leading at the POI to meet SPP's requirements.

- The results of no-wind study suggested that to offset the reactive power from the capacitance of the interconnection project's transmission lines and collector cables during the no-wind conditions, a 5.6 Mvar shunt reactor size is required for the GEN-2014-023 high voltage side, 7.5 Mvar for GEN-2014-059, 16.7 Mvar for GEN-2015-007, and 17.3 Mvar for GEN-2015-023.
- A short-circuit study has been performed on the power flow models for the 2025 Summer Peak Season for each generator using the Cluster Scenario model. A 3-phase fault is applied on buses up to 5 levels away from the POI of each interconnection request project and the results of the study have been presented.

APPENDIX A

SPP GROUP 9 FAULT DEFINITIONS (SUBMITTED IN A SEPARATE FILE)

APPENDIX B

SOUTHWEST POWER POOL DISTURBANCE PERFORMANCE REQUIREMENTS (SUBMITTED IN A SEPARATE FILE)

APPENDIX C

DYNAMIC STABILITY PLOTS FOR CLUSTER SCENARIO (SUBMITTED IN SEPARATE FILES FROM APPENDIX C-1 TO C-3)

C-1 Group 9 Cluster Dynamic Stability Plots For 2015 Summer Peak Case

C-2 Group 9 Cluster Dynamic Stability Plots For 2015 Winter Peak Case

C-3 Group 9 Cluster Dynamic Stability Plots For 2025 Summer Peak Case

Each contingency consists of (65) subplots:

- Subplot #1 are the (6) monitor system phase angle channels in the original snapshot file provided by SPP.
- Subplot #2 to Subplot #55 are results for (54) generators in the scope of study.
- Subplots #56 to Subplot #60 are voltages at the POI buses in the scope of study.
- Subplots #61 to Subplot #65 are frequencies at the POI buses in the scope of study.

APPENDIX D

DYNAMIC STABILITY PLOTS FOR STAND-ALONE SCENARIO (SUBMITTED IN SEPARATE FILE FROM APPENDIX D-1 TO D-18)

D-1 Group 9 Stand-Alone "GEN-2014-023" Dynamic Stability Plots For 2015 Summer Peak Case

D-2 Group 9 Stand-Alone "GEN-2014-023" Dynamic Stability Plots For 2015 Winter Peak Case

D-3 Group 9 Stand-Alone "GEN-2014-023" Dynamic Stability Plots For 2025 Summer Peak Case

D-4 Group 9 Stand-Alone "GEN-2014-059" Dynamic Stability Plots For 2015 Summer Peak Case

D-5 Group 9 Stand-Alone "GEN-2014-059" Dynamic Stability Plots For 2015 Winter Peak Case

D-6 Group 9 Stand-Alone "GEN-2014-059" Dynamic Stability Plots For 2025 Summer Peak Case

D-7 Group 9 Stand-Alone "GEN-2014-060" Dynamic Stability Plots For 2015 Summer Peak Case

D-8 Group 9 Stand-Alone "GEN-2014-060" Dynamic Stability Plots For 2015 Winter Peak Case

D-9 Group 9 Stand-Alone "GEN-2014-060" Dynamic Stability Plots For 2025 Summer Peak Case

D-10 Group 9 Stand-Alone "GEN-2015-007" Dynamic Stability Plots For 2015 Summer Peak Case

D-11 Group 9 Stand-Alone "GEN-2015-007" Dynamic Stability Plots For 2015 Winter Peak Case

D-12 Group 9 Stand-Alone "GEN-2015-007" Dynamic Stability Plots For 2025 Summer Peak Case

D-13 Group 9 Stand-Alone "GEN-2015-008" Dynamic Stability Plots For 2015 Summer Peak Case

D-14 Group 9 Stand-Alone "GEN-2015-008" Dynamic Stability Plots For 2015 Winter Peak Case

D-15 Group 9 Stand-Alone "GEN-2015-008" Dynamic Stability Plots For 2025 Summer Peak Case

D-16 Group 9 Stand-Alone "GEN-2015-023" Dynamic Stability Plots For 2015 Summer Peak Case

D-17 Group 9 Stand-Alone "GEN-2015-023" Dynamic Stability Plots For 2015 Winter Peak Case

D-18 Group 9 Stand-Alone "GEN-2015-023" Dynamic Stability Plots For 2025 Summer Peak Case

Each contingency consists of (65) subplots:

- Subplot #1 are the six (6) monitor system phase angle channels in the original snapshot file provided by SPP.
- Subplot #2 to Subplot #55 are results for (54) generators in the scope of study.
- Subplots #56 to Subplot #60 are voltages at the POI buses in the scope of study.
- Subplots #61 to Subplot #65 are frequencies at the POI buses in the scope of study.

APPENDIX E

POWER FACTOR ANALYSIS RESULTS (SUBMITTED IN SEPARATE FILE FROM APPENDIX E-1 TO E-6)

E-1 Group 9 Power Factor Results for Interconnection Request GEN-2014-023 (#560718)

E-2 Group 9 Power Factor Results for Interconnection Request GEN-2014-059 (#560014)

E-3 Group 9 Power Factor Results for Interconnection Request GEN-2014-060 (#560733)

E-4 Group 9 Power Factor Results for Interconnection Request GEN-2015-007 (#640226)

E-5 Group 9 Power Factor Results for Interconnection Request GEN-2015-008 (#640521)

E-6 Group 9 Power Factor Results for Interconnection Request GEN-2015-023 (#640510)

APPENDIX F

SHORT-CIRCUIT STUDY RESULTS (SUBMITTED IN A SEPARATE FILE)

Fault Definitions

Cont. No.	Cont. Name	Description	GEN-2014-023	GEN-2014-059	GEN-2014-060	GEN-2015-007	GEN-2015-008	GEN-2015-023
1	FLT01-3PH	3 phase fault on the G14-023 TAP (560718) to Ft Randall (652509) 230kV line circuit 1, near G14-023 TAP. a. Apply fault at the G14-023 TAP 230kV bus. b. Clear fault after 6 cycles and trip the faulted line and remove fault.	X				X	X
2	FLT02-3PH	3 phase fault on the G14-023 TAP (560718) to Meadow Grove (640540) 230kV line circuit 1, near G14-023 TAP. a. Apply fault at the G14-023 TAP 230kV bus. b. Clear fault after 6 cycles and trip the faulted line and remove fault.	X					
3	FLT03-3PH	3 phase fault on the Meadow Grove (640540) to Columbus (640133) 230kV line circuit 1, near Meadow Grove 230kV. a. Apply fault at the Meadow Grove 230kV bus. b. Clear fault after 6 cycles and trip the faulted line.	X				X	X
4	FLT04-3PH	3 phase fault on the Columbus (640133) to Shell Creek (640343) 230kV line circuit 1, near Columbus. a. Apply fault at the Columbus 230kV bus. b. Clear fault after 6 cycles and trip the faulted line and remove fault.	X					
5	FLT05-3PH	3 phase fault on the Columbus (640133) to Columbus West (640131) 230kV line circuit 1, near Columbus. a. Apply fault at the Columbus 230kV bus. b. Clear fault after 6 cycles and trip the faulted line and remove fault.	X					
6	FLT06-3PH	3 phase fault on the Columbus (640133) to East Columbus (640126) 230kV line circuit 1, near Columbus. a. Apply fault at the Columbus 230kV bus. b. Clear fault after 6 cycles and trip the faulted line and remove fault.	X					
7	FLT07-3PH	3 phase fault on the Columbus (640133) 230/Kelly (640134) 115/(640135) 13.2kV Transformer circuit 1, near Columbus 230kV. a. Apply fault at the Columbus 230kV bus. b. Clear fault after 5.5 cycles, trip the faulted line, and remove the fault.	X					
8	FLT08-3PH	3 phase fault on the Shell Creek (640342) to East Columbus (640125) 345kV line circuit 1, near Shell Creek. a. Apply fault at the Shell Creek 345kV bus. b. Clear fault after 5 cycles and trip the faulted line and remove fault.	X			X		
9	FLT08-3PH	3 phase fault on the Hoskins (640226) to Shell Creek (640342) 345kV line circuit 1, near Hoskins (640226). a. Apply fault at the Hoskins 345kV bus. b. Clear fault after 5 cycles and trip the faulted line and remove fault.	X			X	X	
10	FLT10-3PH	3 phase fault on the Hoskins (640226) to Raun (635200) 345kV line circuit 1, near Hoskins. a. Apply fault at the Hoskins 345kV bus. b. Clear fault after 5 cycles and trip the faulted line and remove fault.	X			X		

Cont. No.	Cont. Name	Description	GEN-2014-023	GEN-2014-059	GEN-2014-060	GEN-2015-007	GEN-2015-008	GEN-2015-023
11	FLT11-3PH 2025SP Only	**ONLY for 6/1/2016 and BEYOND** 3 phase fault on the Hoskins (640226) to Antelope (640520) 345kV line circuit 1, near Hoskins. a. Apply fault at the Hoskins 345kV bus. b. Clear fault after 5 cycles and trip the faulted line and remove fault.	X			X	X	
12	FLT12-3PH	3 phase fault on the Grand Island (652571) to McCool (640271) 345kV line circuit 1, near Grand Island. a. Apply fault at the Grand Island 345kV bus. b. Clear fault after 5 cycles and trip the faulted line and remove fault.	X					X
13	FLT13-3PH	3 phase fault on the Grand Island (652571) to Holt County (640510) 345kV line circuit 1, near Grand Island. a. Apply fault at the Grand Island 345kV bus. b. Clear fault after 5 cycles and trip the faulted line and remove fault.	X					X
14	FLT14-3PH	3 phase fault on the Ft. Thompson (652506) to Grand Prairie (652532) 345kV line circuit 1, near Ft. Thompson. a. Apply fault at the Ft. Thompson 345kV bus. b. Clear fault after 5 cycles and trip the faulted line and remove fault.	X					X
15	FLT15-3PH	3 phase fault on the Ft Thompson (652506) to Leland Olds (659105) 345kV line circuit 1, near Ft Thompson. a. Apply fault at the Ft Thompson 345kV bus. b. Clear fault after 5 cycles and trip the faulted line and remove fault.	X					X
16	FLT16-3PH	3 phase fault on the Ft Randall (652509) to Utica Junction (652526) 230kV line circuit 1, near Ft Randall. a. Apply fault at the Ft Randall 230kV bus. b. Clear fault after 6 cycles and trip the faulted line and remove fault.	X					X
17	FLT17-3PH	3 phase fault on the Ft Randall (652509) to Sioux City (652565) 230kV line circuit 1, near Ft Randall. a. Apply fault at the Ft Randall 230kV bus. b. Clear fault after 6 cycles and trip the faulted line and remove fault.	X					X
18	FLT18-SB	**Ft Randall 230kV Stuck Breaker Scenario 1** a. Apply single phase fault at the Ft Randall (652509) 230kV bus. b. Wait 16 cycles and remove fault. c. Trip Ft Randall (652509) to Utica Junction (652526) 230kV line circuit 1. d. Trip Ft Randall (652509) 230/(652510) 115kV transformer circuit 1.	X					
19	FLT19-SB	**Ft Randall 230kV Stuck Breaker Scenario 2** a. Apply single phase fault at the Ft Randall (652509) 230kV bus. b. Wait 16 cycles and remove fault. c. Trip Ft Randall (652509) to Sioux City (652565) 230kV line circuit 1. d. Trip Ft Randall (652509) 230/(652510) 115kV transformer circuit 1.	X					

Cont. No.	Cont. Name	Description	GEN-2014-023	GEN-2014-059	GEN-2014-060	GEN-2015-007	GEN-2015-008	GEN-2015-023
20	FLT20-PO	**Ft. Randall Prior Outage Scenario 1** a. Prior Outage: Switch out Ft Randall (652509) to Utica Junction (652526) 230kV circuit 1 and solve. b. Apply 3 phase fault on the Ft Randall (652509) to Sioux City (652565) 230kV line circuit 1, near Ft Randall. c. Clear fault after 6 cycles and trip the faulted line and remove fault.	X					
21	FLT21-PO	**Ft. Randall Prior Outage Scenario 2** a. Prior Outage: Switch out Ft Randall (652509) to Utica Junction (652526) 230kV circuit 1 and solve. b. Apply 3 phase fault on the Meadow Grove (640540) to Columbus (640133) 345kV line circuit 1, near Ft Randall. c. Clear fault after 6 cycles and trip the faulted line and remove fault.	X					
22	FLT22-PO	**Ft. Randall Prior Outage Scenario 3** a. Prior Outage: Switch out Ft Randall (652509) to Utica Junction (652526) 230kV circuit 1 and solve. b. Apply 3 phase fault on the Ft Randall (652509) 230/(652510) 115kV transformer circuit 1, near Ft Randall 230kV. c. Clear fault after 5.5 cycles and trip the faulted line and remove fault.	X					
23	FLT23-SB	**Columbus 230kV Stuck Breaker Scenario 1** a. Apply single phase fault at the Columbus (640133) 230kV bus. b. Wait 16 cycles and remove fault. c. Trip entire Columbus (640133) 230kV bus.	X					
24	FLT24-PO	**Columbus Prior Outage Scenario 1** a. Prior Outage: Switch out Columbus (640133) to East Columbus (640126) 230kV circuit 1 and solve. b. Apply 3 phase fault on the Columbus (640133) 230/Kelly (640134) 115/(640135) 13.2kV transformer circuit 1, near Columbus 230kV. c. Clear fault after 5.5 cycles, trip the faulted line, and remove fault.	X					
25	FLT25-PO	**Columbus Prior Outage Scenario 2** a. Prior Outage: Switch out Columbus (640133) to East Columbus (640126) 230kV circuit 1 and solve. b. Apply 3 phase fault on the Columbus (640133) to Shell Creek (640343) 230kV circuit 1, near Columbus 230kV. c. Clear fault after 6 cycles, trip the faulted line, and remove fault.	X					
26	FLT26-PO	**Utica Junction Prior Outage Scenario 1** a. Prior Outage: Switch out Utica Junction (652526) to Rasmussen (652536) 230kV circuit 1 and solve. b. Apply 3 phase fault on the Utica Junction (652526) to VFODNES4 (652398) 230kV line circuit 1, near Utica Junction. c. Clear fault after 6 cycles and trip the faulted line and remove the fault.	X					

Cont. No.	Cont. Name	Description	GEN-2014-023	GEN-2014-059	GEN-2014-060	GEN-2015-007	GEN-2015-008	GEN-2015-023
27	FLT27-3PH	3 phase fault on the Raun (635200) to S3451 (645451) 345kV line circuit 1, near Raun 345kV. a. Apply fault at the Raun 345kV bus. b. Clear fault after 5 cycles and trip the faulted line.	X			X		
28	FLT28-3PH	3 phase fault on the Raun (635200) to Sioux City (652564) 345kV line circuit 1, near Raun 345kV. a. Apply fault at the Raun 345kV bus. b. Clear fault after 5 cycles and trip the faulted line.	X			X		
29	FLT29-PO	**Hoskins 345kV Prior Outage Scenario 1** a. Prior Outage: Switch out Hoskins (640226) to Shell Creek (640342) 345kV circuit 1 and solve. b. Apply 3 phase fault on Hoskins (640226) 345/(640227) 230/(643082) 13.8kV transformer circuit 1, near Hoskins. c. Clear fault after 4.5 cycles and trip the faulted line and remove fault.	X			X	X	
30	FLT30-PO	**Hoskins 345kV Prior Outage Scenario 2** a. Prior Outage: Switch out Hoskins (640226) to Shell Creek (640342) 345kV circuit 1 and solve. b. Apply 3 phase fault on Hoskins (640226) 345/(640228) 115/(640231) 13.8kV transformer circuit 1, near Hoskins. c. Clear fault after 4.5 cycles and trip the faulted line and remove fault.	X			X		
31	FLT31-3PH	3 phase fault on the GEN-2014-059 Tap (560014) to Ogallala (640302) 230kV line circuit 1, near GEN-2014-059 Tap. a. Apply fault at the GEN-2014-059 Tap 230kV bus. b. Clear fault after 6 cycles and trip the faulted line.		X				
32	FLT32-1PH	Single Phase fault like the previous with 16 cycles before breaker action.		X				
33	FLT33-3PH	3 phase fault on the GEN-2014-059 Tap (560014) to Sidney (659134) 230kV line circuit 1, near GEN-2014-059 Tap. a. Apply fault at the GEN-2014-059 Tap 230kV bus. b. Clear fault after 6 cycles and trip the faulted line.		X				
34	FLT34-1PH	Single Phase fault like the previous with 16 cycles before breaker action.		X				
35	FLT35-3PH	3 phase fault on the Ogallala (640302) 230/(659801) 115/(643115) 13.8kV transformer circuit 1, near Ogallala. a. Apply fault at the Ogallala 230kV bus. b. Clear fault after 5.5 cycles and trip the faulted line.		X				
36	FLT36-3PH	3 phase fault on the Ogallala (640302) to Gentleman (640184) 230kV line circuit 1, near Ogallala. a. Apply fault at the Ogallala 230kV bus. b. Clear fault after 6 cycles and trip the faulted line.		X				
37	FLT37-1PH	Single Phase fault like the previous with 16 cycles before breaker action.		X				
38	FLT38-3PH	3 phase fault on the Keystone (640252) to Sidney (659133) 345kV line circuit 1, near Keystone. a. Apply fault at the Keystone 345kV bus. b. Clear fault after 5 cycles and trip the faulted line.		X				

Cont. No.	Cont. Name	Description	GEN-2014-023	GEN-2014-059	GEN-2014-060	GEN-2015-007	GEN-2015-008	GEN-2015-023
39	FLT39-1PH	Single Phase fault like the previous with 14 cycles before breaker action.		X				
40	FLT40-3PH	3 phase fault on the Keystone (640252) to Gentleman (640183) 345kV line circuit 1, near Keystone. a. Apply fault at the Keystone 345kV bus. b. Clear fault after 5 cycles and trip the faulted line.		X				
41	FLT41-1PH	Single Phase fault like the previous with 14 cycles before breaker action.		X				
42	FLT42-3PH	3 phase fault on the Gentleman (640184) to N Platte (640286) 230kV line circuit 1, near Gentleman. a. Apply fault at the Gentleman 230kV bus. b. Clear fault after 5 cycles and trip the faulted line.		X				
43	FLT43-1PH	Single Phase fault like the previous with 16 cycles before breaker action.		X				
44	FLT44-3PH	3 phase fault on the Sidney (659134) 230/(652572) 115/(659803) 13.8kV transformer circuit 1, near Sidney. a. Apply fault at the Sidney 230kV bus. b. Clear fault after 5.5 cycles and trip the faulted line.		X				
45	FLT45-PO	**Sidney 230kV Prior Outage Scenario 1** a. Prior Outage: Switch out Sidney (659133) to Keystone (640252) 345kV circuit 1 and solve. b. Apply 3 phase fault on Sidney (659134) 230/(652572) 115/(659803) 13.8kV transformer circuit 1, near Sidney. c. Clear fault after 6 cycles and trip the faulted line and remove fault.		X				
46	FLT46-PO	**Ogallala 230kV Prior Outage Scenario 1** a. Prior Outage: Switch out Ogallala (640302) 230/(659801) 115/(643115) 13.8kV transformer circuit 1 and solve. b. Apply 3 phase fault on Sidney (659133) to Keystone (640252) 345kV circuit 1, near Sidney. c. Clear fault after 5 cycles and trip the faulted line and remove fault.		X				
47	FLT47-PO	**Gentleman 345kV Prior Outage Scenario 1** a. Prior Outage: Switch out Gentleman (640183) to Sweetwater (640374) 345kV line circuit 1 and solve. b. Apply 3 phase fault on Gentleman (640183) to Sweetwater (640374) 345kV circuit 2, near Gentleman. c. Clear fault after 5 cycles and trip the faulted line and remove fault.		X				X
48	FLT48-3PH	3 phase fault on the GEN-2014-060 Tap (560733) to Hildreth (640222) 115kV line circuit 1, near GEN-2014-060 Tap. a. Apply fault at the Gentleman 230kV bus. b. Clear fault after 5 cycles and trip the faulted line.			X			
49	FLT49-1PH	Single Phase fault like the previous with 19 cycles before breaker action.			X			
50	FLT50-3PH	3 phase fault on the GEN-2014-060 Tap (560733) to Pauline (640313) 115kV line circuit 1, near GEN-2014-060 Tap. a. Apply fault at the Gentleman 230kV bus. b. Clear fault after 5 cycles and trip the faulted line.			X			
51	FLT51-1PH	Single Phase fault like the previous with 19 cycles before breaker action.			X			

Cont. No.	Cont. Name	Description	GEN-2014-023	GEN-2014-059	GEN-2014-060	GEN-2015-007	GEN-2015-008	GEN-2015-023
52	FLT52-PO	**Holdredge 115kV Prior Outage Scenario 1** a. Prior Outage: Switch out Holdredge (640224) to Axtell (640066) 115kV line circuit 1 and solve. b. Apply 3 phase fault on Axtell (640065) to Pauline (640312) 345kV circuit 1, near Axtell. c. Clear fault after 4.5 cycles and trip the faulted line and remove fault.			X			
53	FLT53-PO	**Holdredge 115kV Prior Outage Scenario 2** a. Prior Outage: Switch out Holdredge (640224) to Axtell (640066) 115kV line circuit 1 and solve. b. Apply 3 phase fault on Holdredge (640224) to Johnson 2 (640242) 115kV circuit 1, near Holdredge. c. Clear fault after 6.5 cycles and trip the faulted line and remove fault.			X			
54	FLT54-3PH	3 phase fault on the Pauline (640313) 115/(640312) 345/(640315) 13.8kV transformer circuit 1, near Pauline. a. Apply fault at the Pauline 115kV bus. b. Clear fault after 5.5 cycles and trip the faulted line.			X			
55	FLT55-3PH	3 phase fault on the Hastings (640215) to Hastings City (641088) 115kV line circuit Z1, near Hastings City. a. Apply fault at the Hastings City 115kV bus. b. Clear fault after 6.5 cycles and trip the faulted line.			X			
56	FLT56-3PH	3 phase fault on the Pauline (640312) to Moore (640277) 345kV line circuit 1, near Pauline. a. Apply fault at the Pauline 345kV bus. b. Clear fault after 5 cycles and trip the faulted line.			X			
57	FLT57-3PH	3 phase fault on the Pauline (640312) to Moore (640277) 345kV line circuit 1, near Pauline. c. Apply fault at the Pauline 345kV bus. d. Clear fault after 5 cycles and trip the faulted line.			X			
58	FLT58-SB	**Pauline 115kV Prior Outage Scenario 1** a. Prior Outage: Switch out Pauline (640313) to Hastings (640215) 115kV circuit 1 and solve. b. Apply 3 phase fault on the GEN-2008-123N Tap (560137) to Guide Rock (640206) 115kV line circuit 1, near GEN-2008-123N Tap. c. Clear fault after 6.5 cycles and trip the faulted line and remove fault.			X			
59	FLT59-PO	**Pauline 345kV Prior Outage Scenario 1** a. Prior Outage: Switch out Pauline (640312) to Moore (640277) 345kV circuit 1 and solve. b. Apply 3 phase fault on the GEN-2008-123N Tap (560137) to Guide Rock (640206) 115kV line circuit 1, near GEN-2008-123N Tap. c. Clear fault after 6.5 cycles and trip the faulted line and remove fault.			X			

Cont. No.	Cont. Name	Description	GEN-2014-023	GEN-2014-059	GEN-2014-060	GEN-2015-007	GEN-2015-008	GEN-2015-023
60	FLT60-PO	**Pauline 115kV Prior Outage Scenario 2** a. Prior Outage: Switch out Pauline (640313) to Hastings (640215) 115kV circuit 1 and solve. b. Apply 3 phase fault on the Pauline (640313) to Hastings (640215) 115kV circuit 2, near Pauline. c. Clear fault after 6.5 cycles and trip the faulted line and remove fault.			X			
61	FLT61-PO	**Hastings EC 115kV Prior Outage Scenario 1** a. Prior Outage: Switch out Hastings EC (641087) to Sutton (640372) 115kV circuit 1 and solve. b. Apply 3 phase fault on the Hastings EC (641087) to S 281 7 (641090) 115kV line circuit 1, near Hastings EC. c. Clear fault after 6.5 cycles and trip the faulted line and remove fault.			X			
62	FLT62-3PH	3 phase fault on the Hoskins (640226) 345/(640227) 230/(643082) 13.8kV transformer circuit 1, near Hoskins. a. Apply 3 phase fault on Hoskins 345kV. b. Clear fault after 4.5 cycles and trip the faulted line and remove fault.				X		
63	FLT63-3PH	3 phase fault on the Hoskins (640226) 345/(640228) 115/(640231) 13.8kV transformer circuit 1, near Hoskins. a. Apply 3 phase fault on Hoskins 345kV. b. Clear fault after 4.5 cycles and trip the faulted line and remove fault.				X		
64	FLT64-PO	**Hoskins 345kV Prior Outage Scenario 3** a. Prior Outage: Switch out Hoskins (640226) 345/(640228) 115/(640231) 13.8kV transformer circuit 1 and solve. b. Apply 3 phase fault Hoskins (640226) 345/(640227) 230/(643082) 13.8kV transformer circuit 1, near Hoskins. c. Clear fault after 4.5 cycles and trip the faulted line and remove fault.				X		
65	FLT65-PO	**Hoskins 345kV Prior Outage Scenario 4** a. Prior Outage: Switch out Hoskins (640226) 345/(640227) 230/(643082) 13.8kV transformer circuit 1 and solve. b. Apply 3 phase fault Hoskins (640226) 345/(640228) 115/(640231) 13.8kV transformer circuit 1, near Hoskins. c. Clear fault after 4.5 cycles and trip the faulted line and remove fault.				X		
66	FLT66-3PH 2015SP and 2015WP Only	**ONLY THROUGH to 6/1/2016** 3 phase fault on the Raun (635200) to Lakefield (631138) 345kV line circuit 1, near Raun 345kV. a. Apply fault at the Raun 345kV bus. b. Clear fault after 5 cycles and trip the faulted line.				X		
67	FLT67-3PH 2025SP Only	**ONLY for 6/1/2016 and BEYOND** 3 phase fault on the Raun (635200) to OBrien (635368) 345kV line circuit 1, near Raun 345kV. a. Apply fault at the Raun 345kV bus. b. Clear fault after 5 cycles and trip the faulted line.				X		

Cont. No.	Cont. Name	Description	GEN-2014-023	GEN-2014-059	GEN-2014-060	GEN-2015-007	GEN-2015-008	GEN-2015-023
68	FLT68-3PH	3 phase fault on the Raun (635200) to Lehigh (636010) 345kV line circuit 1, near Raun 345kV. a. Apply fault at the Raun 345kV bus. b. Clear fault after 5 cycles and trip the faulted line.				X		
69	FLT69-PO	**Raun 345kV Prior Outage Scenario 1** a. Prior Outage: Switch out Raun (635200) to Lehigh (636010) 345kV line circuit 1 and solve. b. Apply 3 phase fault Raun (635200) to Sioux City (652564) 345kV line circuit 1, near Hoskins. c. Clear fault after 4.5 cycles and trip the faulted line and remove fault.				X		
70	FLT70-3PH	3 phase fault on the Hoskins (640227) to Dixon Co (560347) 230kV line circuit 1, near Hoskins 230kV. a. Apply fault at the Hoskins 230kV bus. b. Clear fault after 6 cycles and trip the faulted line.				X		
71	FLT71-PO	**Hoskins 230kV Prior Outage Scenario 5** a. Prior Outage: Switch out Hoskins (640227) 230/(640228) 115/(643083) 13.8kV transformer circuit 1 and solve. b. Apply 3 phase fault Hoskins (640226) 345/(640228) 115/(640231) 13.8kV transformer circuit 1, near Hoskins. c. Clear fault after 4.5 cycles and trip the faulted line and remove fault.				X		
72	FLT72-3PH	3 phase fault on the Twin Church (640386) to Dixon Co (560347) 230kV line circuit 1, near Twin Church 230kV. a. Apply fault at the Twin Church 230kV bus. b. Clear fault after 6 cycles and trip the faulted line.				X		
73	FLT73-3PH	3 phase fault on the Hoskins (640228) to Norfolk N (640296) 115kV line circuit 1, near Hoskins 115kV. a. Apply fault at the Hoskins 115kV bus. b. Clear fault after 6.5 cycles and trip the faulted line.				X	X	
74	FLT74-3PH	3 phase fault on the Hoskins (640228) to Norfolk (640298) 115kV line circuit 1, near Hoskins 115kV. a. Apply fault at the Hoskins 115kV bus. b. Clear fault after 6.5 cycles and trip the faulted line.				X	X	
75	FLT75-3PH	3 phase fault on the Hoskins (640228) to Stanton N (640363) 115kV line circuit 1, near Hoskins 115kV. a. Apply fault at the Hoskins 115kV bus. b. Clear fault after 6.5 cycles and trip the faulted line.				X	X	
76	FLT76-3PH	3 phase fault on the Hoskins (640228) to Belden (640080) 115kV line circuit 1, near Hoskins 115kV. a. Apply fault at the Hoskins 115kV bus. b. Clear fault after 6.5 cycles and trip the faulted line.				X	X	

Cont. No.	Cont. Name	Description	GEN-2014-023	GEN-2014-059	GEN-2014-060	GEN-2015-007	GEN-2015-008	GEN-2015-023
77	FLT77-PO	**Hoskins 115kV Prior Outage Scenario 6** a. Prior Outage: Switch out Hoskins (640227) 230/(640228) 115/(643083) 13.8kV transformer circuit 1 and solve. b. Apply 3 phase fault Hoskins (640228) to Norfolk N (640296) 115kV line circuit 1, near Hoskins 115kV, near Hoskins. c. Clear fault after 6.5 cycles and trip the faulted line and remove fault.				X	X	
78	FLT78-SB	**Hoskins 345kV Stuck Breaker Scenario 1** a. Apply single phase fault at the Hoskins (640226) 345kV bus. b. Wait 13.5 cycles and remove fault. c. Trip Hoskins (640226) 345/(640227) 230/(643082) 13.8kV transformer circuit 1. d. Trip Hoskins (640226) to Shell Creek (640342) 345kV line circuit 1.				X	X	
79	FLT79-SB	**Hoskins 345kV Stuck Breaker Scenario 2** a. Apply single phase fault at the Hoskins (640226) 345kV bus. b. Wait 13.5 cycles and remove fault. c. Trip Hoskins (640226) 345/(640228) 115/(640231) 13.8kV transformer circuit 1. d. Trip Hoskins (640226) to Raun (635200) 345kV line circuit 1.				X	X	
80	FLT80-SB	**Hoskins 345kV Stuck Breaker Scenario 3** a. Apply single phase fault at the Hoskins (640226) 345kV bus. b. Wait 13.5 cycles and remove fault. c. Trip Hoskins (640226) 345/(640227) 230/(643082) 13.8kV transformer circuit 1. d. Trip Hoskins (640226) to Raun (635200) 345kV line circuit 1.				X		
81	FLT81-SB 2025SP Only	**Hoskins 345kV Stuck Breaker Scenario 4** a. Apply single phase fault at the Hoskins (640226) 345kV bus. b. Wait 13.5 cycles and remove fault. c. Trip Hoskins (640226) 345/(640228) 115/(640231) 13.8kV transformer circuit 1. d. Trip Hoskins (640226) to Neligh East (640520) 345kV line circuit 1.				X		
82	FLT82-3PH	3 phase fault on the Columbus East (640125) 345/(640127) 115/(640129) 13.8kV transformer circuit 1, near Columbus East 345kV. a. Apply fault at the Columbus East 345kV bus. b. Clear fault after 4.5 cycles and trip the faulted line.				X		
83	FLT83-3PH	3 phase fault on the Antelope (640521) to Creighton (640149) 115kV line circuit 1, near Antelope 115kV. a. Apply fault at the Antelope 345kV bus. b. Clear fault after 6.5 cycles and trip the faulted line.					X	
84	FLT84-3PH	3 phase fault on the Antelope (640521) to County Line (640115) 115kV line circuit 1, near Antelope 115kV. a. Apply fault at the Antelope 345kV bus. b. Clear fault after 6.5 cycles and trip the faulted line.					X	

Cont. No.	Cont. Name	Description	GEN-2014-023	GEN-2014-059	GEN-2014-060	GEN-2015-007	GEN-2015-008	GEN-2015-023
85	FLT85-3PH	3 phase fault on the Antelope (640521) to Neligh (640293) 115kV line circuit 1, near Antelope 115kV. a. Apply fault at the Antelope 345kV bus. b. Clear fault after 6.5 cycles and trip the faulted line.					X	
86	FLT86-PO	**Antelope 115kV Prior Outage Scenario 1** a. Prior Outage: Switch out Antelope (640521) 115 to Neligh (640293) 115kV line circuit 1, near Antelope 115kV and solve. b. Apply 3 phase fault Antelope (640521) to Neligh (640293) 115kV line circuit 2, near Hoskins 115kV. c. Clear fault after 6.5 cycles and trip the faulted line and remove fault.					X	
87	FLT87-PO	**ONLY for 6/1/2016 and BEYOND** **Antelope 115kV Prior Outage Scenario 2** a. Prior Outage: Switch out Antelope (640521) 115/(640520) 230/(640524) 13.8kV transformer circuit 1, near Antelope 115kV and solve. b. Apply 3 phase fault Antelope (640521) to County Line (640115) 115kV line circuit 1, near Antelope 115kV. c. Clear fault after 6.5 cycles and trip the faulted line and remove fault.					X	
88	FLT88-PO	**ONLY for 6/1/2016 and BEYOND** **Antelope 115kV Prior Outage Scenario 3** a. Prior Outage: Switch out Antelope (640521) 115/(640520) 230/(640524) 13.8kV transformer circuit 1, near Antelope 115kV and solve. b. Apply 3 phase fault Antelope (640521) to Creighton (640149) 115kV line circuit 1, near Antelope 115kV. c. Clear fault after 6.5 cycles and trip the faulted line and remove fault.					X	
89	FLT89-PO	**ONLY for 6/1/2016 and BEYOND** **Antelope 115kV Prior Outage Scenario 4** a. Prior Outage: Switch out Antelope (640521) 115/(640520) 230/(640524) 13.8kV transformer circuit 1, near Antelope 115kV and solve. b. Apply 3 phase fault Antelope (640521) to Neligh (640293) 115kV line circuit 1, near Antelope 115kV. c. Clear fault after 6.5 cycles and trip the faulted line and remove fault.					X	
90	FLT90-3PH	3 phase fault on the Leland Olds (659105) to Groton (659160) 345kV line circuit 1, near Leland Olds 345kV. a. Apply fault at the Leland Olds 345kV bus. b. Clear fault after 5 cycles and trip the faulted line.						X
91	FLT91-3PH	3 phase fault on the Leland Olds (659105) 345/(659106) 230/(659201) 13.8kV transformer circuit 1, near Leland Olds 345kV. a. Apply fault at the Leland Olds 345kV bus. b. Clear fault after 5 cycles and trip the faulted line.						X

Cont. No.	Cont. Name	Description	GEN-2014-023	GEN-2014-059	GEN-2014-060	GEN-2015-007	GEN-2015-008	GEN-2015-023
92	FLT92-3PH 2025SP Only	**ONLY for 6/1/2016 and BEYOND** 3 phase fault on the Holt Co (640510) to Cherry Co (640500) 345kV line circuit 1, near Holt Co 345kV. a. Apply fault at the Holt Co 345kV bus. b. Clear fault after 5 cycles and trip the faulted line.						**X**
93	FLT93-3PH	3 phase fault on the Grand Island (652571) to Sweetwater (640374) 345kV line circuit 1, near Grand Island 345kV. a. Apply fault at the Grand Island 345kV bus. b. Clear fault after 5 cycles and trip the faulted line.						**X**
94	FLT94-3PH	3 phase fault on the Gentleman (640183) to Red Willow (640325) 345kV line circuit 1, near Gentleman 345kV. a. Apply fault at the Gentleman 345kV bus. b. Clear fault after 5 cycles and trip the faulted line.						**X**
95	FLT95-3PH	3 phase fault on the Sweetwater (640374) to Axtell (640065) 345kV line circuit 1, near Sweetwater 345kV. a. Apply fault at the Sweetwater 345kV bus. b. Clear fault after 5 cycles and trip the faulted line.						**X**
96	FLT96-3PH	3 phase fault on the Grand Island (652571) 345/(640200) 230/(643071) 13.8kV transformer circuit 3, near Grand Island 345kV. a. Apply fault at the Grand Island 345kV bus. b. Clear fault after 4.5 cycles and trip the faulted line.						**X**
97	FLT97-PO	**Gentleman 345kV Prior Outage Scenario 1** a. Prior Outage: Switch out Gentleman (640183) to Red Willow (640325) 345kV line circuit 1, near Gentleman 345kV and solve. b. Apply 3 phase fault Ft. Thompson (652506) to Grand Prairie (652532) 345kV line circuit 1, near Ft. Thompson 345kV. c. Clear fault after 5 cycles and trip the faulted line and remove fault.						**X**
98	FLT98-PO	**Grand Island 345kV Prior Outage Scenario 1** a. Prior Outage: Switch out Grand Island (652571) to Holt County (640510) 345kV line circuit 1, near Grand Island 345kV and solve. b. Apply 3 phase fault Leland Olds (659105) to Groton (659160) 345kV line circuit 1, near Leland Olds 345kV. c. Clear fault after 5 cycles and trip the faulted line and remove fault.						**X**
99	FLT99-PO	**Ft Thompson 230kV Prior Outage Scenario 1** a. Prior Outage: Switch out Ft Thompson (652507) to Wessington (652607) 230kV line circuit 1, near Ft Thompson 230kV and solve. b. Apply 3 phase fault Ft Thompson (652507) to Letcher (652606) 230kV line circuit 1, near Ft Thompson 230kV. c. Clear fault after 6 cycles and trip the faulted line and remove fault.						**X**

Cont. No.	Cont. Name	Description	GEN-2014-023	GEN-2014-059	GEN-2014-060	GEN-2015-007	GEN-2015-008	GEN-2015-023
100	FLT100-SB	**Grand Island 345kV Stuck Breaker Scenario 1** a. Apply single phase fault at the Grand Island (652571) 345kV bus. b. Wait 13.5 cycles and remove fault. c. Trip Grand Island (652571) 345/(640200) 230/(652316) 13.8kV transformer circuit 2. d. Trip Grand Island (652571) to Sweetwater (640374) 345kV line circuit 1.						**X**
101	FLT101-SB	**Grand Island 345kV Stuck Breaker Scenario 2** a. Apply single phase fault at the Grand Island (652571) 345kV bus. b. Wait 13.5 cycles and remove fault. c. Trip Grand Island (652571) 345/(640200) 230/(652314) 13.8kV transformer circuit 1. d. Trip Grand Island (652571) to McCool (640271) 345kV line circuit 1.						**X**
102	FLT102-SB	**Grand Island 345kV Stuck Breaker Scenario 3** a. Apply single phase fault at the Grand Island (652571) 345kV bus. b. Wait 13.5 cycles and remove fault. c. Trip Grand Island (652571) 345/(640200) 230/(652314) 13.8kV transformer circuit 1. d. Trip Grand Island (652571) 345/(640200) 230/(643071) 13.8kV transformer circuit 3.						**X**
103	FLT103-SB Summer 2025SP Only	**Hoskins 345kV Stuck Breaker Scenario 5** a. Apply single phase fault at the Hoskins (640226) 345kV bus. b. Wait 13.5 cycles and remove fault. c. Trip Hoskins Hoskins (640226) to Shell Creek (640342) 345kV line circuit 1. d. Trip Hoskins (640226) to Neligh East (640520) 345kV line circuit 1.					**X**	

The Southwest Power Pool Disturbance Performance Criteria Requirements provides a basis for evaluating the system response during the initial transient period following a disturbance on the Bulk Electric System by establishing minimum requirements for machine rotor angle damping and transient voltage recovery.

a. Angular Oscillations
    i. For study projects that are synchronous machines, verify that rotor angle oscillations meet the damping requirements described in Appendix.
    ii. For other synchronous machines that are not study projects, but based on engineering judgment have questionable rotor angle oscillation damping, verify that they meet the requirements described in Appendix.
b. Transient Voltage Recovery
    i. For the transient voltage recovery requirement in Appendix, the bus voltages to be included are those at the point of interconnection for each study generator. Other voltages (115kV and higher) in the area should be checked for this requirement if the terminal voltage of other machines in the monitored area appears to have voltage recovery issues.

Southwest Power Pool
Disturbance Performance Requirements

OVERVIEW

These Disturbance Performance Requirements ("Requirements") shall be applicable to the Bulk Electric System within the Southwest Power Pool Planning Area. Utilization of these Requirements applies to all registered entities within the Southwest Power Pool Planning Area. These Requirements shall not be applicable to facilities that are not part of Bulk Electric System. More stringent Requirements are at the sole discretion of each Transmission Owner.

Transient and dynamic stability assessments are generally performed to assure adequate avoidance of loss of generator synchronism and prevention of system voltage collapse within the first 20 seconds after a system disturbance. These Requirements provide a basis for evaluating the system response during the initial transient period following a disturbance on the Bulk Electric System by establishing minimum requirements for machine rotor angle damping and transient voltage recovery.

ROTOR ANGLE DAMPING REQUIREMENT

Machine Rotor Angles shall exhibit well damped angular oscillations [as defined below] and acceptable power swings following a disturbance on the Bulk Electric System for all NERC Category A, B and C events.

Well damped angular oscillations shall meet one of the following two requirements when calculated directly from the rotor angle:

1. Successive Positive Peak Ratio (SPPR) must be less than or equal to 0.95 where SPPR is calculated as follows:

$$\text{SPPR} = \frac{\text{Peak Rotor Angle of 2}^{\text{nd}}\text{ Positive Swing Peak}}{\text{Peak Rotor Angle of 1}^{\text{st}}\text{ Positive Swing Peak}} \leq 0.95$$

-or- Damping Factor % = (1 – SPPR) x 100% $\geq$ 5%

The machine rotor angle damping ratio may be determined by appropriate modal analysis (i.e. Prony Analysis) where the following equivalent requirement must be met:

Damping Ratio $\geq$ 0.0081633

2. Successive Positive Peak Ratio Five (SPPR5) must be less than or equal to 0.774 where SPPR5 is calculated as follows:

$$\text{SPPR5} = \frac{\text{Peak Rotor Angle of 5}^{\text{th}}\text{ Positive Swing Peak}}{\text{Peak Rotor Angle of 1}^{\text{st}}\text{ Positive Swing Peak}} \leq 0.774$$

-or- Damping Factor % = (1 – SPPR5) x 100% $\geq$ 22.6%

The machine rotor angle damping ratio may be determined by appropriate modal analysis (i.e. Prony Analysis) where the following equivalent requirement must be met:

Damping Ratio $\geq$ 0.0081633

Qualitatively, these Requirements are shown in Figure 1 below.

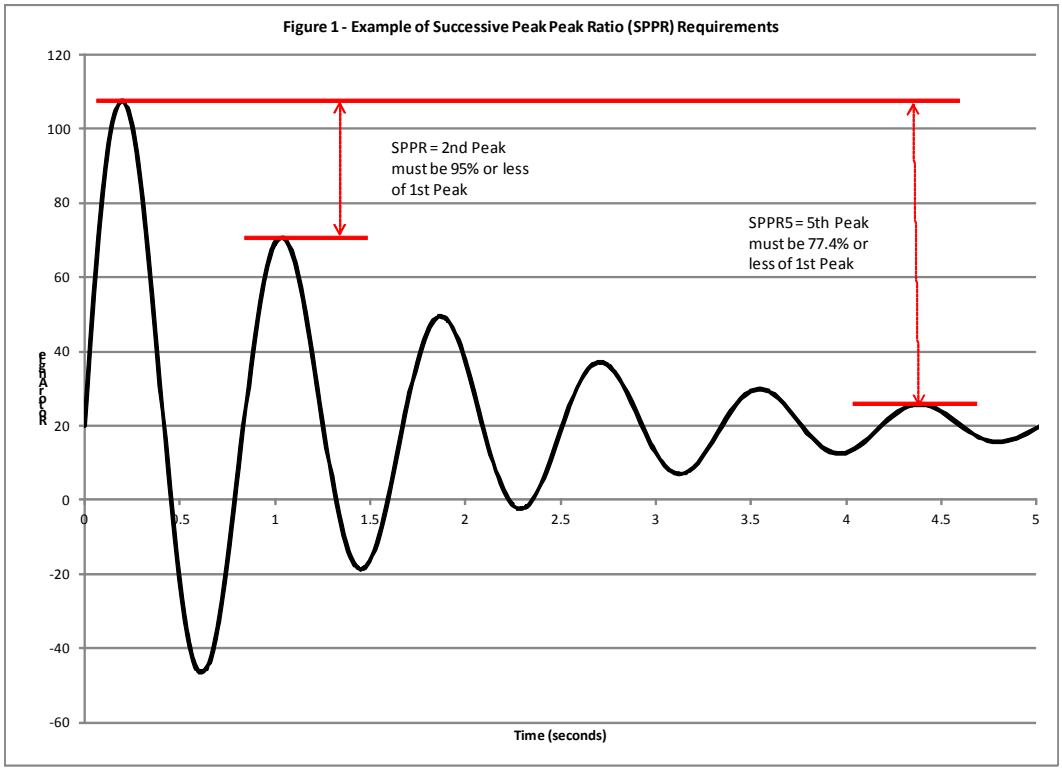

TRANSIENT VOLTAGE RECOVERY REQUIREMENT

Any time after a disturbance is cleared; bus voltages on the Bulk Electric System shall not swing outside of the bandwidth of 0.70 per unit to 1.20 per unit.

Qualitatively, this Requirement is shown in Figure 2 below.

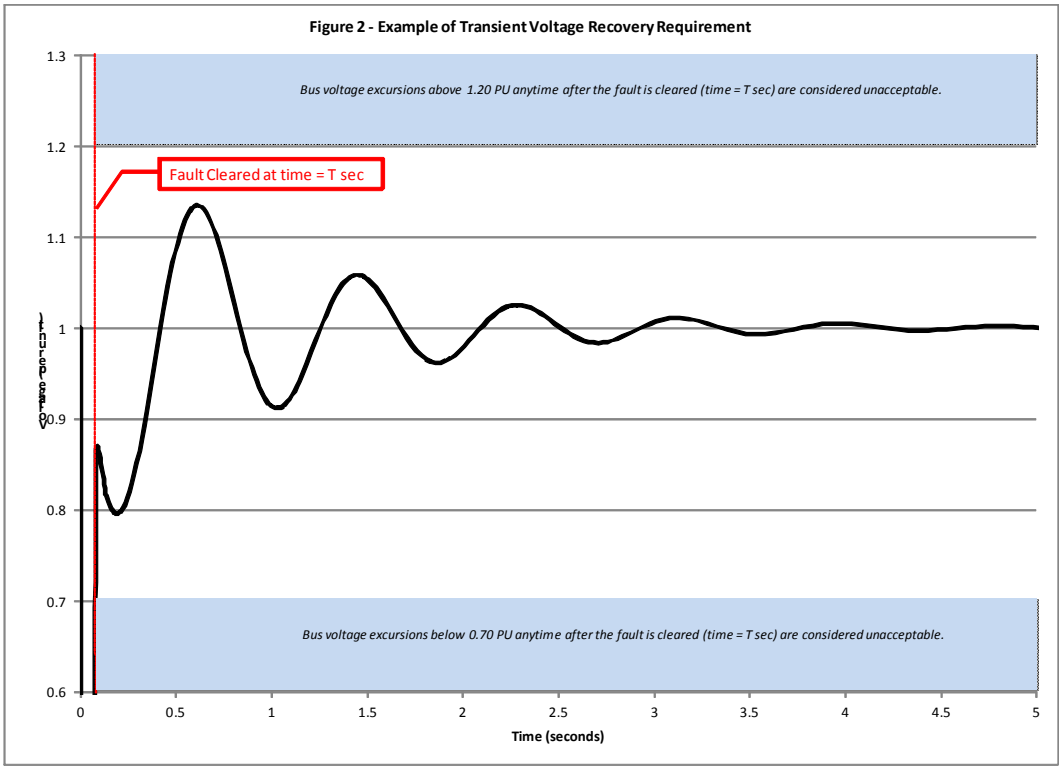
Figure 2 - Example of Transient Voltage Recovery Requirement
Bus voltage excursions above 1.20 PU anytime after the fault is cleared (time = T sec) are considered unacceptable.
Fault Cleared at time = T sec
Bus voltage excursions below 0.70 PU anytime after the fault is cleared (time = T sec) are considered unacceptable.
1.3
1.2
1.1
1
0.9
0.8
0.7
0.6
0
0.5
1
1.5
2
2.5
3
3.5
4
4.5
5
Time (seconds)

	2015 Summer Peak					2015 Winter Peak					2025 Summer Peak				
Cont. No.	P(MW)	Q(MVAR)	Power Factor		V(PU)	P(MW)	Q(MVAR)	Power Factor		V(PU)	P(MW)	Q(MVAR)	Power Factor		V(PU)
0	79.9	-12.1	.989	leading	1.0241	79.9	-11	.991	leading	1.0214	79.9	-13.3	.986	leading	1.0276
1	79.9	35.7	.913	lagging	1.0241	79.9	36.1	.911	lagging	1.0214	79.9	35.6	.913	lagging	1.0276
2	79.9	-46.9	.862	leading	1.0241	79.9	-44.3	.875	leading	1.0214	79.9	-46.2	.866	leading	1.0276
3	79.9	69.3	.755	lagging	1.0241	79.9	68.8	.758	lagging	1.0214	79.9	72.9	.739	lagging	1.0276
4	79.9	0.6	1.000	lagging	1.0241	79.9	2.3	1.000	lagging	1.0214	79.9	0.2	1.000	lagging	1.0276
5	79.9	-13.7	.986	leading	1.0241	79.9	-11.1	.990	leading	1.0214	79.9	-16	.981	leading	1.0276
6	79.9	-14.1	.985	leading	1.0241	79.9	-12.6	.988	leading	1.0214	79.9	-14.5	.984	leading	1.0276
7	79.9	-11.2	.990	leading	1.0241	79.9	-11.1	.990	leading	1.0214	79.9	-11.9	.989	leading	1.0276
8	79.9	-11.3	.990	leading	1.0241	79.9	-10.1	.992	leading	1.0214	79.9	-12.4	.988	leading	1.0276
9	79.9	-9.1	.994	leading	1.0241	79.9	-9.4	.993	leading	1.0214	79.9	-9.5	.993	leading	1.0276
10	79.9	-12.1	.989	leading	1.0241	79.9	-10.5	.991	leading	1.0214	79.9	-13.1	.987	leading	1.0276
11											79.9	-10.2	.992	leading	1.0276
12	79.9	-4.5	.998	leading	1.0241	79.9	-3.3	.999	leading	1.0214	79.9	-6.9	.996	leading	1.0276
13	79.9	19.8	.971	lagging	1.0241	79.9	6.6	.997	lagging	1.0214	79.9	-0.6	1.000	leading	1.0276
14	79.9	-16	.981	leading	1.0241	79.9	-12.5	.988	leading	1.0214	79.9	-14.4	.984	leading	1.0276
15	79.9	-12.4	.988	leading	1.0241	79.9	-10.3	.992	leading	1.0214	79.9	-13.1	.987	leading	1.0276
16	79.9	-10.9	.991	leading	1.0241	79.9	-12.9	.987	leading	1.0214	79.9	-9.4	.993	leading	1.0276
17	79.9	-10.9	.991	leading	1.0241	79.9	-12.9	.987	leading	1.0214	79.9	-11.1	.990	leading	1.0276
20	79.9	-10.9	.991	leading	1.0241	79.9	-12.9	.987	leading	1.0214	79.9	1.1	1.000	lagging	1.0276
21	79.9	69.7	.754	lagging	1.0241	79.9	70	.752	lagging	1.0214	79.9	73	.738	lagging	1.0276
22	79.9	-10.9	.991	leading	1.0241	79.9	-12.9	.987	leading	1.0214	79.9	-9.4	.993	leading	1.0276
24	79.9	-13.7	.986	leading	1.0241	79.9	-14	.985	leading	1.0214	79.9	-13	.987	leading	1.0276
25	79.9	-0.9	1.000	leading	1.0241	79.9	1.8	1.000	lagging	1.0214	79.9	-0.5	1.000	leading	1.0276
26	79.9	-12.5	.988	leading	1.0241	79.9	-12.6	.988	leading	1.0214	79.9	-11.1	.990	leading	1.0276
27	79.9	-12.6	.988	leading	1.0241	79.9	-11.2	.990	leading	1.0214	79.9	-13.5	.986	leading	1.0276
28	79.9	-8.4	.995	leading	1.0241	79.9	-7.6	.996	leading	1.0214	79.9	-9	.994	leading	1.0276
29	79.9	-8.8	.994	leading	1.0241	79.9	-9.2	.993	leading	1.0214	79.9	-8.9	.994	leading	1.0276
30	79.9	-8.6	.994	leading	1.0241	79.9	-8.7	.994	leading	1.0214	79.9	-7.8	.995	leading	1.0276
31	79.9	-11.6	.990	leading	1.0241	79.9	-10.9	.991	leading	1.0214	79.9	-12.8	.987	leading	1.0276
33	79.9	-11.9	.989	leading	1.0241	79.9	-11	.991	leading	1.0214	79.9	-13.2	.987	leading	1.0276
35	79.9	-12.1	.989	leading	1.0241	79.9	-11	.991	leading	1.0214	79.9	-13.2	.987	leading	1.0276
36	79.9	-12.1	.989	leading	1.0241	79.9	-11	.991	leading	1.0214	79.9	-13.3	.986	leading	1.0276
38	79.9	-10.3	.992	leading	1.0241	79.9	-10.7	.991	leading	1.0214	79.9	-12.1	.989	leading	1.0276
40	79.9	-11.1	.990	leading	1.0241	79.9	-10.8	.991	leading	1.0214	79.9	-12.9	.987	leading	1.0276
42	79.9	-12.1	.989	leading	1.0241	79.9	-11	.991	leading	1.0214	79.9	-13.3	.986	leading	1.0276
44	79.9	-12.1	.989	leading	1.0241	79.9	-11	.991	leading	1.0214	79.9	-13.3	.986	leading	1.0276
45	79.9	-10	.992	leading	1.0241	79.9	-10.6	.991	leading	1.0214	79.9	-11.9	.989	leading	1.0276
46	79.9	-10	.992	leading	1.0241	79.9	-10.6	.991	leading	1.0214	79.9	-11.9	.989	leading	1.0276
47	79.9	-7.6	.996	leading	1.0241	79.9	-9	.994	leading	1.0214	79.9	-8.7	.994	leading	1.0276
48	79.9	-12.1	.989	leading	1.0241	79.9	-11	.991	leading	1.0214	79.9	-13.1	.987	leading	1.0276
50	79.9	-12	.989	leading	1.0241	79.9	-10.9	.991	leading	1.0214	79.9	-13.4	.986	leading	1.0276
52	79.9	-11.3	.990	leading	1.0241	79.9	-10	.992	leading	1.0214	79.9	-12.6	.988	leading	1.0276
53	79.9	-12.1	.989	leading	1.0241	79.9	-10.9	.991	leading	1.0214	79.9	-13.4	.986	leading	1.0276
54	79.9	-11.6	.990	leading	1.0241	79.9	-10.6	.991	leading	1.0214	79.9	-12.9	.987	leading	1.0276
55	79.9	-12.1	.989	leading	1.0241	79.9	-11	.991	leading	1.0214	79.9	-13.4	.986	leading	1.0276
56	79.9	-9.9	.992	leading	1.0241	79.9	-7.9	.995	leading	1.0214	79.9	-11.4	.990	leading	1.0276
57	79.9	-9.9	.992	leading	1.0241	79.9	-7.9	.995	leading	1.0214	79.9	-11.4	.990	leading	1.0276
58	79.9	-11.9	.989	leading	1.0241	79.9	-10.8	.991	leading	1.0214	79.9	-13.1	.987	leading	1.0276
59	79.9	-9.1	.994	leading	1.0241	79.9	-7.2	.996	leading	1.0214	79.9	-10.4	.992	leading	1.0276
60	79.9	-12.1	.989	leading	1.0241	79.9	-11	.991	leading	1.0214	79.9	-13.3	.986	leading	1.0276
61	79.9	-11.8	.989	leading	1.0241	79.9	-10.8	.991	leading	1.0214	79.9	-13	.987	leading	1.0276
62	79.9	-11.8	.989	leading	1.0241	79.9	-10.8	.991	leading	1.0214	79.9	-12.8	.987	leading	1.0276
63	79.9	-12.2	.989	leading	1.0241	79.9	-10.9	.991	leading	1.0214	79.9	-13	.987	leading	1.0276
64	79.9	-10.3	.992	leading	1.0241	79.9	-9.4	.993	leading	1.0214	79.9	-9.2	.993	leading	1.0276
65	79.9	-10.1	.992	leading	1.0241	79.9	-8.9	.994	leading	1.0214	79.9	-9.3	.993	leading	1.0276
66	79.9	-12.7	.988	leading	1.0241	79.9	-11.2	.990	leading	1.0214					
67											79.9	-14.2	.985	leading	1.0276
68	79.9	-12.8	.987	leading	1.0241	79.9	-11.6	.990	leading	1.0214	79.9	-14	.985	leading	1.0276
69	79.9	-8.4	.995	leading	1.0241	79.9	-8.1	.995	leading	1.0214	79.9	-9.2	.993	leading	1.0276
70	79.9	-11.7	.989	leading	1.0241	79.9	-10.9	.991	leading	1.0214	79.9	-13	.987	leading	1.0276
71	79.9	-9.2	.993	leading	1.0241	79.9	-7.8	.995	leading	1.0214	79.9	-8.2	.995	leading	1.0276
72	79.9	-11.2	.990	leading	1.0241	79.9	-10.4	.992	leading	1.0214	79.9	-11.8	.989	leading	1.0276
73	79.9	-11.9	.989	leading	1.0241	79.9	-10.7	.991	leading	1.0214	79.9	-13.3	.986	leading	1.0276
74	79.9	-12	.989	leading	1.0241	79.9	-10.8	.991	leading	1.0214	79.9	-13.1	.987	leading	1.0276
75	79.9	-11.9	.989	leading	1.0241	79.9	-10.9	.991	leading	1.0214	79.9	-13.2	.987	leading	1.0276
76	79.9	-11.5	.990	leading	1.0241	79.9	-10.9	.991	leading	1.0214	79.9	-12.6	.988	leading	1.0276
77	79.9	-12	.989	leading	1.0241	79.9	-10.8	.991	leading	1.0214	79.9	-13.2	.987	leading	1.0276
82	79.9	-9.3	.993	leading	1.0241	79.9	-7.8	.995	leading	1.0214	79.9	-10.1	.992	leading	1.0276
83	79.9	-12.2	.989	leading	1.0241	79.9	-11.1	.990	leading	1.0214	79.9	-12.9	.987	leading	1.0276
84	79.9	-6.4	.997	leading	1.0241	79.9	-5.9	.997	leading	1.0214	79.9	-13	.987	leading	1.0276
85	79.9	-12.3	.988	leading	1.0241	79.9	-11.1	.990	leading	1.0214	79.9	-13.7	.986	leading	1.0276
86	79.9	-12.9	.987	leading	1.0241	79.9	-12.1	.989	leading	1.0214	79.9	-14.4	.984	leading	1.0276
87											79.9	-4.6	.998	leading	1.0276
88											79.9	-9.7	.993	leading	1.0276

89											79.9	-10.6	.991	leading	1.0276
90	79.9	-10.5	.991	leading	1.0241	79.9	-10.1	.992	leading	1.0214	79.9	-11.9	.989	leading	1.0276
91	79.9	-12.1	.989	leading	1.0241	79.9	-11	.991	leading	1.0214	79.9	-13.2	.987	leading	1.0276
92											79.9	-13.2	.987	leading	1.0276
93	79.9	-11.1	.990	leading	1.0241	79.9	-10.7	.991	leading	1.0214	79.9	-12.1	.989	leading	1.0276
94	79.9	-9.6	.993	leading	1.0241	79.9	-9.1	.994	leading	1.0214	79.9	-10.8	.991	leading	1.0276
95	79.9	-8.8	.994	leading	1.0241	79.9	-8.4	.995	leading	1.0214	79.9	-10.3	.992	leading	1.0276
96	79.9	-11.8	.989	leading	1.0241	79.9	-10.9	.991	leading	1.0214	79.9	-13.1	.987	leading	1.0276
97	79.9	-13.6	.986	leading	1.0241	79.9	-9.6	.993	leading	1.0214	79.9	-12.1	.989	leading	1.0276
98	79.9	23.2	.960	lagging	1.0241	79.9	8.5	.994	lagging	1.0214	79.9	0.6	1.000	lagging	1.0276
99	79.9	-0.9	1.000	leading	1.0241	79.9	-3	.999	leading	1.0214	79.9	-1.4	1.000	leading	1.0276

POI-560718

	2015 Summer Peak					2015 Winter Peak					2025 Summer Peak				
Cont. No.	P(MW)	Q(MVAR)	Power Factor		V(PU)	P(MW)	Q(MVAR)	Power Factor		V(PU)	P(MW)	Q(MVAR)	Power Factor		V(PU)
0	160	-27.8	.985	leading	1	160	-26.9	.986	leading	1.0137	160	-27.5	.986	leading	1.0073
1	160	-28	.985	leading	1	160	-27.1	.986	leading	1.0137	160	-27.7	.985	leading	1.0073
2	160	-27.5	.986	leading	1	160	-26.7	.986	leading	1.0137	160	-27.3	.986	leading	1.0073
3	160	-25.9	.987	leading	1	160	-25.4	.988	leading	1.0137	160	-26.1	.987	leading	1.0073
4	160	-27.4	.986	leading	1	160	-26.4	.987	leading	1.0137	160	-27.2	.986	leading	1.0073
5	160	-27.6	.985	leading	1	160	-27	.986	leading	1.0137	160	-27.2	.986	leading	1.0073
6	160	-27.8	.985	leading	1	160	-26.9	.986	leading	1.0137	160	-27.5	.986	leading	1.0073
7	160	-27.7	.985	leading	1	160	-26.9	.986	leading	1.0137	160	-27.4	.986	leading	1.0073
8	160	-27.6	.985	leading	1	160	-26.8	.986	leading	1.0137	160	-27.3	.986	leading	1.0073
9	160	-27.5	.986	leading	1	160	-26.9	.986	leading	1.0137	160	-27.2	.986	leading	1.0073
10	160	-27.8	.985	leading	1	160	-26.9	.986	leading	1.0137	160	-27.5	.986	leading	1.0073
11											160	-27.2	.986	leading	1.0073
12	160	-25.5	.988	leading	1	160	-24.7	.988	leading	1.0137	160	-25.2	.988	leading	1.0073
13	160	-21.4	.991	leading	1	160	-22.7	.990	leading	1.0137	160	-17.8	.994	leading	1.0073
14	160	-28.1	.985	leading	1	160	-26.6	.986	leading	1.0137	160	-27.2	.986	leading	1.0073
15	160	-27.8	.985	leading	1	160	-26.8	.986	leading	1.0137	160	-27.5	.986	leading	1.0073
16	160	-27.1	.986	leading	1	160	-26.2	.987	leading	1.0137	160	-26.9	.986	leading	1.0073
17	160	-27.1	.986	leading	1	160	-26.2	.987	leading	1.0137	160	-27	.986	leading	1.0073
20	160	-27.1	.986	leading	1	160	-26.2	.987	leading	1.0137	160	-25.8	.987	leading	1.0073
21	160	-24.6	.988	leading	1	160	-24.4	.989	leading	1.0137	160	-24.9	.988	leading	1.0073
22	160	-27.1	.986	leading	1	160	-26.2	.987	leading	1.0137	160	-26.9	.986	leading	1.0073
24	160	-27.7	.985	leading	1	160	-26.9	.986	leading	1.0137	160	-27.4	.986	leading	1.0073
25	160	-27.3	.986	leading	1	160	-26.4	.987	leading	1.0137	160	-27.1	.986	leading	1.0073
26	160	-27.1	.986	leading	1	160	-26.2	.987	leading	1.0137	160	-27	.986	leading	1.0073
27	160	-26.9	.986	leading	1	160	-26.6	.986	leading	1.0137	160	-27.1	.986	leading	1.0073
28	160	-28.1	.985	leading	1	160	-27.1	.986	leading	1.0137	160	-27.8	.985	leading	1.0073
29	160	-27.5	.986	leading	1	160	-26.9	.986	leading	1.0137	160	-27.2	.986	leading	1.0073
30	160	-27.5	.986	leading	1	160	-26.9	.986	leading	1.0137	160	-27.2	.986	leading	1.0073
31	160	-0.4	1.000	leading	1	160	-0.7	1.000	leading	1.0137	160	-12.5	.997	leading	1.0073
33	160	-29.6	.983	leading	1	160	-24.6	.988	leading	1.0137	160	-14	.996	leading	1.0073
35	160	-42.6	.966	leading	1	160	-31.6	.981	leading	1.0137	160	-44.8	.963	leading	1.0073
36	160	6.7	.999	lagging	1	160	-9.4	.998	leading	1.0137	160	-1.5	1.000	leading	1.0073
38	160	64	.928	lagging	1	160	50.8	.953	lagging	1.0137	160	41	.969	lagging	1.0073
40	160	-0.5	1.000	leading	1	160	-0.8	1.000	leading	1.0137	160	-20.8	.992	leading	1.0073
42	160	-26.1	.987	leading	1	160	-25.4	.988	leading	1.0137	160	-25.9	.987	leading	1.0073
44	160	-20.7	.992	leading	1	160	-23	.990	leading	1.0137	160	-20.7	.992	leading	1.0073
45	160	99.8	.848	lagging	1	160	74.5	.907	lagging	1.0137	160	68.5	.919	lagging	1.0073
46	160	36.2	.975	lagging	1	160	39.9	.970	lagging	1.0137	160	10.9	.998	lagging	1.0073
47	160	-9.1	.998	leading	1	160	-7.6	.999	leading	1.0137	160	-16.1	.995	leading	1.0073
48	160	-27.4	.986	leading	1	160	-26.9	.986	leading	1.0137	160	-26.2	.987	leading	1.0073
50	160	-27.5	.986	leading	1	160	-26.2	.987	leading	1.0137	160	-27.6	.985	leading	1.0073
52	160	-27.4	.986	leading	1	160	-26.8	.986	leading	1.0137	160	-27.3	.986	leading	1.0073
53	160	-28.1	.985	leading	1	160	-26.4	.987	leading	1.0137	160	-28.3	.985	leading	1.0073
54	160	-28.1	.985	leading	1	160	-27.4	.986	leading	1.0137	160	-27.8	.985	leading	1.0073
55	160	-27.8	.985	leading	1	160	-26.9	.986	leading	1.0137	160	-27.5	.986	leading	1.0073
56	160	-27.3	.986	leading	1	160	-26	.987	leading	1.0137	160	-27.1	.986	leading	1.0073
57	160	-27.3	.986	leading	1	160	-26	.987	leading	1.0137	160	-27.1	.986	leading	1.0073
58	160	-27.6	.985	leading	1	160	-26.7	.986	leading	1.0137	160	-27.3	.986	leading	1.0073
59	160	-27.3	.986	leading	1	160	-25.4	.988	leading	1.0137	160	-26.7	.986	leading	1.0073
60	160	-27.8	.985	leading	1	160	-26.8	.986	leading	1.0137	160	-27.5	.986	leading	1.0073
61	160	-27.6	.985	leading	1	160	-26.7	.986	leading	1.0137	160	-27.4	.986	leading	1.0073
62	160	-27.8	.985	leading	1	160	-26.9	.986	leading	1.0137	160	-27.5	.986	leading	1.0073
63	160	-27.8	.985	leading	1	160	-26.9	.986	leading	1.0137	160	-27.5	.986	leading	1.0073
64	160	-27.8	.985	leading	1	160	-26.9	.986	leading	1.0137	160	-27.5	.986	leading	1.0073
65	160	-27.8	.985	leading	1	160	-26.9	.986	leading	1.0137	160	-27.5	.986	leading	1.0073
66	160	-28	.985	leading	1	160	-27.1	.986	leading	1.0137					
67											160	-27.7	.985	leading	1.0073
68	160	-27.2	.986	leading	1	160	-26.5	.987	leading	1.0137	160	-27.3	.986	leading	1.0073
69	160	-27.7	.985	leading	1	160	-26.9	.986	leading	1.0137	160	-27.7	.985	leading	1.0073
70	160	-27.7	.985	leading	1	160	-26.8	.986	leading	1.0137	160	-27.4	.986	leading	1.0073
71	160	-27.7	.985	leading	1	160	-26.7	.986	leading	1.0137	160	-27.4	.986	leading	1.0073
72	160	-28	.985	leading	1	160	-27.1	.986	leading	1.0137	160	-27.7	.985	leading	1.0073
73	160	-27.8	.985	leading	1	160	-26.8	.986	leading	1.0137	160	-27.5	.986	leading	1.0073
74	160	-27.8	.985	leading	1	160	-26.8	.986	leading	1.0137	160	-27.5	.986	leading	1.0073
75	160	-27.8	.985	leading	1	160	-26.8	.986	leading	1.0137	160	-27.5	.986	leading	1.0073
76	160	-27.8	.985	leading	1	160	-26.9	.986	leading	1.0137	160	-27.5	.986	leading	1.0073
77	160	-27.8	.985	leading	1	160	-26.8	.986	leading	1.0137	160	-27.5	.986	leading	1.0073
82	160	-27.7	.985	leading	1	160	-26.8	.986	leading	1.0137	160	-27.4	.986	leading	1.0073
83	160	-27.8	.985	leading	1	160	-26.8	.986	leading	1.0137	160	-27.5	.986	leading	1.0073
84	160	-27.1	.986	leading	1	160	-25.9	.987	leading	1.0137	160	-27.4	.986	leading	1.0073
85	160	-27.8	.985	leading	1	160	-26.9	.986	leading	1.0137	160	-27.5	.986	leading	1.0073
86	160	-28.2	.985	leading	1	160	-27.5	.986	leading	1.0137	160	-27.7	.985	leading	1.0073
87											160	-26.8	.986	leading	1.0073
88											160	-27.2	.986	leading	1.0073

89											160	-27.3	.986	leading	1.0073
90	160	-27.3	.986	leading	1	160	-26.6	.986	leading	1.0137	160	-27.2	.986	leading	1.0073
91	160	-27.8	.985	leading	1	160	-26.9	.986	leading	1.0137	160	-27.5	.986	leading	1.0073
92											160	-27.2	.986	leading	1.0073
93	160	-28.2	.985	leading	1	160	-25.3	.988	leading	1.0137	160	-28.1	.985	leading	1.0073
94	160	-7	.999	leading	1	160	-19.3	.993	leading	1.0137	160	-14.6	.996	leading	1.0073
95	160	-22.2	.991	leading	1	160	-24.1	.989	leading	1.0137	160	-25.1	.988	leading	1.0073
96	160	-27.7	.985	leading	1	160	-26.8	.986	leading	1.0137	160	-27.4	.986	leading	1.0073
97	160	-6.8	.999	leading	1	160	-19.6	.993	leading	1.0137	160	-13.2	.997	leading	1.0073
98	160	-22.7	.990	leading	1	160	-22.3	.990	leading	1.0137	160	-17.1	.994	leading	1.0073
99	160	-25.8	.987	leading	1	160	-25.3	.988	leading	1.0137	160	-25.8	.987	leading	1.0073

POI-560014

	2015 Summer Peak					2015 Winter Peak					2025 Summer Peak				
Cont. No.	P(MW)	Q(MVAR)	Power Factor		V(PU)	P(MW)	Q(MVAR)	Power Factor		V(PU)	P(MW)	Q(MVAR)	Power Factor		V(PU)
0	125.8	-30.8	.971	leading	1.0319	125.8	-32.3	.969	leading	1.0352	125.8	-25	.981	leading	1.0192
1	125.8	-30.6	.972	leading	1.0319	125.8	-32	.969	leading	1.0352	125.8	-24.7	.981	leading	1.0192
2	125.8	-30.5	.972	leading	1.0319	125.8	-31.8	.970	leading	1.0352	125.8	-24.6	.981	leading	1.0192
3	125.8	-30.6	.972	leading	1.0319	125.8	-31.8	.970	leading	1.0352	125.8	-24.8	.981	leading	1.0192
4	125.8	-29.6	.973	leading	1.0319	125.8	-31	.971	leading	1.0352	125.8	-24.1	.982	leading	1.0192
5	125.8	-30.2	.972	leading	1.0319	125.8	-32.1	.969	leading	1.0352	125.8	-24.2	.982	leading	1.0192
6	125.8	-30.7	.971	leading	1.0319	125.8	-32.3	.969	leading	1.0352	125.8	-24.9	.981	leading	1.0192
7	125.8	-30.7	.971	leading	1.0319	125.8	-32.3	.969	leading	1.0352	125.8	-24.9	.981	leading	1.0192
8	125.8	-30.9	.971	leading	1.0319	125.8	-32.6	.968	leading	1.0352	125.8	-25	.981	leading	1.0192
9	125.8	-30.3	.972	leading	1.0319	125.8	-32.1	.969	leading	1.0352	125.8	-24.4	.982	leading	1.0192
10	125.8	-30.8	.971	leading	1.0319	125.8	-32.2	.969	leading	1.0352	125.8	-25	.981	leading	1.0192
11											125.8	-24.6	.981	leading	1.0192
12	125.8	-26.4	.979	leading	1.0319	125.8	-29.3	.974	leading	1.0352	125.8	-22.4	.985	leading	1.0192
13	125.8	-35.8	.962	leading	1.0319	125.8	-36.3	.961	leading	1.0352	125.8	-23.2	.983	leading	1.0192
14	125.8	-29	.974	leading	1.0319	125.8	-28	.976	leading	1.0352	125.8	-23	.984	leading	1.0192
15	125.8	-30.9	.971	leading	1.0319	125.8	-32.2	.969	leading	1.0352	125.8	-25	.981	leading	1.0192
16	125.8	-30	.973	leading	1.0319	125.8	-31.5	.970	leading	1.0352	125.8	-24.4	.982	leading	1.0192
17	125.8	-30	.973	leading	1.0319	125.8	-31.5	.970	leading	1.0352	125.8	-24.5	.982	leading	1.0192
20	125.8	-30	.973	leading	1.0319	125.8	-31.5	.970	leading	1.0352	125.8	-23.3	.983	leading	1.0192
21	125.8	-29.7	.973	leading	1.0319	125.8	-30.8	.971	leading	1.0352	125.8	-24.1	.982	leading	1.0192
22	125.8	-30	.973	leading	1.0319	125.8	-31.5	.970	leading	1.0352	125.8	-24.4	.982	leading	1.0192
24	125.8	-30.5	.972	leading	1.0319	125.8	-32.2	.969	leading	1.0352	125.8	-24.6	.981	leading	1.0192
25	125.8	-29.1	.974	leading	1.0319	125.8	-30.5	.972	leading	1.0352	125.8	-23.7	.983	leading	1.0192
26	125.8	-30.1	.973	leading	1.0319	125.8	-31.4	.970	leading	1.0352	125.8	-24.5	.982	leading	1.0192
27	125.8	-29.7	.973	leading	1.0319	125.8	-32	.969	leading	1.0352	125.8	-24.4	.982	leading	1.0192
28	125.8	-31.1	.971	leading	1.0319	125.8	-32.7	.968	leading	1.0352	125.8	-25.3	.980	leading	1.0192
29	125.8	-30.3	.972	leading	1.0319	125.8	-32.1	.969	leading	1.0352	125.8	-24.4	.982	leading	1.0192
30	125.8	-30.3	.972	leading	1.0319	125.8	-32	.969	leading	1.0352	125.8	-24.3	.982	leading	1.0192
31	125.8	-30.9	.971	leading	1.0319	125.8	-32.5	.968	leading	1.0352	125.8	-24.9	.981	leading	1.0192
33	125.8	-30.8	.971	leading	1.0319	125.8	-32.3	.969	leading	1.0352	125.8	-25.1	.981	leading	1.0192
35	125.8	-30.4	.972	leading	1.0319	125.8	-32.1	.969	leading	1.0352	125.8	-24.5	.982	leading	1.0192
36	125.8	-31.2	.971	leading	1.0319	125.8	-32.5	.968	leading	1.0352	125.8	-25.2	.981	leading	1.0192
38	125.8	-32.3	.969	leading	1.0319	125.8	-33.7	.966	leading	1.0352	125.8	-25.7	.980	leading	1.0192
40	125.8	-31.8	.970	leading	1.0319	125.8	-33.2	.967	leading	1.0352	125.8	-25.5	.980	leading	1.0192
42	125.8	-30.6	.972	leading	1.0319	125.8	-32.3	.969	leading	1.0352	125.8	-24.8	.981	leading	1.0192
44	125.8	-30.8	.971	leading	1.0319	125.8	-32.4	.968	leading	1.0352	125.8	-25	.981	leading	1.0192
45	125.8	-32.6	.968	leading	1.0319	125.8	-34	.965	leading	1.0352	125.8	-25.9	.979	leading	1.0192
46	125.8	-31.7	.970	leading	1.0319	125.8	-33.3	.967	leading	1.0352	125.8	-25.1	.981	leading	1.0192
47	125.8	-24.6	.981	leading	1.0319	125.8	-26.9	.978	leading	1.0352	125.8	-22	.985	leading	1.0192
48	125.8	-31.7	.970	leading	1.0319	125.8	-27.6	.977	leading	1.0352	125.8	-44.1	.944	leading	1.0192
50	125.8	-6.9	.998	leading	1.0319	125.8	-12.1	.995	leading	1.0352	125.8	3.1	1.000	lagging	1.0192
52	125.8	-20.5	.987	leading	1.0319	125.8	-31.3	.970	leading	1.0352	125.8	-7.8	.998	leading	1.0192
53	125.8	-8.5	.998	leading	1.0319	125.8	-32.7	.968	leading	1.0352	125.8	30.7	.971	lagging	1.0192
54	125.8	-20.1	.987	leading	1.0319	125.8	-27.7	.977	leading	1.0352	125.8	-14.6	.993	leading	1.0192
55	125.8	-30.6	.972	leading	1.0319	125.8	-32.2	.969	leading	1.0352	125.8	-24.3	.982	leading	1.0192
56	125.8	-28.2	.976	leading	1.0319	125.8	-31.6	.970	leading	1.0352	125.8	-22.8	.984	leading	1.0192
57	125.8	-28.2	.976	leading	1.0319	125.8	-31.6	.970	leading	1.0352	125.8	-22.8	.984	leading	1.0192
58	125.8	-27.4	.977	leading	1.0319	125.8	-28.4	.975	leading	1.0352	125.8	-23.9	.982	leading	1.0192
59	125.8	-25.4	.980	leading	1.0319	125.8	-28.2	.976	leading	1.0352	125.8	-21.1	.986	leading	1.0192
60	125.8	-31.9	.969	leading	1.0319	125.8	-32	.969	leading	1.0352	125.8	-24.4	.982	leading	1.0192
61	125.8	-29	.974	leading	1.0319	125.8	-30.3	.972	leading	1.0352	125.8	-23.3	.983	leading	1.0192
62	125.8	-30.8	.971	leading	1.0319	125.8	-32.4	.968	leading	1.0352	125.8	-25	.981	leading	1.0192
63	125.8	-30.9	.971	leading	1.0319	125.8	-32.4	.968	leading	1.0352	125.8	-25	.981	leading	1.0192
64	125.8	-30.8	.971	leading	1.0319	125.8	-32.3	.969	leading	1.0352	125.8	-24.9	.981	leading	1.0192
65	125.8	-30.8	.971	leading	1.0319	125.8	-32.3	.969	leading	1.0352	125.8	-24.9	.981	leading	1.0192
66	125.8	-31	.971	leading	1.0319	125.8	-32.7	.968	leading	1.0352					
67											125.8	-25.1	.981	leading	1.0192
68	125.8	-30.1	.973	leading	1.0319	125.8	-31.8	.970	leading	1.0352	125.8	-24.8	.981	leading	1.0192
69	125.8	-30.5	.972	leading	1.0319	125.8	-32.3	.969	leading	1.0352	125.8	-25.1	.981	leading	1.0192
70	125.8	-30.8	.971	leading	1.0319	125.8	-32.3	.969	leading	1.0352	125.8	-25	.981	leading	1.0192
71	125.8	-30.6	.972	leading	1.0319	125.8	-32	.969	leading	1.0352	125.8	-24.7	.981	leading	1.0192
72	125.8	-30.9	.971	leading	1.0319	125.8	-32.4	.968	leading	1.0352	125.8	-25	.981	leading	1.0192
73	125.8	-30.8	.971	leading	1.0319	125.8	-32.2	.969	leading	1.0352	125.8	-25	.981	leading	1.0192
74	125.8	-30.8	.971	leading	1.0319	125.8	-32.3	.969	leading	1.0352	125.8	-25	.981	leading	1.0192
75	125.8	-30.7	.971	leading	1.0319	125.8	-32.3	.969	leading	1.0352	125.8	-25	.981	leading	1.0192
76	125.8	-30.8	.971	leading	1.0319	125.8	-32.3	.969	leading	1.0352	125.8	-25	.981	leading	1.0192
77	125.8	-30.8	.971	leading	1.0319	125.8	-32.2	.969	leading	1.0352	125.8	-25	.981	leading	1.0192
82	125.8	-30.7	.971	leading	1.0319	125.8	-32.2	.969	leading	1.0352	125.8	-25	.981	leading	1.0192
83	125.8	-30.7	.971	leading	1.0319	125.8	-32.1	.969	leading	1.0352	125.8	-25	.981	leading	1.0192
84	125.8	-29.7	.973	leading	1.0319	125.8	-30.9	.971	leading	1.0352	125.8	-24.9	.981	leading	1.0192
85	125.8	-30.9	.971	leading	1.0319	125.8	-32.4	.968	leading	1.0352	125.8	-25.1	.981	leading	1.0192
86	125.8	-31.9	.969	leading	1.0319	125.8	-33.4	.967	leading	1.0352	125.8	-25.6	.980	leading	1.0192
87											125.8	-23.8	.983	leading	1.0192
88											125.8	-24.5	.982	leading	1.0192

89											125.8	-24.6	.981	leading	1.0192
90	125.8	-30.5	.972	leading	1.0319	125.8	-32.1	.969	leading	1.0352	125.8	-24.8	.981	leading	1.0192
91	125.8	-30.8	.971	leading	1.0319	125.8	-32.3	.969	leading	1.0352	125.8	-25	.981	leading	1.0192
92											125.8	-25	.981	leading	1.0192
93	125.8	-29.4	.974	leading	1.0319	125.8	-29.9	.973	leading	1.0352	125.8	-24.5	.982	leading	1.0192
94	125.8	-25.2	.981	leading	1.0319	125.8	-29.3	.974	leading	1.0352	125.8	-23	.984	leading	1.0192
95	125.8	-22.6	.984	leading	1.0319	125.8	-26.9	.978	leading	1.0352	125.8	-20.6	.987	leading	1.0192
96	125.8	-30.6	.972	leading	1.0319	125.8	-32.2	.969	leading	1.0352	125.8	-24.9	.981	leading	1.0192
97	125.8	-25.3	.980	leading	1.0319	125.8	-28	.976	leading	1.0352	125.8	-22.8	.984	leading	1.0192
98	125.8	-35.5	.962	leading	1.0319	125.8	-36.1	.961	leading	1.0352	125.8	-23.3	.983	leading	1.0192
99	125.8	-29.3	.974	leading	1.0319	125.8	-30.8	.971	leading	1.0352	125.8	-23.8	.983	leading	1.0192

POI-560733

	2015 Summer Peak					2015 Winter Peak					2025 Summer Peak				
Cont. No.	P(MW)	Q(MVAR)	Power Factor		V(PU)	P(MW)	Q(MVAR)	Power Factor		V(PU)	P(MW)	Q(MVAR)	Power Factor		V(PU)
0	160	-36.5	.975	leading	1.0044	160	-34.8	.977	leading	1.0024	160	-42.2	.967	leading	1.0128
1	160	-29.7	.983	leading	1.0044	160	-20	.992	leading	1.0024	160	-28.9	.984	leading	1.0128
2	160	-27	.986	leading	1.0044	160	-18.8	.993	leading	1.0024	160	-27.4	.986	leading	1.0128
3	160	-25.8	.987	leading	1.0044	160	-31.2	.982	leading	1.0024	160	-40.1	.970	leading	1.0128
4	160	-67.2	.922	leading	1.0044	160	-64.9	.927	leading	1.0024	160	-73.6	.908	leading	1.0128
5	160	-41.5	.968	leading	1.0044	160	-34.5	.978	leading	1.0024	160	-50.5	.954	leading	1.0128
6	160	-31.2	.982	leading	1.0044	160	-29.9	.983	leading	1.0024	160	-36.2	.975	leading	1.0128
7	160	-34	.978	leading	1.0044	160	-33.2	.979	leading	1.0024	160	-38.7	.972	leading	1.0128
8	160	-1.5	1.000	leading	1.0044	160	0.9	1.000	lagging	1.0024	160	-10.5	.998	leading	1.0128
9	160	-25	.988	leading	1.0044	160	-18.9	.993	leading	1.0024	160	-34.3	.978	leading	1.0128
10	160	66.2	.924	lagging	1.0044	160	66.2	.924	lagging	1.0024	160	37.2	.974	lagging	1.0128
11											160	14	.996	lagging	1.0128
12	160	-20	.992	leading	1.0044	160	-16.1	.995	leading	1.0024	160	-29	.984	leading	1.0128
13	160	-15.9	.995	leading	1.0044	160	-33.7	.979	leading	1.0024	160	-34.9	.977	leading	1.0128
14	160	-36.4	.975	leading	1.0044	160	-27.9	.985	leading	1.0024	160	-41.2	.968	leading	1.0128
15	160	-37	.974	leading	1.0044	160	-33.9	.978	leading	1.0024	160	-42.2	.967	leading	1.0128
16	160	-28.9	.984	leading	1.0044	160	-25.3	.988	leading	1.0024	160	-34.2	.978	leading	1.0128
17	160	-28.9	.984	leading	1.0044	160	-25.3	.988	leading	1.0024	160	-35	.977	leading	1.0128
20	160	-28.9	.984	leading	1.0044	160	-25.3	.988	leading	1.0024	160	-19.5	.993	leading	1.0128
21	160	-24.6	.988	leading	1.0044	160	-20	.992	leading	1.0024	160	-38.8	.972	leading	1.0128
22	160	-28.9	.984	leading	1.0044	160	-25.3	.988	leading	1.0024	160	-34.2	.978	leading	1.0128
24	160	-24.9	.988	leading	1.0044	160	-20.9	.992	leading	1.0024	160	-28.6	.984	leading	1.0128
25	160	-57.1	.942	leading	1.0044	160	-55.3	.945	leading	1.0024	160	-64.1	.928	leading	1.0128
26	160	-18.2	.994	leading	1.0044	160	-18.5	.993	leading	1.0024	160	-34.1	.978	leading	1.0128
27	160	-28.8	.984	leading	1.0044	160	-34.9	.977	leading	1.0024	160	-38.4	.972	leading	1.0128
28	160	-34.9	.977	leading	1.0044	160	-33.8	.978	leading	1.0024	160	-39.5	.971	leading	1.0128
29	160	-42.2	.967	leading	1.0044	160	-36.5	.975	leading	1.0024	160	-49.8	.955	leading	1.0128
30	160	-28	.985	leading	1.0044	160	-29.3	.984	leading	1.0024	160	-27.1	.986	leading	1.0128
31	160	-36.3	.975	leading	1.0044	160	-35.1	.977	leading	1.0024	160	-41.9	.967	leading	1.0128
33	160	-36.4	.975	leading	1.0044	160	-34.8	.977	leading	1.0024	160	-42.1	.967	leading	1.0128
35	160	-36.2	.975	leading	1.0044	160	-34.6	.977	leading	1.0024	160	-41.8	.968	leading	1.0128
36	160	-36.7	.975	leading	1.0044	160	-34.9	.977	leading	1.0024	160	-42.2	.967	leading	1.0128
38	160	-36.3	.975	leading	1.0044	160	-36.1	.975	leading	1.0024	160	-42.2	.967	leading	1.0128
40	160	-36.5	.975	leading	1.0044	160	-35.6	.976	leading	1.0024	160	-42.4	.967	leading	1.0128
42	160	-36.5	.975	leading	1.0044	160	-34.9	.977	leading	1.0024	160	-42	.967	leading	1.0128
44	160	-36.5	.975	leading	1.0044	160	-34.8	.977	leading	1.0024	160	-42.1	.967	leading	1.0128
45	160	-36.3	.975	leading	1.0044	160	-36.3	.975	leading	1.0024	160	-42.3	.967	leading	1.0128
46	160	-35.8	.976	leading	1.0044	160	-35.8	.976	leading	1.0024	160	-41.9	.967	leading	1.0128
47	160	-26.2	.987	leading	1.0044	160	-26.8	.986	leading	1.0024	160	-34.2	.978	leading	1.0128
48	160	-36.1	.975	leading	1.0044	160	-34.7	.977	leading	1.0024	160	-40	.970	leading	1.0128
50	160	-36.4	.975	leading	1.0044	160	-34.4	.978	leading	1.0024	160	-42.7	.966	leading	1.0128
52	160	-33.3	.979	leading	1.0044	160	-29.3	.984	leading	1.0024	160	-39.5	.971	leading	1.0128
53	160	-36.8	.975	leading	1.0044	160	-34.3	.978	leading	1.0024	160	-43	.966	leading	1.0128
54	160	-35.8	.976	leading	1.0044	160	-35.1	.977	leading	1.0024	160	-41.9	.967	leading	1.0128
55	160	-36.6	.975	leading	1.0044	160	-34.8	.977	leading	1.0024	160	-42.2	.967	leading	1.0128
56	160	-29.4	.984	leading	1.0044	160	-24.3	.989	leading	1.0024	160	-36.4	.975	leading	1.0128
57	160	-29.4	.984	leading	1.0044	160	-24.3	.989	leading	1.0024	160	-36.4	.975	leading	1.0128
58	160	-35.4	.976	leading	1.0044	160	-33.8	.978	leading	1.0024	160	-41.1	.969	leading	1.0128
59	160	-26.3	.987	leading	1.0044	160	-21.6	.991	leading	1.0024	160	-31.7	.981	leading	1.0128
60	160	-36.5	.975	leading	1.0044	160	-34.7	.977	leading	1.0024	160	-42.1	.967	leading	1.0128
61	160	-35	.977	leading	1.0044	160	-33.8	.978	leading	1.0024	160	-40.8	.969	leading	1.0128
62	160	-54.6	.946	leading	1.0044	160	-51.3	.952	leading	1.0024	160	-58.6	.939	leading	1.0128
63	160	-41.2	.968	leading	1.0044	160	-42.9	.966	leading	1.0024	160	-35.3	.977	leading	1.0128
64	160	-125.1	.788	leading	1.0044	160	-129.4	.778	leading	1.0024	160	-117.9	.805	leading	1.0128
65	160	-124.9	.788	leading	1.0044	160	-128.8	.779	leading	1.0024	160	-118	.805	leading	1.0128
66	160	-37.9	.973	leading	1.0044	160	-38.8	.972	leading	1.0024					
67											160	-43	.966	leading	1.0128
68	160	-32.5	.980	leading	1.0044	160	-36.9	.974	leading	1.0024	160	-41.2	.968	leading	1.0128
69	160	-30.7	.982	leading	1.0044	160	-37.3	.974	leading	1.0024	160	-37.9	.973	leading	1.0128
70	160	-22	.991	leading	1.0044	160	-16.2	.995	leading	1.0024	160	-38.2	.973	leading	1.0128
71	160	-89.2	.873	leading	1.0044	160	-101.3	.845	leading	1.0024	160	-75.8	.904	leading	1.0128
72	160	-1.8	1.000	leading	1.0044	160	6.2	.999	lagging	1.0024	160	-9.2	.998	leading	1.0128
73	160	-42.4	.967	leading	1.0044	160	-41.5	.968	leading	1.0024	160	-45.5	.962	leading	1.0128
74	160	-37.7	.973	leading	1.0044	160	-37.1	.974	leading	1.0024	160	-42.5	.966	leading	1.0128
75	160	-36.6	.975	leading	1.0044	160	-31.3	.981	leading	1.0024	160	-45.1	.962	leading	1.0128
76	160	-43.6	.965	leading	1.0044	160	-37.7	.973	leading	1.0024	160	-48.7	.957	leading	1.0128
77	160	-37.1	.974	leading	1.0044	160	-37.3	.974	leading	1.0024	160	-43.3	.965	leading	1.0128
82	160	-40.9	.969	leading	1.0044	160	-41.1	.969	leading	1.0024	160	-42.3	.967	leading	1.0128
83	160	-31.9	.981	leading	1.0044	160	-24.9	.988	leading	1.0024	160	-41	.969	leading	1.0128
84	160	-42.4	.967	leading	1.0044	160	-63.1	.930	leading	1.0024	160	-35.9	.976	leading	1.0128
85	160	-35.4	.976	leading	1.0044	160	-34.3	.978	leading	1.0024	160	-42.3	.967	leading	1.0128
86	160	9.8	.998	lagging	1.0044	160	-3.2	1.000	leading	1.0024	160	-37.8	.973	leading	1.0128
87											160	-21.8	.991	leading	1.0128
88											160	-17	.994	leading	1.0128

89											160	-21.5	.991	leading	1.0128
90	160	-35.6	.976	leading	1.0044	160	-33.6	.979	leading	1.0024	160	-41.4	.968	leading	1.0128
91	160	-36.5	.975	leading	1.0044	160	-34.8	.977	leading	1.0024	160	-42.1	.967	leading	1.0128
92											160	-42	.967	leading	1.0128
93	160	-31.2	.982	leading	1.0044	160	-31.7	.981	leading	1.0024	160	-37.1	.974	leading	1.0128
94	160	-28.3	.985	leading	1.0044	160	-26.4	.987	leading	1.0024	160	-35.5	.976	leading	1.0128
95	160	-27.3	.986	leading	1.0044	160	-24.5	.988	leading	1.0024	160	-34.5	.978	leading	1.0128
96	160	-35.8	.976	leading	1.0044	160	-34.6	.977	leading	1.0024	160	-41.5	.968	leading	1.0128
97	160	-26.7	.986	leading	1.0044	160	-17.2	.994	leading	1.0024	160	-29.7	.983	leading	1.0128
98	160	-14.9	.996	leading	1.0044	160	-32.7	.980	leading	1.0024	160	-34	.978	leading	1.0128
99	160	-32.5	.980	leading	1.0044	160	-28.1	.985	leading	1.0024	160	-38	.973	leading	1.0128

POI-640226

	2015 Summer Peak					2015 Winter Peak					2025 Summer Peak				
Cont. No.	P(MW)	Q(MVAR)	Power Factor		V(PU)	P(MW)	Q(MVAR)	Power Factor		V(PU)	P(MW)	Q(MVAR)	Power Factor		V(PU)
0	150.4	-30.3	.980	leading	1.0299	150.4	-36.8	.971	leading	1.039	150.4	-31.7	.979	leading	1.0316
1	150.4	-31.2	.979	leading	1.0299	150.4	-37.7	.970	leading	1.039	150.4	-33.5	.976	leading	1.0316
2	150.4	-29.2	.982	leading	1.0299	150.4	-36.7	.971	leading	1.039	150.4	-31.4	.979	leading	1.0316
3	150.4	-23.9	.988	leading	1.0299	150.4	-31.7	.979	leading	1.039	150.4	-21.1	.990	leading	1.0316
4	150.4	-29.1	.982	leading	1.0299	150.4	-35.2	.974	leading	1.039	150.4	-29.7	.981	leading	1.0316
5	150.4	-30.5	.980	leading	1.0299	150.4	-36.3	.972	leading	1.039	150.4	-32	.978	leading	1.0316
6	150.4	-30	.981	leading	1.0299	150.4	-36.7	.971	leading	1.039	150.4	-31.8	.978	leading	1.0316
7	150.4	-30.2	.980	leading	1.0299	150.4	-36.4	.972	leading	1.039	150.4	-32.2	.978	leading	1.0316
8	150.4	-31.4	.979	leading	1.0299	150.4	-37.9	.970	leading	1.039	150.4	-34.5	.975	leading	1.0316
9	150.4	-30.6	.980	leading	1.0299	150.4	-35.2	.974	leading	1.039	150.4	-33.5	.976	leading	1.0316
10	150.4	-30.7	.980	leading	1.0299	150.4	-39.4	.967	leading	1.039	150.4	-33.7	.976	leading	1.0316
11											150.4	-46.5	.955	leading	1.0316
12	150.4	-28.5	.983	leading	1.0299	150.4	-33.6	.976	leading	1.039	150.4	-28.4	.983	leading	1.0316
13	150.4	-24.3	.987	leading	1.0299	150.4	-34	.975	leading	1.039	150.4	-24.6	.987	leading	1.0316
14	150.4	-31.3	.979	leading	1.0299	150.4	-36.9	.971	leading	1.039	150.4	-32.4	.978	leading	1.0316
15	150.4	-30.4	.980	leading	1.0299	150.4	-36.7	.971	leading	1.039	150.4	-31.7	.979	leading	1.0316
16	150.4	-27.6	.984	leading	1.0299	150.4	-32.9	.977	leading	1.039	150.4	-27.9	.983	leading	1.0316
17	150.4	-27.6	.984	leading	1.0299	150.4	-32.9	.977	leading	1.039	150.4	-28	.983	leading	1.0316
20	150.4	-27.6	.984	leading	1.0299	150.4	-32.9	.977	leading	1.039	150.4	-22.7	.989	leading	1.0316
21	150.4	-19.8	.991	leading	1.0299	150.4	-27.5	.984	leading	1.039	150.4	-16.5	.994	leading	1.0316
22	150.4	-27.6	.984	leading	1.0299	150.4	-32.9	.977	leading	1.039	150.4	-27.9	.983	leading	1.0316
24	150.4	-29.1	.982	leading	1.0299	150.4	-36	.973	leading	1.039	150.4	-32.1	.978	leading	1.0316
25	150.4	-28.2	.983	leading	1.0299	150.4	-34.4	.975	leading	1.039	150.4	-28.3	.983	leading	1.0316
26	150.4	-29.7	.981	leading	1.0299	150.4	-33.9	.976	leading	1.039	150.4	-26.7	.985	leading	1.0316
27	150.4	-30.3	.980	leading	1.0299	150.4	-37	.971	leading	1.039	150.4	-32.5	.977	leading	1.0316
28	150.4	-30.3	.980	leading	1.0299	150.4	-37.1	.971	leading	1.039	150.4	-32.3	.978	leading	1.0316
29	150.4	-30.3	.980	leading	1.0299	150.4	-34.8	.974	leading	1.039	150.4	-34.6	.975	leading	1.0316
30	150.4	-29.9	.981	leading	1.0299	150.4	-34.3	.975	leading	1.039	150.4	-37.5	.970	leading	1.0316
31	150.4	-30.2	.980	leading	1.0299	150.4	-36.9	.971	leading	1.039	150.4	-31.6	.979	leading	1.0316
33	150.4	-30.3	.980	leading	1.0299	150.4	-36.8	.971	leading	1.039	150.4	-31.7	.979	leading	1.0316
35	150.4	-30.3	.980	leading	1.0299	150.4	-36.8	.971	leading	1.039	150.4	-31.6	.979	leading	1.0316
36	150.4	-30.4	.980	leading	1.0299	150.4	-36.9	.971	leading	1.039	150.4	-31.7	.979	leading	1.0316
38	150.4	-29.7	.981	leading	1.0299	150.4	-36.8	.971	leading	1.039	150.4	-31.3	.979	leading	1.0316
40	150.4	-29.9	.981	leading	1.0299	150.4	-36.5	.972	leading	1.039	150.4	-31.5	.979	leading	1.0316
42	150.4	-30.4	.980	leading	1.0299	150.4	-37	.971	leading	1.039	150.4	-31.8	.978	leading	1.0316
44	150.4	-30.3	.980	leading	1.0299	150.4	-36.9	.971	leading	1.039	150.4	-31.7	.979	leading	1.0316
45	150.4	-29.6	.981	leading	1.0299	150.4	-36.8	.971	leading	1.039	150.4	-31.2	.979	leading	1.0316
46	150.4	-29.6	.981	leading	1.0299	150.4	-36.7	.971	leading	1.039	150.4	-31.2	.979	leading	1.0316
47	150.4	-26.4	.985	leading	1.0299	150.4	-31.2	.979	leading	1.039	150.4	-26.5	.985	leading	1.0316
48	150.4	-30.4	.980	leading	1.0299	150.4	-36.9	.971	leading	1.039	150.4	-31.8	.978	leading	1.0316
50	150.4	-30.3	.980	leading	1.0299	150.4	-36.6	.972	leading	1.039	150.4	-31.7	.979	leading	1.0316
52	150.4	-29.9	.981	leading	1.0299	150.4	-36	.973	leading	1.039	150.4	-31.1	.979	leading	1.0316
53	150.4	-30.3	.980	leading	1.0299	150.4	-36.6	.972	leading	1.039	150.4	-31.6	.979	leading	1.0316
54	150.4	-30.1	.981	leading	1.0299	150.4	-36.6	.972	leading	1.039	150.4	-31.5	.979	leading	1.0316
55	150.4	-30.3	.980	leading	1.0299	150.4	-36.8	.971	leading	1.039	150.4	-31.8	.978	leading	1.0316
56	150.4	-29.3	.982	leading	1.0299	150.4	-34.8	.974	leading	1.039	150.4	-30.1	.981	leading	1.0316
57	150.4	-29.3	.982	leading	1.0299	150.4	-34.8	.974	leading	1.039	150.4	-30.1	.981	leading	1.0316
58	150.4	-30.2	.980	leading	1.0299	150.4	-36.7	.971	leading	1.039	150.4	-31.6	.979	leading	1.0316
59	150.4	-28.9	.982	leading	1.0299	150.4	-34.4	.975	leading	1.039	150.4	-30.1	.981	leading	1.0316
60	150.4	-30.3	.980	leading	1.0299	150.4	-36.8	.971	leading	1.039	150.4	-31.7	.979	leading	1.0316
61	150.4	-30.2	.980	leading	1.0299	150.4	-36.7	.971	leading	1.039	150.4	-31.5	.979	leading	1.0316
62	150.4	-30	.981	leading	1.0299	150.4	-36.3	.972	leading	1.039	150.4	-32.2	.978	leading	1.0316
63	150.4	-29.3	.982	leading	1.0299	150.4	-35.6	.973	leading	1.039	150.4	-34.2	.975	leading	1.0316
64	150.4	-18.6	.992	leading	1.0299	150.4	-23	.989	leading	1.039	150.4	-27.1	.984	leading	1.0316
65	150.4	-17.4	.993	leading	1.0299	150.4	-23.2	.988	leading	1.039	150.4	-27.2	.984	leading	1.0316
66	150.4	-30.8	.980	leading	1.0299	150.4	-37.7	.970	leading	1.039					
67											150.4	-33.5	.976	leading	1.0316
68	150.4	-30.7	.980	leading	1.0299	150.4	-37.6	.970	leading	1.039	150.4	-33	.977	leading	1.0316
69	150.4	-31.2	.979	leading	1.0299	150.4	-38.3	.969	leading	1.039	150.4	-34.1	.975	leading	1.0316
70	150.4	-28.7	.982	leading	1.0299	150.4	-35.2	.974	leading	1.039	150.4	-29.5	.981	leading	1.0316
71	150.4	4.4	1.000	lagging	1.0299	150.4	-4.2	1.000	leading	1.039	150.4	-2.9	1.000	leading	1.0316
72	150.4	-30.8	.980	leading	1.0299	150.4	-38.1	.969	leading	1.039	150.4	-33.8	.976	leading	1.0316
73	150.4	-25.4	.986	leading	1.0299	150.4	-32	.978	leading	1.039	150.4	-27.5	.984	leading	1.0316
74	150.4	-29.2	.982	leading	1.0299	150.4	-35.3	.974	leading	1.039	150.4	-31	.979	leading	1.0316
75	150.4	-30.7	.980	leading	1.0299	150.4	-36.9	.971	leading	1.039	150.4	-31.9	.978	leading	1.0316
76	150.4	-30.3	.980	leading	1.0299	150.4	-36.9	.971	leading	1.039	150.4	-30.8	.980	leading	1.0316
77	150.4	-25.4	.986	leading	1.0299	150.4	-31.6	.979	leading	1.039	150.4	-27.2	.984	leading	1.0316
82	150.4	-30	.981	leading	1.0299	150.4	-36.5	.972	leading	1.039	150.4	-32.5	.977	leading	1.0316
83	150.4	-21.6	.990	leading	1.0299	150.4	-25.6	.986	leading	1.039	150.4	-32.6	.977	leading	1.0316
84	150.4	-12.5	.997	leading	1.0299	150.4	-18.6	.992	leading	1.039	150.4	-23.7	.988	leading	1.0316
85	150.4	-25.1	.986	leading	1.0299	150.4	-31.6	.979	leading	1.039	150.4	-25.4	.986	leading	1.0316
86	150.4	3.4	1.000	lagging	1.0299	150.4	10.2	.998	lagging	1.039	150.4	10.8	.997	lagging	1.0316
87											150.4	-36.3	.972	leading	1.0316
88											150.4	-44.3	.959	leading	1.0316

89											150.4	-38	.970	leading	1.0316
90	150.4	-30	.981	leading	1.0299	150.4	-36.6	.972	leading	1.039	150.4	-31.3	.979	leading	1.0316
91	150.4	-30.3	.980	leading	1.0299	150.4	-36.8	.971	leading	1.039	150.4	-31.7	.979	leading	1.0316
92											150.4	-31.8	.978	leading	1.0316
93	150.4	-29.6	.981	leading	1.0299	150.4	-35.8	.973	leading	1.039	150.4	-31	.979	leading	1.0316
94	150.4	-29.2	.982	leading	1.0299	150.4	-35.4	.973	leading	1.039	150.4	-29.8	.981	leading	1.0316
95	150.4	-28.9	.982	leading	1.0299	150.4	-35	.974	leading	1.039	150.4	-29.5	.981	leading	1.0316
96	150.4	-30.2	.980	leading	1.0299	150.4	-36.8	.971	leading	1.039	150.4	-31.7	.979	leading	1.0316
97	150.4	-30.1	.981	leading	1.0299	150.4	-35.9	.973	leading	1.039	150.4	-31.2	.979	leading	1.0316
98	150.4	-23.8	.988	leading	1.0299	150.4	-33.7	.976	leading	1.039	150.4	-24.1	.987	leading	1.0316
99	150.4	-28.9	.982	leading	1.0299	150.4	-35.3	.974	leading	1.039	150.4	-29.3	.982	leading	1.0316

POI-640521

	2015 Summer Peak					2015 Winter Peak					2025 Summer Peak				
Cont. No.	P(MW)	Q(MVAR)	Power Factor		V(PU)	P(MW)	Q(MVAR)	Power Factor		V(PU)	P(MW)	Q(MVAR)	Power Factor		V(PU)
0	300.7	-2.4	1.000	leading	1	300.7	-20.9	.998	leading	1.0102	300.7	-21	.998	leading	1.0099
1	300.7	-4.1	1.000	leading	1	300.7	-21.9	.997	leading	1.0102	300.7	-22.1	.997	leading	1.0099
2	300.7	0.7	1.000	lagging	1	300.7	-18.9	.998	leading	1.0102	300.7	-18.7	.998	leading	1.0099
3	300.7	17.9	.998	lagging	1	300.7	-9.7	.999	leading	1.0102	300.7	-5.3	1.000	leading	1.0099
4	300.7	1.8	1.000	lagging	1	300.7	-16.6	.998	leading	1.0102	300.7	-17	.998	leading	1.0099
5	300.7	0.3	1.000	lagging	1	300.7	-23.1	.997	leading	1.0102	300.7	-16.5	.998	leading	1.0099
6	300.7	-2.6	1.000	leading	1	300.7	-21.3	.998	leading	1.0102	300.7	-21.2	.998	leading	1.0099
7	300.7	-2	1.000	leading	1	300.7	-20.8	.998	leading	1.0102	300.7	-20.5	.998	leading	1.0099
8	300.7	-0.6	1.000	leading	1	300.7	-21	.998	leading	1.0102	300.7	-19.7	.998	leading	1.0099
9	300.7	0.6	1.000	lagging	1	300.7	-20.7	.998	leading	1.0102	300.7	-17.8	.998	leading	1.0099
10	300.7	-2.7	1.000	leading	1	300.7	-21.8	.997	leading	1.0102	300.7	-21.5	.997	leading	1.0099
11											300.7	-18.4	.998	leading	1.0099
12	300.7	15.2	.999	lagging	1	300.7	0.3	1.000	lagging	1.0102	300.7	-3.3	1.000	leading	1.0099
13	300.7	112.8	.936	lagging	1	300.7	117.9	.931	lagging	1.0102	300.7	-3.6	1.000	leading	1.0099
14	300.7	139.2	.907	lagging	1	300.7	141.7	.905	lagging	1.0102	300.7	104.7	.944	lagging	1.0099
15	300.7	-2.7	1.000	leading	1	300.7	-16.8	.998	leading	1.0102	300.7	-19.2	.998	leading	1.0099
16	300.7	4.1	1.000	lagging	1	300.7	-16.4	.999	leading	1.0102	300.7	-15.5	.999	leading	1.0099
17	300.7	4.1	1.000	lagging	1	300.7	-16.4	.999	leading	1.0102	300.7	-16.4	.999	leading	1.0099
20	300.7	4.1	1.000	lagging	1	300.7	-16.4	.999	leading	1.0102	300.7	-5.8	1.000	leading	1.0099
21	300.7	32.1	.994	lagging	1	300.7	-0.3	1.000	leading	1.0102	300.7	6.3	1.000	lagging	1.0099
22	300.7	4.1	1.000	lagging	1	300.7	-16.4	.999	leading	1.0102	300.7	-15.5	.999	leading	1.0099
24	300.7	-1.9	1.000	leading	1	300.7	-21.6	.997	leading	1.0102	300.7	-20.4	.998	leading	1.0099
25	300.7	1.8	1.000	lagging	1	300.7	-16.8	.998	leading	1.0102	300.7	-17.3	.998	leading	1.0099
26	300.7	3.2	1.000	lagging	1	300.7	-16.4	.999	leading	1.0102	300.7	-16.9	.998	leading	1.0099
27	300.7	5.1	1.000	lagging	1	300.7	-19.6	.998	leading	1.0102	300.7	-17.5	.998	leading	1.0099
28	300.7	-4.6	1.000	leading	1	300.7	-22	.997	leading	1.0102	300.7	-22.7	.997	leading	1.0099
29	300.7	0.6	1.000	lagging	1	300.7	-20.6	.998	leading	1.0102	300.7	-17.7	.998	leading	1.0099
30	300.7	0.8	1.000	lagging	1	300.7	-20.5	.998	leading	1.0102	300.7	-16.9	.998	leading	1.0099
31	300.7	-0.3	1.000	leading	1	300.7	-20.1	.998	leading	1.0102	300.7	-17.2	.998	leading	1.0099
33	300.7	-1.6	1.000	leading	1	300.7	-20.6	.998	leading	1.0102	300.7	-20.5	.998	leading	1.0099
35	300.7	-1.6	1.000	leading	1	300.7	-20.5	.998	leading	1.0102	300.7	-18.1	.998	leading	1.0099
36	300.7	-2.5	1.000	leading	1	300.7	-20.7	.998	leading	1.0102	300.7	-21.4	.997	leading	1.0099
38	300.7	0.7	1.000	lagging	1	300.7	-21.7	.997	leading	1.0102	300.7	-20.9	.998	leading	1.0099
40	300.7	-1.7	1.000	leading	1	300.7	-22.3	.997	leading	1.0102	300.7	-23.6	.997	leading	1.0099
42	300.7	-1.7	1.000	leading	1	300.7	-20.5	.998	leading	1.0102	300.7	-19.3	.998	leading	1.0099
44	300.7	-2.2	1.000	leading	1	300.7	-20.9	.998	leading	1.0102	300.7	-20.6	.998	leading	1.0099
45	300.7	1.2	1.000	lagging	1	300.7	-22	.997	leading	1.0102	300.7	-21.2	.998	leading	1.0099
46	300.7	2.9	1.000	lagging	1	300.7	-20.8	.998	leading	1.0102	300.7	-16.5	.998	leading	1.0099
47	300.7	32.7	.994	lagging	1	300.7	7.5	1.000	lagging	1.0102	300.7	60.9	.980	lagging	1.0099
48	300.7	-1.4	1.000	leading	1	300.7	-20.7	.998	leading	1.0102	300.7	-16.7	.998	leading	1.0099
50	300.7	-1.9	1.000	leading	1	300.7	-19.5	.998	leading	1.0102	300.7	-21.5	.997	leading	1.0099
52	300.7	0.7	1.000	lagging	1	300.7	-15.7	.999	leading	1.0102	300.7	-17.8	.998	leading	1.0099
53	300.7	-3	1.000	leading	1	300.7	-19.8	.998	leading	1.0102	300.7	-22.6	.997	leading	1.0099
54	300.7	0.5	1.000	lagging	1	300.7	-20.7	.998	leading	1.0102	300.7	-18.8	.998	leading	1.0099
55	300.7	-2.3	1.000	leading	1	300.7	-20.8	.998	leading	1.0102	300.7	-21	.998	leading	1.0099
56	300.7	3.2	1.000	lagging	1	300.7	-7.8	1.000	leading	1.0102	300.7	-12.9	.999	leading	1.0099
57	300.7	3.2	1.000	lagging	1	300.7	-7.8	1.000	leading	1.0102	300.7	-12.9	.999	leading	1.0099
58	300.7	-0.6	1.000	leading	1	300.7	-19.4	.998	leading	1.0102	300.7	-19.1	.998	leading	1.0099
59	300.7	9.2	1.000	lagging	1	300.7	-2.1	1.000	leading	1.0102	300.7	-8.4	1.000	leading	1.0099
60	300.7	-2	1.000	leading	1	300.7	-20.7	.998	leading	1.0102	300.7	-20.8	.998	leading	1.0099
61	300.7	-0.6	1.000	leading	1	300.7	-19.7	.998	leading	1.0102	300.7	-19	.998	leading	1.0099
62	300.7	-2.5	1.000	leading	1	300.7	-21	.998	leading	1.0102	300.7	-21.2	.998	leading	1.0099
63	300.7	-2.7	1.000	leading	1	300.7	-20.9	.998	leading	1.0102	300.7	-21.1	.998	leading	1.0099
64	300.7	-2.8	1.000	leading	1	300.7	-20.8	.998	leading	1.0102	300.7	-21	.998	leading	1.0099
65	300.7	-2.8	1.000	leading	1	300.7	-20.7	.998	leading	1.0102	300.7	-21.1	.998	leading	1.0099
66	300.7	-4.3	1.000	leading	1	300.7	-22.6	.997	leading	1.0102					
67											300.7	-23	.997	leading	1.0099
68	300.7	0.9	1.000	lagging	1	300.7	-19.6	.998	leading	1.0102	300.7	-20.6	.998	leading	1.0099
69	300.7	-2.8	1.000	leading	1	300.7	-21.4	.997	leading	1.0102	300.7	-23	.997	leading	1.0099
70	300.7	-0.9	1.000	leading	1	300.7	-20.3	.998	leading	1.0102	300.7	-20	.998	leading	1.0099
71	300.7	-1.5	1.000	leading	1	300.7	-19.5	.998	leading	1.0102	300.7	-19.4	.998	leading	1.0099
72	300.7	-4.8	1.000	leading	1	300.7	-22.3	.997	leading	1.0102	300.7	-22.6	.997	leading	1.0099
73	300.7	-2.2	1.000	leading	1	300.7	-20.5	.998	leading	1.0102	300.7	-20.9	.998	leading	1.0099
74	300.7	-2.3	1.000	leading	1	300.7	-20.7	.998	leading	1.0102	300.7	-20.8	.998	leading	1.0099
75	300.7	-2.2	1.000	leading	1	300.7	-20.7	.998	leading	1.0102	300.7	-20.8	.998	leading	1.0099
76	300.7	-2.2	1.000	leading	1	300.7	-20.8	.998	leading	1.0102	300.7	-21	.998	leading	1.0099
77	300.7	-2.2	1.000	leading	1	300.7	-20.5	.998	leading	1.0102	300.7	-20.8	.998	leading	1.0099
82	300.7	-1.4	1.000	leading	1	300.7	-19.8	.998	leading	1.0102	300.7	-19.8	.998	leading	1.0099
83	300.7	-2.8	1.000	leading	1	300.7	-20.7	.998	leading	1.0102	300.7	-21.1	.998	leading	1.0099
84	300.7	2	1.000	lagging	1	300.7	-16.1	.999	leading	1.0102	300.7	-20.5	.998	leading	1.0099
85	300.7	-2.5	1.000	leading	1	300.7	-21	.998	leading	1.0102	300.7	-21.2	.998	leading	1.0099
86	300.7	-4.2	1.000	leading	1	300.7	-23.3	.997	leading	1.0102	300.7	-23	.997	leading	1.0099
87											300.7	-14.1	.999	leading	1.0099
88											300.7	-18.5	.998	leading	1.0099

89											300.7	-18.7	.998	leading	1.0099
90	300.7	2	1.000	lagging	1	300.7	-18.7	.998	leading	1.0102	300.7	-17.8	.998	leading	1.0099
91	300.7	-2.4	1.000	leading	1	300.7	-20.9	.998	leading	1.0102	300.7	-20.5	.998	leading	1.0099
92											300.7	3.9	1.000	lagging	1.0099
93	300.7	26.8	.996	lagging	1	300.7	-2.2	1.000	leading	1.0102	300.7	13.9	.999	lagging	1.0099
94	300.7	11.7	.999	lagging	1	300.7	-7.3	1.000	leading	1.0102	300.7	2.2	1.000	lagging	1.0099
95	300.7	12.9	.999	lagging	1	300.7	-3.3	1.000	leading	1.0102	300.7	-3.2	1.000	leading	1.0099
96	300.7	-4.8	1.000	leading	1	300.7	-22.3	.997	leading	1.0102	300.7	-24	.997	leading	1.0099
97	300.7	159.1	.884	lagging	1	300.7	161.2	.881	lagging	1.0102	300.7	136.8	.910	lagging	1.0099
98	300.7	116.7	.932	lagging	1	300.7	119.8	.929	lagging	1.0102	300.7	-2.4	1.000	leading	1.0099
99	300.7	17.5	.998	lagging	1	300.7	-9.9	.999	leading	1.0102	300.7	-6.6	1.000	leading	1.0099

POI-640510

Group 9 System Impact Study Stability Addendum

DISIS-2015-001

July 2015

Generator Interconnection Studies

SPP Southwest Power Pool

Executive Summary

Definitive Interconnection System Impact Study (DISIS-2015-001) Interconnection Customers have requested a study detailing the impacts of interconnecting the following requests, included in Group 9, to the transmission system governed by the Southwest Power Pool (SPP) Open Access Transmission Tariff (OATT). While stability analysis for the DISIS-2015-001 was performed by S&C Electric Company in a separate study, additional sensitivities were performed by SPP to determine if any instability occurs as a result of adding the GEN-2014-059 to the stability limited region of western Nebraska.

One of the Group 9 requests, GEN-2014-059, has requested a Point of Interconnection (POI) on the transmission system of Nebraska Public Power District (NPPD) as a proposed tap on the existing Sidney-Ogallala 230kV transmission line. The requested POI is located in the southwestern region of Nebraska adjacent to facilities that comprise the monitored facilities of the Gerald Gentleman Station (GGS) PTDF NERC permanent flowgate. This flowgate serves as a proxy for the GGS Stability Interface, also known as the Western Nebraska Stability Limitation. Since this Interconnection Customer is requesting interconnection into the region of the Western Nebraska Stability Limitation and is impacting the existing proxy flowgate, additional analysis is needed both in DISIS-2015-001 and within the Interconnection Facilities Study phase. This sensitivity study serves as a preliminary analysis for the Interconnection Customer's GEN-2014-059 impact on these stability limitations.

This preliminary stability sensitivity analysis did find that the stated limit for the GGS stability interface would be exceeded for the interconnection of GEN-2014-059, but did not find that instability would occur. However, taking into account all Interconnection Requests in the area including the WAPA GI-1405 Interconnection Request (600MW on the Sidney to Laramie 345kV) would result in instabilities for minimal output of the GI-1405 and GEN-2014-059 requests.

If GEN-2014-059 proceeds into the Interconnection Facilities Study, further analysis will be undertaken by the Transmission Owner, Nebraska Public Power District, to determine if the existing GGS stability limits can be modified or if there are additional scenarios that need to be addressed to protect the transmission system. It may NOT be possible to mitigate the system instability even through the construction of transmission facilities and the installation of fast switching reactive power equipment. However, that will remain unknown until further analysis can be performed by NPPD during the Interconnection Facilities Study phase. If it is determined that it is NOT possible to mitigate this instability, GEN-2014-059 will not be allowed to interconnect into the transmission system as requested.

Revision History

Date	Change Description	Comments
7/30/2015	Posted as Final for DISIS-2015-001	n/a

Table of Contents

Executive Summary ..... **i**

Revision History ..... **ii**

Table of Contents ..... **iii**

Introduction **1**

Background 1

Purpose 1

Preliminary Analysis **3**

Method 3

Model Preparation 3

Results 4

Conclusion **9**

Introduction

Background

Definitive Interconnection System Impact Study (DISIS-2015-001) Interconnection Customers have requested a study detailing the impacts of interconnecting the following requests, included in Group 9, to the transmission system governed by the Southwest Power Pool (SPP) Open Access Transmission Tariff (OATT).

Generation Interconnection Requests

Request	Size (MW)	Area	Point of Interconnection
GEN-2014-023	79.9	NPPD	Tap Ft Randall to Meadow Grove 230kV (560718)
GEN-2014-059	160.0	NPPD	Tap Sidney-Ogallala 230kV (560014)
GEN-2014-060	125.8	NPPD	Tap Pauline-Hildreth 115kV (560733)
GEN-2015-007	160.0	NPPD	Hoskins 345kV
GEN-2015-008	150.4	NPPD	Antelope 115kV
GEN-2015-023	300.8	NPPD	Holt County 345kV

Of these requests, GEN-2014-059 has requested interconnection into the western Nebraska region which is limited by specific stability constraints. While stability analysis for the DISIS-2015-001 was performed by S&C Electric Company in a separate study, additional sensitivities were performed by SPP to review the impacts of GEN-2014-059 on the Western Nebraska Stability Limitations as specified within Part 5 “Transmission Planning Assessment Practices” of the FERC Form 715 “Annual Transmission Planning and Evaluation Report” submitted March 28, 2014, by Nebraska Public Power District (NPPD). Although this addendum will show some preliminary results, additional analyses will be required should the Interconnection Customer choose to pursue an Interconnection Facilities Study before interconnecting this generation interconnection request into this region of the NPPD transmission system.

Purpose

GEN-2014-059 is comprised of eighty (80) Vestas VCSS 2.0 MW wind turbine generators for an aggregate power of 160.0MW. The requested Point of Interconnection (POI) is on the transmission system of NPPD as a proposed tap on the existing Sidney-Ogallala 230kV transmission line. The requested POI is located in the southwestern region of Nebraska adjacent to facilities that comprise the monitored facilities of the Gerald Gentleman Station (GGS) PTDF NERC permanent flowgate. This flowgate serves as a proxy for the GGS Stability Interface, also known as the Western Nebraska

Stability Limitation. Since this Interconnection Customer is requesting interconnection into the region of the Western Nebraska Stability Limitation and is impacting the existing proxy flowgate, additional analysis is needed both in DISIS-2015-001 and within the Interconnection Facilities Study phase. This study serves as a preliminary analysis for the Interconnection Customer's GEN-2014-059 impact on these stability limitations.

Because the western Nebraska region is fully subscribed, impacts of interconnecting the GEN-2014-059 project must be studied to determine if unreliable situations that could lead to instability, cascading, and loss of load to the entire western Nebraska area will occur.

Preliminary Analysis

Method

This preliminary analysis will perform sensitivities to initially determine the impacts of interconnecting GEN-2014-059 adjacent to elements of the GGS PTDF Flowgate.

According to the NPPD submitted FERC 715, the GGS is a registered NERC Flowgate and posted stability interface on OASIS (https://www.oasis.oati.com/SWPP/index.html). The PTDF Flowgate definition is consistent with the monitored elements for system intact operation of the GGS Stability Interface. The current system intact Total Transfer Capability (TTC) for this interface is fully subscribed. The maximum system intact stability limit has been approved by MAPP and accommodates all of the current firm capacity rights associated with western Nebraska stability limited resources:

Once the stability cases are constructed to ensure these previously reserved system conditions, GEN-2014-059 is added to the case and faults are taken at the GGS 345 kV and the dynamic stability responses are observed for instability.

Model Preparation

Transient stability analysis was performed using a modified version of the 2014 series of Model Development Working Group (MDWG) dynamic study models. The case was modified to ensure these previously reserved system conditions. The case is then loaded with prior queued interconnection requests and network upgrades assigned to those interconnection requests. Finally, the prior queued and study generation are dispatched into the SPP footprint. The 2015 winter peak cluster scenario was evaluated. An initial simulation was carried out for a no-disturbance run of twenty (20) seconds to verify the numerical stability of the model.

Results

After verifying that the system conditions were stable under steady state conditions, a single phase[1] stuck breaker fault on the Gentleman 345kV was simulated. With GEN-2014-059 added to the system and the stuck breaker fault applied, the system remains stable. The plot in Figure 1 demonstrates that interconnecting GEN-2014-059 did not cause instability. The plot in Figure 2 shows the synchronous machine rotor angles of the Gerald Gentlemen Station Unit # 1 and Unit# 2, and the Laramie River Station Unit# 1 remain stable after the fault is cleared. The plot also shows the voltages of some nearby buses remaining stable.

[1] The single-phase line fault was simulated by applying fault impedance to the positive sequence network at the fault location to represent the effect of the negative and zero sequence networks on the positive sequence network. The fault impedance was computed to give a positive sequence voltage at the specified fault location of approximately 60% of pre-fault voltage. This method is in agreement with SPP current practice.

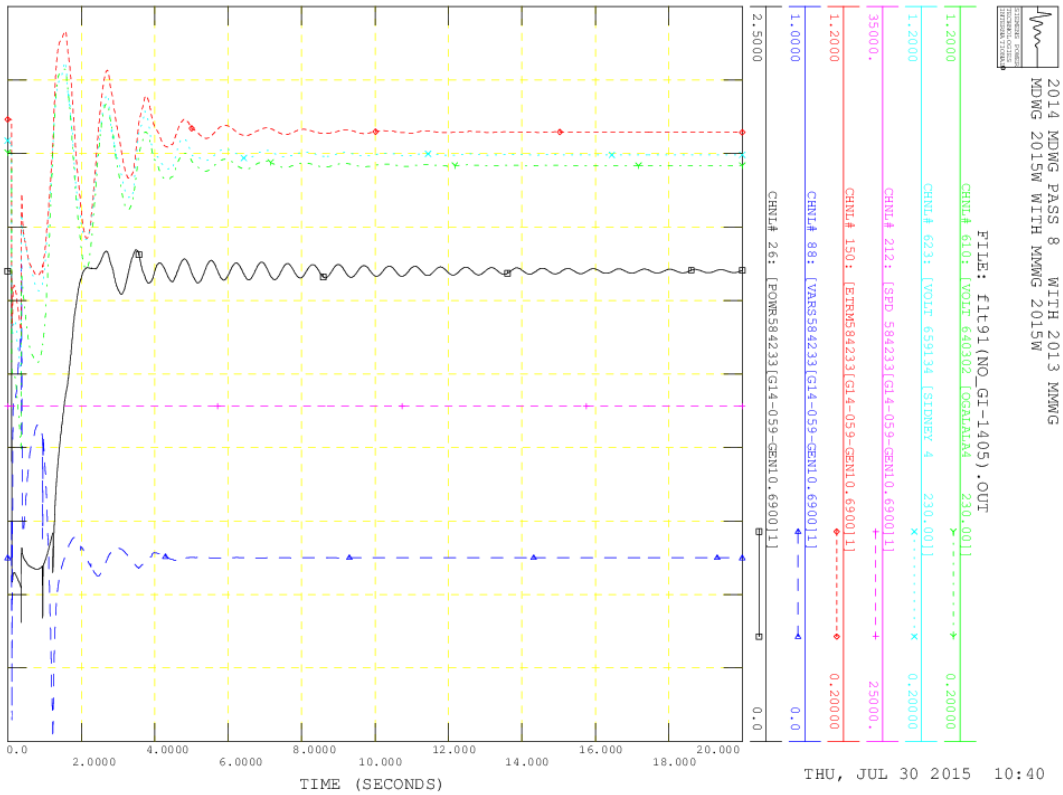

Figure 1: DISIS-2015-001 Group 9 GEN-2014-059 In Service at 160.0MW (Project power, vars,etrm, and speed and voltages on buses either side of project)

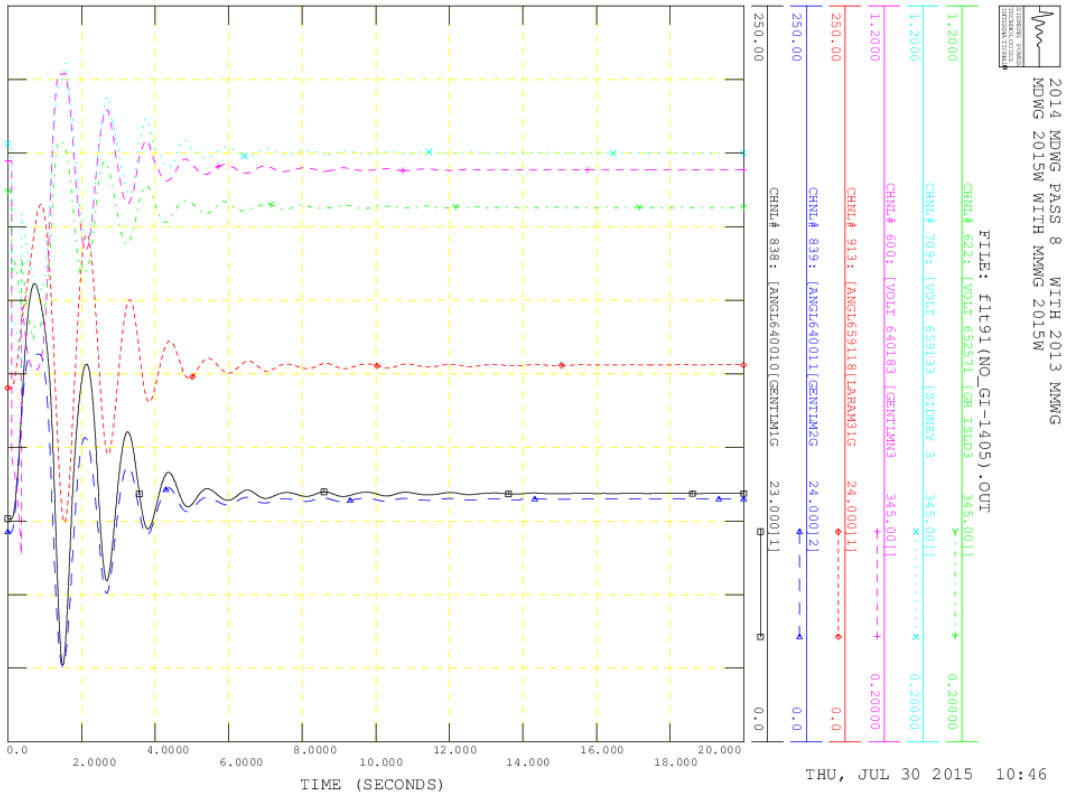

Figure 2: DISIS-2015-001 Group 9 GEN-2014-059 In Service (Some voltages and angles of machines nearby)

Currently, a 600 MW wind project on the Laramie to Sidney 345kV line is being studied by WAPA (GI-1405). A cursory stability analysis was performed by adding the WAPA project to the study case and removing GEN-2014-059 from the case. The GI-1405 project was dispatched at 100MW (a dispatch of 600MW did not allow for a power flow solution to begin analysis). The same stuck breaker fault on the Gentleman 345kV was simulated. The results show that the system becomes unstable. The plot in Figure 3 shows the project power, vars, terminal voltage, and speed are not stable and that the voltages at the buses on either side of the point of interconnection were also not stable. The plot in Figure 4 shows the synchronous machine rotor angles of the Gerald Gentlemen Station Unit # 1 and Unit# 2, and the Laramie River Station Unit# 1 are not stable after the fault is cleared. The plot also shows the oscillatory nature of the voltages of some nearby buses.

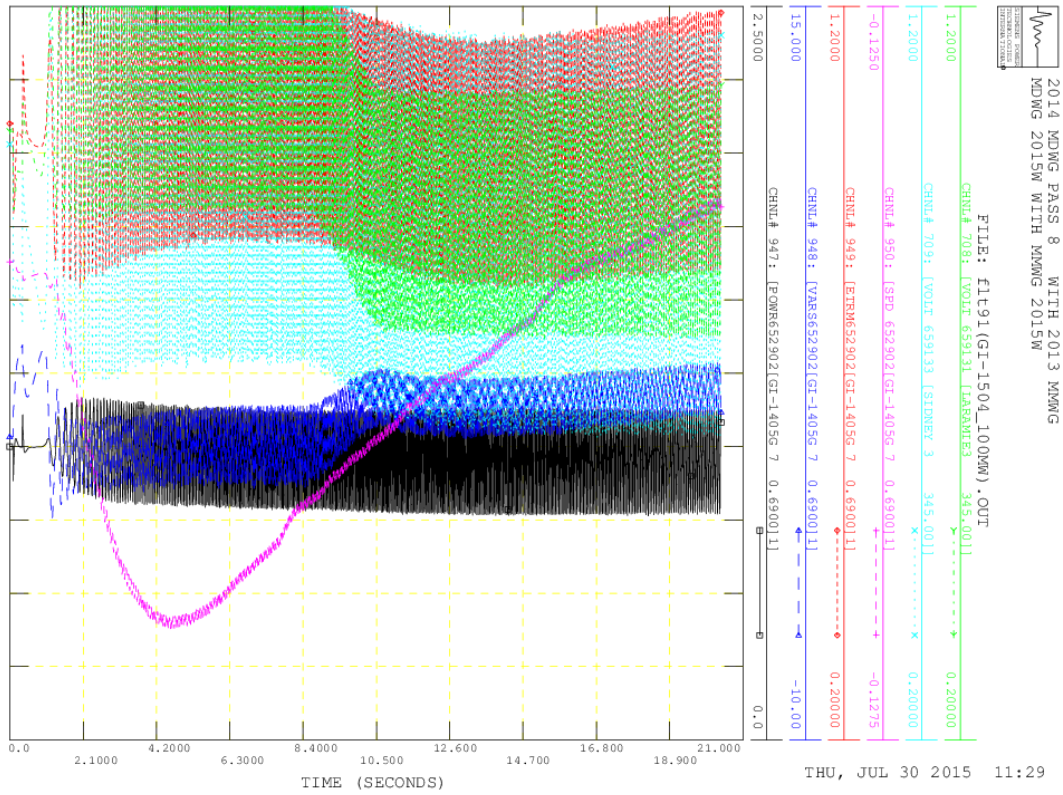

Figure 3: WAPA GI-1405 In Service at 100MW (Project power, vars,etrm, and speed and voltages on buses either side of project)

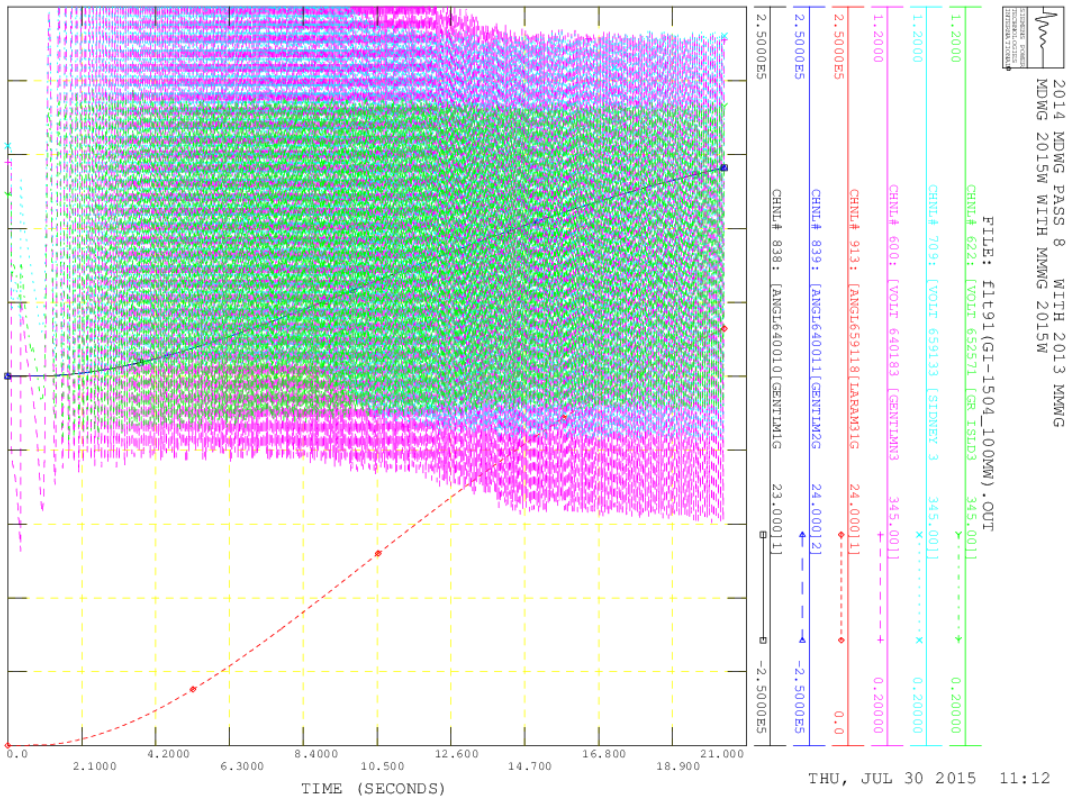

Figure 4: WAPA GI-1405 In Service at 100MW (Some voltages and angles of machines nearby)

Conclusion

Given the results from this preliminary analysis to review the impacts of interconnecting GEN-2014-059 to the stability limited western Nebraska region, SPP must recommend that GEN-2014-059 be studied further in the Interconnection Facilities Study. It should also be noted that it may not be possible to mitigate this instability or may not be possible without the construction or installation of a significant amount of transmission or other related equipment.

S: Group 12 Dynamic Stability Analysis Report

See ABB study report on next page

DEFINITIVE IMPACT STUDY
DISIS-2015-001 (GROUP 12)

FINAL REPORT

July 23, 2015

SUBMITTED TO:
Southwest Power Pool
201 Worthen Drive
Little Rock, AR 72223

SUBMITTED BY:
ABB Inc.
Power Systems Division
Grid Systems Consulting
901 Main Campus Drive, Suite 300
Raleigh, NC 27606

Legal Notice

This document, prepared by ABB Inc., is an account of work sponsored by Southwest Power Pool (SPP). Neither SPP nor ABB Inc, nor any person or persons acting on behalf of either party: (i) makes any warranty or representation, expressed or implied, with respect to the use of any information contained in this report, or that the use of any information, apparatus, method, or process disclosed in this report may not infringe privately owned rights, or (ii) assumes any liabilities with respect to the use of or for damages resulting from the use of any information, apparatus, method, or process disclosed in this document.

ABB Inc – Power Systems Consulting

Technical Report

Southwest Power Pool	**No.** 2015-E15797	
Definitive Impact Study DISIS-2015-001 (Group 12)	7/23/2015	# Pages 10

Author(s):	**Reviewed by:**	**Approved by:**
Junbiao Han	Shu Liu	Willie Wong

Executive Summary

Southwest Power Pool (SPP) has commissioned ABB Inc., to perform a Definitive Impact Study for DISIS-2015-001 (Group 12) which includes generation interconnection request GEN-2015-019 (60 MW combustion-turbine generator connected at the Fitzhugh 161 kV substation).

The objective of this study is to evaluate the impact of project GEN-2015-019 on system stability and short-circuit performance. The study is performed on three system scenarios provided by SPP:

- 2015 Summer Peak Case
- 2015 Winter Peak Case
- 2025 Summer Peak Case

Results of the stability analysis show that the studied system is stable following all simulated faults with the proposed GEN-2015-019 project in-service. There are no voltage violations in the monitored area and the studied generator shows good damping performance which meets the criteria specified.

System short-circuit current levels at up to five buses away from the point of interconnection were calculated and tabulated for SPP's reference.

Based on the results of stability analysis it can be concluded that **the proposed GEN-2015-019 project does not adversely impact the stability of the SPP system**.

The results of this analysis are based on available data and assumptions made at the time of conducting this study. If any of the data and/or assumptions made in developing the study model change, the results provided in this report may not apply.

TABLE OF CONTENTS

1 INTRODUCTION 1
2 STABILITY ANALYSIS 4
2.1 STUDY MODEL DEVELOPMENT 4
2.2 STABILITY ANALYSIS METHODOLOGY 4
2.3 STUDY RESULTS 6
3 SHORT CIRCUIT ANALYSIS 8
4 CONCLUSIONS 10
APPENDIX A SOUTHWEST POWER POOL DISTURBANCE PERFORMANCE CRITERIA REQUIREMENTS 11
APPENDIX B SIMULATION PLOTS FOR STABILITY ANALYSIS 14

1 INTRODUCTION

Southwest Power Pool (SPP) has commissioned ABB Inc., to perform a Definitive Impact Study for DISIS-2015-001 (Group 12) which includes generation interconnection request GEN-2015-019. This is a 60 MW combustion-turbine generator connected at the Fitzhugh 161 kV substation (Point of Interconnection or POI).

The objective of this study is to evaluate the impact of project GEN-2015-019 on system stability and short-circuit performance. The study is performed on three system scenarios provided by SPP:

- 2015 Summer Peak Case
- 2015 Winter Peak Case
- 2025 Summer Peak Case

SPP provided the study cases for all three system scenarios with GEN-2015-019 included. One line diagrams of the local area for all three seasons are shown in Figure 1-1. The studied generator is circled red.

The three system scenarios supplied by SPP included the following prior queued projects for Group12:

Table 1-1: Group 12 Prior Queued Projects

Request	Size (MW)	Generator Model	Point of Interconnection
GEN-2013-011	30.0 Increase (Pmax=683.0)	GENROU (509416)	Turk 138kV (507454)

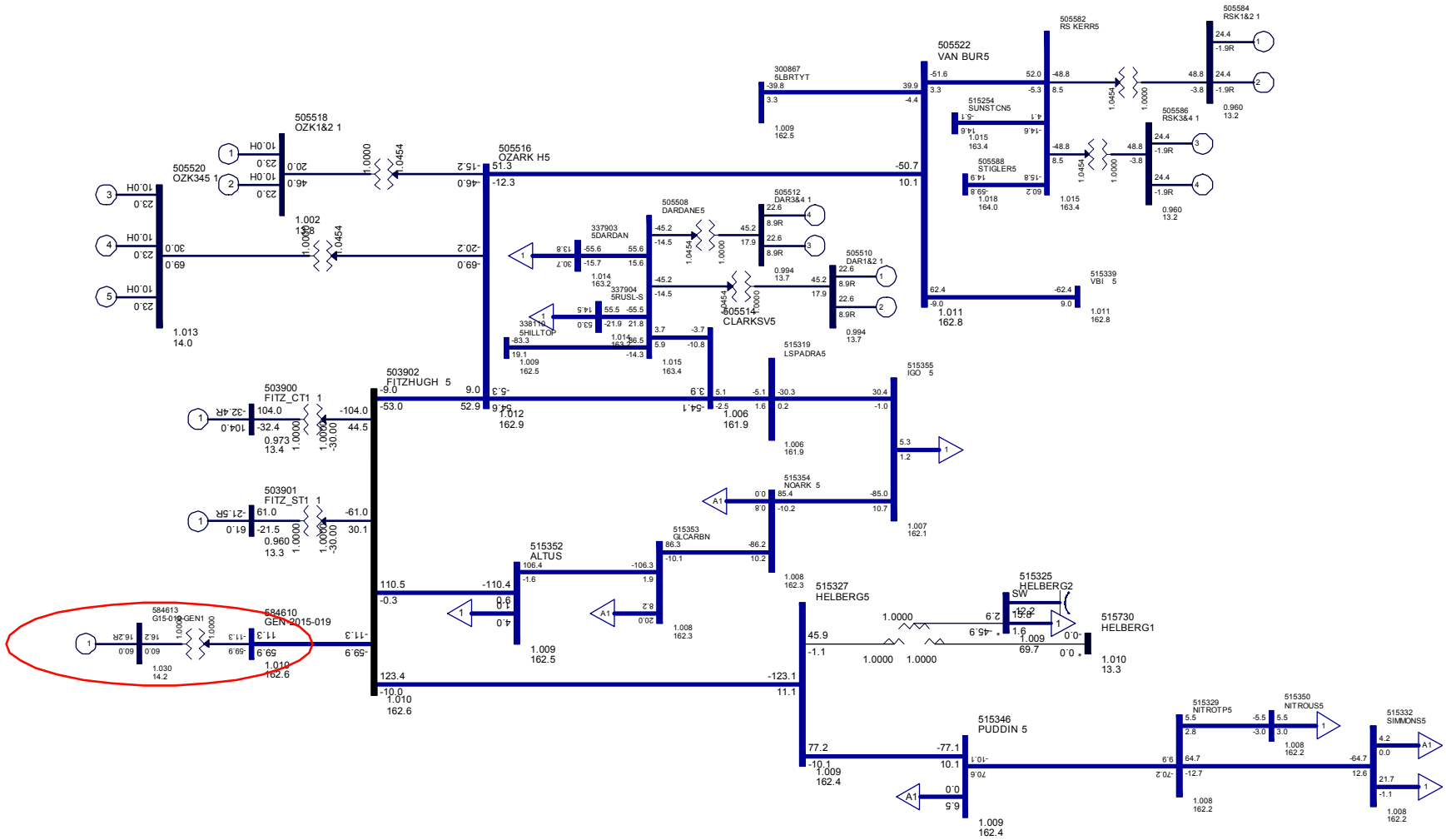

Figure 1-1 (a): One Line Diagram of Fitzhugh Area for 2015 Summer Peak Case

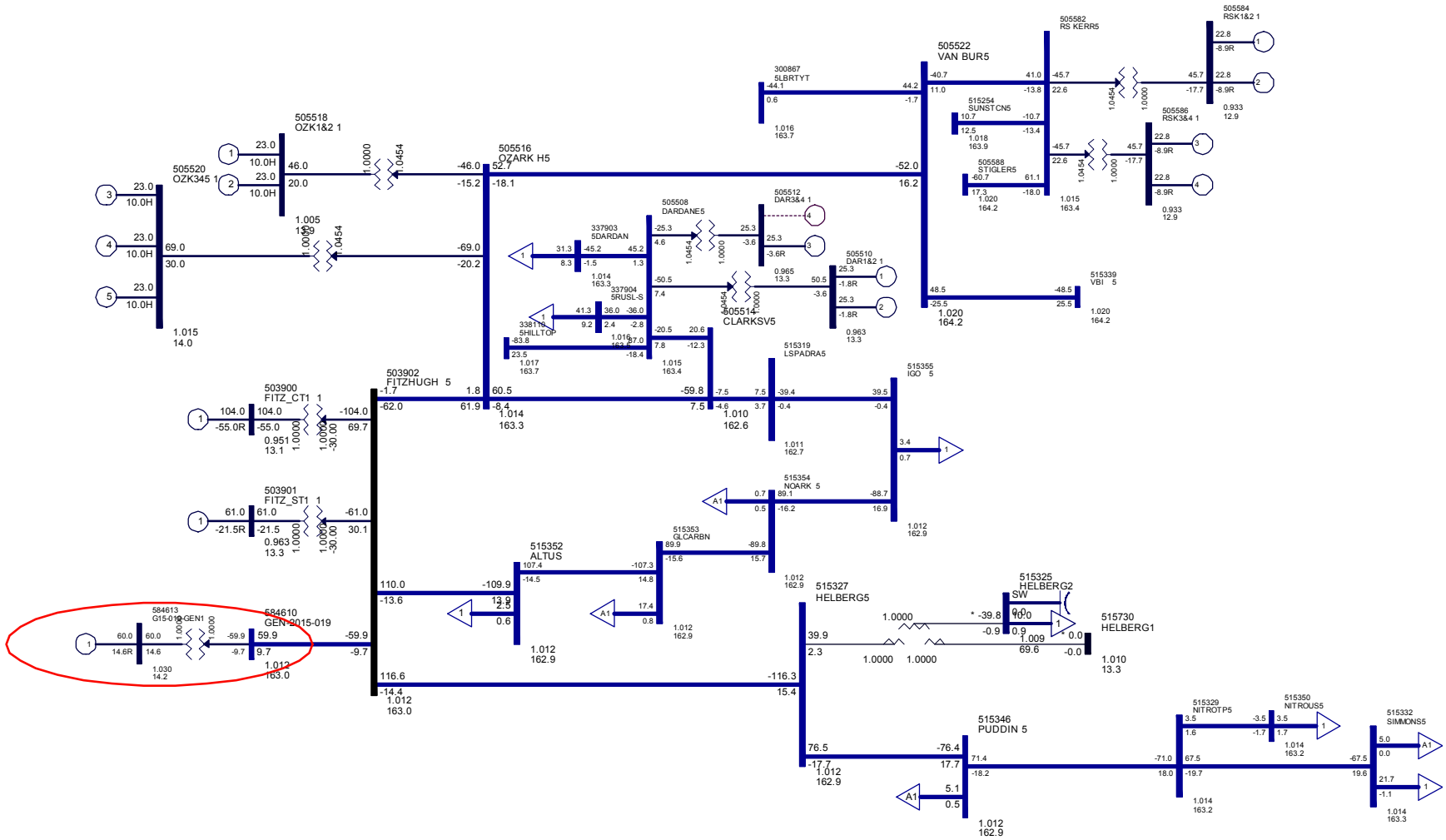

Figure 1-2 (b): One Line Diagram of Fitzhugh Area for 2015 Winter Peak Case

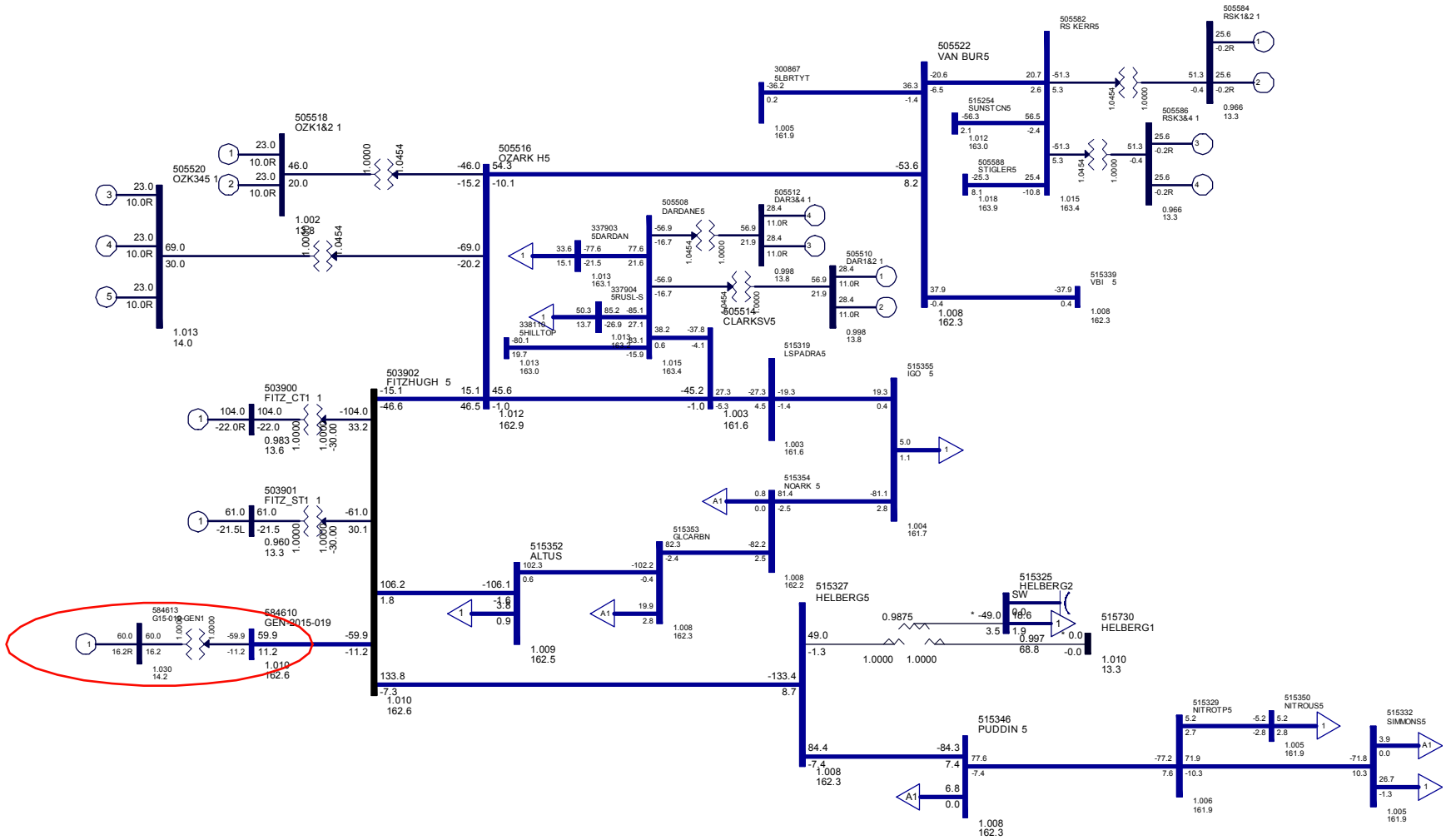

Figure 1-3 (c): One Line Diagram of Fitzhugh Area for 2025 Summer Peak Case

2 STABILITY ANALYSIS

In this study, ABB investigated the stability of the system for faults in the vicinity of the proposed plant as defined by SPP. The studied faults involve three-phase transformer faults with normal clearing, three-phase line faults with normal clearing and re-closing test, and single-line-to-ground (SLG) faults with stuck breaker.

2.1 STUDY MODEL DEVELOPMENT

SPP provided study models for three seasons:

- 2015 Summer peak
- 2015 Winter Peak
- 2025 Summer Peak

For each study model, the GEN-2015-019 project was already built into the power flow and dynamic cases.

According to SPP's comments, generators on bus OZK1&2 1 [505518] and OZK345 1 [505520] should all be in-service and the power outputs are equal to Pmax for three studied cases; hence, base cases change were made accordingly.

2.2 STABILITY ANALYSIS METHODOLOGY

Stability analysis is performed to determine whether the electric system would meet stability criteria following the addition of the GEN-2015-019 project.

Stability analysis was performed using Siemens-PTI's PSS/E dynamics program V32.1.0.

All the faults listed in Table 2-1 were simulated for 20 seconds.

Table 2-1: List of Faults for Stability Analysis

Cont. No.	Cont. Name	Description
1	FLT01-3PH	3 phase fault on the Fitzhugh (503902) to (OKGE) Altus (515352) 161kV line, near Fitzhugh. a. Apply fault at the Fitzhugh 161kV bus. b. Clear fault after 5 cycles by tripping the faulted line. c. Wait 20 cycles, and then re-close the line in (b) back into the fault. d. Leave fault on for 5 cycles, then trip the line in (b) and remove fault.
2	FLT02-1PH	*Single phase fault and sequence like previous*
3	FLT03-3PH	3 phase fault on the Fitzhugh (503902) to (OKGE) Helberg (515327) 161kV line, near Fitzhugh. a. Apply fault at the Fitzhugh 161kV bus. b. Clear fault after 5 cycles by tripping the faulted line. c. Wait 20 cycles, and then re-close the line in (b) back into the fault. d. Leave fault on for 5 cycles, then trip the line in (b) and remove fault.
4	FLT04-1PH	*Single phase fault and sequence like previous*

Cont. No.	Cont. Name	Description
5	FLT05-3PH	3 phase fault on the Fitzhugh (503902) to (SWPA) Ozark Dam (505516) 161kV line, near Fitzhugh. a. Apply fault at the Fitzhugh 161kV bus. b. Clear fault after 5 cycles by tripping the faulted line. c. Wait 20 cycles, and then re-close the line in (b) back into the fault. d. Leave fault on for 5 cycles, then trip the line in (b) and remove fault.
6	FLT06-1PH	*Single phase fault and sequence like previous*
7	FLT07-3PH	3 phase fault on the (SWPA) Ozark Dam (505516) to (SWPA) Van Buren (505522) 161kV line, near Ozark Dam. a. Apply fault at the Ozark Dam 161kV bus. b. Clear fault after 5 cycles by tripping the faulted line. c. Wait 20 cycles, and then re-close the line in (b) back into the fault. d. Leave fault on for 5 cycles, then trip the line in (b) and remove fault.
8	FLT08-1PH	*Single phase fault and sequence like previous*
9	FLT09-3PH	3 phase fault on the (SWPA) Ozark Dam (505516) to (SWPA) Clarksville (505514) 161kV line, near Ozark Dam. a. Apply fault at the Ozark Dam 161kV bus. b. Clear fault after 5 cycles by tripping the faulted line. c. Wait 20 cycles, and then re-close the line in (b) back into the fault. d. Leave fault on for 5 cycles, then trip the line in (b) and remove fault.
10	FLT10-1PH	*Single phase fault and sequence like previous*
11	FLT11-3PH	3 phase fault on the (OKGE) Helberg (515327) 161kV to Helberg (515325) 69kV/(515730) 13.2kV, near Helburg. a. Apply fault at the Helberg 161kV bus. b. Clear fault after 5 cycles by tripping the faulted transformer.
12	FLT12-3PH	3 phase fault on the (OKGE) Helberg (515327) to (OKGE) Puddin' Ridge (515346) 161kV line, near Helberg. a. Apply fault at the Helberg 161kV bus. b. Clear fault after 5 cycles by tripping the faulted line. c. Wait 20 cycles, and then re-close the line in (b) back into the fault. d. Leave fault on for 5 cycles, then trip the line in (b) and remove fault.
13	FLT13-1PH	*Single phase fault and sequence like previous*
14	FLT14-PO	**Prior outage** of the Fitzhugh (503902) to (OKGE) Helberg (515327) 161kV line. 3 phase fault on the Fitzhugh (503902) to (OKGE) Altus (515352) 161kV line, near Fitzhugh. a. Prior outage of Fitzhugh – Helberg 161kV. b. Apply fault at the Fitzhugh 161kV bus. c. Clear fault after 5 cycles by tripping the faulted line. d. Wait 20 cycles, and then re-close the line in (c) back into the fault. e. Leave fault on for 5 cycles, then trip the line in (c) and remove fault.
15	FLT15-PO	**Prior outage** of the Fitzhugh (503902) to (SWPA) Ozark Dam (505516) 161kV line, near Fitzhugh. 3 phase fault on the Fitzhugh (503902) to (OKGE) Altus (515352) 161kV line, near Fitzhugh. a. Prior outage of Fitzhugh – Ozark Dam 161kV. b. Apply fault at the Fitzhugh 161kV bus. c. Clear fault after 5 cycles by tripping the faulted line. d. Wait 20 cycles, and then re-close the line in (c) back into the fault. e. Leave fault on for 5 cycles, then trip the line in (c) and remove fault.

Cont. No.	Cont. Name	Description
16	FLT16-PO	**Prior outage** of the Fitzhugh (503902) to (SWPA) Ozark Dam (505516) 161kV line, near Fitzhugh. 3 phase fault on the Fitzhugh (503902) to (OKGE) Helberg (515327) 161kV line, near Fitzhugh. a. Prior outage of Fitzhugh – Ozark Dam 161kV. b. Apply fault at the Fitzhugh 161kV bus. c. Clear fault after 5 cycles by tripping the faulted line. d. Wait 20 cycles, and then re-close the line in (c) back into the fault. e. Leave fault on for 5 cycles, then trip the line in (c) and remove fault.
17	FLT14-PO	**Prior outage** of the the (OKGE) Helberg (515327) to (OKGE) Puddin' Ridge (515346) 161kV line. 3 phase fault on the (OKGE) Helberg (515327) 161kV to Helberg (515325) 69kV/(515730) 13.2kV, near Helburg. a. Prior outage of (OKGE) Helberg to (OKGE) Puddin' Ridge 161kV. b. Apply fault at the (OKGE) Helberg 161kV bus. c. Clear fault after 5 cycles by tripping the faulted transformer.

Single-line-to-ground faults were simulated with the standard method of applying fault impedance to the positive sequence network to represent the effect of the negative and zero sequence networks on the positive sequence network. The SLG fault impedance was computed by assuming a positive sequence voltage at the fault location at approximately 60% of pre-fault voltage, which is a typical value.

The Southwest Pool Disturbance Performance Criteria Requirements in Appendix A were used to evaluate the system response during the initial transient period following a disturbance on the system. Generator response and bus voltages (115 kV and above) in Area 502, 515, 520, 523, 524, 525, and 351 were monitored to ensure the system performance meets criteria requirements. Rotor angles of the studied generator GEN-2015-019 and other nearby synchronous machines were investigated to make sure they maintained synchronism and had adequate damping following system faults.

2.3 STUDY RESULTS

2.3.1 Simulation Results

The results of all studied disturbances show **no** instability problems or voltage violations for all three seasons (see Table 2-2: Summary of Results). All generators in the system stay online without being tripped following all simulated faults. The studied generator GEN-2015-019 shows good damping performance which meets the criteria specified in Appendix A .

Table 2-2 Study Results Summary

Contingency	2015SP	2015WP	2025SP
FLT01-3PH	Stable	Stable	Stable
FLT02-1PH	Stable	Stable	Stable
FLT03-3PH	Stable	Stable	Stable
FLT04-1PH	Stable	Stable	Stable
FLT05-3PH	Stable	Stable	Stable
FLT06-1PH	Stable	Stable	Stable
FLT07-3PH	Stable	Stable	Stable
FLT08-1PH	Stable	Stable	Stable
FLT09-3PH	Stable	Stable	Stable
FLT10-1PH	Stable	Stable	Stable

Contingency	2015SP	2015WP	2025SP
FLT11-3PH	Stable	Stable	Stable
FLT12-3PH	Stable	Stable	Stable
FLT13-1PH	Stable	Stable	Stable
FLT14-PO	Stable	Stable	Stable
FLT15-PO	Stable	Stable	Stable
FLT16-PO	Stable	Stable	Stable
FLT17-PO	Stable	Stable	Stable

Figure 2-1 shows the response of the studied generator following fault FLT01-3PH for 2015 Summer Peak case. The machine speed, active and reactive power output, and terminal voltage are plotted to show the generator response. All the simulation plots are included in Appendix B.

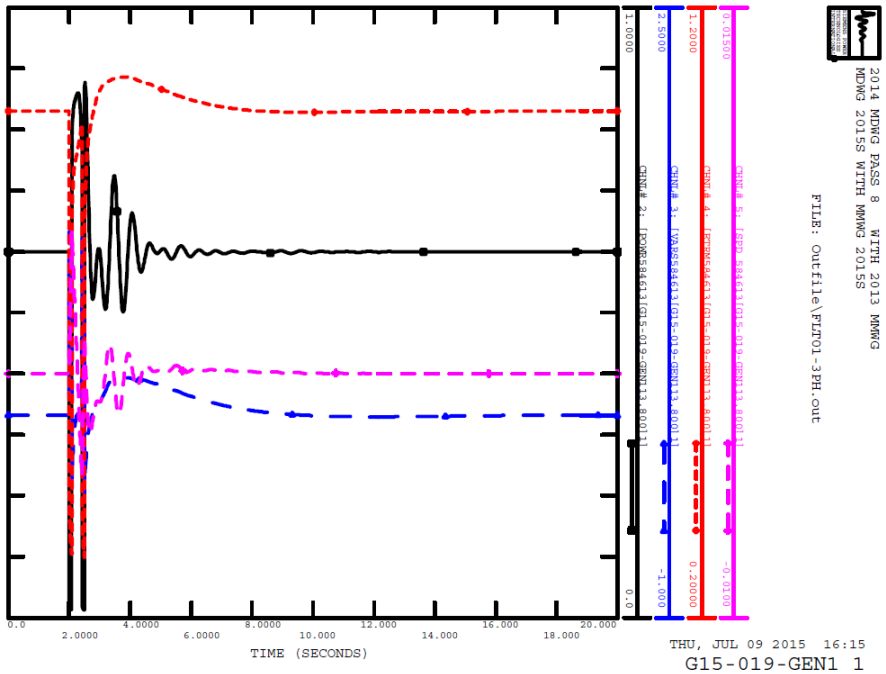

Figure 2-1 GEN-2015-019 Response Following Fault FLT01-3PH for 2015 Summer Peak Case

3 SHORT CIRCUIT ANALYSIS

Short circuit analysis was performed on the 2025 Summer Peak power flow case using the PSS/E program. Since the power flow model does not contain negative and zero sequence data, only three-phase symmetrical fault current levels were calculated at up to five buses away from the point of interconnection.

Table 3-1 tabulates all the three-phase fault current levels, and the calculated values were listed here for SPP's reference.

Table 3-1 Three-Phase Fault Currents

Number	Name	3PH(Amp)	Number	Name	3PH(Amp)
515329	NITROTP5 161.00	8649	505520	OZK345 1 13.800	30249.6
505460	BULL SH5 161.00	13023	505522	VAN BUR5 161.00	17690.1
515332	SIMMONS5 161.00	9095.3	301366	5AKINS 161.00	7495.3
515333	DYER 5 161.00	9628	515769	VBI 1 13.800	11582.8
515335	KLGORE 2 69.000	7058.7	338108	5ST_JOE 161.00	7340.4
515336	VBI 2 69.000	11211.9	338110	5HILLTOP 161.00	8032.7
515337	RUDY 5 161.00	11201.1	515254	SUNSTCN5 161.00	7143.8
515339	VBI 5 161.00	17893.7	515265	SHAD-PT5 161.00	7234.3
515340	OAKGROV5 161.00	14949	300867	5LBRTYT 161.00	8550.3
515341	WHITESD5 161.00	14827.3	515780	LSPADR31 2.3000	12297.6
512655	TAHLQH 5 161.00	10315.4	300869	5LIBRTY 161.00	7983.1
515316	BRANCH 5 161.00	8166.1	505570	EUFAULA5 161.00	7867.9
515346	PUDDIN 5 161.00	9705.1	337905	5RUSL-E 161.00	13633.9
515347	HWY59 5 161.00	15676.5	300877	2STIGLER 69.000	5516.7
515348	NALCOTP5 161.00	15772	515406	ADABELL5 161.00	16031.3
515733	LSPADR41 13.800	2666.7	338517	5MARSHALL# 161.00	6694.9
515350	NITROUS5 161.00	8177.8	505550	SALISAW5 161.00	7512.2
337902	5DANVI 161.00	7003.2	515779	LSPADR21 34.500	2928.7
515352	ALTUS 161.00	10892.5	521124	SUNSTCR5 161.00	7127
515353	GLCARBN 161.00	9988.6	503900	FITZ_CT1 1 13.800	75946.3
515354	NOARK 5 161.00	9407.6	503901	FITZ_ST1 1 13.800	34214.8
515355	IGO 5 161.00	8451.2	503902	FITZHUGH 5 161.00	12023.2
515357	RAZRBAK5 161.00	6778.9	504032	VBI_N 2 69.000	11144.5
515359	MTNBURG5 161.00	4910.1	515298	VBAVEC 2 69.000	8973.2
515360	TWNBRDG5 161.00	13148.6	515708	BRANCH21 13.200	10728.3
505584	RSK1&2 1 13.800	26151.9	515730	HELBERG1 13.200	14011.4
584610	GEN-2015-019161.00	12023.2	505582	RS KERR5 161.00	8289.2
505508	DARDANE5 161.00	12177.8	337903	5DARDAN 161.00	10857.5
584613	G15-019-GEN113.800	44633.8	337904	5RUSL-S 161.00	12340.6

Number	Name	3PH(Amp)	Number	Name	3PH(Amp)
505510	DAR1&2 1 13.800	32868.8	515313	BRANCH 2 69.000	8128.1
505511	CLRKSVL2 69.000	6722.6	505586	RSK3&4 1 13.800	26151.9
505512	DAR3&4 1 13.800	32792.2	505588	STIGLER5 161.00	6571.6
505513	CLK X1 1 12.470	6766.4	515317	PENDER 2 69.000	6710.3
505514	CLARKSV5 161.00	7933.5	515319	LSPADRA5 161.00	7819.1
505515	CLK X2 1 12.470	6766.4	515320	LSPADRA2 69.000	7593.1
505516	OZARK H5 161.00	11607.3	515322	COALHIL2 69.000	6026.8
515314	GRANDPR5 161.00	7539.4	515324	AVECOZK2 69.000	9165.5
505518	OZK1&2 1 13.800	25392.4	515325	HELBERG2 69.000	9868.6
507183	BOONVIL2 69.000	5476.8	515327	HELBERG5 161.00	10209.7

4 CONCLUSIONS

Southwest Power Pool (SPP) has commissioned ABB Inc., to perform a Definitive Impact Study for DISIS-2015-001 (Group 12) which includes generation interconnection request GEN-2015-019 (60 MW combustion-turbine generator connected at the Fitzhugh 161 kV substation).

The objective of this study is to evaluate the impact of project GEN-2015-019 on system stability and short-circuit performance. The study is performed on three system scenarios provided by SPP:

- 2015 Summer Peak Case
- 2015 Winter Peak Case
- 2025 Summer Peak Case

Results of the stability analysis show that the studied system is stable following all simulated faults with the proposed GEN-2015-019 project in-service. There are no voltage violations in the monitored area and the studied generator shows good damping performance which meets the criteria specified.

System short-circuit current levels at up to five buses away from the point of interconnection were calculated and tabulated for SPP's reference.

Based on the results of stability analysis it can be concluded that **the proposed GEN-2015-019 project does not adversely impact the stability of the SPP system**.

The results of this analysis are based on available data and assumptions made at the time of conducting this study. If any of the data and/or assumptions made in developing the study model change, the results provided in this report may not apply.

APPENDIX A SOUTHWEST POWER POOL DISTURBANCE PERFORMANCE CRITERIA REQUIREMENTS

OVERVIEW

These Disturbance Performance Requirements ("Requirements") shall be applicable to the Bulk Electric System within the Southwest Power Pool Planning Area. Utilization of these Requirements applies to all registered entities within the Southwest Power Pool Planning Area. These Requirements shall not be applicable to facilities that are not part of Bulk Electric System. More stringent Requirements are at the sole discretion of each Transmission Owner.

Transient and dynamic stability assessments are generally performed to assure adequate avoidance of loss of generator synchronism and prevention of system voltage collapse within the first 20 seconds after a system disturbance. These Requirements provide a basis for evaluating the system response during the initial transient period following a disturbance on the Bulk Electric System by establishing minimum requirements for machine rotor angle damping and transient voltage recovery.

ROTOR ANGLE DAMPING REQUIREMENT

Machine Rotor Angles shall exhibit well damped angular oscillations [as defined below] and acceptable power swings following a disturbance on the Bulk Electric System for all NERC Category A, B and C events.

Well damped angular oscillations shall meet one of the following two requirements when calculated directly from the rotor angle:

1. Successive Positive Peak Ratio (SPPR) must be less than or equal to 0.95 where SPPR is calculated as follows:

$$\text{SPPR} = \frac{\text{Peak Rotor Angle of 2}^{\text{nd}}\text{ Positive Swing Peak}}{\text{Peak Rotor Angle of 1}^{\text{st}}\text{ Positive Swing Peak}} \leq 0.95$$

-or- Damping Factor % = (1 – SPPR) x 100% ≥ 5%

The machine rotor angle damping ratio may be determined by appropriate modal analysis (i.e. Prony Analysis) where the following equivalent requirement must be met:

Damping Ratio ≥ 0.0081633

2. Successive Positive Peak Ratio Five (SPPR5) must be less than or equal to 0.774 where SPPR5 is calculated as follows:

$$\text{SPPR5} = \frac{\text{Peak Rotor Angle of 5}^{th}\text{ Positive Swing Peak}}{\text{Peak Rotor Angle of 1}^{st}\text{ Positive Swing Peak}} \leq 0.774$$

-or- Damping Factor % = (1 – SPPR5) x 100% $\geq$ 22.6%

The machine rotor angle damping ratio may be determined by appropriate modal analysis (i.e. Prony Analysis) where the following equivalent requirement must be met:

Damping Ratio $\geq$ 0.0081633

Qualitatively, these Requirements are shown in Figure 1 below.

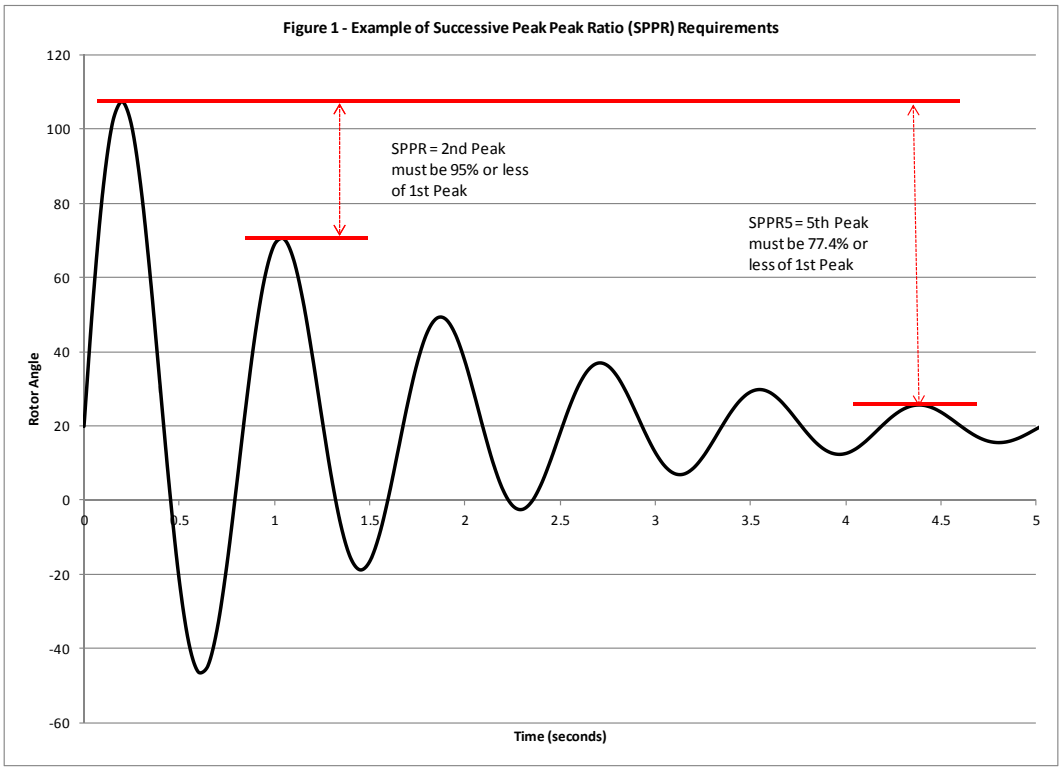

TRANSIENT VOLTAGE RECOVERY REQUIREMENT

Any time after a disturbance is cleared; bus voltages on the Bulk Electric System shall not swing outside of the bandwidth of 0.70 per unit to 1.20 per unit.

Qualitatively, this Requirement is shown in Figure 2 below.

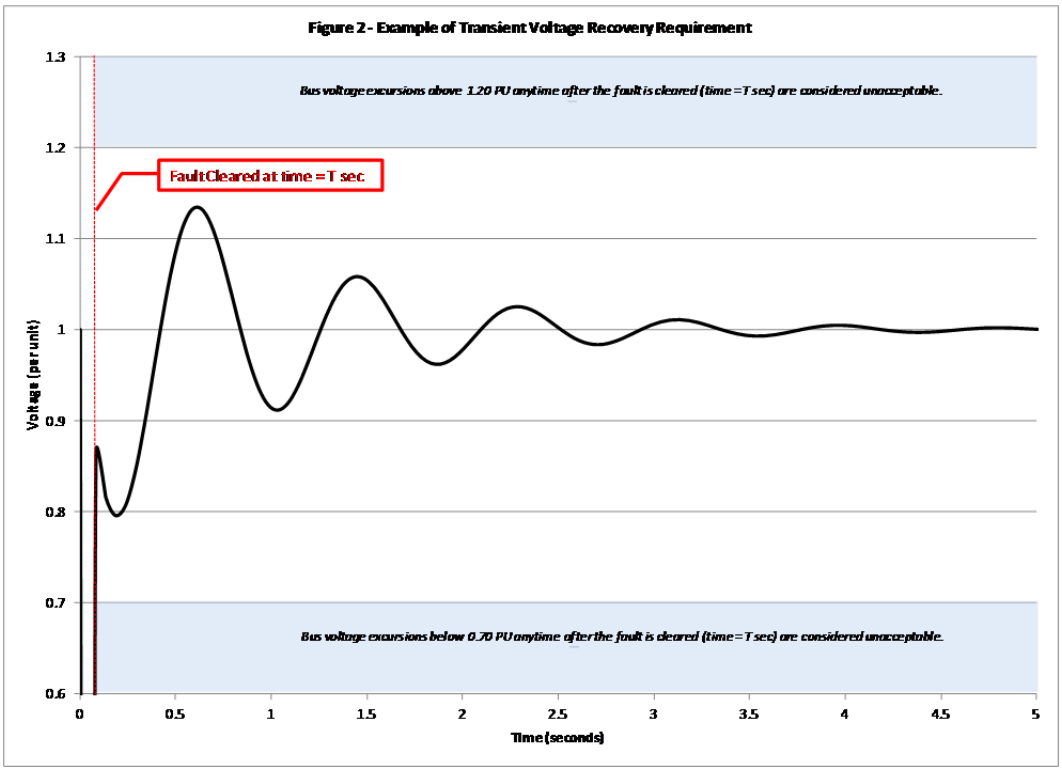
Figure 2 - Example of Transient Voltage Recovery Requirement
Bus voltage excursions above 1.20 PU anytime after the fault is cleared (time = T sec) are considered unacceptable.
Fault Cleared at time = T sec
Bus voltage excursions below 0.70 PU anytime after the fault is cleared (time = T sec) are considered unacceptable.
Voltage (per unit)
1.3
1.2
1.1
1
0.9
0.8
0.7
0.6
0
0.5
1
1.5
2
2.5
3
3.5
4
4.5
5
Time (seconds)

APPENDIX B SIMULATION PLOTS FOR STABILITY ANALYSIS

T: Group 13 Dynamic Stability Analysis Report

See Power-tek study report on next page

Southwestern Power Pool Inc. (SPP)

Definitive Impact Study
DISIS-2015-001 (Group 13)

Final Report Submitted to
Southwest Power Pool Inc.
July 2015

POWER-tek Global Inc.
Mississauga, Ontario, L4Z 1H8 Canada
647 300 3160
info@powertek-usa.com, www.powertek-usa.com

TABLE OF CONTENTS

1. Executive Summary **1**
2. Introduction **2**
2.1. Project Overview and Assumptions 2
2.2. Objectives 3
2.3. Models and Simulations Tools Used 3
3. Power Factor Analysis **5**
3.1. Methodology 5
3.2. Analysis 5
3.3. Conclusions 11
4. Inductive Reactive Support Analysis **11**
5. Short Circuit Analysis **13**
5.1. Short Circuit Result for POI (a tap on the Nebraska City-Sibley 345kV) 13
6. Stability Analysis for Cluster Scenario **19**
6.1. Faults Simulated 19
6.2. Simulation Results for Cluster Scenario 30
7. Conclusions **31**
8. Appendix A: 2015 Summer Peak Case Stability Run Plots – Cluster **32**
9. Appendix B: 2015 Winter Peak Case Stability Run Plots – Cluster **32**
10. Appendix C: 2025 Summer Peak Case Stability Run Plots – Cluster **32**
11. Appendix D: Project Model Data **32**

1. Executive Summary

The DISIS-2015-001 (Group 13) Impact Study is a generation interconnection study performed by POWER-tek Global Inc. for Southwest Power Pool (SPP). This report presents the results of impact study comprising of power factor, short circuit, and stability analyses for cluster scenarios of the proposed interconnection projects under DISIS-2015-001 (Group 13) ("The Projects") as described in Table 1.1 below:

Table 1.1: Interconnection Request

Request	Size (MW)	Generator Model	Point of Interconnection (POI)
GEN-2015-005	200.1	GE 1.79MW (9 wind turbines) and GE 2.0MW (92 wind turbines)	Tap on the Nebraska City-Sibley 345kV (bus 560028)

Power factor analysis, short circuit analysis up to 5 Buses away from the point of interconnection (POI), and transient stability simulations were performed for the Projects in service at its full output. SPP provided three base cases for Summer-2015, Winter-2015, and Summer-2025, each comprising of a power flow, sequence data and corresponding dynamics database. The previous queued request projects were already modeled in the base cases. The power factor analysis consists of running all N-1, three phase contingencies shown in the Fault Definitions table (Table 3 in the RFP) in power flow to advise the necessary power factor at the POI for each contingency.

The power factor analysis indicates that interconnection request i.e., GEN-2015-005 is required to provide reactive power as indicated in Tables 3.2.2 through 3.2.4.

Per the SPP OATT, the Interconnection Customer will be required to provide 95% lagging (supplying vars) and 95% leading (absorbing vars) at the POI.

To offset the capacitive effects of the collector system and transmission line of the wind farm under low wind or no wind conditions, the inductive reactive support analysis was performed for summer-2015 scenario. The analysis indicates that at POI (a tap on the Nebraska City-Sibley 345kV) 8.5 MVAR reactor is required at Bus 560028 to maintain zero MVAR flow for GEN-2015-005 generator lead.

The short circuit analysis is performed on the power flow models for the 2025 summer peak season for cluster scenario model. The results are documented for both 3 phase fault as well as single line to ground fault up to 5 buses away from the POI (a tap on the Nebraska City-Sibley 345kV).

There are no impacts on the stability performance of the SPP system during cluster scenario for the contingencies tested on the provided base cases. The study machines stayed on-line and stable for all simulated faults. The Project stability simulations with fifty four (54) specified test disturbances did not show instability problems in the SPP system. Any oscillations were damped out.

2. Introduction

2.1. Project Overview and Assumptions

The DISIS-2015-001 (Group 13) Impact Study is a generation interconnection study performed by POWER-tek Global Inc. for SPP. This report presents the results of impact study comprising of power factor, short circuit analysis, and stability analyses for both cluster and stand-alone scenarios of the proposed interconnection projects under DISIS-2015-001 (Group 13) ("The Projects") as described in Table 2.1.1 below:

Table 2.1.1: Interconnection requests

Request	Size (MW)	Wind Turbine Model	Point of Interconnection
GEN-2015-005	200.1	GE 1.79MW (9 wind turbines) and GE 2.0MW (92 wind turbines)	Tap on the Nebraska City-Sibley 345kV (bus 560028)

Figure 2.1.1 show the single line diagram for the interconnection of the Project to present and planned system of SPP. This arrangement was modeled and studied in power flow cases for these projects.

Figure 2.1.1: Power flow single line diagram for GEN-2015-005 and surrounding system components

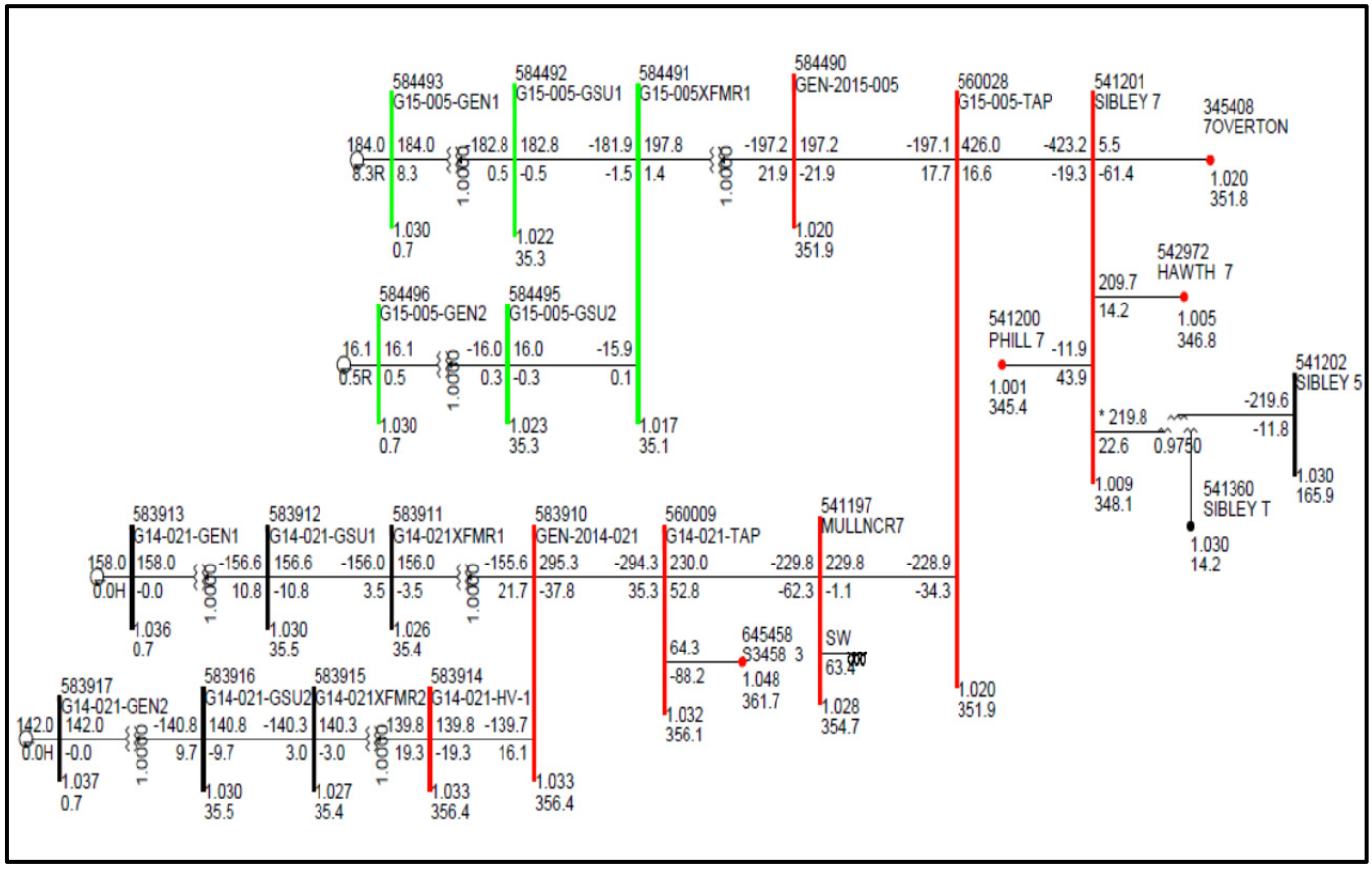

Appendix-D contains the machines, interconnection, and machines user model parameters.

Table 2.1.2 below shows the list of prior queued projects modeled in the base case.

Table 2.1.2: List of previous queued request projects

Request	Size (MW)	Wind Turbine Model	Point of Interconnection
GEN-2008-129	641/675	Combined Cycle (541163/541164)	Pleasant Hill 161kV (541225)
GEN-2010-036	4.6	GENROU (533264)	6th Street 115kV (533264)
GEN-2011-011	900.0	GENROU (542962)	Iatan 345kV (542982)
ASGI-2013-007	90.0	GE 2.5MW (562454)	Tap Hickory Creek (300087) – Locust Creek (300094) 161kV (562450)
GEN-2014-021	300.0	Vestas V110 2.0MW (583913,583917)	Tap Nebraska City/S3458 (645458) to Mullins Creek (541197) 345kV (560009)
GEN-2014-051	174.0	GE 2.0MW (584013)	JEC N 345kV (532766)

ATC (Available Transfer Capability) studies were not performed as part of this study. These studies will be required at the time transmission service is actually requested. Additional transmission upgrades may be required based on that analysis.

Study assumptions in general have been based on the specific information and data provided by SPP. The accuracy of the conclusions contained within this study is dependent on the assumptions made with respect to other generation additions and transmission improvements planned by other entities. Changes in the assumptions of the timing of other generation additions or transmission improvements may affect this study's conclusions.

2.2. Objectives

The objectives of the study are to conduct power factor analysis and to determine the impact on system stability of interconnecting the proposed wind farms to SPP's transmission system.

2.3. Models and Simulations Tools Used

Version 32 of the Siemens, PSS/E™ power system simulation program was used in this study.

SPP provided its latest stability database cases for summer-2015, winter-2015, and summer-2025 peak seasons. The Project's PSS/E model had been developed prior to this study and was included in the power flow case and the dynamics database. Machines, interconnection and dynamic model data for the Project plants is provided in Appendix D.

Power flow single line diagram of the project in summer 2015 peak condition is shown in Figure 2.1.1. This Figure shows that wind farms model includes representation of the radial transmission line, the substation transformer from transmission voltage (138kV and 345kV) to 34.5V. The remainder of each wind farm is represented by lumped equivalents including a generator, a step-up transformer, and collector system impedance.

No special modeling is required of line relays in these cases, except for the special modeling related to the wind-turbine tripping.

All generators in Areas 536, 540, 541, 542, 544, 545, 545, 640, 645, 650, 652, 635, 330, and 356 were monitored.

3. Power Factor Analysis

3.1. Methodology

Power factor analysis was conducted for the Project using the following methodology:

1. Replace the wind farm by a generator at the high side bus 345 kV, 138 kV, 115kV, or 69 kV bus, as applicable, with the MW of the wind farms at that point of interconnection.
2. Turn off the wind farm as modeled (as well as previous queued projects at the same point of interconnection).
3. Model a var generator at the Project's high voltage side, 345 kV, 138 kV, 115kV, or 69kV bus, as applicable. The var generator is set to hold a voltage schedule at the POI consistent with the voltage schedule in the provided power flow cases for summer and winter or 1.0 pu voltage, whichever is higher.
4. Perform the steady state contingency analysis to determine the power factor necessary at the POI for each contingency.
5. If the required power factor at the POI is beyond the capability of the studied wind turbines to meet (at the POI) capacitor banks may be considered for the stability analysis. The preference is to locate the capacitance banks on the 34.5 kV customer side. Factors to sizing capacitor banks include:
   - 5.1. The ability of the wind farm to meet FERC Order 661A (low voltage ride through) with and without capacitor banks.
   - 5.2. The ability of the wind farm to meet FERC Order 661A (wind farm recovery to pre-fault voltage).
   - 5.3. If wind farms trips on high voltage, power factor lower than unity may be required.

3.2. Analysis

Analysis was performed for the proposed Projects with all prior queued projects in service. A var generator was modeled at the point of interconnection and was set to hold a voltage schedule at the POI consistent with the voltage schedule in the provided power flow cases OR 1 p.u. whichever is higher. The voltages for these Projects are summarized in Table 3.2.1. All upgrades and instructions were made in the base cases. No other changes were made in the base cases provided, other than the addition of the var generators. Contingency analysis was run for provided list of contingencies.

Table 3.2.1: POI voltages for the summer and winter peak cases

Request	Point of Interconnection	Size (MW)	Base Case Voltage (p.u.)		
			Summer 2015 Peak	Winter 2015 Peak	Summer 2025 Peak
GEN-2015-005	Tap on the Nebraska City-Sibley 345kV	200.1	1.02	1.026	1.022

The details of the var requirement during contingencies are highlighted in Table 3.2.2, 3.2.3 and 3.2.4. The highest and the lowest values obtained are highlighted in these tables.

1. For 2015 summer case: The maximum var generator supply is 91.1 MVARs at 0.91 (lagging power factor) for the outage of 645458 [S3458 3 345.00] TO BUS 560009 [G14-021-TAP 345.00] CKT outage. The minimum var requirement is -39.8 MVAR at 0.98 (leading power factor) for outage of 560028 [G15-005-TAP 345.00] TO BUS 541201 [SIBLEY 7 345.00] CKT outage.

Table 3.2.2: Var Generator output in 2015 summer peak case for DISIS-2015-001 (Group 13)

2015 Summer Peak Case Power Factor Study:

Generation Interconnection Request Analysis Rated MW of Wind Farms OR at POI (MW) Rated MVAR of Wind Farms OR at POI (MVAR)						**GEN-2015-005** MW at POI **200.1** MVAR at POI **96.9**	
Cont. Name	**From Bus (# & Name)**		**To Bus (# & Name)**		**ID**	**MVAR at POI**	**P.F at POI**
	Base Case MVAR Flow				N/A	-18.0	1.0
FLT01-3PH	560028	G15-005-TAP 345.00	541201	SIBLEY 7 345.00	CKT 1	-39.8	0.98
FLT02-3PH	560028	G15-005-TAP 345.00	541197	MULLNCR7 345.00	CKT 1	12.9	1.00
FLT03-3PH	541201	SIBLEY 7 345.00	542972	HAWTH 7 345.00	CKT 1	-29.9	0.99
FLT04-3PH	541201	SIBLEY 7 345.00	541200	PHILL 7 345.00	CKT 1	-30.5	0.99
FLT05-3PH	541201	SIBLEY 7 345.00	345408	7OVERTON 345.00	CKT 1	-1.9	1.00
FLT06-3PH	345408	7OVERTON 345.00	345088	7MCCREDIE 345.00	CKT 1	-5.8	1.00
FLT07-3PH	541201	SIBLEY 7 345.00	541202	SIBLEY 5 161.00	T/F	-29.1	0.99
FLT08-3PH	541200	PHILL 7 345.00	541198	PECULR 7 345.00	CKT 1	-22.2	0.99
FLT09-3PH	542972	HAWTH 7 345.00	542973	HAWTHRN5 161.00	T/F	-21.5	0.99
FLT10-3PH	542982	IATAN 7 345.00	542980	NASHUA 7 345.00	CKT 1	-3.0	1.00
FLT11-3PH	542982	IATAN 7 345.00	541350	IATAN5 161.00	T/F	-15.0	1.00
FLT12-3PH	542982	IATAN 7 345.00	532772	STRANGR7 345.00	CKT 1	-16.0	1.00
FLT13-3PH	542982	IATAN 7 345.00	541400	EASTOWN7 345.00	CKT 1	-21.2	0.99
FLT14-3PH	640139	COOPER 3 345.00	541199	ST JOE 3 345.00	CKT 1	-6.4	1.00

Generation Interconnection Request Analysis Rated MW of Wind Farms OR at POI (MW) Rated MVAR of Wind Farms OR at POI (MVAR)						GEN-2015-005 MW at POI **200.1** MVAR at POI **96.9**	
Cont. Name	**From Bus (# & Name)**		**To Bus (# & Name)**		**ID**	**MVAR at POI**	**P.F at POI**
FLT15-3PH	640139	COOPER 3 345.00	300039	7FAIRPT 345.00	CKT 1	-9.0	1.00
FLT16-3PH	635017	ATCHSNT3 345.00	635630	BOONVIL3 345.00	CKT 1	-15.9	1.00
FLT17-3PH	640139	COOPER 3 345.00	640277	MOORE 3 345.00	CKT 1	-18.7	1.00
FLT18-3PH	645458	S3458 3 345.00	640139	COOPER 3 345.00	CKT 1	-10.7	1.00
FLT19-3PH	645458	S3458 3 345.00	645740	S3740 3 345.00	CKT 1	-15.5	1.00
FLT20-3PH	645458	S3458 3 345.00	650189	103&ROKEBY3 345.00	CKT 1	-13.0	1.00
FLT21-3PH	645458	S3458 3 345.00	645456	S3456 3 345.00	CKT 1	-16.4	1.00
FLT22-3PH	645458	S3458 3 345.00	560009	G14-021-TAP 345.00	CKT 1	91.1	0.91
FLT23-3PH	645740	S3740 3 345.00	645455	S3455 3 345.00	CKT 1	-15.7	1.00
FLT24-3PH	635590	FALLOW 3 345.00	635600	GRIMES 3 345.00	CKT 1	-14.9	1.00
FLT25-3PH	645456	S3456 3 345.00	635000	CBLUFFS3 345.00	CKT 1	-20.9	0.99

2. For 2015 winter case: The maximum var generator supply is 90.4 MVARs at 0.91 (lagging power factor) for the outage of 645458 [S3458 3 345.00] TO BUS 560009 [G14-021-TAP 345.00] CKT outage. The minimum var requirement is -40.3 MVAR at 0.98 (leading power factor) for outage of 541201 [SIBLEY 7 345.00] TO BUS 541200 [PHILL 7 345.00] CKT outage.

Table 3.2.3: Var generator output in 2015 winter peak case for DISIS-2015-001 (Group 13)

2015 Winter Peak Case Power Factor Study:

Generation Interconnection Request Analysis Rated MW of Wind Farms OR at POI (MW) Rated MVAR of Wind Farms OR at POI (MVAR)						GEN-2015-005 MW at POI **200.1** MVAR at POI **96.9**	
Cont. Name	**From Bus (# & Name)**		**To Bus (# & Name)**		**ID**	**MVAR at POI**	**P.F at POI**
	Base Case MVAR Flow				N/A	-23.7	0.99
FLT01-3PH	560028	G15-005-TAP 345.00	541201	SIBLEY 7 345.00	CKT 1	-31.4	0.99

Generation Interconnection Request Analysis Rated MW of Wind Farms OR at POI (MW) Rated MVAR of Wind Farms OR at POI (MVAR)						GEN-2015-005 MW at POI **200.1** MVAR at POI **96.9**	
Cont. Name	**From Bus (# & Name)**		**To Bus (# & Name)**		**ID**	**MVAR at POI**	**P.F at POI**
FLT02-3PH	560028	G15-005-TAP 345.00	541197	MULLNCR7 345.00	CKT 1	13.3	1.00
FLT03-3PH	541201	SIBLEY 7 345.00	542972	HAWTH 7 345.00	CKT 1	-34.4	0.99
FLT04-3PH	541201	SIBLEY 7 345.00	541200	PHILL 7 345.00	CKT 1	-40.3	0.98
FLT05-3PH	541201	SIBLEY 7 345.00	345408	7OVERTON 345.00	CKT 1	-8.3	1.00
FLT06-3PH	345408	7OVERTON 345.00	345088	7MCCREDIE 345.00	CKT 1	-13.0	1.00
FLT07-3PH	541201	SIBLEY 7 345.00	541202	SIBLEY 5 161.00	T/F	-29.9	0.99
FLT08-3PH	541200	PHILL 7 345.00	541198	PECULR 7 345.00	CKT 1	-33.2	0.99
FLT09-3PH	542972	HAWTH 7 345.00	542973	HAWTHRN5 161.00	T/F	-25.3	0.99
FLT10-3PH	542982	IATAN 7 345.00	542980	NASHUA 7 345.00	CKT 1	-15.4	1.00
FLT11-3PH	542982	IATAN 7 345.00	541350	IATAN5 161.00	T/F	-21.5	0.99
FLT12-3PH	542982	IATAN 7 345.00	532772	STRANGR7 345.00	CKT 1	-24.0	0.99
FLT13-3PH	542982	IATAN 7 345.00	541400	EASTOWN7 345.00	CKT 1	-25.2	0.99
FLT14-3PH	640139	COOPER 3 345.00	541199	ST JOE 3 345.00	CKT 1	-18.5	1.00
FLT15-3PH	640139	COOPER 3 345.00	300039	7FAIRPT 345.00	CKT 1	-18.9	1.00
FLT16-3PH	635017	ATCHSNT3 345.00	635630	BOONVIL3 345.00	CKT 1	-21.1	0.99
FLT17-3PH	640139	COOPER 3 345.00	640277	MOORE 3 345.00	CKT 1	-23.7	0.99
FLT18-3PH	645458	S3458 3 345.00	640139	COOPER 3 345.00	CKT 1	-23.8	0.99
FLT19-3PH	645458	S3458 3 345.00	645740	S3740 3 345.00	CKT 1	-22.8	0.99
FLT20-3PH	645458	S3458 3 345.00	650189	103&ROKEBY3 345.00	CKT 1	-20.6	0.99
FLT21-3PH	645458	S3458 3 345.00	645456	S3456 3 345.00	CKT 1	-22.9	0.99
FLT22-3PH	645458	S3458 3 345.00	560009	G14-021-TAP 345.00	CKT 1	90.4	0.91
FLT23-3PH	645740	S3740 3 345.00	645455	S3455 3 345.00	CKT 1	-25.2	0.99

Generation Interconnection Request Analysis Rated MW of Wind Farms OR at POI (MW) Rated MVAR of Wind Farms OR at POI (MVAR)						GEN-2015-005 MW at POI **200.1** MVAR at POI **96.9**	
Cont. Name	**From Bus (# & Name)**		**To Bus (# & Name)**		**ID**	**MVAR at POI**	**P.F at POI**
FLT24-3PH	635590	FALLOW 3 345.00	635600	GRIMES 3 345.00	CKT 1	-20.9	0.99
FLT25-3PH	645456	S3456 3 345.00	635000	CBLUFFS3 345.00	CKT 1	-22.4	0.99

3. For 2015 summer case: The maximum var generator supply is 88.7 MVARs at 0.91 (lagging power factor) for the outage of 645458 [S3458 3 345.00] TO BUS 560009 [G14-021-TAP 345.00] CKT outage. The minimum var requirement is -38.2 MVAR at 0.98 (leading power factor) for outage of 560028 [G15-005-TAP 345.00] TO BUS 541201 [SIBLEY 7 345.00] CKT outage.

Table 3.2.3: Var generator output in 2025 summer peak case for DISIS-2015-001 (Group 13)
2025 Summer Peak Case Power Factor Study:

Generation Interconnection Request Analysis Rated MW of Wind Farms OR at POI (MW) Rated MVAR of Wind Farms OR at POI (MVAR)						GEN-2015-005 MW at POI **200.1** MVAR at POI **96.9**	
Cont. Name	**From Bus (# & Name)**		**To Bus (# & Name)**		**ID**	**MVAR at POI**	**P.F at POI**
	Base Case MVAR Flow				N/A	-20.6	0.99
FLT01-3PH	560028	G15-005-TAP 345.00	541201	SIBLEY 7 345.00	CKT 1	-38.2	0.98
FLT02-3PH	560028	G15-005-TAP 345.00	541197	MULLNCR7 345.00	CKT 1	10.9	1.00
FLT03-3PH	541201	SIBLEY 7 345.00	542972	HAWTH 7 345.00	CKT 1	-28.6	0.99
FLT04-3PH	541201	SIBLEY 7 345.00	541200	PHILL 7 345.00	CKT 1	-33.4	0.99
FLT05-3PH	541201	SIBLEY 7 345.00	345408	7OVERTON 345.00	CKT 1	-7.6	1.00
FLT06-3PH	345408	7OVERTON 345.00	345088	7MCCREDIE 345.00	CKT 1	-7.7	1.00
FLT07-3PH	541201	SIBLEY 7 345.00	541202	SIBLEY 5 161.00	T/F	-30.0	0.99
FLT08-3PH	541200	PHILL 7 345.00	541198	PECULR 7 345.00	CKT 1	-25.6	0.99
FLT09-3PH	542972	HAWTH 7 345.00	542973	HAWTHRN5 161.00	T/F	-23.2	0.99
FLT10-3PH	542982	IATAN 7 345.00	542980	NASHUA 7 345.00	CKT 1	-7.3	1.00

Generation Interconnection Request Analysis Rated MW of Wind Farms OR at POI (MW) Rated MVAR of Wind Farms OR at POI (MVAR)						GEN-2015-005 MW at POI **200.1** MVAR at POI **96.9**	
Cont. Name	**From Bus (# & Name)**		**To Bus (# & Name)**		**ID**	**MVAR at POI**	**P.F at POI**
FLT11-3PH	542982	IATAN 7 345.00	541350	IATAN5 161.00	T/F	-17.4	1.00
FLT12-3PH	542982	IATAN 7 345.00	532772	STRANGR7 345.00	CKT 1	-16.8	1.00
FLT13-3PH	542982	IATAN 7 345.00	541400	EASTOWN7 345.00	CKT 1	-23.4	0.99
FLT14-3PH	640139	COOPER 3 345.00	541199	ST JOE 3 345.00	CKT 1	-10.1	1.00
FLT15-3PH	640139	COOPER 3 345.00	300039	7FAIRPT 345.00	CKT 1	-11.8	1.00
FLT16-3PH	635017	ATCHSNT3 345.00	635630	BOONVIL3 345.00	CKT 1	-17.6	1.00
FLT17-3PH	640139	COOPER 3 345.00	640277	MOORE 3 345.00	CKT 1	-21.0	0.99
FLT18-3PH	645458	S3458 3 345.00	640139	COOPER 3 345.00	CKT 1	-13.7	1.00
FLT19-3PH	645458	S3458 3 345.00	645740	S3740 3 345.00	CKT 1	-18.4	1.00
FLT20-3PH	645458	S3458 3 345.00	650189	103&ROKEBY3 345.00	CKT 1	-16.1	1.00
FLT21-3PH	645458	S3458 3 345.00	645456	S3456 3 345.00	CKT 1	-19.4	1.00
FLT22-3PH	645458	S3458 3 345.00	560009	G14-021-TAP 345.00	CKT 1	88.7	0.91
FLT23-3PH	645740	S3740 3 345.00	645455	S3455 3 345.00	CKT 1	-13.3	1.00
FLT24-3PH	635590	FALLOW 3 345.00	635600	GRIMES 3 345.00	CKT 1	-17.5	1.00
FLT25-3PH	645456	S3456 3 345.00	635000	CBLUFFS3 345.00	CKT 1	-19.6	1.00

3.3. Conclusions

The power factor analysis indicates the DISIS-2015-001 (Group 13) interconnection request i.e., GEN-2015-005 is required to maintain the SPP standard power factor at the point of interconnection i.e., (Nebraska City-Sibley 345kV) based on the contingencies studied.

Per the SPP OATT, the Interconnection Customer will be required to provide 95% lagging (supplying vars) and 95% leading (absorbing vars) at the POI.

4. Inductive Reactive Support Analysis

Analysis for low wind /no wind conditions in cluster scenario is performed for the proposed wind generators requests. To offset the capacitive effects of the collector system and transmission line of the wind farm under low wind or no wind conditions, analysis was performed for summer 2015 scenario to calculate the Inductive Reactive Support at point of interconnection for each interconnection request under project DISIS-2015-001 (Group 13) .

Following methodology was adopted as communicated by SPP:

1. Switch the generator and capacitor bank (if installed) out of service with the collector system as modeled remaining in service.
2. Calculate the amount of inductive reactive support required at the 34.5kV collector buses which would result in zero VAR flow at the POI."

The inductive reactive support analysis for wind generator GEN-2015-005 performed for summer 2015 scenario which indicates that at POI (a tap on the Nebraska City-Sibley 345kV) 8.5 MVAR reactor is required at Bus 560028 to maintain zero MVAR flow for GEN-2015-005 generator lead.

Maintaining zero MVar flow at the POI at all times is not possible with static reactor banks. It will be determined on a case by case basis for each generator as to whether additional reactor banks are required for low wind conditions.

The single line diagram for wind generators showing the inductive reactive requirement for Gen-2015-005 is shown in Figure 4.1.1:

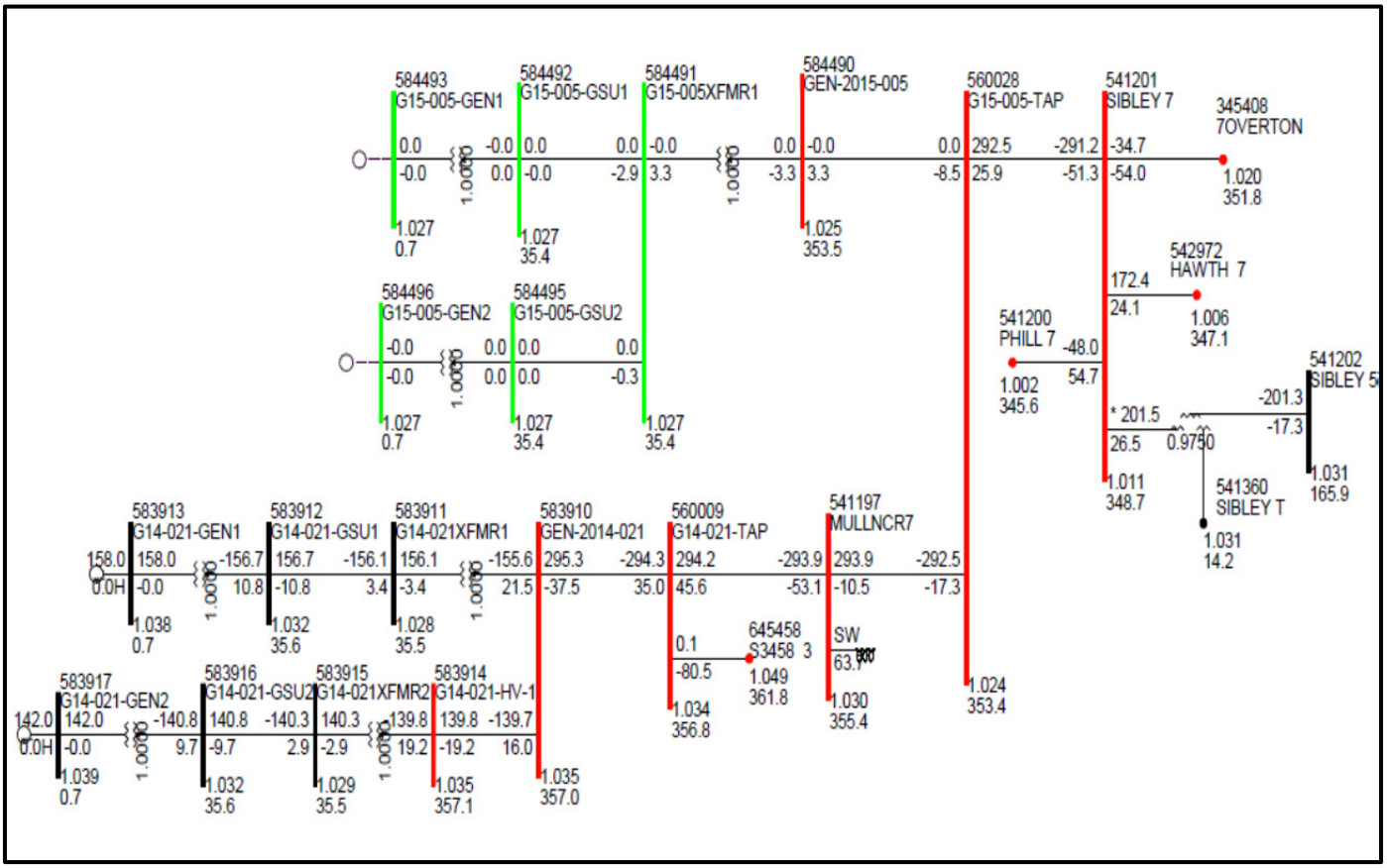

Figure 4.1.1: Inductive reactive requirement for GEN-2015-005

5. Short Circuit Analysis

The short circuit analysis out five buses away was performed for 2025 summer peak case for each interconnection request under project cluster scenario of DISIS-2015-001 (Group 13). No outage was assumed in the system model.

5.1. Short Circuit Result for POI (Tap on the Nebraska City-Sibley 345kV, bus number 560028)

The results of the short circuit analysis for POI i.e., a tap on the Nebraska City-Sibley 345kV (BUS # 560028) are tabulated below in table 5.1.1.

Table 5.1.1: Short circuit results for the POI, a tap on Nebraska City-Sibley 345kV (BUS # 560028)

Bus #	Bus Name	Level Away	Fault Current (Amperes)	
			3 PH	SLG
560028	G15-005-TAP 345.00	0 level	8180.8	5052.7
541197	MULLNCR7 345.00	1 Level	5739.5	3664.2
541201	SIBLEY 7 345.00	1 Level	10061.6	6356.9
584490	GEN-2015-005345.00	1 Level	936.8	714.6
345408	7OVERTON 345.00	2 Level	1783.2	1209.5
541200	PHILL 7 345.00	2 Level	2836.1	1727.4
541202	SIBLEY 5 161.00	2 Level	3938	2976
541360	SIBLEY T 13.800	2 Level	0	0
542972	HAWTH 7 345.00	2 Level	4304	2904
560009	G14-021-TAP 345.00	2 Level	5889	3916.3
584491	G15-005XFMR134.500	2 Level	9367.4	7145.6
345088	7MCCREDIE 345.00	3 Level	1388.9	1069.1
345409	5OVERTON 161.00	3 Level	2124.8	2152.3
541198	PECULR 7 345.00	3 Level	2273.3	1353
541225	PHILL 5 161.00	3 Level	3995.7	3741
541250	SIBLEYPL 161.00	3 Level	4763.9	4318.2
541361	PHILL T 13.800	3 Level	0	0
542973	HAWTHRN5 161.00	3 Level	9481.7	8670.9
542980	NASHUA 7 345.00	3 Level	3375.5	2905.1
543644	HAWT T20 13.800	3 Level	0	0

Bus #	Bus Name	Level Away	Fault Current (Amperes)	
			3 PH	SLG
543645	HAWT T22 13.800	3 Level	0	0
583910	GEN-2014-021345.00	3 Level	1372.1	1043.6
584492	G15-005-GSU134.500	3 Level	8601.4	6546
584495	G15-005-GSU234.500	3 Level	747	569.6
645458	S3458 3 345.00	3 Level	6702.2	5527.4
300044	7MCCRED 345.00	4 Level	920.4	838.8
300500	5HUNTSDL 161.00	4 Level	560.5	552.9
345221	5MOBERLY 161.00	4 Level	1371.9	1366.1
345230	7MONTGMRY 345.00	4 Level	3315.7	3235.4
345411	5OVERTON 2 161.00	4 Level	1427.3	1455.6
541151	SIBLEY#3 22.000	4 Level	16880.8	13052.2
541162	DOGWDSTG 18.000	4 Level	10957.8	10126.6
541163	DOGWDCT1 18.000	4 Level	8147.4	7307
541164	DOGWDCT2 18.000	4 Level	8195.6	7322.6
541199	ST JOE 3 345.00	4 Level	1635.3	1500
541235	DUNCAN 5 161.00	4 Level	989.4	945.7
541239	HSNVL 5 161.00	4 Level	535.5	433.3
541243	LKWINGB5 161.00	4 Level	1359.5	1440.3
541244	ORRICK 5 161.00	4 Level	476.1	482.3
541263	SIBLEY 2 69.000	4 Level	1826.5	1571.9
541280	PHILL 2 69.000	4 Level	774.6	829.6
541313	HARRIS 161.00	4 Level	1243.4	1275.5
541342	PECULR 5 161.00	4 Level	1539.4	1384.6
541346	RTCHFLD5 161.00	4 Level	357.9	283.6
541372	PECULRT 13.800	4 Level	0	0
542951	HAW G5 1 22.000	4 Level	31860.8	29046.4
542961	HAWCT6 1 16.000	4 Level	10144	9085.6
542967	HAW G9 1 13.800	4 Level	10689	9810
542968	STILWEL7 345.00	4 Level	3702	3123.1

Bus #	Bus Name	Level Away	Fault Current (Amperes)	
			3 PH	SLG
542976	LEVEE 5 161.00	4 Level	1808.7	1736.5
542982	IATAN 7 345.00	4 Level	4851.5	4737.8
542997	LEEDS 5 161.00	4 Level	1868	1941.2
543000	BLUEVLY5 161.00	4 Level	826.2	867.6
543011	CHOUTEU5 161.00	4 Level	1521.5	1581.6
543020	BRMGHAM5 161.00	4 Level	463.8	465.4
543027	RANDLPH5 161.00	4 Level	1252.5	1305
543028	NASHUA-5 161.00	4 Level	2277	2523.2
543080	HAWTH 2 69.000	4 Level	321.9	370.1
543640	NASH T11 13.800	4 Level	0	0
548808	ECKLES-161 161.00	4 Level	1128.8	958.3
548814	SUB M-161 161.00	4 Level	630.1	581.9
583911	G14-021XFMR134.500	4 Level	7225	5486.6
583914	G14-021-HV-1345.00	4 Level	644.4	491.6
584493	G15-005-GEN10.6900	4 Level	30069.4	127299.4
584496	G15-005-GEN20.6900	4 Level	37349.6	28481.2
640139	COOPER 3 345.00	4 Level	3474.1	3343
645011	NEBCTY1G 18.000	4 Level	41324.8	40299.4
645012	NEBCTY2G 23.000	4 Level	35775.5	34500.2
645456	S3456 3 345.00	4 Level	2938.5	2776
645740	S3740 3 345.00	4 Level	2211.9	2090.6
650189	103&ROKEBY3 345.00	4 Level	1392.9	1254.7
300039	7FAIRPT 345.00	5 Level	855	843.7
300043	7KINGDM 345.00	5 Level	709.4	726.2
300049	7THOMHL 345.00	5 Level	2235.5	2248.5
300052	7ENON 345.00	5 Level	1293.6	1343.9
300098	5MOCITY 161.00	5 Level	659.4	726.5
300126	5MOBTAP 161.00	5 Level	1462.9	1445.2
300320	5LEVASY 161.00	5 Level	398.1	173.1

Bus #	Bus Name	Level Away	Fault Current (Amperes)	
			3 PH	SLG
300709	2SHARSNV 69.000	5 Level	482.9	510.2
343004	5PERCHE 161.00	5 Level	623	583.1
344224	7CALAWY 1 345.00	5 Level	3876.1	3873.3
344233	5CALIF UE 161.00	5 Level	666.6	626.3
344886	7LABADIE3 345.00	5 Level	3539.7	3546.6
345071	5MCBAIN T 161.00	5 Level	382.8	352.5
345222	2MOBERLY 69.000	5 Level	1864.2	1901.2
345231	5MONTGMRY 161.00	5 Level	1677.6	1692.5
345992	7SPENCER 345.00	5 Level	1480.3	1465.7
532772	STRANGR7 345.00	5 Level	3032.1	3147.1
541150	IATAN 11 13.800	5 Level	0	0
541152	SIBLEY#2 13.200	5 Level	4760	4158.4
541153	SIBLEY#1 13.200	5 Level	4598.8	4103
541203	NASHUA 5 161.00	5 Level	495.6	428.9
541205	BLSPE 5 161.00	5 Level	1288.9	1248.8
541207	ARCHIE 5 161.00	5 Level	999.7	892.2
541215	HLLMRK 5 161.00	5 Level	435.2	332.4
541218	GRNWD 5 161.00	5 Level	1206.8	1291
541230	RNRIDGE5 161.00	5 Level	1502.6	1654.5
541236	RICHMND5 161.00	5 Level	476	475.5
541241	SEDEAST5 161.00	5 Level	456.8	477.8
541248	LBRTYST5 161.00	5 Level	392.3	380.6
541249	HOOKRD 5 161.00	5 Level	1216.8	1287.8
541253	ST JOE 5 161.00	5 Level	1419.9	1438.5
541262	LIBERTY2 69.000	5 Level	530.1	561.4
541279	RGREEN 2 69.000	5 Level	740	792.6
541295	HSNVL 2 69.000	5 Level	503.1	524.2
541340	BELTONS5 161.00	5 Level	1267.1	1331.5
541344	PECULRS5 161.00	5 Level	994.1	791.1

Bus #	Bus Name	Level Away	Fault Current (Amperes)	
			3 PH	SLG
541347	RAYMORE 69.000	5 Level	401.8	423.9
541350	IATAN5 161.00	5 Level	1453.8	1477.6
541370	STJOE 1T 13.800	5 Level	0	0
541371	STJOE 2T 13.800	5 Level	0	0
541400	EASTOWN7 345.00	5 Level	1086.8	1076.3
542957	IAT G1 1 24.000	5 Level	30540.6	30084.2
542962	IAT G2 1 25.000	5 Level	36871.2	35787.2
542963	HAWCT7 1 13.800	5 Level	4404.6	3871
542964	HAWCT8 1 13.800	5 Level	5518.8	4546.8
542965	W.GRDNR7 345.00	5 Level	3397.5	3271.1
542969	STILWEL5 161.00	5 Level	4552.9	4716.6
542981	LACYGNE7 345.00	5 Level	5616.8	5530.6
542985	NEAST 5 161.00	5 Level	3351.2	3799.2
543004	BLUMILS5 161.00	5 Level	323.3	326
543009	WINJT N5 161.00	5 Level	490.3	508.9
543010	WINJT S5 161.00	5 Level	442	446.4
543015	AVONDAL5 161.00	5 Level	1161.5	1239.1
543023	CLAYCM25 161.00	5 Level	0	0
543029	SHOLCRK5 161.00	5 Level	943.9	1020
543062	SALSBRY5 161.00	5 Level	1431.3	1427.3
543091	DUNCNRD2 69.000	5 Level	125.6	147.6
543114	PLUMRRD2 69.000	5 Level	99.7	111.2
543639	LEEDREAC 161.00	5 Level	441.8	448.8
543647	STIL T11 13.800	5 Level	0	0
543648	STIL T22 13.800	5 Level	0	0
548803	SUB F 69.000	5 Level	367	392.5
548807	BLUVLY-161 161.00	5 Level	496.6	456.3
548815	SUB M 69.000	5 Level	816.1	905.8
548820	SUB N-161 161.00	5 Level	519	539

Bus #	Bus Name	Level Away	Fault Current (Amperes)	
			3 PH	SLG
583912	G14-021-GSU134.500	5 Level	7054.2	5379
583915	G14-021XFMR234.500	5 Level	6443	4916.4
635000	CBLUFFS3 345.00	5 Level	5065.9	4988.9
635017	ATCHSNT3 345.00	5 Level	1103.1	1095.4
640009	COOPER1G 22.000	5 Level	44580.9	45789.2
640140	COOPER 5 161.00	5 Level	808.1	824.4
640142	COOPER T2 913.800	5 Level	0	0
640277	MOORE 3 345.00	5 Level	1239.7	1157.9
643172	COOPER T5 913.800	5 Level	0	0
645041	CASS 1G 15.000	5 Level	12043.5	11598
645042	CASS 2G 15.000	5 Level	12058	11607.6
645043	CASS 3X 15.000	5 Level	12043.5	11598
645111	NBAXT1 9 4.2000	5 Level	5460.6	5661.8
645112	NBAXT2 9 4.2000	5 Level	5462	5663.4
645455	S3455 3 345.00	5 Level	2747.8	2774.9
645459	S3459 3 345.00	5 Level	1280.9	1247.3
646206	S1206 5 161.00	5 Level	4558.8	4570.3
648256	S3456T49 13.800	5 Level	0	0
650185	WAGENER 3 345.00	5 Level	1259.8	1229.4

6. Stability Analysis for Cluster Scenario

6.1. Faults Simulated

Fifty Four (54) faults were considered for the transient stability simulations which included three phase faults, as well as single phase line faults, at the locations defined by SPP in the RFP. Single-phase line faults were simulated by applying fault impedance to the positive sequence network at the fault location. As per the SPP current practice to compute the fault levels, the fault impedance was computed to give a positive sequence voltage at the specified fault location of approximately 60% of pre-fault voltage.

Concurrently and previously queued projects as respectively shown in Table-1 and Table-2 of the study request i.e., GEN-2008-129, GEN-2010-036, GEN-2011-011, ASGI-2013-007, GEN-2014-021, GEN-2014-051 as well as areas number 536, 540, 541, 542, 544, 545, 545, 640, 645, 650, 652, 635, 330, and 356 were monitored during all the simulations. Table 6.1.1 shows the list of simulated contingencies. This table also shows the fault clearing time and the time delay before re-closing for all the study contingencies.

Simulations were performed with a 0.1-second steady-state run followed by the appropriate disturbance as described in Table 6.1.1. Simulations were run for minimum 15-second duration to confirm proper machine damping.

Table 6.1.1 summarizes the overall results for all faults simulations of cluster scenario. Complete sets of plots for summer-2015, winter-2015, and summer-2025 peak seasons for each fault are included in Appendices A, B and C respectively.

Table 6.1.1: List of simulated faults for cluster scenario stability analysis

Cont. #	Contingency Name	Description	2015 Summer Results	2015 Winter Results	2025 Summer Results
1	FLT01-3PH	3 phase fault on the G15-005 TAP (560028) to Sibley (541201) 345kV line circuit 1, near G15-005 TAP. a. Apply fault at the G15-005 TAP 345kV bus. b. Clear fault after 5 cycles and trip the faulted line. c. Wait 20 cycles, and then re-close the line in (b) back into the fault. d. Leave fault on for 5 cycles, then trip the line in (b) and remove fault.	Stable	Stable	Stable
2	FLT02-3PH	3 phase fault on the G15-005 TAP (560028) to Mullin Creek (541197) 345kV line circuit 1, near G15-005 TAP. a. Apply fault at the G15-005 TAP 345kV bus. b. Clear fault after 5 cycles and trip the faulted line. c. Wait 20 cycles, and then re-close the line in (b) back into the fault. d. Leave fault on for 5 cycles, then trip the line in (b) and remove fault.	Stable	Stable	Stable
3	FLT03-3PH	3 phase fault on the Sibley (541201) to Hawthorne (542972) 345kV line circuit 1, near Sibley 345kV. a. Apply fault at the Sibley 345kV bus. b. Clear fault after 5 cycles and trip the faulted line. c. Wait 20 cycles, and then re-close the line in (b) back into the fault. d. Leave fault on for 5 cycles, then trip the line in (b) and remove fault.	Stable	Stable	Stable
4	FLT04-3PH	3 phase fault on the Sibley (541201) to Pleasant Hill (541200) 345kV line circuit 1, near Sibley. a. Apply fault at the Sibley 345kV bus. b. Clear fault after 5 cycles and trip the faulted line. c. Wait 20 cycles, and then re-close the line in (b) back into the fault. d. Leave fault on for 5 cycles, then trip the line in (b) and remove fault.	Stable	Stable	Stable
5	FLT05-3PH	3 phase fault on the Sibley (541201) to Overton (345408) 345kV line circuit 1, near Sibley. a. Apply fault at the Sibley 345kV bus. b. Clear fault after 5 cycles and trip the faulted line. c. Wait 20 cycles, and then re-close the line in (b) back into the fault. d. Leave fault on for 5 cycles, then trip the line in (b) and remove fault.	Stable	Stable	Stable

Cont. #	Contingency Name	Description	2015 Summer Results	2015 Winter Results	2025 Summer Results
6	FLT06-3PH	3 phase fault on the Overton (345408) to McCredie (345088) 345kV line circuit 1, near Overton. a. Apply fault at the Overton 345kV bus. b. Clear fault after 5 cycles and trip the faulted line. c. Wait 20 cycles, and then re-close the line in (b) back into the fault. d. Leave fault on for 5 cycles, then trip the line in (b) and remove fault.	Stable	Stable	Stable
7	FLT07-3PH	3 phase fault on the Sibley (541201) 345/(541202) 161/(541360) 13.8kV Transformer circuit 1, near Sibley 345kV. a. Apply fault at the Sibley 345kV bus. b. Clear fault after 5 cycles, trip the faulted line, and remove the fault.	Stable	Stable	Stable
8	FLT08-3PH	3 phase fault on the Pleasant Hill (541200) to Peculiar (541198) 345kV line circuit 1, near Pleasant Hill. a. Apply fault at the Pleasant Hill 345kV bus. b. Clear fault after 5 cycles and trip the faulted line. c. Wait 20 cycles, and then re-close the line in (b) back into the fault. d. Leave fault on for 5 cycles, then trip the line in (b) and remove fault.	Stable	Stable	Stable
9	FLT09-3PH	3 phase fault on the Hawthorne (542972) 345/(542973) 161/(543644) 13.8kV Transformer (Hawt 20) circuit 20, near Hawthorne 345kV. a. Apply fault at the Hawthorne 345kV bus. b. Clear fault after 5 cycles, trip the faulted line, and remove fault.	Stable	Stable	Stable
10	FLT10-3PH	3 phase fault on the Iatan (542982) to Nashua (542980) 345kV line circuit 1, near Iatan. a. Apply fault at the Iatan 345kV bus. b. Clear fault after 5 cycles and trip the faulted line. c. Wait 20 cycles, and then re-close the line in (b) back into the fault. d. Leave fault on for 5 cycles, then trip the line in (b) and remove fault.	Stable	Stable	Stable

Cont. #	Contingency Name	Description	2015 Summer Results	2015 Winter Results	2025 Summer Results
11	FLT11-3PH	3 phase fault on the Iatan (542982) 345/(541350) 161/(541150) 13.8kV Transformer (IATAN 11) circuit 11, near Iatan. a. Apply fault at the Hugo 345kV bus. b. Clear fault after 5 cycles and trip the faulted line. c. Wait 20 cycles, and then re-close the line in (b) back into the fault. d. Leave fault on for 5 cycles, then trip the line in (b) and remove fault.	Stable	Stable	Stable
12	FLT12-3PH	3 phase fault on the Iatan (542982) to Stranger (532772) 345kV line circuit 1, near Iatan. a. Apply fault at the Iatan 345kV bus. b. Clear fault after 5 cycles and trip the faulted line. c. Wait 20 cycles, and then re-close the line in (b) back into the fault. d. Leave fault on for 5 cycles, then trip the line in (b) and remove fault.	Stable	Stable	Stable
13	FLT13-3PH	3 phase fault on the Iatan (542982) to Eastown (541400) 345kV line circuit 1, near Iatan. a. Apply fault at the Iatan 345kV bus. b. Clear fault after 5 cycles and trip the faulted line. c. Wait 20 cycles, and then re-close the line in (b) back into the fault. d. Leave fault on for 5 cycles, then trip the line in (b) and remove fault.	Stable	Stable	Stable
14	FLT14-3PH	3 phase fault on the Cooper (640139) to St Joe (541199) 345kV line circuit 1, near Cooper. a. Apply fault at the Cooper 345kV bus. b. Clear fault after 5 cycles and trip the faulted line. c. Wait 20 cycles, and then re-close the line in (b) back into the fault. d. Leave fault on for 5 cycles, then trip the line in (b) and remove fault.	Stable	Stable	Stable
15	FLT15-3PH	3 phase fault on the Cooper (640139) to Fairport (300039) 345kV line circuit 1, near Cooper. a. Apply fault at the Cooper 345kV bus. b. Clear fault after 5 cycles and trip the faulted line. c. Wait 20 cycles, and then re-close the line in (b) back into the fault. d. Leave fault on for 5 cycles, then trip the line in (b) and remove fault.	Stable	Stable	Stable

Cont. #	Contingency Name	Description	2015 Summer Results	2015 Winter Results	2025 Summer Results
16	FLT16-3PH	3 phase fault on the Atchison Tap (635017) to Boonville (635630) 345kV line circuit 1, near Atchison Tap. a. Apply fault at the Atchison Tap 345kV bus. b. Clear fault after 5 cycles and trip the faulted line. c. Wait 20 cycles, and then re-close the line in (b) back into the fault. d. Leave fault on for 5 cycles, then trip the line in (b) and remove fault.	Stable	Stable	Stable
17	FLT17-3PH	3 phase fault on the Cooper (640139) to Moore (640277) 345kV line circuit 1, near Cooper. a. Apply fault at the Cooper 345kV bus. b. Clear fault after 5 cycles and trip the faulted line. c. Wait 20 cycles, and then re-close the line in (b) back into the fault. d. Leave fault on for 5 cycles, then trip the line in (b) and remove fault.	Stable	Stable	Stable
18	FLT18-3PH	3 phase fault on the Nebraska City/S3458 (645458) to Cooper (640139) 345kV line circuit 1, near Nebraska City/S3458. a. Apply fault at the Nebraska City/S3458 345kV bus. b. Clear fault after 4.5 cycles, trip the faulted line, and remove fault.	Stable	Stable	Stable
19	FLT19-3PH	3 phase fault on the Nebraska City/S3458 (645458) to Cass/S3740 (645740) 345kV line circuit 1, near Nebraska City/S3458. a. Apply fault at the Nebraska City/S3458 345kV bus. b. Clear fault after 4.5 cycles, trip the faulted line, and remove fault.	Stable	Stable	Stable
20	FLT20-3PH	3 phase fault on the Nebraska City/S3458 (645458) to 103&Rokeby (650189) 345kV line circuit 1, near Nebraska City/S3458. a. Apply fault at the Nebraska City/S3458 345kV bus. b. Clear fault after 4.5 cycles, trip the faulted line, and remove fault.	Stable	Stable	Stable
21	FLT21-3PH	3 phase fault on the Nebraska City/S3458 (645458) to Sarpy/S3456 (645456) 345kV line circuit 1, near Nebraska City/S3458. a. Apply fault at the Nebraska City/S3458 345kV bus. b. Clear fault after 4.5 cycles, trip the faulted line, and remove fault.	Stable	Stable	Stable

Cont. #	Contingency Name	Description	2015 Summer Results	2015 Winter Results	2025 Summer Results
22	FLT22-3PH	3 phase fault on the Nebraska City/S3458 (645458) to G14-021 TAP (560009) 345kV line circuit 1, near Nebraska City/S3458 345kV. a. Apply fault at the Nebraska City/S3458 345kV bus. b. Clear fault after 4.5 cycles, trip the faulted line, and remove fault.	Stable	Stable	Stable
23	FLT23-3PH	3 phase fault on the Cass/S3740 (645740) to S3455 (645455) 345kV line circuit 1, near Cass/S3740 345kV. a. Apply fault at the near Cass/S3740 345kV bus. b. Clear fault after 4.5 cycles, trip the faulted line, and remove fault.	Stable	Stable	Stable
24	FLT24-3PH	3 phase fault on the Fallow (635590) to Grimes (635600) 345kV line circuit 1, near Fallow 345kV. a. Apply fault at the Fallow 345kV bus. b. Clear fault after 5 cycles, trip the faulted line, and remove fault.	Stable	Stable	Stable
25	FLT25-3PH	3 phase fault on the Sarpy/S3456 (645456) to Council Bluffs (635000) 345kV line circuit 1, near Sarpy/S3456 345kV. a. Apply fault at the Sarpy/S3456 345kV bus. b. Clear fault after 5 cycles, trip the faulted line, and remove fault.	Stable	Stable	Stable
26	FLT26-3PH	**Sibley 345kV Stuck Breaker Scenario 1** a. Apply single phase fault at the Sibley (541201) 345kV bus. b. Wait 16 cycles and remove fault. c. Trip Sibley (541201) 345/(541202) 161/(541360) 13.8kV transformer circuit 1. d. Trip Sibley (541201) to Hawthorne (542972) 345kV line circuit 1.	Stable	Stable	Stable
27	FLT27-3PH	**Sibley 345kV Stuck Breaker Scenario 2** a. Apply single phase fault at the Sibley (541201) 345kV bus. b. Wait 16 cycles and remove fault. c. Trip Sibley (541201) to Pleasant Hill (541200) 345kV line circuit 1. d. Trip Sibley (541201) to Hawthorne (542972) 345kV line circuit 1.	Stable	Stable	Stable

Cont. #	Contingency Name	Description	2015 Summer Results	2015 Winter Results	2025 Summer Results
28	FLT28-3PH	**Sibley 345kV Stuck Breaker Scenario 3** a. Apply single phase fault at the Sibley (541201) 345kV bus. b. Wait 16 cycles and remove fault. c. Trip Sibley (541201) to Pleasant Hill (541200) 345kV line circuit 1. d. Trip Sibley (541201) to Overton (345408) 345kV line circuit 1.	Stable	Stable	Stable
29	FLT29-SB	**Nebraska City/S3458 345kV Stuck Breaker Scenario 1** a. Apply single phase fault at the Nebraska City/S3458 (645458) end of the Nebraska City/S3458 to Cooper (640139) 345kV line. b. After 4.5 cycles, open remote end of faulted line. c. Wait 9 cycles, remove fault and trip faulted line.	Stable	Stable	Stable
30	FLT30-SB	**Nebraska City/S3458 345kV Stuck Breaker Scenario 2** a. Apply single phase fault at the Nebraska City/S3458 (645458) end of the Nebraska City/S3458 to Cass/S3740 (645740) 345kV line. b. After 4.5 cycles, open remote end of faulted line. c. Wait 9 cycles, remove fault and trip faulted line.	Stable	Stable	Stable
31	FLT31-SB	**Nebraska City/S3458 345kV Stuck Breaker Scenario 3** a. Apply single phase fault at the Nebraska City/S3458 (645458) end of the Nebraska City/S3458 to 103&Rokeby (650189) 345kV line. b. After 4.5 cycles, open remote end of faulted line. c. Wait 9 cycles, remove fault and trip faulted line.	Stable	Stable	Stable
32	FLT32- SB	**Nebraska City/S3458 345kV Stuck Breaker Scenario 4** a. Apply single phase fault at the Nebraska City/S3458 (645458) end of the Nebraska City/S3458 to Sarpy/S3456 (645456) 345kV line. b. After 4.5 cycles, open remote end of faulted line. c. Wait 9 cycles, remove fault and trip faulted line.	Stable	Stable	Stable
33	FLT33-SB	**Nebraska City/S3458 345kV Stuck Breaker Scenario 5** a. Apply single phase fault at the Nebraska City/S3458 (645458) end of the Nebraska City/S3458 to G14-021 TAP (560009) 345kV line. b. After 4.5 cycles, open remote end of faulted line. c. Wait 9 cycles, remove fault and trip faulted line.	Stable	Stable	Stable

Cont. #	Contingency Name	Description	2015 Summer Results	2015 Winter Results	2025 Summer Results
34	FLT34-SB	**Nebraska City/S3458 345kV Stuck Breaker Scenario 6** a. Apply single phase fault at the Nebraska City/S3458 (645458) 345kV bus. b. After 14 cycles, trip Nebraska City/S3458 to Cooper (640139) 345kV line and remove fault.	Stable	Stable	Stable
35	FLT35-SB	**Nebraska City/S3458 345kV Stuck Breaker Scenario 7** a. Apply single phase fault at the Nebraska City/S3458 (645458) 345kV bus. b. After 14.5 cycles, trip Nebraska City/S3458 to Sarpy/S3456 (645456) 345kV line and remove fault.	Stable	Stable	Stable
36	FLT36-SB	**Nebraska City/S3458 345kV Stuck Breaker Scenario 8** a. Apply single phase fault at the Nebraska City/S3458 (645458) 345kV bus. b. After 14.5 cycles, trip Nebraska City/S3458 to Cass/S3740 (645740) 345kV line and remove fault.	Stable	Stable	Stable
37	FLT37-SB	**Nebraska City/S3458 345kV Stuck Breaker Scenario 9** a. Apply single phase fault at the Nebraska City/S3458 (645458) 345kV bus. b. After 14 cycles, trip Nebraska City/S3458 to 103&Rokeby (650189) 345kV line and remove fault.	Stable	Stable	Stable
38	FLT38-SB	**Nebraska City/S3458 345kV Stuck Breaker Scenario 10** a. Apply single phase fault at the Nebraska City/S3458 (645458) 345kV bus. b. After 14 cycles, trip Nebraska City/S3458 to G14-021 TAP (560009) 345kV line and remove fault.	Stable	Stable	Stable
39	FLT39-SB	**Cass/S3470 345kV Stuck Breaker Scenario 1** a. Apply single phase fault at the Cass/S3740 (645740) end of the Cass/S3740 (645740) to the S3455 (645455) 345kV line. b. After 4.5 cycles, open remote end of faulted line. c. Wait 9 cycles, remove fault and trip faulted line.	Stable	Stable	Stable
40	FLT40-SB	**Cass/S3470 345kV Stuck Breaker Scenario 2** a. Apply single phase fault at the Cass/S3740 (645740) 345kV bus. b. After 14.5 cycles, trip Cass/S3740 to S3455 (645455) 345kV line and remove fault.	Stable	Stable	Stable

Cont. #	Contingency Name	Description	2015 Summer Results	2015 Winter Results	2025 Summer Results
41	FLT41-PO	**Sibley Prior Outage Scenario 1** a. Prior Outage: Switch out Sibley (541201) to G15-005 TAP (560028) 345kV circuit 1 and solve. b. Apply 3 phase fault on the Nebraska City/S3458 (645458) to Cooper (640139) 345kV line circuit 1, near Nebraska City/S3458. c. Clear fault after 4.5 cycles and trip the faulted line and remove the fault.	Stable	Stable	Stable
42	FLT42-PO	**Sibley Prior Outage Scenario 2** a. Prior Outage: Switch out Sibley (541201) to G15-005 TAP (560028) 345kV circuit 1 and solve. b. Apply 3 phase fault on the Nebraska City/S3458 (645458) to 103&Rokeby (650189) 345kV line circuit 1, near Nebraska City/S3458. c. Clear fault after 4.5 cycles and trip the faulted line and remove fault.	Stable	Stable	Stable
43	FLT43-PO	**Sibley Prior Outage Scenario 3** a. Prior Outage: Switch out Sibley (541201) to G15-005 TAP (560028) 345kV circuit 1 and solve. b. Apply 3 phase fault on the Cass/S3740 (645740) to S3455 (645455) 345kV line circuit 1, near Cass/S3740. c. Clear fault after 4.5 cycles and trip the faulted line and remove fault.	Stable	Stable	Stable
44	FLT44-PO	**Sibley Prior Outage Scenario 4** a. Prior Outage: Switch out Sibley (541201) to G15-005 TAP (560028) 345kV circuit 1 and solve. b. Apply 3 phase fault on the Nebraska City/S3458 (645458) to Sarpy/S3456 (645456) 345kV line circuit 1, near Nebraska City/S3458. c. Clear fault after 4.5 cycles and trip the faulted line and remove fault.	Stable	Stable	Stable
45	FLT45-PO	**Sibley Prior Outage Scenario 5** a. Prior Outage: Switch out Sibley (541201) to G15-005 TAP (560028) 345kV circuit 1 and solve. b. Apply 3 phase fault on the Nebraska City/S3458 (645458) to Sarpy/S3456 (645456) 345kV line circuit 1, near Nebraska City/S3458. c. Clear fault after 4.5 cycles and trip the faulted line.	Stable	Stable	Stable

Cont. #	Contingency Name	Description	2015 Summer Results	2015 Winter Results	2025 Summer Results
46	FLT46-PO	**St. Joe Prior Outage Scenario 1** a. Prior Outage: Switch out St. Joe (541199) to Nashua (542980) 345kV circuit 1 and solve. b. Apply 3 phase fault on the St. Joe (541199) to Eastown (541400) 345kV line circuit 1, near St. Joe. c. Clear fault after 5 cycles and trip the faulted line. d. Wait 20 cycles, and then re-close the line in (b) back into the fault. e. Leave fault on for 5 cycles, then trip the line in (b) and remove fault.	Stable	Stable	Stable
47	FLT47- PO	**Cooper Prior Outage Scenario 1** a. Prior Outage: Switch out Cooper (640139) to Fairport (300039) 345kV circuit 1 and solve. b. Apply 3 phase fault on the Cooper (640139) to St. Joe (541199) 345kV line circuit 1, near Cooper. c. Clear fault after 5 cycles, then trip the line in (b) and remove fault.	Stable	Stable	Stable
48	FLT48- PO	**Cooper Prior Outage Scenario 2** a. Prior Outage: Switch out Cooper (640139) to the Nebraska City/S3458 (645458) 345kV circuit 1 and solve. b. Apply 3 phase fault on the Cooper (640139) to Moore (640277) 345kV line circuit 1, near Cooper. c. Clear fault after 5 cycles, then trip the line in (b) and remove fault.	Stable	Stable	Stable
49	FLT49- PO	**Cass/S3740 Prior Outage Scenario 1** a. Prior Outage: Switch out Cass/S3740 (645740) to S3455 (645455) 345kV circuit 1 and solve. b. Apply 3 phase fault on the Nebraska City/S3458 (645458) to Sarpy/S3456 (645456) 345kV line circuit 1, near Nebraska City/S3458. c. Clear fault after 4.5 cycles and trip the faulted line and remove fault.	Stable	Stable	Stable
50	FLT50- PO	**Cass/S3740 Prior Outage Scenario 2** a. Prior Outage: Switch out Cass/S3740 (645740) to S3455 (645455) 345kV circuit 1 and solve. b. Apply 3 phase fault on the S3455 (645455) to Sarpy/S3456 (645456) 345kV line circuit 1, near Cooper. c. Clear fault after 4.5 cycles, then trip the line in (b) and remove fault.	Stable	Stable	Stable

Cont. #	Contingency Name	Description	2015 Summer Results	2015 Winter Results	2025 Summer Results
51	FLT51- PO	**Nebraska City/S3458 Prior Outage Scenario 1** a. Prior Outage: Switch out Nebraska City/S3458 (645458) to G14-021 TAP (560009) 345kV circuit 1 and solve. b. Apply 3 phase fault on Sibley (541201) to Pleasant Hill (541200) 345kV line circuit 1, near Sibley. c. Clear fault after 5 cycles and trip the faulted line. d. Wait 20 cycles, and then re-close the line in (b) back into the fault. e. Leave fault on for 5 cycles, then trip the line in (b) and remove fault.	Stable	Stable	Stable
52	FLT52- PO	**Nebraska City/S3458 Prior Outage Scenario 2** a. Prior Outage: Switch out Nebraska City/S3458 (645458) to G14-021 TAP (560009) 345kV circuit 1 and solve. b. Apply 3 phase fault on Sibley (541201) to Hawthorne (542972) 345kV line circuit 1, near Sibley. c. Clear fault after 5 cycles and trip the faulted line. d. Wait 20 cycles, and then re-close the line in (b) back into the fault. e. Leave fault on for 5 cycles, then trip the line in (b) and remove fault.	Stable	Stable	Stable
53	FLT53- PO	**Nebraska City/S3458 Prior Outage Scenario 3** a. Prior Outage: Switch out Nebraska City/S3458 (645458) to G14-021 TAP (560009) 345kV circuit 1 and solve. b. Apply 3 phase fault on Sibley (541201) to Overton (345408) 345kV line circuit 1, near Sibley. c. Clear fault after 5 cycles and trip the faulted line. d. Wait 20 cycles, and then re-close the line in (b) back into the fault. e. Leave fault on for 5 cycles, then trip the line in (b) and remove fault.	Stable	Stable	Stable
54	FLT54- PO	**Nebraska City/S3458 Prior Outage Scenario 4** a. Prior Outage: Switch out Nebraska City/S3458 (645458) to G14-021 TAP (560009) 345kV circuit 1 and solve. b. Apply 3 phase fault on Sibley (541201) 345/(541202) 161/(541360) 13.8kV transformer circuit 1. c. Clear fault after 5 cycles and trip the faulted transformer and remove fault.	Stable	Stable	Stable

6.2. Simulation Results for Cluster Scenario

For cluster scenario, there are no impacts on the stability performance of the SPP system for the contingencies tested on the SPP provided base cases.

7. Conclusions

The findings of the impact study for the proposed interconnection projects under DISIS-2015-001 (Group 13) considered 100% of their proposed installed capacity is as follows:

1. The power factor analysis indicates the DISIS-2015-001 (Group 13) interconnection request i.e., GEN-2015-005 is required to maintain the SPP standard power factor at the point of interconnection i.e., A tap on the Nebraska City-Sibley 345kV based on the contingencies studied. Per the SPP OATT, the Interconnection Customer will be required to provide 95% lagging (supplying vars) and 95% leading (absorbing vars) at the POI.

2. To offset the capacitive effects of the collector system and transmission line of the wind farm under low wind or no wind conditions, analysis was performed for winter-2015 scenario. The analysis indicates that at POI (a tap on the Nebraska City-Sibley 345kV) 8.5 MVAR reactor is required at Bus 560028 to maintain zero MVAR flow for GEN-2015-005 generator lead. Maintaining zero MVar flow at the POI at all times is not possible with static reactor banks. It will be determined on a case by case basis for each generator as to whether additional reactor banks are required for low wind conditions.

3. The short circuit analysis is performed on the power flow models for the 2025 summer peak season for cluster scenario model. The results are documented for both 3 phase fault as well as single line to ground fault up to 5 buses away from the POI (a tap on the Nebraska City-Sibley 345kV).

4. There are no impacts on the stability performance of the SPP system during cluster scenario for the contingencies tested on the provided base cases. The study machines stayed on-line and stable for all simulated faults. The Project stability simulations with fifty four (54) specified test disturbances did not show instability problems in the SPP system. Any oscillations were damped out.

8. **Appendix A:2015 Summer Peak Case Stability Run Plots – Cluster**

9. **Appendix B:2015 Winter Peak Case Stability Run Plots – Cluster**

10. **Appendix C:2025 Summer Peak Case Stability Run Plots – Cluster**

11. **Appendix D:Project Model Data**