Southwest Power Pool

Interconnection Facilities Study For Generator Interconnection Request GEN-2014-021 (IFS-2014-002-04)

SPP Generator Interconnection Studies

(#GEN-2014-021)
(#IFS-2014-002-04)

August 2015

Revision History

Date	Author	Change Description
7/15/2015	SPP	Draft Facility Study Report Revision 0 Issued
8/13/2015	SPP	Final Facility Study Report Posted

Summary

Kansas City Power & Light Company (KCPL) (on the behalf of Transource Missouri (TMO)) and Omaha Public Power District (OPPD) performed a detailed Interconnection Facilities Study at the request of Southwest Power Pool (SPP) for Generator Interconnection request GEN-2014-021/IFS-2014-002-04 (300.00 MW/Wind) located in Atchison County, Missouri. The Interconnection Customer's originally proposed in-service date for GEN-2014-021/IFS-2014-002-04 is December 1, 2016. SPP has proposed the full interconnection service in-service date will be after the assigned Interconnection Facilities and Non-Shared Network upgrades are completed. Full Interconnection Service will require the Network Upgrades listed in the "Other Network Upgrades" section. The request for interconnection was placed with SPP in accordance with SPP's Open Access Transmission Tariff, which covers new generation interconnections on SPP's transmission system.

Phases of Interconnection Service

It is not expected that interconnection service will require phases however, interconnection service will not be available until all interconnection facilities and network upgrades can be placed in service.

Interconnection Customer Interconnection Facilities

The Interconnection Customer's generation facility consists of one hundred fifty (150) Vestas V110 2.0 MW wind turbines for a total generation nameplate capacity of 300.00 MW. There will be two (2) 34.5/345 kV Interconnection Customer owned and maintained collector substations for this wind facility. The north 345/34.5kV collector substation will be connected by an overhead 345 kV transmission line, approximately four (4) miles in length, to the south collector substation. An approximate thirteen (13) mile 345kV transmission line will connect the south collector substation of GEN-2014-021/IFS-2014-002-04 to the Point of Interconnection (POI) at the new station on the planned TMO Nebraska City – Mullin Creek - Sibley 345kV transmission circuit. Each of the collector substations will have breaker(s) protecting the two stations from the Interconnection Customer owned and maintained transmission lines. This new station is approximately fifty-eight (58) miles from Nebraska City Substation on the Nebraska City – Mullin Creek line segment and located in Holt County, Missouri. The Interconnection Customer will be responsible for all of the transmission facilities connecting the Interconnection Customer owned substation to the Point of Interconnection (POI).

The Interconnection Customer will be responsible for any equipment located at the Customer substation necessary to maintain a power factor of 0.95 lagging to 0.95 leading at the POI, including approximately 28.1 Mvar[1] of reactors to compensate for injection of reactive power into the transmission system under reduced generating conditions. Also, the Interconnection

[1] This amount of reactors is an approximated minimum needed for the configuration of the wind farm studied in DISIS-2014-002 Group 13 Reduced Wind Analysis. This reactance requirement is separate from and in addition to the 40Mvar reactor to be constructed as part of the Transmission Owner substation. This approximate amount of reactors is subject to change based on results of modification study discussed above.

Customer will need to coordinate with the Transmission Owner for relay, protection, control, and communication system configurations.

Transmission Owner Interconnection Facilities and Non-Shared Network Upgrades

To allow interconnection the Transmission Owner, Transource Missouri (TMO) will construct new 345kV station with a three (3) breaker ring bus configuration and associated terminal equipment for acceptance of the Interconnection Customer's Interconnection Facilities.

With the addition of GEN-2014-021/IFS_2014-002-04, TMO will also require a 40Mvar switchable in-line reactor[2] and associated breaker at the GEN-2014-021 Tap (Holt County) Station for Nebraska City – GEN-2014-021 Tap (Holt County) 345kV transmission circuit. For this Interconnection Facilities Study, the size and location of this line reactor has been estimated using power flow and voltage drop analysis. After the execution of a Generator Interconnection Agreement, the TMO will perform further analysis for switching surges and transient over voltages as part of the design of the substation. This analysis is usually performed after the authorization to proceed with engineering and design for Network Upgrades, but may be advanced by the Interconnection Customer at its request.

Currently, TMO estimates an Engineering and Construction (E&C) lead time of approximately eighteen (18) months after a fully executed Generator Interconnection Agreement (GIA) for the completion of Transmission Owner Interconnection Facilities and Non-Shared Network Upgrades. At this time, GEN-2014-021/IFS-2014-002-04 is responsible for $18,262,000 of Transmission Owner Interconnection Facilities and Non-Shared Network Upgrades.

In addition to the Transource Missouri (TMO) Transmission Owner Interconnection Facilities and Non-Shared Network Upgrades, Omaha Public Power District (OPPD) will be required to review and update any necessary protective relay settings at Nebraska City for the transmission line to Holt County. The current cost estimate for the OPPD Nebraska City substation relay work is $122,455. Currently, OPPD estimates an Engineering and Construction (E&C) lead time of approximately nine (9) months after a fully executed Generation Interconnection Agreement (GIA) for the completion of OPPD Transmission Owner Interconnection Facilities and Non-Shared Network Upgrades.

At this time, the Interconnection Customer is allocated $18,384,455 for Non-Shared Network Upgrades identified in the latest impact restudy. **Table 1** displays the estimated costs for Transmission Owner Interconnection Facilities and Non-Shared Network Upgrades.

[2] This reactor is separate from and in addition to the 28.1Mvars of reactance required for no/low wind conditions.

Table 1: GEN-2014-021/IFS-2014-002-04 TOIF and Non-Shared Network Upgrades

Transmission Owner Interconnection Facilities and Non-Shared Network Upgrades Description	Allocated Cost ($)	Allocated Percent (%)	Total Cost ($)
TMO Interconnection Substation - Transmission Owner Interconnection Facilities 345kV Substation work for a new line terminal position, disconnect switch, dead end structure, and associated equipment.	$600,000	100%	$600,000
TMO Interconnection Substation - Network Upgrades 345kV Substation work for a new 3 breaker ring bus station, 40Mvar reactor, 4-345kV breakers, disconnect switches, communication, revenue metering, line arrestors, breaker control panels, and associated siting. Also includes all associated equipment and work to cut-in the new Holt County substation into the Nebraska City – Mullin Creek 345 kV.	$17,662,000	100%	$17,662,000
OPPD Affected Substations - Network Upgrades 345kV Substation relay work at Nebraska City.	$122,455	100%	$122,455
Total	$18,384,455	100%	$18,384,455

Shared Network Upgrades

The Interconnection Customer was studied within the DISIS-2014-002 Impact Study and the DISIS-2014-002-1 Impact Restudy as Energy Resource Interconnection Service (ERIS) and Network Resource Interconnection Service (NRIS). At this time, the Interconnection Customer is allocated $0 for Shared Network Upgrades. If higher queued interconnection customers withdraw from the queue, suspend or terminate their GIA, restudies will have to be conducted to determine the Interconnection Customers' allocation of Shared Network Upgrades. All studies have been conducted on the basis of higher queued interconnection requests and the upgrades associated with those higher queued interconnection requests being placed in service. At this time, the Interconnection Customer is allocated the costs for Shared Network Upgrade shown in **Table 2**.

Table 2: GEN-2014-021/IFS-2014-002-04 Shared Network Upgrades

Shared Network Upgrades Description	Allocated Cost ($)	Allocated Percent (%)	Total Cost ($)
Currently, GEN-2014-021/IFS-2014-002-04 is not assigned Shared Network Upgrades	$0	n/a	$0
Total	$0	n/a	$0

Other Network Upgrades

Certain Other Network Upgrades are currently not the cost responsibility of the Customer but will be required for full Interconnection Service. Currently, the following Other Network Upgrades are required:

- Nebraska City – Mullin Creek – Sibley 345kV circuit #1[3] assigned as SPP Priority Projects per SPP-NTC-20097 and 20098. This project is currently on schedule for 12/31/2016 in-service.

Depending upon the status of higher or equally queued customers, the Interconnection Customer's in-service date is at risk of being delayed or their Interconnection Service is at risk of being reduced until the in-service date of these Other Network Upgrades.

Conclusion

Interconnection Service for GEN-2014-021/IFS-2014-002-04 will be delayed until the Transmission Owner Interconnection Facilities and Non-Shared Network Upgrades are constructed. The Interconnection Customer is responsible for $18,384,455 of Transmission Owner Interconnection Facilities and Non-Shared Network Upgrades. At this time, the Interconnection Customer is allocated $0 for Shared Network Upgrades. After all Interconnection Facilities and Network Upgrades have been placed into service, Interconnection Service for 300.00 MW, as requested by GEN-2014-021/IFS-2014-002-04, can be allowed.

At this time the total allocation of costs assigned to GEN-2014-021/IFS-2014-002-04 for interconnection Service are estimated at $18,384,455.

[3] SPP-NTC-20097 link:
http://www.spp.org/publications/NTC%2020097_Kansas%20City%20Power%20&%20Light%20Greater%20Missouri%20Operations%20Company%20-%20Harold%20Wyble.pdf
SPP-NTC-20098 link:
http://www.spp.org/publications/NTC%2020098_Omaha%20Public%20Power%20District%20-%20Mohamad%20Doghman%20.pdf

Transource Missouri

Facility Study for Southwest Power Pool

Generation Interconnection Request

GEN-2014-021

Studies prepared by Kansas City Power & Light Transmission Planning on behalf of Transource Missouri
July 8, 2015

Executive Summary

Pursuant to the Southwest Power Pool (SPP) Open Access Transmission Tariff (Tariff) and at the request of SPP, KCP&L Transmission Planning performed the following Facility Study on behalf of Transource Missouri (TMO) to satisfy the Facility Study Agreement executed by the requesting customer for SPP Generation Interconnection request Gen-2014-021. The request for interconnection was placed with SPP in accordance the Tariff, which covers new generation interconnections on SPP member's transmission system. The customer requests interconnection service for a 300-MW wind farm to tap the Nebraska City – Mullin Creek 345kV transmission line currently under development and construction by TMO (Midwest Transmission Project; MTP). The customer has proposed a commercial operation date of December 1, 2016. The requirements for interconnection consist of construction a new 345kV substation on the Nebraska City – Mullin Creek 345kV transmission line in Holt County, near Craig, Missouri.

The total cost for TMO to construct the new 345kV substation, the interconnection facility, is estimated at $18,262,000. This estimate is accurate to +/- twenty (20) percent, based on current prices, in accordance with Attachment A of Appendix 4 of the Interconnection Facilities Study Agreement. However, recent cost fluctuations in materials are very significant and the accuracy of this estimate at the time of actual procurement and construction cannot be assured.

The current expected in-service date for the MTP line is 12/31/2016. TMO normal construction schedule for 345kV interconnection substation is 18 months after execution of Generator Interconnection Agreement (GIA). Since this schedule cannot meet the Interconnection Customer's requested commercial operation date, TMO is agreeable with Interconnection Customer selecting "Option to Build" choice in GIA for interconnection substation.

This Facility Study does not guarantee the availability of transmission service necessary to deliver the additional generation to any specific point inside or outside the SPP transmission system. The transmission network facilities may not be adequate to deliver the additional generation output to the transmission system. If the customer requests firm transmission service under the SPP Tariff at a future date, Network Upgrades or other new construction may be required to provide the service requested under the SPP Tariff.

Interconnection Facilities

The primary objective of this study is to identify the transmission owner network upgrades for interconnection facilities. The customer desires to interconnect a 300-MW wind farm using VESTA 2 Mw wind turbines to the existing Nebraska City – Mullin Creek 345 kV transmission line near Craig, Missouri. The proposed commercial operation date is December 1, 2016. In accordance with KCP&L Facility Connection Standards, the requirements for interconnection consist of adding a new 345kV substation on the Nebraska City – Mullin Creek transmission line in Holt County Missouri. This 345kV substation shall be constructed, owned, and maintained by TMO. A one-line diagram of the proposed substation is shown in Figure 1 on page 6. The customer will be responsible to construct, own and maintain all facilities on the customer's side of the point of interconnection. Because the Nebraska City – Mullin Creek line is a tie line between TMO and Omaha Public Power District (OPPD), it is necessary to coordinate this study and construction work with OPPD. The major components of the transmission owner network upgrades and their estimated costs are shown below.

TMO substation land	$ 200,000
TMO substation	$13,372,000
TMO transmission line cut-in	$ 850,000
TMO AFUDC & contingency	$ 3,840,000
Total	$18,262,000

Description of transmission owner network upgrades

TMO substation land: TMO will require 7 acres for substation site next to Nebraska City – Mullin Creek transmission line. Customer may opt to convey necessary land rights for substation site to TMO. Customer is responsible for acquiring the right of way required from the customer's wind farm to the TMO substation.

TMO substation: TMO will grade site to level and construct 345kV ring bus substation with three 345kV breakers and three line terminal positions. Includes all bus work, line and disconnect switches, ground grid, security fence, control house, system protection relaying, communications equipment, and station power equipment. The substation shall have a 3000 amp continuous rating and have the capability of interrupting 50,000 amps of fault current. A disturbance monitoring device shall be installed that is capable of recording faults, frequency swings and other system disturbances. This device shall be equipped with a GPS time clock and shall be capable of using existing telephone systems. Additionally, a 40Mvar switchable in-line reactor and associated breaker is needed at the new station (Holt County) for Nebraska City - Holt County 345kV tranmission circuit as show in Figure 1.

TMO transmission line cut-in: TMO will install three new 345-kV transmission dead-end towers and conductor spans to substation bus work. Customer is responsible for all facilities, including 345kV transmission elements, on the customer's side of the interconnection point.

Engineering, Procurement, and Construction Schedule: A nominal schedule for TMO to design, procure equipment and construct a 345kV substation of this type is approximately 18 months. According to good business practice, the TMO engineering and procurement process cannot begin until the parties have executed a mutually agreeable Generation Interconnection Agreement.

Short Circuit Fault Duty Evaluation

KCP&L engineering staff reviewed short circuit analysis performed by SPP for the proposed Holt County 345 kV substation to determine if the added generation would cause the available fault currents to exceed the interrupting capability of any existing KCPL circuit breakers. The fault currents are within the circuit breaker interrupting capability with the addition of the Gen-2014-021 wind farm.

Figure 1: Preliminary One-Line Diagram Holt County 345kV Substation

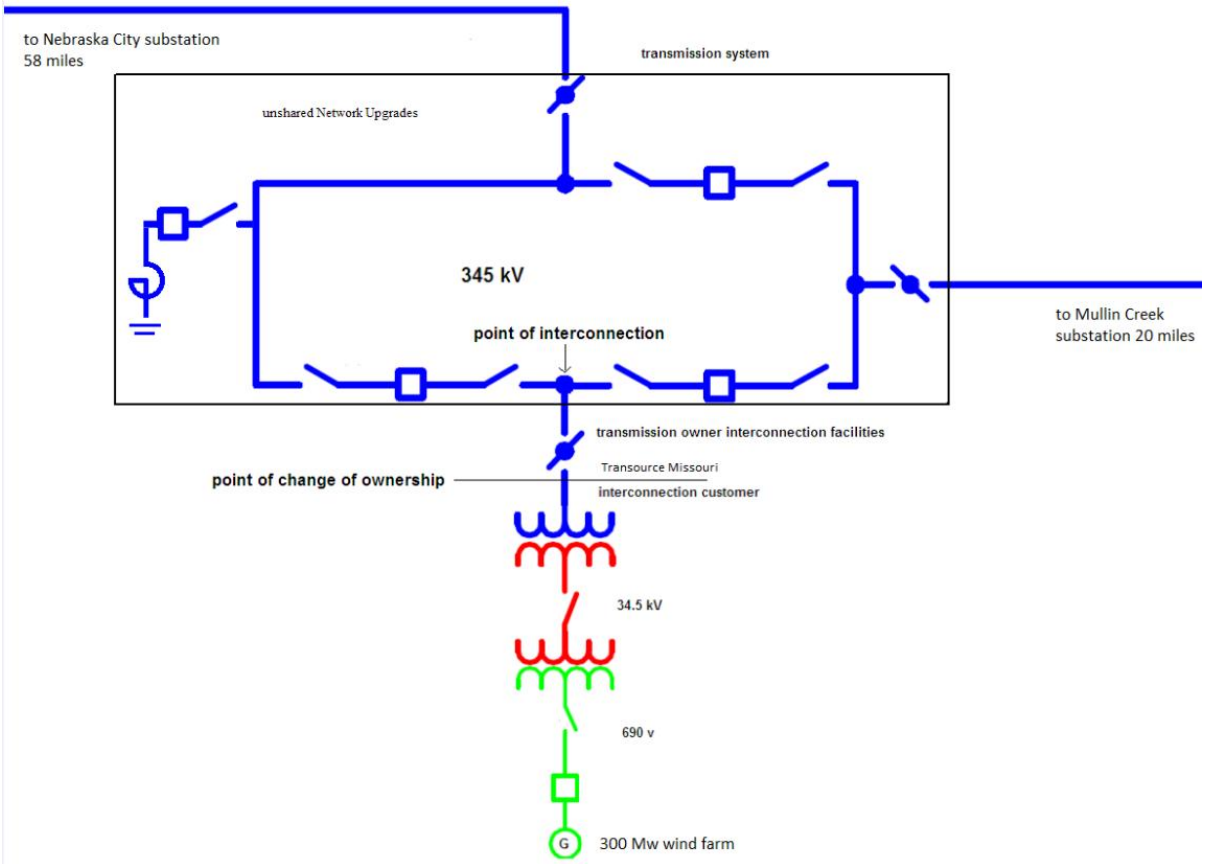

June 2015

Omaha Public Power District

Facility Study for Southwest Power Pool Generation Interconnection Request

GEN-2014-021

Prepared By: OPPD Transmission Planning

Executive Summary

A generation interconnection customer has requested Energy Recourse Interconnection Service (ERIS) under the Southwest Power Pool (SPP) Open Access Transmission Tariff (OATT) for the purpose adding a 300 MW wind generating facility in Atchison County, Missouri. The proposed in-service date for this request is 12/01/16. A Definitive Interconnection System Impact Study (DISIS-2014-002) was performed by SPP and completed in January 2015 to study this generation interconnection (GI) request. The GI request is identified in SPP's generation interconnection queue as GEN-2014-021.

The point of interconnection (POI) for this 300 MW GI request is a substation tapped into the Transource owned portion of the Omaha Public Power District (OPPD)/Transource S3458 (Nebraska City)-Mullins Creek 345 kV interconnection line. The GI request indicates that the rated output of the addition will be provided by 150 Vestas V110-2 MW wind turbines.

OPPD has conducted a facility study for the GEN-2014-021. The results of OPPD's facility study are summarized below:

Detailed Costs and Project Schedule for Required Interconnection

The following are required interconnection and network upgrades and costs for GEN-2014-021.

Upgrades	Initiating Study	Costs
GEN-2014-021 Interconnection Costs	KCPL Facility Study	$18,262,000
Install 2 - RFL 9780 and Tuner at S3458	OPPD Facility Study	$122,455
Total		**$18,384,455**

S3458 system protection relay equipment modifications/additions are required totaling $122,445. The estimated lead time needed to complete this work is approximately 9 months.

S3458 metering equipment modifications/additions are To Be Determined pending the executed Transmission Interconnection Agreement between OPPD and Transource.

Steady State Powerflow Study Results:

- No thermal constraints with an impact greater than or equal to 20% or voltage constraints with an impact greater than or equal to 0.01 pu were identified for

TPL-001-4 (system intact, single contingency & multiple contingency) conditions for the addition of GEN-2014-021.

Short Circuit Study Results:

- The results from this short circuit assessment showed GEN-2014-021 had a small effect on both three-phase and line-to-ground fault currents near the POI. After adding the GEN-2014-021 all impacted buses were effected by less than 1 kA. The symmetrical fault current increased at the nearest OPPD facility (S3458) by approximately 528 amps (1.6%). The largest impacted bus outside OPPD's system was at Mullin Creek by approximately 930 amps (13.2%). This fault current increase did not exceed OPPD's equipment ratings.

Introduction

A Facilities Study has been performed to evaluate the interconnection of a 300 MW wind generating facility interconnected to a substation tapped into the Transource owned portion of the OPPD/Transource S3458 (Nebraska City)-Mullins Creek 345 kV interconnection line approximately 58 miles from S3458 in Atchison County, Missouri. The proposed in-service date for this request is 12/01/16. The generation interconnection request for the 300 MW wind generating facility is SPP Generation Interconnection request GEN-2014-021. The generation interconnection request indicates that the rated output of the addition will be provided by 150 Vestas V110-2 MW wind turbines.

Steady State Analysis

Computer Programs

Steady-state analysis was performed using PSS®E version 33.

Methodology

Base cases representing system conditions in 2015 spring peak, and 2020 winter and summer peak were created without the GEN-2014-021 project. Study cases were created by adding the GEN-2014-021 project and dispatching the generating facility at 300 MW. Nonlinear (AC) contingency analysis was performed on both the base and study cases and the incremental impact of the GEN-2014-021 project was evaluated by comparing flows and voltages without and with the proposed interconnection.

The steady state contingency analysis performed to cover all contingencies (P1 through P7) represented in NERC standard TPL-001-4.

Steady State Model

The following SPP DIS 2014 models series were used in this analysis.

- DIS14021TC13ALL-15G0
- DIS14021TC13ALL-20WP0
- DIS14021TC13ALL-20SP0

These models had wind generation in cluster group 13 (Northwest Missouri Area) set to 100% of nameplate capacity by default. In addition to the default dispatch these models were modified to include other relevant prior queued generating facilities from cluster group 9 (Nebraska) and Iowa. All wind generation that was added to the model was set to 100% of nameplate capacity and sunk to generation outside the study area in four directions. The location of the generation added to the models is shown in Figure 1. The following generating facilities were either added or dispatched to their maximum nameplate capacity in the models:

- GEN-2009-040 (Nebraska) 73.8 MW
- GEN-2008-123N (Nebraska) 89.7 MW
- GEN-2010-041 (Nebraska) 10.5 MW
- GEN-2008-119O (Nebraska) 60 MW
- GEN-2013-014 (Nebraska) 25.5 MW
- GEN-2013-002 (Nebraska) 50.6 MW
- GEN-2013-019 (Nebraska) 73.6 MW

- ASGI-2013-007 (Missouri) 90 MW
- R26 - (Iowa) 400 MW
- GEN-2014-039(Nebraska) 73.39 MW
- GEN-2014-004 (Nebraska) 3.96 MW
- GEN-2011-018 (Nebraska) 73.6 MW
- GEN-2013-008 (Nebraska) 1.2 MW

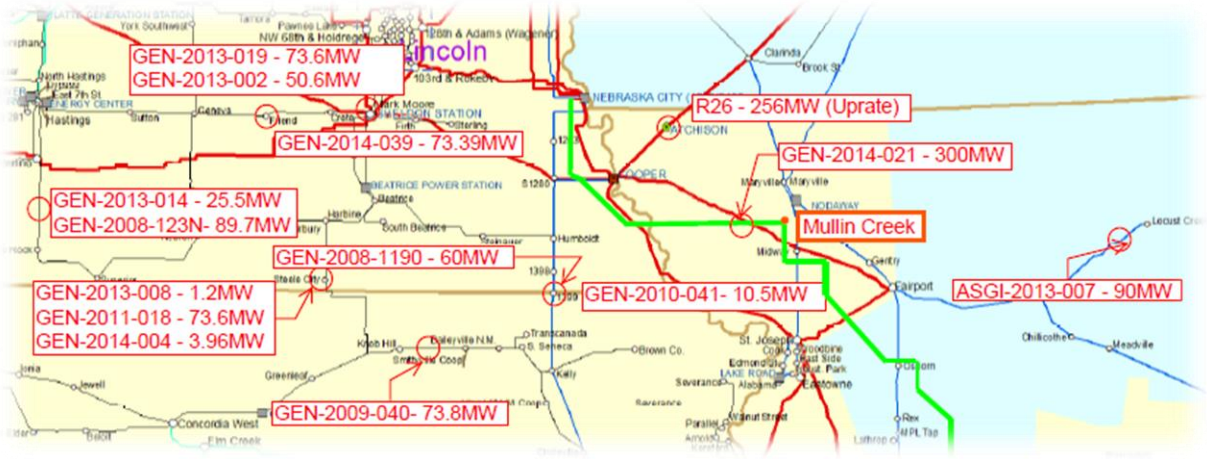

Figure 1: Location of generation added to SPP DIS models.

Cases were solved with transformer tap adjustment enabled, area interchange enabled, phase shifter adjustment enabled and switched shunt adjustment enabled.

A one-line diagram showing how the GEN-2014-021 project was modeled is shown in Figure 2. The model parameters used in this study for GEN-2014-021 are documented in Section A.1 of Appendix A.

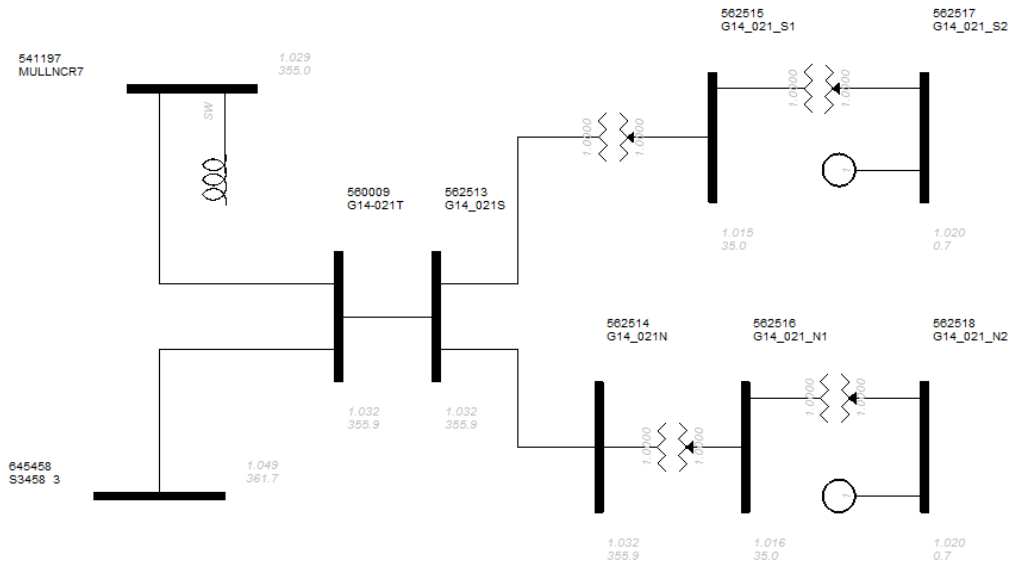

Figure 2: GEN-2014-021 Steady State One-Line Diagram

Contingency Criteria

Contingencies considered for steady-state analysis includes:

- System intact (no contingencies)
- Single Contingency analysis
    - All transmission facilities 69 kV and above in OPPD's control area (area 645) and select neighboring transmission facilities 345kV and above near the POI.
- Multiple Contingency analysis
    - All transmission facilities 69 kV and above in OPPD's control area (area 645) and select neighboring transmission facilities 345kV and above near the POI.

As part of the multiple contingency analysis, an N-1-1 analysis was performed to evaluate the impacts of planned prior outages. Planned prior outages that may be problematic are typically scheduled during light load conditions. This analysis was only performed on the 2015 spring case to determine if a planned outage could still be performed under moderate system loading conditions without a subsequent N-1 issue.

For all contingency and post-disturbance analyses, cases were solved with transformer tap adjustment enabled, area interchange adjustment enabled, phase shifter adjustment enabled and switched shunt adjustment enabled.

Monitored Elements

All transmission facilities 69 kV and above in OPPD's control system were monitored.

Thermal loadings were monitored for 90% and above for the system intact and single event contingency analysis and 95% and above for the N-1-1 analysis.

Voltages were monitored outside the range of 0.95 to 1.05 pu for both the base case and change case.

Reliability Margins

All system elements were monitored using the applicable facility ratings.

Performance Criteria

A branch is considered a significantly affected facility (SAF) if both of the following conditions are met:

1) The branch is loaded above its applicable normal or emergency rating for the post-change case.
2) The distribution factor is greater than 20% for ERIS.

For non-linear contingency analysis, distribution factors are calculated as follows:
Project MW

$$DF = 100 \times \frac{MVA\ flow\ (with\ Project) - MVA\ flow\ (w/o\ Project)}{Project\ MW}$$

A voltage impact is considered significant if both of the following conditions are met; all significant voltage impacts must be resolved before a project can receive interconnection service.

1) The bus voltage is outside of applicable normal or emergency limits for the post-change case.
2) The change in bus voltage between the change case and base case is greater than 0.01 per unit (pu).

Contingency Analysis Results

The incremental impact of the proposed interconnection on individual facilities was evaluated by comparing flows and voltages without and with the project. Analysis was performed using PSS®E activity ACCC. Although the analysis only required results to be screened to a distribution factor greater than 20% for ERIS they were screened to 3%.

System Intact Conditions

There were no facilities that met the SAF criteria for voltage or thermal conditions for NERC TPL-001-4 category P0 (pre-contingency) conditions.

Single & Multiple Event Contingencies

There were no facilities that met the SAF criteria for voltage or thermal conditions for NERC TPL-001-4 category P1, P2, P3, P4, P5, P6 and P7 conditions.

Short Circuit Study

Computer Programs

Short-Circuit analyses was performed using PSS®E version 32.

Methodology

Analysis was performed using PSS®E activity ANSI, which calculates fault currents according to the ANSI/IEEE Standard C37.5-1979. The following assumptions were made during execution of activity ANSI:

- Maximum operating voltage is 1.05 pu
- Transformer impedance correction was not applied to zero-sequence transformer impedances
- For branches and machines with a zero value of resistance in the positive or zero sequence network, the zero value was replaced with a non-zero resistance equal to the positive or zero sequence reactance divided by a scaling factor. A scaling factor of 83 for branches and a factor of 252 for machines were used.
- The fault-current multiplying factors include the effects of dc decrement only
- Reactance is used to determine short-circuit current magnitudes (E/X calculation)
- Contact parting times are the minimum parting times shown in Figure 10 of IEEE Standard C37.010-1999, i.e., three-cycle contact parting time for 5-cycle breaker, two-cycle contact parting time for 3-cycle breaker, and 1.5-cycle contact parting time for 2-cycle breaker.

For both three-phase and single-line-to-ground faults, activity ANSI calculates the symmetrical fault current, the X/R ratio as specified in ANSI/IEEE Standard C37.5-1979 and IEEE Standard C37.010-1999, and the fault-current multiplying factor from ANSI/IEEE Standard C37.5-1979 for determining the adequacy of the interrupting capability of breakers rated on a total current basis. Fault-current multiplying factors for determining the adequacy of the interrupting capability of breakers rated on a symmetrical current basis are not calculated by the activity and were determined external to PSS®E from IEEE Standard C37.010-1999.

Results were produced for a transmission-system topology of all branches in service for all buses within the OPPD area and all buses seven or fewer buses away from the GEN-2014-021 POI. Results were analyzed for increases in fault current caused by the GEN-2014-021 between three-phase and single-line-to-ground faults of the product of the symmetrical fault current and either of the two types of fault-current multiplying factors described above. An evaluation was done to determine if any of the circuit breakers in OPPD's system would have inadequate interrupting capability based on the results for a transmission-system topology of all branches in service. For any such breakers, more-

detailed analysis would then be performed to determine the actual interrupting duty of those breakers based on the configuration of the substation in which they are located.

For the OPPD system, only circuit breakers at a nominal voltage level of 69 kV or higher were evaluated. Adequacy of the interrupting capability of each OPPD circuit breaker was determined by multiplying the symmetrical fault current seen by the breaker by the appropriate fault-current multiplying factor and comparing the result with the breaker's interrupting rating reduced for reclosing service as appropriate.

Short-Circuit Model

The short circuit analysis was performed using the best available short circuit model to assess the fault duty of buses within the study area and to identify if any circuit breaker ratings were exceeded as a result of the GEN-2014-021 addition.

For the short circuit model OPPD developed two cases: a base case without GEN-2014-021 and a study case which included GEN-2014-021. The only difference between the base case and the study case was the inclusion of the GEN-2014-021 in the study case.

A one-line diagram showing how the GEN-2014-021 project was modeled is shown in Figure 3. The model parameters used in this study for GEN-2014-021 are documented in Section A.2 of Appendix A.

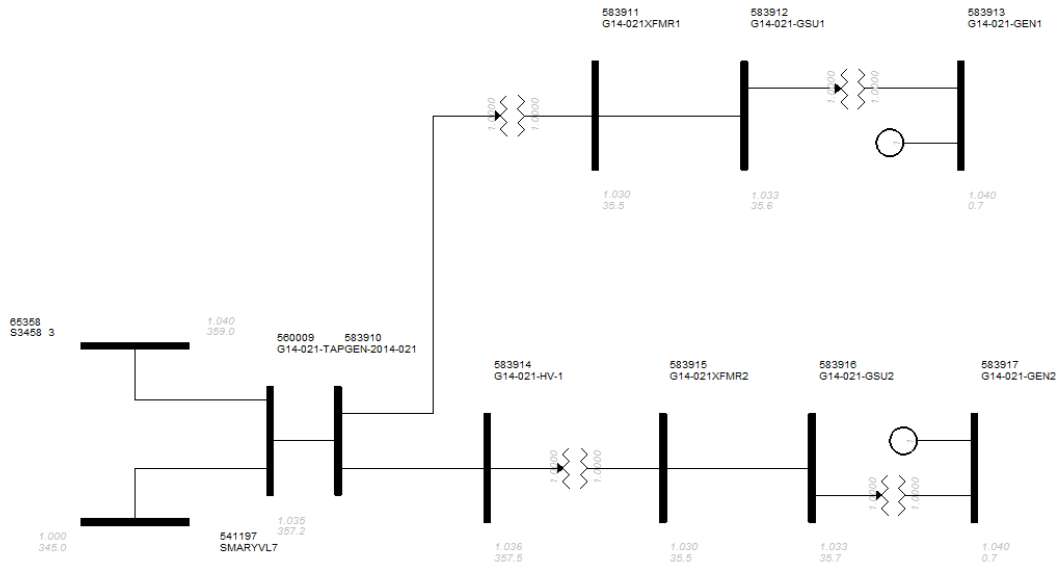

Figure 3: GEN-2014-021 Short Circuit One-Line Diagram

Results

Interrupting devices were checked at substations seven or fewer buses away from the GEN-2014-021 POI.

Results from the base case and the study case for the product of symmetrical fault current and the appropriate multiplying factor from the ANSI/IEEE standards for a transmission-system topology of all branches in service are shown in Appendix B. Results are shown for busses with a fault current increase of greater than or equal to one amp for breakers with rated interrupting times of 2, 3 and 5 cycles for all buses seven or fewer buses away from the GEN-2014-021 POI. For the OPPD area, results are also shown for buses more than seven buses away from the Point of Interconnection of the GEN-2014-021 project. The currents in the tables of Appendix B are the higher of the currents for either three-phase or single-line-to-ground faults.

The results of the short circuit analysis show fault current increases at several substation in the study area. The largest increase on an OPPD facility was observed at S3458 at around 528 amps (1.6%). The largest increase outside OPPD's system was at Mullin Creek by approximately 930 amps (13.2%). All impacted buses were effected by less than 1 kA.

OPPD performed an evaluation to determine whether any of the circuit breakers would have inadequate interrupting capability based on the results for a transmission-system topology of all branches in service. The review by OPPD of the results for a transmission-system topology of all branches in service determined that OPPD's breaker interrupting capabilities were adequate.

Appendix A. Modeling Data for GEN-2014-021

A.1 Power Flow Model Data

PSS®E Activity EXAM

```
DATA FOR BUS 560009 [G14-021T    345.00] RESIDING IN AREA  540, ZONE  596, OWNER  540:

CODE P Q - L O A D     I - L O A D     Y - L O A D G-SHUNT B-SHUNT VOLTAGE  ANGLE
 1     0.0     0.0     0.0     0.0     0.0     0.0     0.0     0.0 1.03168 -17.38

X------- TO BUS --------X
  BUS# X-- NAME --X BASKV CKT   LINE R   LINE X CHARGING ST MET RATE-A RATE-B RATE-C LENGTH ZI OWN1 FRAC1 OWN2 FRAC2 OWN3 FRAC3 OWN4 FRAC4
541197 MULLNCR7    345.00  1   0.00035  0.00629  0.12042  1  T  1792.0 1792.0 1792.0   12.0     540 0.928  645 0.072
562513 G14_021S    345.00  1   0.00000  0.00010  0.00000  1  F     0.0    0.0    0.0   12.8  Z  540 1.000
645458 S3458  3    345.00  1   0.00168  0.03038  0.58201  1  F  1792.0 1792.0 1792.0   58.0     540 0.928  645 0.072


DATA FOR BUS 562513 [G14_021S    345.00] RESIDING IN AREA  540, ZONE  596, OWNER  540:

CODE P Q - L O A D     I - L O A D     Y - L O A D G-SHUNT B-SHUNT VOLTAGE  ANGLE
 1     0.0     0.0     0.0     0.0     0.0     0.0     0.0     0.0 1.03168 -17.38

X------- TO BUS --------X
  BUS# X-- NAME --X BASKV CKT   LINE R   LINE X CHARGING ST MET RATE-A RATE-B RATE-C LENGTH ZI OWN1 FRAC1 OWN2 FRAC2 OWN3 FRAC3 OWN4 FRAC4
560009 G14-021T    345.00  1   0.00000  0.00010  0.00000  1  T     0.0    0.0    0.0   12.8  Z  540 1.000
562514 G14_021N    345.00  1   0.00000  0.00010  0.00000  1  F     0.0    0.0    0.0    5.3  Z  540 1.000

X------- TO BUS --------X        XFRMER    S W M C C      SPECIFIED              MAGNETIZING Y        TBL CORRECTED
  BUS# X-- NAME --X BASKV CKT X-- NAME --X T 1 T Z M   R 1-2    X 1-2  SBAS1-2   MAG1     MAG2  TBL  R 1-2    X 1-2
562515 G14_021_S1  34.500  1  G14021SSUB   1 T T 2 1  0.00220  0.08500  108.0  0.00000  0.00000  0

X------- TO BUS --------X     C
  BUS# X-- NAME --X BASKV CKT W  WINDV1  NOMV1  ANGLE  WINDV2  NOMV2  RATEA  RATEB  RATEC OWN1 FRAC1 OWN2 FRAC2 OWN3 FRAC3 OWN4 FRAC4
562515 G14_021_S1  34.500  1  1 1.00000 0.0000    0.0 1.00000 0.0000    0.0    0.0    0.0  540 1.000

X------- TO BUS --------X     W C                                       X---- CONTROLLED BUS ----X CONECXN
  BUS# X-- NAME --X BASKV CKT 1 W CN   RMAX    RMIN    VMAX    VMIN  NTPS    BUS# X-- NAME --X BASKV   ANGLE    CR      CX
562515 G14_021_S1  34.500  1  T 1  0 1.10000 0.90000 1.10000 0.90000   33                               0.000


DATA FOR BUS 562514 [G14_021N    345.00] RESIDING IN AREA  540, ZONE  596, OWNER  540:

CODE P Q - L O A D     I - L O A D     Y - L O A D G-SHUNT B-SHUNT VOLTAGE  ANGLE
 1     0.0     0.0     0.0     0.0     0.0     0.0     0.0     0.0 1.03168 -17.38
```

```
X------- TO BUS --------X
  BUS# X-- NAME --X BASKV CKT   LINE R   LINE X CHARGING ST MET RATE-A RATE-B RATE-C LENGTH ZI OWN1 FRAC1 OWN2 FRAC2 OWN3 FRAC3 OWN4 FRAC4
562513 G14_021S    345.00  1   0.00000  0.00010  0.00000  1  T     0.0    0.0    0.0    5.3  Z  540 1.000

X------- TO BUS --------X        XFRMER    S W M C C      SPECIFIED              MAGNETIZING Y        TBL CORRECTED
  BUS# X-- NAME --X BASKV CKT X-- NAME --X T 1 T Z M   R 1-2    X 1-2  SBAS1-2   MAG1     MAG2  TBL  R 1-2    X 1-2
562516 G14_021_N1  34.500  1  G14021NSUB   1 T T 2 1  0.00230  0.08500   97.0  0.00000  0.00000  0

X------- TO BUS --------X     C
  BUS# X-- NAME --X BASKV CKT W  WINDV1  NOMV1  ANGLE  WINDV2  NOMV2  RATEA  RATEB  RATEC OWN1 FRAC1 OWN2 FRAC2 OWN3 FRAC3 OWN4 FRAC4
562516 G14_021_N1  34.500  1  1 1.00000 0.0000    0.0 1.00000 0.0000    0.0    0.0    0.0  540 1.000

X------- TO BUS --------X     W C                                        X---- CONTROLLED BUS ----X CONECXN
  BUS# X-- NAME --X BASKV CKT 1 W CN   RMAX    RMIN    VMAX    VMIN  NTPS    BUS# X-- NAME --X BASKV   ANGLE    CR      CX
562516 G14_021_N1  34.500  1  T 1  0 1.10000 0.90000 1.10000 0.90000   33                               0.000


DATA FOR BUS 562515 [G14_021_S1  34.500] RESIDING IN AREA  540, ZONE  596, OWNER  540:

CODE P Q - L O A D     I - L O A D     Y - L O A D G-SHUNT B-SHUNT VOLTAGE  ANGLE
 1     0.0     0.0     0.0     0.0     0.0     0.0     0.0     0.0 1.01549 -10.61

X------- TO BUS --------X        XFRMER    S W M C C      SPECIFIED              MAGNETIZING Y        TBL CORRECTED
  BUS# X-- NAME --X BASKV CKT X-- NAME --X T 1 T Z M   R 1-2    X 1-2  SBAS1-2   MAG1     MAG2  TBL  R 1-2    X 1-2
562513 G14_021S    345.00  1  G14021SSUB   1 F F 2 1  0.00220  0.08500  108.0  0.00000  0.00000  0
562517 G14_021_S2  0.6900  1  G14021SGSU   1 T T 2 1  0.00980  0.07800  165.9  0.00000  0.00000  0

X------- TO BUS --------X     C
  BUS# X-- NAME --X BASKV CKT W  WINDV1  NOMV1  ANGLE  WINDV2  NOMV2  RATEA  RATEB  RATEC OWN1 FRAC1 OWN2 FRAC2 OWN3 FRAC3 OWN4 FRAC4
562513 G14_021S    345.00  1  1 1.00000 0.0000    0.0 1.00000 0.0000    0.0    0.0    0.0  540 1.000
562517 G14_021_S2  0.6900  1  1 1.00000 0.0000    0.0 1.00000 0.0000    0.0    0.0    0.0  540 1.000

X------- TO BUS --------X     W C                                        X---- CONTROLLED BUS ----X CONECXN
  BUS# X-- NAME --X BASKV CKT 1 W CN   RMAX    RMIN    VMAX    VMIN  NTPS    BUS# X-- NAME --X BASKV   ANGLE    CR      CX
562513 G14_021S    345.00  1  F 1  0 1.10000 0.90000 1.10000 0.90000   33                               0.000
562517 G14_021_S2  0.6900  1  T 1  0 1.10000 0.90000 1.10000 0.90000    5                               0.000


DATA FOR BUS 562516 [G14_021_N1  34.500] RESIDING IN AREA  540, ZONE  596, OWNER  540:

CODE P Q - L O A D     I - L O A D     Y - L O A D G-SHUNT B-SHUNT VOLTAGE  ANGLE
 1     0.0     0.0     0.0     0.0     0.0     0.0     0.0     0.0 1.01554 -10.61

X------- TO BUS --------X        XFRMER    S W M C C      SPECIFIED              MAGNETIZING Y        TBL CORRECTED
  BUS# X-- NAME --X BASKV CKT X-- NAME --X T 1 T Z M   R 1-2    X 1-2  SBAS1-2   MAG1     MAG2  TBL  R 1-2    X 1-2
562514 G14_021N    345.00  1  G14021NSUB   1 F F 2 1  0.00230  0.08500   97.0  0.00000  0.00000  0
562518 G14_021_N2  0.6900  1  G14021NGSU   1 T T 2 1  0.00980  0.07800  149.1  0.00000  0.00000  0

X------- TO BUS --------X     C
  BUS# X-- NAME --X BASKV CKT W  WINDV1  NOMV1  ANGLE  WINDV2  NOMV2  RATEA  RATEB  RATEC OWN1 FRAC1 OWN2 FRAC2 OWN3 FRAC3 OWN4 FRAC4
562514 G14_021N    345.00  1  1 1.00000 0.0000    0.0 1.00000 0.0000    0.0    0.0    0.0  540 1.000
562518 G14_021_N2  0.6900  1  1 1.00000 0.0000    0.0 1.00000 0.0000    0.0    0.0    0.0  540 1.000
```

```
X------- TO BUS --------X     W C                                       X---- CONTROLLED BUS ----X CONECXN
  BUS# X-- NAME --X BASKV CKT 1 W CN   RMAX    RMIN    VMAX    VMIN  NTPS    BUS# X-- NAME --X BASKV   ANGLE    CR      CX
562514 G14_021N    345.00  1  F 1  0 1.10000 0.90000 1.10000 0.90000   33                               0.000
562518 G14_021_N2  0.6900  1  T 1  0 1.10000 0.90000 1.10000 0.90000    5                               0.000


DATA FOR BUS 562517 [G14_021_S2  0.6900] RESIDING IN AREA  540, ZONE  596, OWNER  540:

CODE P Q - L O A D     I - L O A D     Y - L O A D G-SHUNT B-SHUNT VOLTAGE  ANGLE
 2     0.0     0.0     0.0     0.0     0.0     0.0     0.0     0.0 1.02000  -6.48

                                                X--------- REMOTE BUS ----------X
PLNT PGEN    QGEN    QMAX    QMIN  VSCHED  PCT Q   BUS# X-- NAME --X BASKV VOLTAGE
    158.0    -4.4    51.9   -51.9 1.02000 100.00

ID ST  PGEN   QGEN   QMAX   QMIN  MBASE  Z S O R C E    X T R A N   GENTAP   PMAX   PMIN OWN1 FRAC1 OWN2 FRAC2 OWN3 FRAC3 OWN4 FRAC4 WMOD   WPF
1  1  158.0   -4.4   51.9  -51.9  164.3 0.0050 0.1669 0.0000 0.0000 1.0000  158.0    0.0  540 1.000                                     2  0.9500

X------- TO BUS --------X        XFRMER    S W M C C      SPECIFIED              MAGNETIZING Y        TBL CORRECTED
  BUS# X-- NAME --X BASKV CKT X-- NAME --X T 1 T Z M   R 1-2    X 1-2  SBAS1-2   MAG1     MAG2  TBL  R 1-2    X 1-2
562515 G14_021_S1  34.500  1  G14021SGSU   1 F F 2 1  0.00980  0.07800  165.9  0.00000  0.00000  0

X------- TO BUS --------X     C
  BUS# X-- NAME --X BASKV CKT W  WINDV1  NOMV1  ANGLE  WINDV2  NOMV2  RATEA  RATEB  RATEC OWN1 FRAC1 OWN2 FRAC2 OWN3 FRAC3 OWN4 FRAC4
562515 G14_021_S1  34.500  1  1 1.00000 0.0000    0.0 1.00000 0.0000    0.0    0.0    0.0  540 1.000

X------- TO BUS --------X     W C                                       X---- CONTROLLED BUS ----X CONECXN
  BUS# X-- NAME --X BASKV CKT 1 W CN   RMAX    RMIN    VMAX    VMIN  NTPS    BUS# X-- NAME --X BASKV   ANGLE    CR      CX
562515 G14_021_S1  34.500  1  F 1  0 1.10000 0.90000 1.10000 0.90000    5                               0.000


DATA FOR BUS 562518 [G14_021_N2  0.6900] RESIDING IN AREA  540, ZONE  596, OWNER  540:

CODE P Q - L O A D     I - L O A D     Y - L O A D G-SHUNT B-SHUNT VOLTAGE  ANGLE
 2     0.0     0.0     0.0     0.0     0.0     0.0     0.0     0.0 1.02000  -6.48

                                                X--------- REMOTE BUS ----------X
PLNT PGEN    QGEN    QMAX    QMIN  VSCHED  PCT Q   BUS# X-- NAME --X BASKV VOLTAGE
    142.0    -4.0    46.7   -46.7 1.02000 100.00

ID ST  PGEN   QGEN   QMAX   QMIN  MBASE  Z S O R C E    X T R A N   GENTAP   PMAX   PMIN OWN1 FRAC1 OWN2 FRAC2 OWN3 FRAC3 OWN4 FRAC4 WMOD   WPF
1  1  142.0   -4.0   46.7  -46.7  147.7 0.0050 0.1669 0.0000 0.0000 1.0000  142.0    0.0  540 1.000                                     2  0.9500

X------- TO BUS --------X        XFRMER    S W M C C      SPECIFIED              MAGNETIZING Y        TBL CORRECTED
  BUS# X-- NAME --X BASKV CKT X-- NAME --X T 1 T Z M   R 1-2    X 1-2  SBAS1-2   MAG1     MAG2  TBL  R 1-2    X 1-2
562516 G14_021_N1  34.500  1  G14021NGSU   1 F F 2 1  0.00980  0.07800  149.1  0.00000  0.00000  0

X------- TO BUS --------X     C
  BUS# X-- NAME --X BASKV CKT W  WINDV1  NOMV1  ANGLE  WINDV2  NOMV2  RATEA  RATEB  RATEC OWN1 FRAC1 OWN2 FRAC2 OWN3 FRAC3 OWN4 FRAC4
562516 G14_021_N1  34.500  1  1 1.00000 0.0000    0.0 1.00000 0.0000    0.0    0.0    0.0  540 1.000

X------- TO BUS --------X     W C                                       X---- CONTROLLED BUS ----X CONECXN
  BUS# X-- NAME --X BASKV CKT 1 W CN   RMAX    RMIN    VMAX    VMIN  NTPS    BUS# X-- NAME --X BASKV   ANGLE    CR      CX
```

```
 562516 G14_021_N1  34.500  1  F 1  0 1.10000 0.90000 1.10000 0.90000    5                                0.000
```

A.2 Short Circuit Wind Farm Parameters

PSS®E Activity EXAM

```
DATA FOR BUS 560009 [G14-021-TAP 345.00] RESIDING IN AREA  540, ZONE  596, OWNER  540:

 CODE P Q - L O A D     I - L O A D     Y - L O A D G-SHUNT B-SHUNT VOLTAGE  ANGLE
  1     0.0     0.0     0.0     0.0     0.0     0.0     0.0     0.0 1.03530 -12.12

 X------- TO BUS --------X
   BUS# X-- NAME --X BASKV CKT   LINE R   LINE X CHARGING ST MET RATE-A RATE-B RATE-C LENGTH ZI OWN1 FRAC1 OWN2 FRAC2 OWN3 FRAC3 OWN4 FRAC4
  65358 S3458  3    345.00  1   0.00205  0.03007  0.57599  1  F  1792.0 1792.0 1792.0   63.8     540 0.928  645 0.072
 541197 SMARYVL7    345.00  1   0.00045  0.00660  0.12644  1  T  1792.0 1792.0 1792.0   14.0     540 0.928  645 0.072
 583910 GEN-2014-021345.00  1   0.00129  0.00829  0.08777  1  F     0.0    0.0    0.0   13.0     540 1.000


 DATA FOR BUS 583910 [GEN-2014-021345.00] RESIDING IN AREA  540, ZONE  596, OWNER  540:

 CODE P Q - L O A D     I - L O A D     Y - L O A D G-SHUNT B-SHUNT VOLTAGE  ANGLE
  1     0.0     0.0     0.0     0.0     0.0     0.0     0.0     0.0 1.03600 -10.81

 X------- TO BUS --------X
   BUS# X-- NAME --X BASKV CKT   LINE R   LINE X CHARGING ST MET RATE-A RATE-B RATE-C LENGTH ZI OWN1 FRAC1 OWN2 FRAC2 OWN3 FRAC3 OWN4 FRAC4
 560009 G14-021-TAP 345.00  1   0.00129  0.00829  0.08777  1  T     0.0    0.0    0.0   13.0     540 1.000
 583914 G14-021-HV-1345.00  1   0.00040  0.00255  0.02701  1  F     0.0    0.0    0.0    4.0     540 1.000

 X------- TO BUS --------X        XFRMER    S W M C C      SPECIFIED              MAGNETIZING Y        TBL CORRECTED
   BUS# X-- NAME --X BASKV CKT X-- NAME --X T 1 T Z M   R 1-2    X 1-2  SBAS1-2   MAG1     MAG2  TBL  R 1-2    X 1-2
 583911 G14-021XFMR134.500  1               1 F F 2 1  0.00187  0.07278  100.0  0.00000  0.00000  0

 X------- TO BUS --------X     C
   BUS# X-- NAME --X BASKV CKT W  WINDV1  NOMV1  ANGLE  WINDV2  NOMV2  RATEA  RATEB  RATEC OWN1 FRAC1 OWN2 FRAC2 OWN3 FRAC3 OWN4 FRAC4
 583911 G14-021XFMR134.500  1  1 1.00000 0.0000    0.0 1.00000 0.0000  180.0  180.0  180.0  540 1.000

 X------- TO BUS --------X     W C                                       X---- CONTROLLED BUS ----X CONECXN
   BUS# X-- NAME --X BASKV CKT 1 W CN   RMAX    RMIN    VMAX    VMIN  NTPS    BUS# X-- NAME --X BASKV   ANGLE    CR      CX
 583911 G14-021XFMR134.500  1  F 1  0 1.10000 0.90000 1.10000 0.90000   33                               0.000


 DATA FOR BUS 583911 [G14-021XFMR134.500] RESIDING IN AREA    1, ZONE    1, OWNER    1:

 CODE P Q - L O A D     I - L O A D     Y - L O A D G-SHUNT B-SHUNT VOLTAGE  ANGLE
  1     0.0     0.0     0.0     0.0     0.0     0.0     0.0     0.0 1.02960  -4.20

 X------- TO BUS --------X
   BUS# X-- NAME --X BASKV CKT   LINE R   LINE X CHARGING ST MET RATE-A RATE-B RATE-C LENGTH ZI OWN1 FRAC1 OWN2 FRAC2 OWN3 FRAC3 OWN4 FRAC4
```

```
583912 G14-021-GSU134.500  1   0.00259  0.00583  0.08247  1  F     0.0    0.0    0.0    0.0       1 1.000

X------- TO BUS --------X        XFRMER    S W M C C      SPECIFIED              MAGNETIZING Y        TBL CORRECTED
  BUS# X-- NAME --X BASKV CKT X-- NAME --X T 1 T Z M   R 1-2    X 1-2  SBAS1-2   MAG1     MAG2  TBL  R 1-2    X 1-2
583910 GEN-2014-021345.00  1               1 T T 2 1  0.00187  0.07278  100.0  0.00000  0.00000  0

X------- TO BUS --------X     C
  BUS# X-- NAME --X BASKV CKT W  WINDV1  NOMV1  ANGLE  WINDV2  NOMV2  RATEA  RATEB  RATEC OWN1 FRAC1 OWN2 FRAC2 OWN3 FRAC3 OWN4 FRAC4
583910 GEN-2014-021345.00  1  1 1.00000 0.0000    0.0 1.00000 0.0000  180.0  180.0  180.0  540 1.000

X------- TO BUS --------X     W C                                        X---- CONTROLLED BUS ----X CONECXN
  BUS# X-- NAME --X BASKV CKT 1 W CN   RMAX    RMIN    VMAX    VMIN  NTPS    BUS# X-- NAME --X BASKV   ANGLE    CR      CX
583910 GEN-2014-021345.00  1  T 1  0 1.10000 0.90000 1.10000 0.90000   33                               0.000


DATA FOR BUS 583914 [G14-021-HV-1345.00] RESIDING IN AREA  540, ZONE  596, OWNER  540:

CODE P Q - L O A D     I - L O A D     Y - L O A D G-SHUNT B-SHUNT VOLTAGE  ANGLE
 1     0.0     0.0     0.0     0.0     0.0     0.0     0.0     0.0 1.03620 -10.55

X------- TO BUS --------X
  BUS# X-- NAME --X BASKV CKT   LINE R   LINE X CHARGING ST MET RATE-A RATE-B RATE-C LENGTH ZI OWN1 FRAC1 OWN2 FRAC2 OWN3 FRAC3 OWN4 FRAC4
583910 GEN-2014-021345.00  1   0.00040  0.00255  0.02701  1  T     0.0    0.0    0.0    4.0     540 1.000

X------- TO BUS --------X        XFRMER    S W M C C      SPECIFIED              MAGNETIZING Y        TBL CORRECTED
  BUS# X-- NAME --X BASKV CKT X-- NAME --X T 1 T Z M   R 1-2    X 1-2  SBAS1-2   MAG1     MAG2  TBL  R 1-2    X 1-2
583915 G14-021XFMR234.500  1               1 F F 2 1  0.00219  0.08103  100.0  0.00000  0.00000  0

X------- TO BUS --------X     C
  BUS# X-- NAME --X BASKV CKT W  WINDV1  NOMV1  ANGLE  WINDV2  NOMV2  RATEA  RATEB  RATEC OWN1 FRAC1 OWN2 FRAC2 OWN3 FRAC3 OWN4 FRAC4
583915 G14-021XFMR234.500  1  1 1.00000 0.0000    0.0 1.00000 0.0000  162.0  162.0  162.0  540 1.000

X------- TO BUS --------X     W C                                        X---- CONTROLLED BUS ----X CONECXN
  BUS# X-- NAME --X BASKV CKT 1 W CN   RMAX    RMIN    VMAX    VMIN  NTPS    BUS# X-- NAME --X BASKV   ANGLE    CR      CX
583915 G14-021XFMR234.500  1  F 1  0 1.10000 0.90000 1.10000 0.90000   33                               0.000


DATA FOR BUS 583912 [G14-021-GSU134.500] RESIDING IN AREA    1, ZONE    1, OWNER    1:

CODE P Q - L O A D     I - L O A D     Y - L O A D G-SHUNT B-SHUNT VOLTAGE  ANGLE
 1     0.0     0.0     0.0     0.0     0.0     0.0     0.0     0.0 1.03320  -3.70

X------- TO BUS --------X
  BUS# X-- NAME --X BASKV CKT   LINE R   LINE X CHARGING ST MET RATE-A RATE-B RATE-C LENGTH ZI OWN1 FRAC1 OWN2 FRAC2 OWN3 FRAC3 OWN4 FRAC4
583911 G14-021XFMR134.500  1   0.00259  0.00583  0.08247  1  T     0.0    0.0    0.0    0.0       1 1.000

X------- TO BUS --------X        XFRMER    S W M C C      SPECIFIED              MAGNETIZING Y        TBL CORRECTED
  BUS# X-- NAME --X BASKV CKT X-- NAME --X T 1 T Z M   R 1-2    X 1-2  SBAS1-2   MAG1     MAG2  TBL  R 1-2    X 1-2
583913 G14-021-GEN10.6900  1               1 F F 2 1  0.00539  0.04315  100.0  0.00000  0.00000  0

X------- TO BUS --------X     C
  BUS# X-- NAME --X BASKV CKT W  WINDV1  NOMV1  ANGLE  WINDV2  NOMV2  RATEA  RATEB  RATEC OWN1 FRAC1 OWN2 FRAC2 OWN3 FRAC3 OWN4 FRAC4
583913 G14-021-GEN10.6900  1  1 1.00000 0.0000    0.0 1.00000 0.0000  158.0  158.0  158.0    1 1.000
```

```
X------- TO BUS --------X     W C                                       X---- CONTROLLED BUS ----X CONECXN
  BUS# X-- NAME --X BASKV CKT 1 W CN   RMAX    RMIN    VMAX    VMIN  NTPS    BUS# X-- NAME --X BASKV   ANGLE    CR      CX
583913 G14-021-GEN10.6900  1  F 1  0 1.10000 0.90000 1.10000 0.90000    5                               0.000


DATA FOR BUS 583915 [G14-021XFMR234.500] RESIDING IN AREA    1, ZONE    1, OWNER    1:

CODE P Q - L O A D     I - L O A D     Y - L O A D G-SHUNT B-SHUNT VOLTAGE  ANGLE
 1     0.0     0.0     0.0     0.0     0.0     0.0     0.0     0.0 1.03010  -3.94

X------- TO BUS --------X
  BUS# X-- NAME --X BASKV CKT   LINE R   LINE X CHARGING ST MET RATE-A RATE-B RATE-C LENGTH ZI OWN1 FRAC1 OWN2 FRAC2 OWN3 FRAC3 OWN4 FRAC4
583916 G14-021-GSU234.500  1   0.00271  0.00611  0.07493  1  F     0.0    0.0    0.0    0.0       1 1.000

X------- TO BUS --------X        XFRMER    S W M C C      SPECIFIED              MAGNETIZING Y        TBL CORRECTED
  BUS# X-- NAME --X BASKV CKT X-- NAME --X T 1 T Z M   R 1-2    X 1-2  SBAS1-2   MAG1     MAG2  TBL  R 1-2    X 1-2
583914 G14-021-HV-1345.00  1               1 T T 2 1  0.00219  0.08103  100.0  0.00000  0.00000  0

X------- TO BUS --------X     C
  BUS# X-- NAME --X BASKV CKT W  WINDV1  NOMV1  ANGLE  WINDV2  NOMV2  RATEA  RATEB  RATEC OWN1 FRAC1 OWN2 FRAC2 OWN3 FRAC3 OWN4 FRAC4
583914 G14-021-HV-1345.00  1  1 1.00000 0.0000    0.0 1.00000 0.0000  162.0  162.0  162.0  540 1.000

X------- TO BUS --------X     W C                                       X---- CONTROLLED BUS ----X CONECXN
  BUS# X-- NAME --X BASKV CKT 1 W CN   RMAX    RMIN    VMAX    VMIN  NTPS    BUS# X-- NAME --X BASKV   ANGLE    CR      CX
583914 G14-021-HV-1345.00  1  T 1  0 1.10000 0.90000 1.10000 0.90000   33                               0.000


DATA FOR BUS 583916 [G14-021-GSU234.500] RESIDING IN AREA    1, ZONE    1, OWNER    1:

CODE P Q - L O A D     I - L O A D     Y - L O A D G-SHUNT B-SHUNT VOLTAGE  ANGLE
 1     0.0     0.0     0.0     0.0     0.0     0.0     0.0     0.0 1.03340  -3.47

X------- TO BUS --------X
  BUS# X-- NAME --X BASKV CKT   LINE R   LINE X CHARGING ST MET RATE-A RATE-B RATE-C LENGTH ZI OWN1 FRAC1 OWN2 FRAC2 OWN3 FRAC3 OWN4 FRAC4
583915 G14-021XFMR234.500  1   0.00271  0.00611  0.07493  1  T     0.0    0.0    0.0    0.0       1 1.000

X------- TO BUS --------X        XFRMER    S W M C C      SPECIFIED              MAGNETIZING Y        TBL CORRECTED
  BUS# X-- NAME --X BASKV CKT X-- NAME --X T 1 T Z M   R 1-2    X 1-2  SBAS1-2   MAG1     MAG2  TBL  R 1-2    X 1-2
583917 G14-021-GEN20.6900  1               1 F F 2 1  0.00600  0.04802  100.0  0.00000  0.00000  0

X------- TO BUS --------X     C
  BUS# X-- NAME --X BASKV CKT W  WINDV1  NOMV1  ANGLE  WINDV2  NOMV2  RATEA  RATEB  RATEC OWN1 FRAC1 OWN2 FRAC2 OWN3 FRAC3 OWN4 FRAC4
583917 G14-021-GEN20.6900  1  1 1.00000 0.0000    0.0 1.00000 0.0000  142.0  142.0  142.0    1 1.000

X------- TO BUS --------X     W C                                       X---- CONTROLLED BUS ----X CONECXN
  BUS# X-- NAME --X BASKV CKT 1 W CN   RMAX    RMIN    VMAX    VMIN  NTPS    BUS# X-- NAME --X BASKV   ANGLE    CR      CX
583917 G14-021-GEN20.6900  1  F 1  0 1.10000 0.90000 1.10000 0.90000    5                               0.000


DATA FOR BUS 583913 [G14-021-GEN10.6900] RESIDING IN AREA    1, ZONE    1, OWNER    1:

CODE P Q - L O A D     I - L O A D     Y - L O A D G-SHUNT B-SHUNT VOLTAGE  ANGLE
-2     0.0     0.0     0.0     0.0     0.0     0.0     0.0     0.0 1.03960   0.24
```

```
                                                X--------- REMOTE BUS ----------X
PLNT PGEN    QGEN    QMAX    QMIN  VSCHED  PCT Q   BUS# X-- NAME --X BASKV VOLTAGE
    158.0     0.0    51.9   -51.9 1.00000 100.00

ID ST  PGEN   QGEN   QMAX   QMIN  MBASE  Z S O R C E    X T R A N   GENTAP   PMAX   PMIN OWN1 FRAC1 OWN2 FRAC2 OWN3 FRAC3 OWN4 FRAC4 WMOD   WPF
1  1  158.0    0.0   51.9  -51.9  166.3 0.0000 0.8000 0.0000 0.0000 1.0000  158.0    0.0    1 1.000

X------- TO BUS --------X        XFRMER    S W M C C      SPECIFIED              MAGNETIZING Y        TBL CORRECTED
  BUS# X-- NAME --X BASKV CKT X-- NAME --X T 1 T Z M   R 1-2    X 1-2  SBAS1-2   MAG1     MAG2  TBL  R 1-2    X 1-2
583912 G14-021-GSU134.500  1               1 T T 2 1  0.00539  0.04315  100.0  0.00000  0.00000  0

X------- TO BUS --------X     C
  BUS# X-- NAME --X BASKV CKT W  WINDV1  NOMV1  ANGLE  WINDV2  NOMV2  RATEA  RATEB  RATEC OWN1 FRAC1 OWN2 FRAC2 OWN3 FRAC3 OWN4 FRAC4
583912 G14-021-GSU134.500  1  1 1.00000 0.0000    0.0 1.00000 0.0000  158.0  158.0  158.0    1 1.000

X------- TO BUS --------X     W C                                        X---- CONTROLLED BUS ----X CONECXN
  BUS# X-- NAME --X BASKV CKT 1 W CN   RMAX    RMIN    VMAX    VMIN  NTPS    BUS# X-- NAME --X BASKV   ANGLE    CR      CX
583912 G14-021-GSU134.500  1  T 1  0 1.10000 0.90000 1.10000 0.90000    5                              0.000


DATA FOR BUS 583917 [G14-021-GEN20.6900] RESIDING IN AREA    1, ZONE    1, OWNER    1:

CODE P Q - L O A D     I - L O A D     Y - L O A D G-SHUNT B-SHUNT VOLTAGE  ANGLE
-2     0.0     0.0     0.0     0.0     0.0     0.0     0.0     0.0 1.03980   0.47

                                                X--------- REMOTE BUS ----------X
PLNT PGEN    QGEN    QMAX    QMIN  VSCHED  PCT Q   BUS# X-- NAME --X BASKV VOLTAGE
    142.0     0.0    46.7   -46.7 1.00000 100.00

ID ST  PGEN   QGEN   QMAX   QMIN  MBASE  Z S O R C E    X T R A N   GENTAP   PMAX   PMIN OWN1 FRAC1 OWN2 FRAC2 OWN3 FRAC3 OWN4 FRAC4 WMOD   WPF
1  1  142.0    0.0   46.7  -46.7  149.5 0.0000 0.8000 0.0000 0.0000 1.0000  142.0    0.0    1 1.000

X------- TO BUS --------X        XFRMER    S W M C C      SPECIFIED              MAGNETIZING Y        TBL CORRECTED
  BUS# X-- NAME --X BASKV CKT X-- NAME --X T 1 T Z M   R 1-2    X 1-2  SBAS1-2   MAG1     MAG2  TBL  R 1-2    X 1-2
583916 G14-021-GSU234.500  1               1 T T 2 1  0.00600  0.04802  100.0  0.00000  0.00000  0

X------- TO BUS --------X     C
  BUS# X-- NAME --X BASKV CKT W  WINDV1  NOMV1  ANGLE  WINDV2  NOMV2  RATEA  RATEB  RATEC OWN1 FRAC1 OWN2 FRAC2 OWN3 FRAC3 OWN4 FRAC4
583916 G14-021-GSU234.500  1  1 1.00000 0.0000    0.0 1.00000 0.0000  142.0  142.0  142.0    1 1.000

X------- TO BUS --------X     W C                                        X---- CONTROLLED BUS ----X CONECXN
  BUS# X-- NAME --X BASKV CKT 1 W CN   RMAX    RMIN    VMAX    VMIN  NTPS    BUS# X-- NAME --X BASKV   ANGLE    CR      CX
583916 G14-021-GSU234.500  1  T 1  0 1.10000 0.90000 1.10000 0.90000    5                              0.000

--------------------------------------------------------------------------------
```

PSS®E Activity SQEX

```
DATA FOR BUS 560009 [G14-021-TAP 345.00] RESIDING IN AREA  540, ZONE  596, OWNER  540:

 CODE   ZERO SEQ LOAD      NEG SEQ LOAD
   1   0.0000   0.0000   0.0000   0.0000

 X------- TO BUS --------X     X- POS AND NEG SEQUENCE -X X---- ZERO SEQUENCE -----X
   BUS# X-- NAME --X BASKV CKT   LINE R   LINE X CHARGING   LINE R   LINE X CHARGING ST ZI
  65358 S3458  3    345.00  1   0.00205  0.03007  0.57599  0.02007  0.08923  0.30721  1
 541197 SMARYVL7    345.00  1   0.00045  0.00660  0.12644  0.00441  0.01959  0.06744  1
 583910 GEN-2014-021345.00  1   0.00129  0.00829  0.08777  0.00775  0.02361  0.00000  1

 X------ FROM BUS -------X X------- TO BUS --------X
   BUS# X-- NAME --X BASKV   BUS# X-- NAME --X BASKV CKT  MUTUAL IMPEDANCE    B1     B2
  59393 STJOE7      345.00  64786 COOPER 3    345.00  1   -0.0027  -0.0043  0.1800 1.0000
  65358 S3458  3    345.00 560009 G14-021-TAP 345.00  1                     0.0000 1.0000
  59393 STJOE7      345.00  64786 COOPER 3    345.00  1    0.0006   0.0010  0.0000 0.1800
 541197 SMARYVL7    345.00 560009 G14-021-TAP 345.00  1                     0.0000 1.0000
  64786 COOPER 3    345.00  96039 7FAIRPT     345.00  1    0.0003   0.0006  0.0000 0.8200
  65358 S3458  3    345.00 560009 G14-021-TAP 345.00  1                     0.0000 1.0000
  64786 COOPER 3    345.00  96039 7FAIRPT     345.00  1   -0.0001  -0.0001  0.8200 1.0000
 541197 SMARYVL7    345.00 560009 G14-021-TAP 345.00  1                     0.0000 1.0000
  64787 COOPER 5    161.00  65480 S1280  5    161.00  1    0.0015   0.0025  0.0000 0.8200
  65358 S3458  3    345.00 560009 G14-021-TAP 345.00  1                     0.0000 1.0000
  64787 COOPER 5    161.00  65480 S1280  5    161.00  1   -0.0003  -0.0005  0.8200 1.0000
 541197 SMARYVL7    345.00 560009 G14-021-TAP 345.00  1                     0.0000 1.0000


 DATA FOR BUS 583910 [GEN-2014-021345.00] RESIDING IN AREA  540, ZONE  596, OWNER  540:

 CODE   ZERO SEQ LOAD      NEG SEQ LOAD
   1   0.0000   0.0000   0.0000   0.0000

 X------- TO BUS --------X     X- POS AND NEG SEQUENCE -X X---- ZERO SEQUENCE -----X
   BUS# X-- NAME --X BASKV CKT   LINE R   LINE X CHARGING   LINE R   LINE X CHARGING ST ZI
 560009 G14-021-TAP 345.00  1   0.00129  0.00829  0.08777  0.00775  0.02361  0.00000  1
 583914 G14-021-HV-1345.00  1   0.00040  0.00255  0.02701  0.00238  0.00726  0.00000  1

 X------- TO BUS --------X     S W C X--------- ZERO SEQUENCE ---------X X-- POS & NEG --X   MAGNETIZING Y   X--WINDING 1-X WINDNG2    X-- POS & NEG --X
   BUS# X-- NAME --X BASKV CKT T 1 C     R        X     RGROUND  XGROUND     R        X        G        B     RATIO   ANGLE  RATIO TAB     NOMINAL R,X
 583911 G14-021XFMR134.500  1  1 F 2  0.00159  0.06186  0.00000  0.00000  0.00187  0.07278  0.00000  0.00000 1.00000    0.0 1.00000  0


 DATA FOR BUS 583911 [G14-021XFMR134.500] RESIDING IN AREA    1, ZONE    1, OWNER    1:

 CODE   ZERO SEQ LOAD      NEG SEQ LOAD
   1   0.0000   0.0000   0.0000   0.0000

 X------- TO BUS --------X     X- POS AND NEG SEQUENCE -X X---- ZERO SEQUENCE -----X
   BUS# X-- NAME --X BASKV CKT   LINE R   LINE X CHARGING   LINE R   LINE X CHARGING ST ZI
 583912 G14-021-GSU134.500  1   0.00259  0.00583  0.08247  0.04614  0.02444  0.00000  1
```

```
X------- TO BUS --------X     S W C X--------- ZERO SEQUENCE ---------X X-- POS & NEG --X   MAGNETIZING Y   X--WINDING 1-X WINDNG2    X-- POS & NEG --X
  BUS# X-- NAME --X BASKV CKT T 1 C     R        X     RGROUND  XGROUND     R        X        G        B     RATIO   ANGLE  RATIO TAB     NOMINAL R,X
583910 GEN-2014-021345.00  1  1 T 2  0.00159  0.06186  0.00000  0.00000  0.00187  0.07278  0.00000  0.00000 1.00000    0.0 1.00000  0


DATA FOR BUS 583914 [G14-021-HV-1345.00] RESIDING IN AREA  540, ZONE  596, OWNER  540:

CODE   ZERO SEQ LOAD      NEG SEQ LOAD
  1   0.0000   0.0000   0.0000   0.0000

X------- TO BUS --------X     X- POS AND NEG SEQUENCE -X X---- ZERO SEQUENCE -----X
  BUS# X-- NAME --X BASKV CKT   LINE R   LINE X CHARGING   LINE R   LINE X CHARGING ST ZI
583910 GEN-2014-021345.00  1   0.00040  0.00255  0.02701  0.00238  0.00726  0.00000  1

X------- TO BUS --------X     S W C X--------- ZERO SEQUENCE ---------X X-- POS & NEG --X   MAGNETIZING Y   X--WINDING 1-X WINDNG2    X-- POS & NEG --X
  BUS# X-- NAME --X BASKV CKT T 1 C     R        X     RGROUND  XGROUND     R        X        G        B     RATIO   ANGLE  RATIO TAB     NOMINAL R,X
583915 G14-021XFMR234.500  1  1 F 2  0.00186  0.06887  0.00000  0.00000  0.00219  0.08103  0.00000  0.00000 1.00000    0.0 1.00000  0


DATA FOR BUS 583912 [G14-021-GSU134.500] RESIDING IN AREA    1, ZONE    1, OWNER    1:

CODE   ZERO SEQ LOAD      NEG SEQ LOAD
  1   0.0000   0.0000   0.0000   0.0000

X------- TO BUS --------X     X- POS AND NEG SEQUENCE -X X---- ZERO SEQUENCE -----X
  BUS# X-- NAME --X BASKV CKT   LINE R   LINE X CHARGING   LINE R   LINE X CHARGING ST ZI
583911 G14-021XFMR134.500  1   0.00259  0.00583  0.08247  0.04614  0.02444  0.00000  1

X------- TO BUS --------X     S W C X--------- ZERO SEQUENCE ---------X X-- POS & NEG --X   MAGNETIZING Y   X--WINDING 1-X WINDNG2    X-- POS & NEG --X
  BUS# X-- NAME --X BASKV CKT T 1 C     R        X     RGROUND  XGROUND     R        X        G        B     RATIO   ANGLE  RATIO TAB     NOMINAL R,X
583913 G14-021-GEN10.6900  1  1 F 3  0.00539  0.04315  0.00000  0.00000  0.00539  0.04315  0.00000  0.00000 1.00000    0.0 1.00000  0


DATA FOR BUS 583915 [G14-021XFMR234.500] RESIDING IN AREA    1, ZONE    1, OWNER    1:

CODE   ZERO SEQ LOAD      NEG SEQ LOAD
  1   0.0000   0.0000   0.0000   0.0000

X------- TO BUS --------X     X- POS AND NEG SEQUENCE -X X---- ZERO SEQUENCE -----X
  BUS# X-- NAME --X BASKV CKT   LINE R   LINE X CHARGING   LINE R   LINE X CHARGING ST ZI
583916 G14-021-GSU234.500  1   0.00271  0.00611  0.07493  0.04834  0.02561  0.00000  1

X------- TO BUS --------X     S W C X--------- ZERO SEQUENCE ---------X X-- POS & NEG --X   MAGNETIZING Y   X--WINDING 1-X WINDNG2    X-- POS & NEG --X
  BUS# X-- NAME --X BASKV CKT T 1 C     R        X     RGROUND  XGROUND     R        X        G        B     RATIO   ANGLE  RATIO TAB     NOMINAL R,X
583914 G14-021-HV-1345.00  1  1 T 2  0.00186  0.06887  0.00000  0.00000  0.00219  0.08103  0.00000  0.00000 1.00000    0.0 1.00000  0


DATA FOR BUS 583916 [G14-021-GSU234.500] RESIDING IN AREA    1, ZONE    1, OWNER    1:

CODE   ZERO SEQ LOAD      NEG SEQ LOAD
  1   0.0000   0.0000   0.0000   0.0000
```

```
X------- TO BUS --------X     X- POS AND NEG SEQUENCE -X X---- ZERO SEQUENCE -----X
  BUS# X-- NAME --X BASKV CKT   LINE R   LINE X CHARGING   LINE R   LINE X CHARGING ST ZI
583915 G14-021XFMR234.500  1   0.00271  0.00611  0.07493  0.04834  0.02561  0.00000  1

X------- TO BUS --------X     S W C X--------- ZERO SEQUENCE ---------X X-- POS & NEG --X   MAGNETIZING Y   X--WINDING 1-X WINDNG2    X-- POS & NEG --X
  BUS# X-- NAME --X BASKV CKT T 1 C     R        X     RGROUND  XGROUND     R        X        G        B     RATIO   ANGLE  RATIO TAB     NOMINAL R,X
583917 G14-021-GEN20.6900  1  1 F 3  0.00600  0.04802  0.00000  0.00000  0.00600  0.04802  0.00000  0.00000 1.00000    0.0 1.00000  0


DATA FOR BUS 583913 [G14-021-GEN10.6900] RESIDING IN AREA    1, ZONE    1, OWNER    1:

CODE   ZERO SEQ LOAD      NEG SEQ LOAD
 -2   0.0000   0.0000   0.0000   0.0000

ID ST MBASE   ZGEN (POS.)    ZGEN (NEG.)    ZGEN (ZERO)     X T R A N   GENTAP
1  1  166.3  0.0000 0.1991  0.0000 0.1991  0.0000 0.0000  0.0000 0.0000 1.0000

X------- TO BUS --------X     S W C X--------- ZERO SEQUENCE ---------X X-- POS & NEG --X   MAGNETIZING Y   X--WINDING 1-X WINDNG2    X-- POS & NEG --X
  BUS# X-- NAME --X BASKV CKT T 1 C     R        X     RGROUND  XGROUND     R        X        G        B     RATIO   ANGLE  RATIO TAB     NOMINAL R,X
583912 G14-021-GSU134.500  1  1 T 3  0.00539  0.04315  0.00000  0.00000  0.00539  0.04315  0.00000  0.00000 1.00000    0.0 1.00000  0


DATA FOR BUS 583917 [G14-021-GEN20.6900] RESIDING IN AREA    1, ZONE    1, OWNER    1:

CODE   ZERO SEQ LOAD      NEG SEQ LOAD
 -2   0.0000   0.0000   0.0000   0.0000

ID ST MBASE   ZGEN (POS.)    ZGEN (NEG.)    ZGEN (ZERO)     X T R A N   GENTAP
1  1  149.5  0.0000 0.1991  0.0000 0.1991  0.0000 0.0000  0.0000 0.0000 1.0000

X------- TO BUS --------X     S W C X--------- ZERO SEQUENCE ---------X X-- POS & NEG --X   MAGNETIZING Y   X--WINDING 1-X WINDNG2    X-- POS & NEG --X
  BUS# X-- NAME --X BASKV CKT T 1 C     R        X     RGROUND  XGROUND     R        X        G        B     RATIO   ANGLE  RATIO TAB     NOMINAL R,X
583916 G14-021-GSU234.500  1  1 T 3  0.00600  0.04802  0.00000  0.00000  0.00600  0.04802  0.00000  0.00000 1.00000    0.0 1.00000  0
```

Appendix B. Full Substation Fault Current (kA) Comparison

B.1 Two Cycle Breaker

Bus		Fault Current (kA) without GEN-2014-021		Fault Current (kA) with GEN-2014-021		Fault Current Increase (kA) with GEN-2014-021	
Rated Interrupting Time		2-cycles		2-cycles		2-cycles	
Contact Parting Time		1.5-Cycles		1.5-Cycles		1.5-Cycles	
Bus #	Bus Name	Total [1]	Symm [2]	Total [1]	Symm [2]	Total [1]	Symm [2]
65036	MOORE Y 345.00	249.414	246.400	258.532	255.517	9.118	9.117
560009	G14-021-TAP 345.00	0.000	0.000	11.098	8.740	11.098	8.740
583910	GEN-2014-021345.00	0.000	0.000	8.896	7.141	8.896	7.141
583914	G14-021-HV-1345.00	0.000	0.000	8.054	6.561	8.054	6.561
65780	WAGENR1Y 345.00	111.738	108.400	113.442	110.103	1.704	1.703
541197	SMARYVL7 345.00	8.807	7.026	9.984	7.919	1.177	0.893
65358	S3458 3 345.00	41.864	32.530	42.529	33.055	0.665	0.526
541357	SMARYVL2 69.000	12.649	9.824	13.084	10.162	0.435	0.338
65392	S3455T3T 345.00	56.692	51.125	56.873	51.323	0.181	0.198
59201	SIBLEY 7 345.00	29.228	22.697	29.474	22.880	0.246	0.183
64786	COOPER 3 345.00	38.168	29.699	38.311	29.807	0.143	0.108
65337	S3455T1T 345.00	42.727	36.859	42.824	36.965	0.097	0.106
57976	LEVEE 5 161.00	77.488	60.299	77.611	60.395	0.123	0.096
65356	S3456 3 345.00	46.943	36.605	47.064	36.701	0.121	0.095
57972	HAWTH 7 345.00	36.311	28.263	36.416	28.345	0.105	0.082
57973	HAWTHRN5 161.00	99.095	76.970	99.247	77.052	0.152	0.082
65455	S1255 5 161.00	58.310	45.271	58.395	45.349	0.085	0.078
65355	S3455 3 345.00	41.194	31.989	41.304	32.064	0.110	0.075
59202	SIBLEY 5 161.00	43.767	34.063	43.848	34.129	0.081	0.065
65360	S3740 3 345.00	25.571	19.941	25.651	20.004	0.080	0.063
65789	SELINC 3 345.00	23.657	19.223	23.714	19.284	0.057	0.061
59198	SIBLEYP5 161.00	49.599	38.503	49.670	38.561	0.071	0.058
57989	NAVY 5 161.00	75.109	59.574	75.161	59.631	0.052	0.057
58005	MLTSPJT5 161.00	54.538	42.505	54.596	42.558	0.058	0.053
65354	S3454 3 345.00	33.752	26.420	33.813	26.473	0.061	0.053
58000	BLUEVLY5 161.00	54.214	42.347	54.271	42.399	0.057	0.053
57987	GRAND 5 161.00	82.944	64.534	83.012	64.586	0.068	0.052

58003	MLTSP2 5 161.00	46.308	37.963	46.355	38.014	0.047	0.051
65431	S1231 5 161.00	48.381	40.391	48.426	40.440	0.045	0.049
65786	WAGENER3 345.00	23.945	19.296	23.991	19.345	0.046	0.049
57985	NEAST 5 161.00	78.611	61.291	78.673	61.339	0.062	0.048
64902	MOORE 3 345.00	25.008	19.718	25.049	19.763	0.041	0.045
58011	CHOUTEU5 161.00	47.332	37.328	47.372	37.372	0.040	0.044
63800	CBLUFFS3 345.00	49.225	38.227	49.269	38.269	0.044	0.042
65459	S1259 5 161.00	39.869	33.272	39.907	33.313	0.038	0.041
635013	PONYCKA3 345.00	42.542	33.108	42.594	33.148	0.052	0.040
58027	RANDLPH5 161.00	43.249	35.039	43.287	35.079	0.038	0.040
635020	ATCHSNT3 345.00	21.628	17.433	21.663	17.471	0.035	0.038
59200	PLSHILL7 345.00	25.483	19.875	25.533	19.912	0.050	0.038
65421	S1221 5 161.00	38.503	33.514	38.537	33.551	0.034	0.037
57990	CROSTWN5 161.00	49.975	47.653	50.011	47.690	0.036	0.037
635019	ATCHSN 3 345.00	21.456	17.309	21.490	17.346	0.034	0.037
65409	S1209 5 161.00	52.578	41.045	52.620	41.082	0.042	0.037
65359	S3459 3 345.00	32.132	24.956	32.172	24.992	0.040	0.036
57969	STILWEL5 161.00	54.975	43.123	55.007	43.157	0.032	0.034
65406	S1206 5 161.00	65.405	50.885	65.449	50.919	0.044	0.033
65339	S3459T3T 345.00	29.173	23.524	29.202	23.556	0.029	0.032
65454	S1254 5 161.00	37.788	29.350	37.823	29.382	0.035	0.031
65351	S3451 3 345.00	31.879	24.749	31.913	24.780	0.034	0.030
58018	NKANCTY5 161.00	41.755	33.296	41.781	33.325	0.026	0.029
65435	S1235 5 161.00	34.111	29.765	34.138	29.794	0.027	0.029
57997	LEEDS 5 161.00	37.431	30.690	37.458	30.719	0.027	0.029
65411	S1211 5 161.00	52.288	40.592	52.319	40.620	0.031	0.028
65417	S1217 5 161.00	40.474	33.290	40.499	33.318	0.025	0.028
65427	S1227 5 161.00	37.625	31.902	37.650	31.930	0.025	0.028
58020	BRMGHAM5 161.00	30.562	28.050	30.588	28.078	0.026	0.028
63801	CBLUFFS5 161.00	55.160	43.011	55.194	43.039	0.034	0.027
65433	S1233 5 161.00	31.484	27.223	31.510	27.250	0.026	0.027
65450	S1250 5 161.00	42.022	35.894	42.046	35.920	0.024	0.026
58015	AVONDAL5 161.00	36.183	30.161	36.207	30.187	0.024	0.026
59393	STJOE7 345.00	21.577	17.733	21.600	17.759	0.023	0.026
59808	ECKLRD 161.00	32.509	26.757	32.533	26.783	0.024	0.026
65460	S1260 5 161.00	29.469	25.971	29.492	25.996	0.023	0.025
65416	S1216 5 161.00	38.089	30.755	38.111	30.779	0.022	0.024
65478	S1278 5 161.00	29.088	26.034	29.110	26.058	0.022	0.024
57968	STILWEL7 345.00	29.705	23.489	29.728	23.513	0.023	0.024
65720	NW68HOL3 345.00	17.723	14.466	17.745	14.490	0.022	0.024

65481	S1281 5 161.00	29.763	25.417	29.785	25.441	0.022	0.024
65401	S1201 5 161.00	39.546	32.917	39.566	32.939	0.020	0.022
59225	PLSHIL 5 161.00	50.947	39.567	50.973	39.588	0.026	0.022
65432	S1232 5 161.00	30.273	26.898	30.292	26.919	0.019	0.021
65434	S1234 5 161.00	28.165	24.776	28.185	24.797	0.020	0.021
57993	STHTOWN5 161.00	36.764	32.220	36.782	32.241	0.018	0.021
57978	CRAIG 5 161.00	52.238	41.343	52.257	41.364	0.019	0.021
65767	84&LEIG7 115.00	36.484	29.412	36.503	29.432	0.019	0.020
65429	S1229 5 161.00	35.104	29.514	35.121	29.533	0.017	0.019
65449	S1249 5 161.00	26.784	22.639	26.801	22.658	0.017	0.019
65453	S1253 5 161.00	27.417	24.364	27.435	24.383	0.018	0.019
65498	S1298 5 161.00	39.879	30.980	39.899	30.998	0.020	0.018
65410	S1210 5 161.00	33.404	28.461	33.421	28.479	0.017	0.018
65457	S1357 5 161.00	29.384	26.984	29.400	27.002	0.016	0.018
64787	COOPER 5 161.00	30.208	23.470	30.231	23.488	0.023	0.018
65670	FC1A 5 161.00	42.360	32.908	42.386	32.925	0.026	0.017
65420	S1220 5 161.00	34.641	29.543	34.656	29.560	0.015	0.017
65422	S1222 5 161.00	32.908	28.066	32.924	28.083	0.016	0.017
65451	S1251 5 161.00	46.557	36.295	46.578	36.311	0.021	0.017
65334	S3451T3T 345.00	24.639	19.151	24.657	19.167	0.018	0.016
65336	S1254T1T 345.00	20.687	16.061	20.708	16.078	0.021	0.016
65456	S1256 5 161.00	23.593	20.973	23.607	20.989	0.014	0.016
65441	S1341 5 161.00	37.356	29.106	37.373	29.122	0.017	0.016
65405	S1305 5 161.00	37.863	29.497	37.881	29.513	0.018	0.016
65486	S1286 5 161.00	32.096	27.593	32.109	27.608	0.013	0.015
65499	S1299 5 161.00	34.651	29.340	34.665	29.355	0.014	0.015
58639	LEEDREAC 161.00	28.035	23.229	28.049	23.244	0.014	0.015
65770	70&CAL 7 115.00	31.297	26.793	31.311	26.808	0.014	0.015
65784	84&FLET7 115.00	32.045	26.203	32.058	26.218	0.013	0.015
65426	S1226 5 161.00	29.455	25.166	29.468	25.180	0.013	0.014
59248	LBRTYST5 161.00	21.888	20.383	21.901	20.397	0.013	0.014
65738	20&PIO 7 115.00	29.479	26.044	29.491	26.058	0.012	0.014
65335	S3451T4T 345.00	24.675	19.181	24.694	19.194	0.019	0.014
65444	S1244 5 161.00	26.076	22.508	26.088	22.521	0.012	0.013
65730	2&N 7 115.00	29.391	25.403	29.403	25.416	0.012	0.013
65771	81&OC 7 115.00	28.650	24.182	28.662	24.195	0.012	0.013
96039	7FAIRPT 345.00	14.239	12.168	14.251	12.181	0.012	0.013
65443	S1343 5 161.00	30.694	26.536	30.707	26.549	0.013	0.013
64621	RAUN MD5 161.00	138.080	118.105	138.093	118.118	0.013	0.013
96098	5MOCITY 161.00	28.286	22.032	28.301	22.044	0.015	0.012

59205	BLSPE 5 161.00	23.453	20.551	23.465	20.563	0.012	0.012
59235	DUNCNRD5 161.00	22.842	19.717	22.854	19.729	0.012	0.012
65758	40&GER 7 115.00	26.018	23.520	26.028	23.532	0.010	0.012
65762	57&GAR 7 115.00	27.703	24.143	27.715	24.155	0.012	0.012
65714	NW68HOL7 115.00	32.882	25.694	32.896	25.705	0.014	0.011
646367	S1367 5 161.00	20.884	18.874	20.894	18.885	0.010	0.011
59804	SUB E 69.000	33.718	29.333	33.728	29.344	0.010	0.011
65436	S1236 5 161.00	20.182	18.204	20.191	18.215	0.009	0.011
65452	S1252 5 161.00	22.245	20.081	22.255	20.092	0.010	0.011
65487	S1287 5 161.00	20.077	18.160	20.088	18.171	0.011	0.011
58002	MARTCIT5 161.00	26.156	23.264	26.166	23.275	0.010	0.011
58010	WINJT S5 161.00	23.430	20.785	23.441	20.796	0.011	0.011
58053	REDEL 5 161.00	28.325	24.837	28.336	24.848	0.011	0.011
58638	MDTNREAC 161.00	28.060	23.678	28.070	23.689	0.010	0.011
65717	8&N 7 115.00	26.477	23.197	26.488	23.208	0.011	0.011
65773	93&O 7 115.00	24.583	22.122	24.593	22.133	0.010	0.011
65783	WAVERLY7 115.00	26.986	21.745	26.996	21.756	0.010	0.011
57982	IATAN 7 345.00	27.461	21.323	27.474	21.334	0.013	0.011
65448	S1248 5 161.00	23.096	21.305	23.106	21.315	0.010	0.010
58007	SWOPE S5 161.00	22.017	19.494	22.026	19.504	0.009	0.010
59249	HOOKRD 5 161.00	26.906	21.540	26.916	21.550	0.010	0.010
59825	STRLJCT2 69.000	33.519	28.072	33.528	28.082	0.009	0.010
65708	WLINC 7 115.00	24.878	22.168	24.888	22.178	0.010	0.010
59244	ORRICK 5 161.00	16.028	15.171	16.037	15.181	0.009	0.010
65437	S1237 5 161.00	19.730	17.879	19.739	17.889	0.009	0.010
65713	SW20&F 7 115.00	26.063	22.228	26.072	22.238	0.009	0.010
65772	91&A 7 115.00	24.061	21.757	24.070	21.767	0.009	0.010
59243	LKWINN 5 161.00	31.248	24.325	31.259	24.334	0.011	0.009
57977	CRAIG 7 345.00	25.798	20.316	25.806	20.325	0.008	0.009
58009	WINJT N5 161.00	20.149	17.637	20.157	17.646	0.008	0.009
58016	GLADSTN5 161.00	20.391	17.869	20.399	17.878	0.008	0.009
58050	ANTIOCH5 161.00	26.997	23.651	27.006	23.660	0.009	0.009
59814	SUB M 161.00	19.906	16.498	19.914	16.507	0.008	0.009
63810	SUB701 5 161.00	24.986	21.759	24.994	21.768	0.008	0.009
63817	BUNGE 5 161.00	23.873	22.718	23.882	22.727	0.009	0.009
63856	MANAWA 5 161.00	26.333	22.617	26.342	22.626	0.009	0.009
64635	SYCMID15 161.00	61.447	48.746	61.453	48.755	0.006	0.009
65718	3&VAND 7 115.00	24.035	22.037	24.044	22.046	0.009	0.009
65775	84&BLUF7 115.00	39.160	30.543	39.172	30.552	0.012	0.009
65600	S906 N 8 69.000	45.080	34.995	45.087	35.004	0.007	0.008

59218	GREWOD 5 161.00	33.165	25.826	33.177	25.834	0.012	0.008
58021	RIVRSID5 161.00	21.193	18.397	21.200	18.405	0.007	0.008
65445	S1345 5 161.00	17.227	15.683	17.234	15.691	0.007	0.008
65497	S1297 5 161.00	21.973	19.294	21.980	19.302	0.007	0.008
65509	S909 8 69.000	35.419	27.832	35.427	27.840	0.008	0.008
65521	S921 8 69.000	32.192	26.320	32.200	26.328	0.008	0.008
58006	SWOPE N5 161.00	18.787	16.552	18.794	16.560	0.007	0.008
59233	LSUMITE5 161.00	24.356	19.596	24.364	19.604	0.008	0.008
63812	SUB702 5 161.00	24.429	21.261	24.437	21.269	0.008	0.008
64959	SHELDON7 115.00	43.790	34.153	43.801	34.160	0.011	0.007
57981	LACYGNE7 345.00	45.611	35.414	45.619	35.421	0.008	0.007
65383	S1209T1T 161.00	23.166	17.986	23.172	17.993	0.006	0.007
65517	S917 8 69.000	33.417	26.172	33.424	26.179	0.007	0.007
57994	HICKMAN5 161.00	21.502	19.174	21.508	19.181	0.006	0.007
65774	91&HWY27 115.00	21.707	18.386	21.713	18.393	0.006	0.007
58004	BLUMILS5 161.00	17.562	14.865	17.569	14.872	0.007	0.007
58023	CLAYCM25 161.00	15.500	14.250	15.506	14.257	0.006	0.007
646366	S1366 5 161.00	18.410	16.373	18.417	16.380	0.007	0.007
58046	OXFORD 5 161.00	24.252	21.405	24.258	21.412	0.006	0.007
58057	BUCYRUS5 161.00	23.851	20.608	23.858	20.615	0.007	0.007
65751	30&A SO7 115.00	19.822	18.713	19.829	18.720	0.007	0.007
65781	WAGENR2Y 345.00	12.547	9.773	12.556	9.780	0.009	0.007
56772	STRANGR7 345.00	25.872	20.211	25.879	20.218	0.007	0.007
65601	S906 S 8 69.000	45.824	35.726	45.832	35.733	0.008	0.006
65516	S916 8 69.000	27.179	23.968	27.185	23.974	0.006	0.006
65538	S938 8 69.000	26.095	24.286	26.101	24.292	0.006	0.006
31408	OVERTON 345.00	12.343	10.604	12.349	10.610	0.006	0.006
65710	NW40&AL7 115.00	19.850	16.755	19.855	16.761	0.005	0.006
96076	5FAIRPT 161.00	21.852	17.226	21.858	17.232	0.006	0.006
59807	BVINDP 161.00	20.034	15.620	20.041	15.626	0.007	0.006
59802	SUB H 69.000	35.984	28.048	35.990	28.054	0.006	0.005
64623	RAUNMID5 161.00	90.977	70.742	90.983	70.747	0.006	0.005
65530	S930 8 69.000	23.935	22.194	23.939	22.199	0.004	0.005
57998	LVISTAE5 161.00	14.957	13.273	14.962	13.278	0.005	0.005
59215	HALMRK 5 161.00	14.193	13.173	14.198	13.178	0.005	0.005
64896	MCCOOL 3 345.00	11.681	10.040	11.686	10.045	0.005	0.005
65414	S1214 5 161.00	12.831	11.791	12.835	11.796	0.004	0.005
65512	S912 8 69.000	25.340	22.928	25.344	22.933	0.004	0.005
65518	S918 8 69.000	24.842	23.338	24.847	23.343	0.005	0.005
65519	S919 8 69.000	25.636	22.869	25.640	22.874	0.004	0.005

65524	S924 8 69.000	27.817	24.613	27.822	24.618	0.005	0.005
59247	LIBTYW 5 161.00	15.082	13.932	15.087	13.937	0.005	0.005
65785	WAGENER7 115.00	42.979	33.386	43.011	33.390	0.032	0.005
57966	WGARDNR5 161.00	41.886	32.538	41.893	32.543	0.007	0.004
65385	S1211T1T 69.000	41.761	32.569	41.765	32.573	0.004	0.004
65387	S1217T1T 161.00	15.920	12.405	15.923	12.409	0.003	0.004
65501	S901 8 69.000	37.551	29.396	37.555	29.400	0.004	0.004
57965	W.GRDNR7 345.00	24.404	19.028	24.411	19.032	0.007	0.004
65540	S940 8 69.000	23.315	21.016	23.320	21.020	0.005	0.004
65594	S994 8 69.000	20.504	19.064	20.508	19.068	0.004	0.004
647866	S6866 8 69.000	25.452	21.572	25.456	21.576	0.004	0.004
65384	S1210T7T 161.00	17.585	14.789	17.588	14.793	0.003	0.004
65480	S1280 5 161.00	12.212	10.568	12.215	10.572	0.003	0.004
59207	ARCHIE 5 161.00	17.492	15.718	17.495	15.722	0.003	0.004
65510	S910 8 69.000	31.596	27.024	31.601	27.028	0.005	0.004
65539	S939 8 69.000	22.767	20.623	22.770	20.627	0.003	0.004
65621	JCT205 8 69.000	25.591	22.803	25.594	22.807	0.003	0.004
65330	SARP4&5T 161.00	25.362	19.696	25.367	19.700	0.005	0.004
65382	S1206T2T 161.00	21.472	16.713	21.476	16.717	0.004	0.004
65381	S1206T1T 161.00	22.955	17.827	22.959	17.831	0.004	0.004
63875	RAUN 3 345.00	41.062	31.892	41.065	31.895	0.003	0.004
64050	SE POLK3 345.00	30.448	23.740	30.451	23.743	0.003	0.003
64636	SYCMID25 161.00	54.452	42.362	54.456	42.365	0.004	0.003
64606	CB2 MID8 69.000	34.380	26.717	34.383	26.720	0.003	0.003
63803	CBLUFFS8 69.000	34.673	26.936	34.677	26.939	0.004	0.003
64607	CB3 MID8 69.000	35.130	27.273	35.134	27.276	0.004	0.003
65511	S911 8 69.000	38.073	29.559	38.077	29.562	0.004	0.003
64060	BOONVIL3 345.00	24.608	19.243	24.611	19.246	0.003	0.003
64198	GRIMES 3 345.00	25.629	20.052	25.632	20.055	0.003	0.003
65507	S907 8 69.000	23.272	20.657	23.275	20.660	0.003	0.003
65508	S908 8 69.000	21.375	19.719	21.378	19.722	0.003	0.003
65523	S923 8 69.000	21.163	19.402	21.166	19.405	0.003	0.003
65528	S928 8 69.000	16.589	15.885	16.592	15.888	0.003	0.003
65605	915TP3 8 69.000	17.012	15.957	17.014	15.960	0.002	0.003
31088	MCCREDIE 345.00	19.015	15.947	19.018	15.950	0.003	0.003
31409	OVERTON 161.00	19.602	16.397	19.605	16.400	0.003	0.003
57999	LVISTAW5 161.00	15.422	13.857	15.425	13.860	0.003	0.003
58068	WAGSTAF5 161.00	16.419	14.234	16.422	14.237	0.003	0.003
58082	HAWTHJT2 69.000	15.170	14.775	15.173	14.778	0.003	0.003
59184	LONEJK 5 161.00	15.321	12.583	15.324	12.586	0.003	0.003

59221	PLTCTY 5 161.00	15.736	13.873	15.739	13.876	0.003	0.003
59239	HVILLE 5 161.00	16.446	14.934	16.449	14.937	0.003	0.003
59803	SUB F 69.000	18.015	17.386	18.018	17.389	0.003	0.003
59809	SRNKRD 69.000	22.885	19.927	22.888	19.930	0.003	0.003
64056	MADISON3 345.00	21.310	17.289	21.313	17.292	0.003	0.003
64936	PAWNEEL7 115.00	11.605	11.239	11.608	11.242	0.003	0.003
66571	GR ISLD3 345.00	13.087	10.822	13.090	10.825	0.003	0.003
96043	7KINGDM 345.00	16.010	13.522	16.012	13.525	0.002	0.003
96044	7MCCRED 345.00	18.407	15.425	18.410	15.428	0.003	0.003
96320	5LEVASY 161.00	12.197	11.615	12.200	11.618	0.003	0.003
99938	R38_41 345.00	15.616	13.909	15.619	13.912	0.003	0.003
65035	MCCOOL Y 345.00	8.111	6.400	8.113	6.403	0.002	0.003
65388	S1221T9T 161.00	16.153	12.591	16.157	12.594	0.004	0.003
57995	MONTROS5 161.00	34.004	26.403	34.007	26.406	0.003	0.002
57268	STRANGR3 115.00	32.318	25.103	32.320	25.105	0.002	0.002
64199	GRIMES 5 161.00	31.075	24.202	31.077	24.204	0.002	0.002
65550	S950 8 69.000	30.410	23.678	30.413	23.680	0.003	0.002
64080	SYCAMOR3 345.00	27.077	21.067	27.079	21.069	0.002	0.002
64064	BONDRNT3 345.00	25.659	19.932	25.662	19.934	0.003	0.002
65380	S1201T1T 161.00	17.084	13.262	17.086	13.264	0.002	0.002
64196	NORWLK3 345.00	22.024	17.229	22.027	17.231	0.003	0.002
59811	SUB J 69.000	29.706	23.137	29.710	23.139	0.004	0.002
65513	S913 8 69.000	19.508	18.298	19.511	18.300	0.003	0.002
56856	SWISVAL6 230.00	21.577	17.932	21.578	17.934	0.001	0.002
57244	JARBALO3 115.00	20.175	17.458	20.176	17.460	0.001	0.002
63811	SUB701 8 69.000	21.207	16.627	21.208	16.629	0.001	0.002
64072	100 54 5 161.00	30.749	24.572	30.751	24.574	0.002	0.002
65463	S1263 5 161.00	9.397	8.389	9.399	8.391	0.002	0.002
65542	S942 8 69.000	16.156	15.450	16.158	15.452	0.002	0.002
65595	S995 8 69.000	15.573	14.827	15.575	14.829	0.002	0.002
65606	915TP9 8 69.000	15.213	14.123	15.215	14.125	0.002	0.002
65624	SAC629 8 69.000	15.120	14.090	15.122	14.092	0.002	0.002
65627	W BROCK8 69.000	13.066	10.965	13.068	10.967	0.002	0.002
56765	HOYT 7 345.00	18.797	15.327	18.799	15.329	0.002	0.002
56774	SWISVAL7 345.00	15.282	12.725	15.284	12.727	0.002	0.002
58042	SPRGHL 5 161.00	12.692	11.446	12.694	11.448	0.002	0.002
58089	SUGRCRK2 69.000	16.332	15.856	16.334	15.858	0.002	0.002
58095	LIBRTYS2 69.000	15.871	12.940	15.872	12.942	0.001	0.002
64934	PAULINE7 115.00	17.213	14.394	17.215	14.396	0.002	0.002
66313	GR ISL1T 345.00	13.541	11.713	13.543	11.715	0.002	0.002

66315	GR ISL2T 345.00	13.944	11.776	13.946	11.778	0.002	0.002
96091	5LATHRP 161.00	8.116	7.789	8.118	7.791	0.002	0.002
635100	R52WIND3 345.00	14.625	12.523	14.627	12.525	0.002	0.002
639840	R34 345.00	14.659	12.539	14.661	12.541	0.002	0.002
64933	PAULINE3 345.00	8.087	6.971	8.089	6.973	0.002	0.002
65608	S915T1 8 69.000	14.307	13.412	14.308	13.414	0.001	0.002
65619	MUD LNG8 69.000	15.817	15.127	15.820	15.129	0.003	0.002
65623	SAC623 8 69.000	16.478	15.650	16.481	15.652	0.003	0.002
59236	RICHMND5 161.00	8.824	8.413	8.827	8.415	0.003	0.002
64839	GR ISLD4 230.00	19.731	15.611	19.733	15.613	0.002	0.002
96071	5CLINTN 161.00	19.119	16.484	19.120	16.486	0.001	0.002
58080	HAWTH 2 69.000	23.749	18.502	23.752	18.504	0.003	0.002
64897	MCCOOL 7 115.00	18.447	14.400	18.449	14.402	0.002	0.001
59396	LAKE 5 161.00	13.833	10.740	13.834	10.741	0.001	0.001
59263	SIBLEYP2 69.000	20.840	16.182	20.841	16.183	0.001	0.001
65389	S1250T1T 161.00	14.416	11.196	14.417	11.197	0.001	0.001
56766	JEC N 7 345.00	39.527	30.694	39.528	30.696	0.001	0.001
59279	RGPLT 2 69.000	20.900	16.234	20.901	16.235	0.001	0.001
56853	LAWHILL6 230.00	21.897	17.009	21.898	17.010	0.001	0.001
63876	RAUN 5 161.00	53.732	41.724	53.734	41.726	0.002	0.001
59231	STRNGR 5 161.00	20.593	15.989	20.595	15.990	0.002	0.001
59280	PLSHILL2 69.000	19.378	15.045	19.380	15.046	0.002	0.001
96120	5THMHIL 161.00	43.737	33.967	43.738	33.968	0.001	0.001
64788	COOPER 8 69.000	8.061	6.260	8.062	6.262	0.001	0.001
65655	FREM A 8 69.000	22.270	17.332	22.271	17.333	0.001	0.001
34007	LAKEFLD5 161.00	31.881	24.864	31.881	24.865	0.000	0.001
56863	MORRIS 6 230.00	15.776	12.280	15.776	12.281	0.000	0.001
96104	5NODWAY 161.00	15.429	12.005	15.430	12.006	0.001	0.001
64197	NORWLK5 161.00	27.728	21.541	27.730	21.542	0.002	0.001
31230	MONTGMRY 345.00	33.814	26.265	33.816	26.266	0.002	0.001
57163	HOYT 3 115.00	31.102	24.161	31.104	24.162	0.002	0.001
96090	5KINGDM 161.00	27.383	21.268	27.385	21.269	0.002	0.001
65050	PAULINE8 69.000	5.686	4.415	5.686	4.416	0.000	0.001
65664	FREM G 8 69.000	19.820	15.396	19.821	15.397	0.001	0.001
30648	GRAYSUM1 345.00	35.805	27.802	35.805	27.803	0.000	0.001
65033	HUMBLT Y 161.00	6.775	5.278	6.775	5.279	0.000	0.001
64061	BOONVIL5 161.00	25.102	19.592	25.103	19.593	0.001	0.001
65054	BPS SUB7 115.00	24.444	19.121	24.445	19.122	0.001	0.001
65576	S976 8 69.000	14.993	12.799	14.994	12.800	0.001	0.001
65656	FREM B 8 69.000	17.384	14.447	17.385	14.448	0.001	0.001

30233	CALIF 161.00	9.001	8.088	9.002	8.089	0.001	0.001
30677	GUTHRIE 161.00	9.024	8.274	9.025	8.275	0.001	0.001
33404	PERCHE A 161.00	9.176	8.373	9.176	8.374	0.000	0.001
56769	LANG 7 345.00	13.130	11.254	13.130	11.255	0.000	0.001
56770	MORRIS 7 345.00	11.966	10.049	11.967	10.050	0.001	0.001
58058	NLOUISB5 161.00	10.360	9.283	10.362	9.284	0.002	0.001
58062	SALSBRY5 161.00	12.559	11.556	12.560	11.557	0.001	0.001
58081	GLENARE2 69.000	14.032	12.969	14.034	12.970	0.002	0.001
59240	ADRIAN 5 161.00	8.945	8.139	8.946	8.140	0.001	0.001
59262	LIBMOS 2 69.000	10.345	9.953	10.346	9.954	0.001	0.001
59391	MARYV5 161.00	12.047	10.972	12.048	10.973	0.001	0.001
63816	SUB706 8 69.000	10.723	10.341	10.724	10.342	0.001	0.001
64054	WGRAND5 161.00	23.608	19.019	23.609	19.020	0.001	0.001
64084	EARLHAM5 161.00	9.943	9.302	9.944	9.303	0.001	0.001
64984	SWEET W3 345.00	10.915	9.126	10.916	9.127	0.001	0.001
66306	SIOUXC2T 345.00	18.918	15.626	18.918	15.627	0.000	0.001
96501	5MCBAIN 161.00	13.181	12.116	13.182	12.117	0.001	0.001
65386	S1214T1T 161.00	5.842	4.734	5.843	4.735	0.001	0.001
65458	S1258 5 161.00	6.577	6.013	6.578	6.014	0.001	0.001
65562	S962 8 69.000	6.042	5.768	6.043	5.769	0.001	0.001
65582	S982 8 69.000	4.123	4.002	4.123	4.003	0.000	0.001
65592	S992 8 69.000	7.062	6.755	7.062	6.756	0.000	0.001
65652	NCU903 8 69.000	6.880	6.213	6.880	6.214	0.000	0.001
646301	S1301 5 161.00	8.731	7.843	8.732	7.844	0.001	0.001
30923	LATHROP 161.00	7.774	7.463	7.776	7.464	0.002	0.001
59241	SED E 5 161.00	7.414	7.053	7.414	7.054	0.000	0.001
63820	HASTING5 161.00	8.002	7.745	8.002	7.746	0.000	0.001
63826	CLRNDA 5 161.00	7.758	7.505	7.758	7.506	0.000	0.001
64842	GUIDE R7 115.00	4.454	4.350	4.454	4.351	0.000	0.001
64864	HUMBOLT7 115.00	9.346	7.343	9.346	7.344	0.000	0.001
96194	2CHILLI 69.000	8.151	7.064	8.151	7.065	0.000	0.001
96198	2GALLTN 69.000	3.826	3.639	3.826	3.640	0.000	0.001

Note 1: For Breakers Rated on a Total Current Basis
Note 2: For Breakers Rated on a Symmetrical Current Basis

B.2 Three Cycle Breaker

BUS		Fault Current (kA) without GEN-2014-021		Fault Current (kA) with GEN-2014-021		Fault Current Increase (kA) with GEN-2014-021	
Rated Interrupting Time		3-cycles		3-cycles		3-cycles	
Contact Parting Time		2-Cycles		2-Cycles		2-Cycles	
Bus #	Bus Name	Total [1]	Symm [2]	Total [1]	Symm [2]	Total [1]	Symm [2]
65036	MOORE Y 345.00	246.412	246.400	255.529	255.517	9.117	9.117
560009	G14-021-TAP 345.00	0.000	0.000	10.377	8.849	10.377	8.849
583910	GEN-2014-021345.00	0.000	0.000	8.324	7.141	8.324	7.141
583914	G14-021-HV-1345.00	0.000	0.000	7.541	6.561	7.541	6.561
65780	WAGENR1Y 345.00	108.413	108.400	110.116	110.103	1.703	1.703
541197	SMARYVL7 345.00	8.238	7.045	9.338	7.976	1.100	0.930
65358	S3458 3 345.00	39.983	33.670	40.582	34.198	0.599	0.528
541357	SMARYVL2 69.000	12.191	10.202	12.613	10.584	0.422	0.382
65392	S3455T3T 345.00	53.302	51.125	53.474	51.323	0.172	0.198
59201	SIBLEY 7 345.00	27.304	23.034	27.532	23.225	0.228	0.191
57973	HAWTHRN5 161.00	95.553	80.320	95.699	80.440	0.146	0.120
65337	S3455T1T 345.00	40.096	36.859	40.188	36.965	0.092	0.106
64786	COOPER 3 345.00	35.947	30.503	36.062	30.605	0.115	0.102
57976	LEVEE 5 161.00	73.575	62.214	73.681	62.308	0.106	0.094
65356	S3456 3 345.00	44.003	37.337	44.114	37.431	0.111	0.094
57972	HAWTH 7 345.00	34.408	29.127	34.499	29.208	0.091	0.081
65355	S3455 3 345.00	38.460	32.399	38.561	32.479	0.101	0.080
59202	SIBLEY 5 161.00	41.301	35.023	41.380	35.093	0.079	0.069
65360	S3740 3 345.00	24.005	20.387	24.078	20.449	0.073	0.062
65789	SELINC 3 345.00	22.146	19.223	22.201	19.284	0.055	0.061
65455	S1255 5 161.00	54.488	46.003	54.566	46.063	0.078	0.061
59198	SIBLEYP5 161.00	47.662	39.909	47.729	39.967	0.067	0.058
65354	S3454 3 345.00	31.543	26.823	31.601	26.878	0.058	0.054
58005	MLTSPJT5 161.00	50.938	43.141	50.992	43.196	0.054	0.054
58000	BLUEVLY5 161.00	50.650	42.985	50.705	43.039	0.055	0.054
57987	GRAND 5 161.00	77.589	65.646	77.651	65.697	0.062	0.051
58003	MLTSP2 5 161.00	43.366	37.963	43.411	38.014	0.045	0.051
65431	S1231 5 161.00	45.341	40.391	45.383	40.440	0.042	0.049
65786	WAGENER3 345.00	22.408	19.296	22.452	19.345	0.044	0.049
57985	NEAST 5 161.00	73.668	62.490	73.725	62.538	0.057	0.048
57989	NAVY 5 161.00	70.246	60.000	70.295	60.042	0.049	0.042

65459	S1259 5 161.00	37.363	33.272	37.399	33.313	0.036	0.041
58027	RANDLPH5 161.00	40.482	35.039	40.518	35.079	0.036	0.040
635013	PONYCKA3 345.00	40.362	34.144	40.406	34.183	0.044	0.039
635020	ATCHSNT3 345.00	20.240	17.433	20.274	17.471	0.034	0.038
65409	S1209 5 161.00	49.118	41.662	49.158	41.700	0.040	0.038
59200	PLSHILL7 345.00	23.898	20.287	23.944	20.324	0.046	0.037
65421	S1221 5 161.00	36.146	33.514	36.178	33.551	0.032	0.037
57990	CROSTWN5 161.00	47.662	47.653	47.699	47.690	0.037	0.037
635019	ATCHSN 3 345.00	20.080	17.309	20.112	17.346	0.032	0.037
65359	S3459 3 345.00	29.998	25.330	30.036	25.367	0.038	0.036
63800	CBLUFFS3 345.00	47.340	39.605	47.378	39.641	0.038	0.036
64902	MOORE 3 345.00	23.383	19.947	23.423	19.982	0.040	0.036
58011	CHOUTEU5 161.00	44.257	37.756	44.295	37.791	0.038	0.035
65406	S1206 5 161.00	62.186	52.541	62.223	52.573	0.037	0.032
65339	S3459T3T 345.00	27.302	23.524	27.329	23.556	0.027	0.032
65435	S1235 5 161.00	32.026	29.765	32.051	29.794	0.025	0.029
57997	LEEDS 5 161.00	35.053	30.690	35.079	30.719	0.026	0.029
65417	S1217 5 161.00	37.907	33.290	37.932	33.318	0.025	0.028
65427	S1227 5 161.00	35.283	31.902	35.307	31.930	0.024	0.028
58020	BRMGHAM5 161.00	28.758	28.050	28.782	28.078	0.024	0.028
65433	S1233 5 161.00	29.549	27.223	29.573	27.250	0.024	0.027
63801	CBLUFFS5 161.00	51.789	43.981	51.820	44.008	0.031	0.027
65785	WAGENER7 115.00	40.155	33.886	40.184	33.913	0.029	0.026
65450	S1250 5 161.00	39.418	35.894	39.441	35.920	0.023	0.026
58015	AVONDAL5 161.00	33.907	30.161	33.930	30.187	0.023	0.026
59393	STJOE7 345.00	20.208	17.733	20.230	17.759	0.022	0.026
59808	ECKLRD 161.00	30.448	26.757	30.471	26.783	0.023	0.026
65454	S1254 5 161.00	35.286	29.738	35.318	29.763	0.032	0.026
65460	S1260 5 161.00	27.679	25.971	27.701	25.996	0.022	0.025
58018	NKANCTY5 161.00	39.059	33.397	39.084	33.422	0.025	0.025
65416	S1216 5 161.00	35.648	30.755	35.669	30.779	0.021	0.024
65478	S1278 5 161.00	27.340	26.034	27.360	26.058	0.020	0.024
65720	NW68HOL3 345.00	16.594	14.466	16.615	14.490	0.021	0.024
65481	S1281 5 161.00	27.919	25.417	27.940	25.441	0.021	0.024
57969	STILWEL5 161.00	51.393	43.791	51.423	43.815	0.030	0.024
65401	S1201 5 161.00	37.056	32.917	37.076	32.939	0.020	0.022
65432	S1232 5 161.00	28.445	26.898	28.463	26.919	0.018	0.021
65434	S1234 5 161.00	26.453	24.776	26.472	24.797	0.019	0.021
57993	STHTOWN5 161.00	34.523	32.220	34.541	32.241	0.018	0.021
65767	84&LEIG7 115.00	34.144	29.412	34.161	29.432	0.017	0.020

65411	S1211 5 161.00	48.801	41.071	48.829	41.090	0.028	0.020
59225	PLSHIL 5 161.00	49.214	41.428	49.239	41.448	0.025	0.020
65429	S1229 5 161.00	32.908	29.514	32.924	29.533	0.016	0.019
65449	S1249 5 161.00	25.114	22.639	25.130	22.658	0.016	0.019
65453	S1253 5 161.00	25.761	24.364	25.778	24.383	0.017	0.019
65498	S1298 5 161.00	37.232	31.444	37.250	31.462	0.018	0.018
57968	STILWEL7 345.00	27.778	23.711	27.800	23.729	0.022	0.018
65410	S1210 5 161.00	31.331	28.461	31.347	28.479	0.016	0.018
65457	S1357 5 161.00	27.650	26.984	27.665	27.002	0.015	0.018
64787	COOPER 5 161.00	28.864	24.298	28.884	24.316	0.020	0.018
65670	FC1A 5 161.00	39.594	33.448	39.618	33.465	0.024	0.017
65420	S1220 5 161.00	32.492	29.543	32.507	29.560	0.015	0.017
65422	S1222 5 161.00	30.867	28.066	30.882	28.083	0.015	0.017
65451	S1251 5 161.00	43.620	36.993	43.638	37.009	0.018	0.017
65334	S3451T3T 345.00	23.036	19.471	23.053	19.487	0.017	0.016
65441	S1341 5 161.00	34.888	29.542	34.905	29.558	0.017	0.016
65405	S1305 5 161.00	35.361	29.938	35.378	29.955	0.017	0.016
65456	S1256 5 161.00	22.168	20.973	22.182	20.989	0.014	0.016
57978	CRAIG 5 161.00	48.852	41.707	48.869	41.723	0.017	0.016
65351	S3451 3 345.00	29.787	25.215	29.818	25.230	0.031	0.015
65486	S1286 5 161.00	30.115	27.593	30.128	27.608	0.013	0.015
65499	S1299 5 161.00	32.492	29.340	32.506	29.355	0.014	0.015
58639	LEEDREAC 161.00	26.265	23.229	26.279	23.244	0.014	0.015
65770	70&CAL 7 115.00	29.361	26.793	29.374	26.808	0.013	0.015
65784	84&FLET7 115.00	30.006	26.203	30.019	26.218	0.013	0.015
65336	S1254T1T 345.00	19.331	16.321	19.350	16.336	0.019	0.014
65426	S1226 5 161.00	27.630	25.166	27.643	25.180	0.013	0.014
59248	LBRTYST5 161.00	20.609	20.383	20.621	20.397	0.012	0.014
65738	20&PIO 7 115.00	27.692	26.044	27.704	26.058	0.012	0.014
65335	S3451T4T 345.00	23.071	19.501	23.088	19.514	0.017	0.013
65444	S1244 5 161.00	24.471	22.508	24.483	22.521	0.012	0.013
65730	2&N 7 115.00	27.584	25.403	27.595	25.416	0.011	0.013
65771	81&OC 7 115.00	26.862	24.182	26.873	24.195	0.011	0.013
96039	7FAIRPT 345.00	13.357	12.168	13.369	12.181	0.012	0.013
65443	S1343 5 161.00	28.807	26.536	28.819	26.549	0.012	0.013
64621	RAUN MD5 161.00	129.532	118.105	129.543	118.118	0.011	0.013
96098	5MOCITY 161.00	26.480	22.432	26.493	22.444	0.013	0.012
59205	BLSPE 5 161.00	22.024	20.551	22.034	20.563	0.010	0.012
59235	DUNCNRD5 161.00	21.436	19.717	21.447	19.729	0.011	0.012
65758	40&GER 7 115.00	24.465	23.520	24.475	23.532	0.010	0.012

65762	57&GAR 7 115.00	26.008	24.143	26.020	24.155	0.012	0.012
65714	NW68HOL7 115.00	30.722	26.082	30.735	26.094	0.013	0.011
646367	S1367 5 161.00	19.637	18.874	19.647	18.885	0.010	0.011
59804	SUB E 69.000	31.653	29.333	31.663	29.344	0.010	0.011
65436	S1236 5 161.00	18.975	18.204	18.985	18.215	0.010	0.011
65452	S1252 5 161.00	20.916	20.081	20.925	20.092	0.009	0.011
65487	S1287 5 161.00	18.879	18.160	18.889	18.171	0.010	0.011
58002	MARTCIT5 161.00	24.578	23.264	24.587	23.275	0.009	0.011
58010	WINJT S5 161.00	22.014	20.785	22.024	20.796	0.010	0.011
58053	REDEL 5 161.00	26.599	24.837	26.610	24.848	0.011	0.011
58638	MDTNREAC 161.00	26.308	23.678	26.317	23.689	0.009	0.011
65717	8&N 7 115.00	24.863	23.197	24.873	23.208	0.010	0.011
65773	93&O 7 115.00	23.111	22.122	23.120	22.133	0.009	0.011
65783	WAVERLY7 115.00	25.255	21.745	25.264	21.756	0.009	0.011
59249	HOOKRD 5 161.00	25.173	21.541	25.182	21.551	0.009	0.010
65448	S1248 5 161.00	21.737	21.305	21.747	21.315	0.010	0.010
58007	SWOPE S5 161.00	20.684	19.494	20.693	19.504	0.009	0.010
59825	STRLJCT2 69.000	31.416	28.072	31.425	28.082	0.009	0.010
65708	WLINC 7 115.00	23.379	22.168	23.387	22.178	0.008	0.010
59244	ORRICK 5 161.00	15.175	15.171	15.184	15.181	0.009	0.010
65437	S1237 5 161.00	18.554	17.879	18.562	17.889	0.008	0.010
65713	SW20&F 7 115.00	24.446	22.228	24.455	22.238	0.009	0.010
65772	91&A 7 115.00	22.625	21.757	22.634	21.767	0.009	0.010
59243	LKWINN 5 161.00	29.180	24.689	29.191	24.698	0.011	0.010
57982	IATAN 7 345.00	26.468	22.166	26.480	22.175	0.012	0.009
57977	CRAIG 7 345.00	24.121	20.570	24.129	20.579	0.008	0.009
58009	WINJT N5 161.00	18.920	17.637	18.928	17.646	0.008	0.009
58016	GLADSTN5 161.00	19.148	17.869	19.156	17.878	0.008	0.009
58050	ANTIOCH5 161.00	25.351	23.651	25.359	23.660	0.008	0.009
59814	SUB M 161.00	18.649	16.498	18.657	16.507	0.008	0.009
63810	SUB701 5 161.00	23.457	21.759	23.464	21.768	0.007	0.009
63817	BUNGE 5 161.00	22.722	22.718	22.732	22.727	0.010	0.009
63856	MANAWA 5 161.00	24.707	22.617	24.715	22.626	0.008	0.009
65718	3&VAND 7 115.00	22.615	22.037	22.623	22.046	0.008	0.009
65775	84&BLUF7 115.00	36.734	31.188	36.745	31.197	0.011	0.009
65790	ROKEBY 7 115.00	27.987	23.629	27.996	23.637	0.009	0.009
65600	S906 N 8 69.000	42.076	35.467	42.083	35.475	0.007	0.008
65509	S909 8 69.000	33.114	28.225	33.121	28.233	0.007	0.008
58021	RIVRSID5 161.00	19.893	18.397	19.900	18.405	0.007	0.008
65445	S1345 5 161.00	16.204	15.683	16.211	15.691	0.007	0.008

65497	S1297 5 161.00	20.635	19.294	20.642	19.302	0.007	0.008
65521	S921 8 69.000	30.144	26.320	30.151	26.328	0.007	0.008
58006	SWOPE N5 161.00	17.646	16.552	17.653	16.560	0.007	0.008
59233	LSUMITE5 161.00	22.792	19.596	22.799	19.604	0.007	0.008
63812	SUB702 5 161.00	22.933	21.261	22.940	21.269	0.007	0.008
59218	GREWOD 5 161.00	31.188	26.482	31.200	26.490	0.012	0.008
57981	LACYGNE7 345.00	44.464	37.270	44.471	37.277	0.007	0.007
64959	SHELDON7 115.00	41.074	34.869	41.084	34.876	0.010	0.007
65517	S917 8 69.000	31.233	26.574	31.240	26.581	0.007	0.007
57994	HICKMAN5 161.00	20.206	19.174	20.212	19.181	0.006	0.007
65774	91&HWY27 115.00	20.355	18.386	20.361	18.393	0.006	0.007
58004	BLUMILS5 161.00	16.468	14.865	16.474	14.872	0.006	0.007
58023	CLAYCM25 161.00	14.586	14.250	14.592	14.257	0.006	0.007
646366	S1366 5 161.00	17.299	16.373	17.305	16.380	0.006	0.007
58046	OXFORD 5 161.00	22.781	21.405	22.787	21.412	0.006	0.007
58057	BUCYRUS5 161.00	22.384	20.608	22.390	20.615	0.006	0.007
65751	30&A SO7 115.00	18.717	18.713	18.724	18.720	0.007	0.007
65781	WAGENR2Y 345.00	11.745	9.949	11.753	9.956	0.008	0.007
56772	STRANGR7 345.00	24.171	20.516	24.179	20.523	0.008	0.007
65601	S906 S 8 69.000	42.938	36.421	42.945	36.427	0.007	0.007
96076	5FAIRPT 161.00	20.433	17.428	20.438	17.434	0.005	0.006
65516	S916 8 69.000	25.529	23.968	25.535	23.974	0.006	0.006
65538	S938 8 69.000	24.570	24.286	24.575	24.292	0.005	0.006
31408	OVERTON 345.00	11.581	10.604	11.587	10.610	0.006	0.006
65710	NW40&AL7 115.00	18.611	16.755	18.616	16.761	0.005	0.006
59807	BVINDP 161.00	18.813	15.977	18.819	15.983	0.006	0.006
59802	SUB H 69.000	33.710	28.585	33.716	28.590	0.006	0.005
64623	RAUNMID5 161.00	85.076	71.935	85.080	71.940	0.004	0.005
65383	S1209T1T 161.00	21.626	18.254	21.632	18.260	0.006	0.005
65530	S930 8 69.000	22.532	22.194	22.536	22.199	0.004	0.005
57998	LVISTAE5 161.00	14.053	13.273	14.057	13.278	0.004	0.005
59215	HALMRK 5 161.00	13.362	13.173	13.367	13.178	0.005	0.005
64896	MCCOOL 3 345.00	10.960	10.040	10.965	10.045	0.005	0.005
65414	S1214 5 161.00	12.074	11.791	12.078	11.796	0.004	0.005
65512	S912 8 69.000	23.828	22.928	23.832	22.933	0.004	0.005
65518	S918 8 69.000	23.400	23.338	23.405	23.343	0.005	0.005
65519	S919 8 69.000	24.092	22.869	24.096	22.874	0.004	0.005
65524	S924 8 69.000	26.133	24.613	26.137	24.618	0.004	0.005
59247	LIBTYW 5 161.00	14.196	13.932	14.200	13.937	0.004	0.005
65385	S1211T1T 69.000	39.165	33.245	39.169	33.249	0.004	0.004

57966	WGARDNR5 161.00	40.035	33.693	40.041	33.697	0.006	0.004
65387	S1217T1T 161.00	14.869	12.591	14.872	12.595	0.003	0.004
65501	S901 8 69.000	35.094	29.845	35.097	29.849	0.003	0.004
65540	S940 8 69.000	21.921	21.016	21.925	21.020	0.004	0.004
65594	S994 8 69.000	19.305	19.064	19.308	19.068	0.003	0.004
647866	S6866 8 69.000	23.867	21.572	23.871	21.576	0.004	0.004
65384	S1210T7T 161.00	16.484	14.789	16.488	14.793	0.004	0.004
65480	S1280 5 161.00	11.461	10.568	11.465	10.572	0.004	0.004
59207	ARCHIE 5 161.00	16.444	15.718	16.447	15.722	0.003	0.004
65510	S910 8 69.000	29.626	27.024	29.630	27.028	0.004	0.004
65539	S939 8 69.000	21.410	20.623	21.413	20.627	0.003	0.004
65621	JCT205 8 69.000	24.048	22.803	24.051	22.807	0.003	0.004
65330	SARP4&5T 161.00	24.803	20.730	24.808	20.734	0.005	0.004
57965	W.GRDNR7 345.00	22.869	19.399	22.875	19.403	0.006	0.004
65382	S1206T2T 161.00	20.330	17.217	20.334	17.220	0.004	0.004
65381	S1206T1T 161.00	22.202	18.692	22.206	18.696	0.004	0.003
64050	SE POLK3 345.00	28.535	24.206	28.537	24.209	0.002	0.003
64636	SYCMID25 161.00	50.934	43.089	50.937	43.092	0.003	0.003
64606	CB2 MID8 69.000	32.140	27.160	32.143	27.163	0.003	0.003
63803	CBLUFFS8 69.000	32.409	27.378	32.412	27.381	0.003	0.003
64607	CB3 MID8 69.000	32.825	27.707	32.828	27.710	0.003	0.003
65511	S911 8 69.000	35.561	29.988	35.564	29.991	0.003	0.003
64060	BOONVIL3 345.00	22.994	19.535	22.997	19.538	0.003	0.003
64198	GRIMES 3 345.00	23.950	20.357	23.953	20.360	0.003	0.003
65507	S907 8 69.000	21.866	20.657	21.869	20.660	0.003	0.003
65508	S908 8 69.000	20.118	19.719	20.120	19.722	0.002	0.003
65523	S923 8 69.000	19.913	19.402	19.915	19.405	0.002	0.003
65528	S928 8 69.000	15.888	15.885	15.890	15.888	0.002	0.003
65605	915TP3 8 69.000	16.023	15.957	16.025	15.960	0.002	0.003
31088	MCCREDIE 345.00	17.823	15.947	17.826	15.950	0.003	0.003
31409	OVERTON 161.00	18.372	16.397	18.374	16.400	0.002	0.003
57999	LVISTAW5 161.00	14.498	13.857	14.501	13.860	0.003	0.003
58068	WAGSTAF5 161.00	15.411	14.234	15.414	14.237	0.003	0.003
58082	HAWTHJT2 69.000	14.777	14.775	14.779	14.778	0.002	0.003
59184	LONEJK 5 161.00	14.349	12.583	14.352	12.586	0.003	0.003
59221	PLTCTY 5 161.00	14.781	13.873	14.784	13.876	0.003	0.003
59239	HVILLE 5 161.00	15.467	14.934	15.470	14.937	0.003	0.003
59803	SUB F 69.000	17.389	17.386	17.391	17.389	0.002	0.003
59809	SRNKRD 69.000	21.485	19.927	21.487	19.930	0.002	0.003
64056	MADISON3 345.00	19.948	17.289	19.951	17.292	0.003	0.003

64936	PAWNEEL7 115.00	11.241	11.239	11.243	11.242	0.002	0.003
66571	GR ISLD3 345.00	12.260	10.822	12.262	10.825	0.002	0.003
96043	7KINGDM 345.00	15.011	13.522	15.013	13.525	0.002	0.003
96044	7MCCRED 345.00	17.253	15.425	17.256	15.428	0.003	0.003
96320	5LEVASY 161.00	11.617	11.615	11.620	11.618	0.003	0.003
99938	R38_41 345.00	14.675	13.909	14.677	13.912	0.002	0.003
65388	S1221T9T 161.00	15.087	12.780	15.091	12.783	0.004	0.003
63875	RAUN 3 345.00	39.590	33.256	39.593	33.258	0.003	0.003
57995	MONTROS5 161.00	32.941	27.729	32.943	27.732	0.002	0.003
65723	NW68HOLY 345.00	10.122	8.541	10.125	8.543	0.003	0.002
65035	MCCOOL Y 345.00	7.584	6.470	7.586	6.472	0.002	0.002
64199	GRIMES 5 161.00	29.088	24.639	29.090	24.641	0.002	0.002
65550	S950 8 69.000	28.459	24.097	28.462	24.100	0.003	0.002
64080	SYCAMOR3 345.00	25.328	21.430	25.331	21.432	0.003	0.002
64064	BONDRNT3 345.00	23.953	20.171	23.956	20.173	0.003	0.002
65380	S1201T1T 161.00	15.942	13.409	15.943	13.411	0.001	0.002
64196	NORWLK3 345.00	20.581	17.491	20.583	17.493	0.002	0.002
64839	GR ISLD4 230.00	18.452	15.750	18.453	15.752	0.001	0.002
64072	100 54 5 161.00	28.766	24.608	28.768	24.610	0.002	0.002
65513	S913 8 69.000	18.374	18.298	18.376	18.300	0.002	0.002
56856	SWISVAL6 230.00	20.217	17.932	20.219	17.934	0.002	0.002
57244	JARBALO3 115.00	18.935	17.458	18.937	17.460	0.002	0.002
65463	S1263 5 161.00	8.831	8.389	8.833	8.391	0.002	0.002
65542	S942 8 69.000	15.452	15.450	15.455	15.452	0.003	0.002
65595	S995 8 69.000	14.830	14.827	14.832	14.829	0.002	0.002
65606	915TP9 8 69.000	14.322	14.123	14.324	14.125	0.002	0.002
65624	SAC629 8 69.000	14.237	14.090	14.239	14.092	0.002	0.002
65627	W BROCK8 69.000	12.248	10.965	12.249	10.967	0.001	0.002
56765	HOYT 7 345.00	17.599	15.327	17.601	15.329	0.002	0.002
56774	SWISVAL7 345.00	14.320	12.725	14.322	12.727	0.002	0.002
58042	SPRGHL 5 161.00	11.934	11.446	11.935	11.448	0.001	0.002
58089	SUGRCRK2 69.000	15.858	15.856	15.860	15.858	0.002	0.002
58095	LIBRTYS2 69.000	14.859	12.940	14.860	12.942	0.001	0.002
64934	PAULINE7 115.00	16.133	14.394	16.134	14.396	0.001	0.002
66313	GR ISL1T 345.00	12.709	11.713	12.711	11.715	0.002	0.002
66315	GR ISL2T 345.00	13.074	11.776	13.076	11.778	0.002	0.002
96091	5LATHRP 161.00	7.790	7.789	7.792	7.791	0.002	0.002
635100	R52WIND3 345.00	13.720	12.523	13.722	12.525	0.002	0.002
639840	R34 345.00	13.752	12.539	13.753	12.541	0.001	0.002
64933	PAULINE3 345.00	7.589	6.971	7.591	6.973	0.002	0.002

65608	S915T1 8 69.000	13.475	13.412	13.476	13.414	0.001	0.002
65619	MUD LNG8 69.000	15.129	15.127	15.132	15.129	0.003	0.002
65623	SAC623 8 69.000	15.653	15.650	15.656	15.652	0.003	0.002
59236	RICHMND5 161.00	8.414	8.413	8.417	8.415	0.003	0.002
96071	5CLINTN 161.00	17.941	16.484	17.942	16.486	0.001	0.002
58080	HAWTH 2 69.000	22.180	18.779	22.183	18.781	0.003	0.002
59811	SUB J 69.000	27.931	23.718	27.934	23.720	0.003	0.002
64897	MCCOOL 7 115.00	17.232	14.617	17.235	14.618	0.003	0.001
59263	SIBLEYP2 69.000	20.388	17.053	20.390	17.054	0.002	0.001
56766	JEC N 7 345.00	38.393	32.283	38.395	32.284	0.002	0.001
59231	STRNGR 5 161.00	19.861	16.708	19.863	16.709	0.002	0.001
59396	LAKE 5 161.00	13.530	11.315	13.531	11.317	0.001	0.001
59280	PLSHILL2 69.000	18.688	15.717	18.689	15.718	0.001	0.001
96120	5THMHIL 161.00	42.165	35.401	42.167	35.402	0.002	0.001
65655	FREM A 8 69.000	21.000	17.813	21.001	17.815	0.001	0.001
34007	LAKEFLD5 161.00	29.918	25.404	29.918	25.405	0.000	0.001
65389	S1250T1T 161.00	14.048	11.780	14.049	11.782	0.001	0.001
57268	STRANGR3 115.00	30.925	26.000	30.927	26.002	0.002	0.001
56863	MORRIS 6 230.00	14.762	12.495	14.762	12.496	0.000	0.001
96104	5NODWAY 161.00	14.432	12.211	14.433	12.212	0.001	0.001
64197	NORWLK5 161.00	25.917	21.895	25.919	21.896	0.002	0.001
31230	MONTGMRY 345.00	31.604	26.695	31.606	26.696	0.002	0.001
57163	HOYT 3 115.00	29.051	24.500	29.052	24.501	0.001	0.001
96090	5KINGDM 161.00	25.575	21.563	25.576	21.564	0.001	0.001
65050	PAULINE8 69.000	5.308	4.470	5.308	4.471	0.000	0.001
65664	FREM G 8 69.000	18.499	15.569	18.500	15.570	0.001	0.001
30648	GRAYSUM1 345.00	33.412	28.112	33.412	28.113	0.000	0.001
65033	HUMBLT Y 161.00	6.327	5.357	6.328	5.358	0.001	0.001
64061	BOONVIL5 161.00	23.449	19.886	23.450	19.887	0.001	0.001
63811	SUB701 8 69.000	19.815	16.829	19.816	16.830	0.001	0.001
65054	BPS SUB7 115.00	22.842	19.412	22.843	19.413	0.001	0.001
65575	S975 8 69.000	13.501	11.531	13.502	11.532	0.001	0.001
64848	HASTING7 115.00	17.536	14.980	17.537	14.981	0.001	0.001
56794	ROSEHIL7 345.00	15.843	13.538	15.843	13.539	0.000	0.001
65576	S976 8 69.000	14.061	12.799	14.061	12.800	0.000	0.001
65656	FREM B 8 69.000	16.289	14.447	16.289	14.448	0.000	0.001
30233	CALIF 161.00	8.462	8.088	8.462	8.089	0.000	0.001
30677	GUTHRIE 161.00	8.491	8.274	8.491	8.275	0.000	0.001
33404	PERCHE A 161.00	8.632	8.373	8.632	8.374	0.000	0.001
56769	LANG 7 345.00	12.318	11.254	12.319	11.255	0.001	0.001

56770	MORRIS 7 345.00	11.217	10.049	11.217	10.050	0.000	0.001
58058	NLOUISB5 161.00	9.738	9.283	9.740	9.284	0.002	0.001
58062	SALSBRY5 161.00	11.819	11.556	11.820	11.557	0.001	0.001
58081	GLENARE2 69.000	13.208	12.969	13.209	12.970	0.001	0.001
59240	ADRIAN 5 161.00	8.413	8.139	8.414	8.140	0.001	0.001
59262	LIBMOS 2 69.000	9.955	9.953	9.956	9.954	0.001	0.001
59391	MARYV5 161.00	11.332	10.972	11.332	10.973	0.000	0.001
63816	SUB706 8 69.000	10.343	10.341	10.343	10.342	0.000	0.001
64054	WGRAND5 161.00	22.092	19.019	22.094	19.020	0.002	0.001
64084	EARLHAM5 161.00	9.364	9.302	9.365	9.303	0.001	0.001
64984	SWEET W3 345.00	10.230	9.126	10.231	9.127	0.001	0.001
66306	SIOUXC2T 345.00	17.718	15.626	17.719	15.627	0.001	0.001
96501	5MCBAIN 161.00	12.403	12.116	12.404	12.117	0.001	0.001
65386	S1214T1T 161.00	5.464	4.734	5.464	4.735	0.000	0.001
65458	S1258 5 161.00	6.187	6.013	6.188	6.014	0.001	0.001
65562	S962 8 69.000	5.769	5.768	5.770	5.769	0.001	0.001
65582	S982 8 69.000	4.003	4.002	4.003	4.003	0.000	0.001
65592	S992 8 69.000	6.757	6.755	6.757	6.756	0.000	0.001
65652	NCU903 8 69.000	6.469	6.213	6.469	6.214	0.000	0.001
646301	S1301 5 161.00	8.208	7.843	8.209	7.844	0.001	0.001
30923	LATHROP 161.00	7.464	7.463	7.466	7.464	0.002	0.001
59241	SED E 5 161.00	7.055	7.053	7.055	7.054	0.000	0.001
63820	HASTING5 161.00	7.746	7.745	7.747	7.746	0.001	0.001
63826	CLRNDA 5 161.00	7.506	7.505	7.507	7.506	0.001	0.001
64842	GUIDE R7 115.00	4.351	4.350	4.351	4.351	0.000	0.001
96194	2CHILLI 69.000	7.651	7.064	7.651	7.065	0.000	0.001
96198	2GALLTN 69.000	3.640	3.639	3.640	3.640	0.000	0.001

Note 1: For Breakers Rated on a Total Current Basis
Note 2: For Breakers Rated on a Symmetrical Current Basis

B.3 Five Cycle Breaker

BUS		Fault Current (kA) without GEN-2014-021		Fault Current (kA) with GEN-2014-021		Fault Current Increase (kA) with GEN-2014-021	
Rated Interrupting Time		5-cycles		5-cycles		5-cycles	
Contact Parting Time		3-Cycles		3-Cycles		3-Cycles	
Bus #	Bus Name	Total [1]	Symm [2]	Total [1]	Symm [2]	Total [1]	Symm [2]
65036	MOORE Y 345.00	246.400	246.400	255.517	255.517	9.117	9.117
560009	G14-021-TAP 345.00	0.000	0.000	9.511	8.870	9.511	8.870
583910	GEN-2014-021345.00	0.000	0.000	7.679	7.161	7.679	7.161
583914	G14-021-HV-1345.00	0.000	0.000	6.992	6.561	6.992	6.561
65780	WAGENR1Y 345.00	108.400	108.400	110.103	110.103	1.703	1.703
541197	SMARYVL7 345.00	7.584	7.073	8.580	8.001	0.996	0.928
65358	S3458 3 345.00	36.426	33.610	36.990	34.125	0.564	0.515
541357	SMARYVL2 69.000	11.110	10.243	11.577	10.657	0.467	0.415
65392	S3455T3T 345.00	51.242	51.125	51.420	51.323	0.178	0.198
59201	SIBLEY 7 345.00	24.648	22.942	24.851	23.133	0.203	0.191
57973	HAWTHRN5 161.00	88.372	81.149	88.490	81.263	0.118	0.114
65337	S3455T1T 345.00	37.934	36.859	38.029	36.965	0.095	0.106
64786	COOPER 3 345.00	32.995	30.333	33.110	30.431	0.115	0.098
65356	S3456 3 345.00	40.046	37.107	40.142	37.201	0.096	0.094
57976	LEVEE 5 161.00	67.239	61.982	67.341	62.073	0.102	0.091
65355	S3455 3 345.00	34.673	32.289	34.759	32.371	0.086	0.082
57972	HAWTH 7 345.00	31.479	29.002	31.566	29.081	0.087	0.079
59202	SIBLEY 5 161.00	37.869	34.840	37.940	34.910	0.071	0.069
65455	S1255 5 161.00	49.224	45.805	49.291	45.867	0.067	0.062
65360	S3740 3 345.00	21.922	20.258	21.985	20.320	0.063	0.061
65789	SELINC 3 345.00	20.517	19.223	20.573	19.284	0.056	0.061
59198	SIBLEYP5 161.00	43.281	39.939	43.343	39.997	0.062	0.058
65354	S3454 3 345.00	28.793	26.850	28.852	26.907	0.059	0.056
58005	MLTSPJT5 161.00	46.248	43.116	46.304	43.171	0.056	0.055
58000	BLUEVLY5 161.00	46.110	42.993	46.166	43.048	0.056	0.055
57987	GRAND 5 161.00	70.269	65.308	70.322	65.360	0.053	0.052
58003	MLTSP2 5 161.00	40.299	37.963	40.345	38.014	0.046	0.051
65431	S1231 5 161.00	42.402	40.391	42.446	40.440	0.044	0.049
57985	NEAST 5 161.00	67.001	62.111	67.049	62.159	0.048	0.048
57989	NAVY 5 161.00	64.543	60.192	64.594	60.237	0.051	0.045
65786	WAGENER3 345.00	20.701	19.302	20.745	19.345	0.044	0.043

65459	S1259 5 161.00	34.936	33.272	34.974	33.313	0.038	0.041
58027	RANDLPH5 161.00	37.466	35.039	37.503	35.079	0.037	0.040
65409	S1209 5 161.00	44.677	41.659	44.719	41.698	0.042	0.039
635013	PONYCKA3 345.00	36.902	34.009	36.944	34.047	0.042	0.038
65359	S3459 3 345.00	27.135	25.290	27.174	25.327	0.039	0.037
64902	MOORE 3 345.00	21.442	19.996	21.482	20.034	0.040	0.037
59200	PLSHILL7 345.00	21.774	20.160	21.814	20.197	0.040	0.037
65421	S1221 5 161.00	34.306	33.514	34.339	33.551	0.033	0.037
57990	CROSTWN5 161.00	47.653	47.653	47.690	47.690	0.037	0.037
635019	ATCHSN 3 345.00	18.556	17.309	18.590	17.346	0.034	0.037
58011	CHOUTEU5 161.00	40.585	37.851	40.625	37.888	0.040	0.037
635020	ATCHSNT3 345.00	18.700	17.436	18.734	17.471	0.034	0.035
63800	CBLUFFS3 345.00	42.970	39.649	43.007	39.684	0.037	0.035
65339	S3459T3T 345.00	25.227	23.524	25.255	23.556	0.028	0.032
65406	S1206 5 161.00	56.790	52.366	56.826	52.397	0.036	0.031
65435	S1235 5 161.00	30.424	29.765	30.450	29.794	0.026	0.029
57997	LEEDS 5 161.00	32.575	30.690	32.602	30.719	0.027	0.029
65417	S1217 5 161.00	35.267	33.290	35.292	33.318	0.025	0.028
65427	S1227 5 161.00	33.176	31.902	33.201	31.930	0.025	0.028
58020	BRMGHAM5 161.00	28.050	28.050	28.078	28.078	0.028	0.028
65433	S1233 5 161.00	27.978	27.223	28.003	27.250	0.025	0.027
63801	CBLUFFS5 161.00	47.308	43.703	47.335	43.730	0.027	0.027
65785	WAGENER7 115.00	36.261	33.746	36.287	33.773	0.026	0.027
65454	S1254 5 161.00	31.824	29.631	31.851	29.658	0.027	0.026
65450	S1250 5 161.00	37.162	35.894	37.186	35.920	0.024	0.026
58015	AVONDAL5 161.00	31.692	30.161	31.716	30.187	0.024	0.026
59393	STJOE7 345.00	18.795	17.733	18.818	17.759	0.023	0.026
59808	ECKLRD 161.00	28.334	26.757	28.358	26.783	0.024	0.026
58018	NKANCTY5 161.00	35.953	33.526	35.980	33.552	0.027	0.026
57969	STILWEL5 161.00	47.044	43.874	47.075	43.899	0.031	0.025
65460	S1260 5 161.00	26.388	25.971	26.411	25.996	0.023	0.025
65416	S1216 5 161.00	32.954	30.755	32.975	30.779	0.021	0.024
65478	S1278 5 161.00	26.211	26.034	26.232	26.058	0.021	0.024
65720	NW68HOL3 345.00	15.397	14.466	15.419	14.490	0.022	0.024
65481	S1281 5 161.00	26.318	25.417	26.340	25.441	0.022	0.024
65401	S1201 5 161.00	34.619	32.917	34.639	32.939	0.020	0.022
65432	S1232 5 161.00	27.198	26.898	27.217	26.919	0.019	0.021
65434	S1234 5 161.00	25.202	24.776	25.221	24.797	0.019	0.021
57993	STHTOWN5 161.00	32.847	32.220	32.865	32.241	0.018	0.021
65411	S1211 5 161.00	43.960	40.948	43.983	40.969	0.023	0.021

57968	STILWEL7 345.00	25.496	23.778	25.518	23.797	0.022	0.019
65429	S1229 5 161.00	30.851	29.514	30.868	29.533	0.017	0.019
65449	S1249 5 161.00	23.588	22.639	23.605	22.658	0.017	0.019
65453	S1253 5 161.00	24.633	24.364	24.651	24.383	0.018	0.019
65498	S1298 5 161.00	33.685	31.396	33.704	31.415	0.019	0.019
59225	PLSHIL 5 161.00	45.995	42.132	46.017	42.151	0.022	0.018
65410	S1210 5 161.00	29.511	28.461	29.528	28.479	0.017	0.018
65457	S1357 5 161.00	26.984	26.984	27.002	27.002	0.018	0.018
65767	84&LEIG7 115.00	31.546	29.414	31.564	29.432	0.018	0.018
65670	FC1A 5 161.00	35.791	33.296	35.812	33.313	0.021	0.017
65420	S1220 5 161.00	30.615	29.543	30.631	29.560	0.016	0.017
65422	S1222 5 161.00	29.084	28.066	29.100	28.083	0.016	0.017
64787	COOPER 5 161.00	26.290	24.259	26.309	24.276	0.019	0.017
57978	CRAIG 5 161.00	44.852	41.829	44.871	41.846	0.019	0.017
65441	S1341 5 161.00	31.666	29.522	31.683	29.538	0.017	0.017
65405	S1305 5 161.00	32.087	29.916	32.105	29.932	0.018	0.017
65451	S1251 5 161.00	39.650	36.771	39.666	36.788	0.016	0.017
65334	S3451T3T 345.00	20.838	19.378	20.853	19.394	0.015	0.016
65456	S1256 5 161.00	21.201	20.973	21.215	20.989	0.014	0.016
65351	S3451 3 345.00	27.167	25.058	27.183	25.073	0.016	0.015
65486	S1286 5 161.00	28.456	27.593	28.470	27.608	0.014	0.015
65499	S1299 5 161.00	30.537	29.340	30.551	29.355	0.014	0.015
58639	LEEDREAC 161.00	24.498	23.229	24.512	23.244	0.014	0.015
65770	70&CAL 7 115.00	27.702	26.793	27.716	26.808	0.014	0.015
65784	84&FLET7 115.00	27.859	26.203	27.872	26.218	0.013	0.015
65336	S1254T1T 345.00	17.464	16.251	17.481	16.266	0.017	0.015
65426	S1226 5 161.00	26.051	25.166	26.064	25.180	0.013	0.014
59248	LBRTYST5 161.00	20.383	20.383	20.397	20.397	0.014	0.014
65738	20&PIO 7 115.00	26.424	26.044	26.436	26.058	0.012	0.014
65335	S3451T4T 345.00	20.869	19.408	20.884	19.421	0.015	0.014
65444	S1244 5 161.00	23.156	22.508	23.168	22.521	0.012	0.013
65730	2&N 7 115.00	26.114	25.403	26.126	25.416	0.012	0.013
65771	81&OC 7 115.00	25.218	24.182	25.229	24.195	0.011	0.013
96039	7FAIRPT 345.00	12.594	12.168	12.606	12.181	0.012	0.013
65443	S1343 5 161.00	27.274	26.536	27.287	26.549	0.013	0.013
64621	RAUN MD5 161.00	122.176	118.105	122.188	118.118	0.012	0.013
96098	5MOCITY 161.00	24.024	22.306	24.036	22.318	0.012	0.012
59205	BLSPE 5 161.00	20.953	20.551	20.964	20.563	0.011	0.012
59235	DUNCNRD5 161.00	20.284	19.717	20.296	19.729	0.012	0.012
65758	40&GER 7 115.00	23.540	23.520	23.551	23.532	0.011	0.012

65762	57&GAR 7 115.00	24.696	24.143	24.707	24.155	0.011	0.012
65714	NW68HOL7 115.00	27.979	26.090	27.992	26.101	0.013	0.012
65783	WAVERLY7 115.00	23.330	21.751	23.339	21.762	0.009	0.011
646367	S1367 5 161.00	18.893	18.874	18.903	18.885	0.010	0.011
59804	SUB E 69.000	30.036	29.333	30.046	29.344	0.010	0.011
65436	S1236 5 161.00	18.244	18.204	18.253	18.215	0.009	0.011
65452	S1252 5 161.00	20.115	20.081	20.125	20.092	0.010	0.011
65487	S1287 5 161.00	18.169	18.160	18.180	18.171	0.011	0.011
58002	MARTCIT5 161.00	23.509	23.264	23.519	23.275	0.010	0.011
58010	WINJT S5 161.00	21.037	20.785	21.047	20.796	0.010	0.011
58053	REDEL 5 161.00	25.312	24.837	25.323	24.848	0.011	0.011
58638	MDTNREAC 161.00	24.695	23.678	24.705	23.689	0.010	0.011
65717	8&N 7 115.00	23.653	23.197	23.663	23.208	0.010	0.011
65773	93&O 7 115.00	22.201	22.122	22.210	22.133	0.009	0.011
59249	HOOKRD 5 161.00	23.203	21.635	23.212	21.645	0.009	0.010
65448	S1248 5 161.00	21.305	21.305	21.315	21.315	0.010	0.010
58007	SWOPE S5 161.00	19.752	19.494	19.762	19.504	0.010	0.010
59825	STRLJCT2 69.000	29.413	28.072	29.422	28.082	0.009	0.010
65708	WLINC 7 115.00	22.377	22.168	22.386	22.178	0.009	0.010
59244	ORRICK 5 161.00	15.171	15.171	15.181	15.181	0.010	0.010
65437	S1237 5 161.00	17.879	17.879	17.889	17.889	0.010	0.010
65713	SW20&F 7 115.00	23.034	22.228	23.044	22.238	0.010	0.010
65772	91&A 7 115.00	21.772	21.757	21.781	21.767	0.009	0.010
59243	LKWINN 5 161.00	26.457	24.665	26.468	24.674	0.011	0.010
57977	CRAIG 7 345.00	22.109	20.618	22.117	20.627	0.008	0.009
58009	WINJT N5 161.00	17.993	17.637	18.002	17.646	0.009	0.009
58016	GLADSTN5 161.00	18.218	17.869	18.225	17.878	0.007	0.009
58050	ANTIOCH5 161.00	24.117	23.651	24.125	23.660	0.008	0.009
59814	SUB M 161.00	17.396	16.498	17.405	16.507	0.009	0.009
63810	SUB701 5 161.00	22.267	21.759	22.275	21.768	0.008	0.009
63817	BUNGE 5 161.00	22.718	22.718	22.727	22.727	0.009	0.009
63856	MANAWA 5 161.00	23.338	22.617	23.347	22.626	0.009	0.009
65718	3&VAND 7 115.00	22.037	22.037	22.046	22.046	0.009	0.009
57982	IATAN 7 345.00	24.160	22.268	24.170	22.276	0.010	0.009
65775	84&BLUF7 115.00	33.488	30.992	33.497	31.000	0.009	0.009
65790	ROKEBY 7 115.00	25.285	23.527	25.292	23.536	0.007	0.009
65600	S906 N 8 69.000	37.981	35.393	37.988	35.401	0.007	0.008
65509	S909 8 69.000	30.329	28.284	30.336	28.292	0.007	0.008
59233	LSUMITE5 161.00	21.043	19.621	21.051	19.629	0.008	0.008
58021	RIVRSID5 161.00	18.862	18.397	18.869	18.405	0.007	0.008

65445	S1345 5 161.00	15.683	15.683	15.691	15.691	0.008	0.008
65497	S1297 5 161.00	19.647	19.294	19.654	19.302	0.007	0.008
65521	S921 8 69.000	27.986	26.320	27.993	26.328	0.007	0.008
58006	SWOPE N5 161.00	16.821	16.552	16.828	16.560	0.007	0.008
63812	SUB702 5 161.00	21.765	21.261	21.773	21.269	0.008	0.008
59218	GREWOD 5 161.00	28.597	26.324	28.607	26.331	0.010	0.007
56772	STRANGR7 345.00	22.007	20.520	22.014	20.528	0.007	0.007
64959	SHELDON7 115.00	37.436	34.650	37.445	34.657	0.009	0.007
65517	S917 8 69.000	28.534	26.608	28.540	26.615	0.006	0.007
57994	HICKMAN5 161.00	19.346	19.174	19.352	19.181	0.006	0.007
65774	91&HWY27 115.00	19.133	18.386	19.139	18.393	0.006	0.007
58004	BLUMILS5 161.00	15.475	14.865	15.482	14.872	0.007	0.007
58023	CLAYCM25 161.00	14.250	14.250	14.257	14.257	0.007	0.007
646366	S1366 5 161.00	16.547	16.373	16.553	16.380	0.006	0.007
58046	OXFORD 5 161.00	21.730	21.405	21.736	21.412	0.006	0.007
58057	BUCYRUS5 161.00	21.189	20.608	21.195	20.615	0.006	0.007
65751	30&A SO7 115.00	18.713	18.713	18.720	18.720	0.007	0.007
57981	LACYGNE7 345.00	42.057	38.497	42.063	38.504	0.006	0.007
65781	WAGENR2Y 345.00	10.654	9.893	10.660	9.900	0.006	0.007
65601	S906 S 8 69.000	39.043	36.201	39.049	36.207	0.006	0.007
96076	5FAIRPT 161.00	18.735	17.471	18.740	17.477	0.005	0.006
65516	S916 8 69.000	24.344	23.968	24.350	23.974	0.006	0.006
65538	S938 8 69.000	24.286	24.286	24.292	24.292	0.006	0.006
31408	OVERTON 345.00	10.941	10.604	10.946	10.610	0.005	0.006
65710	NW40&AL7 115.00	17.472	16.755	17.477	16.761	0.005	0.006
65383	S1209T1T 161.00	19.551	18.223	19.557	18.228	0.006	0.006
59807	BVINDP 161.00	17.192	15.876	17.198	15.882	0.006	0.005
59802	SUB H 69.000	30.637	28.414	30.642	28.420	0.005	0.005
64623	RAUNMID5 161.00	76.989	71.581	76.993	71.587	0.004	0.005
65530	S930 8 69.000	22.194	22.194	22.199	22.199	0.005	0.005
57998	LVISTAE5 161.00	13.431	13.273	13.436	13.278	0.005	0.005
59215	HALMRK 5 161.00	13.173	13.173	13.178	13.178	0.005	0.005
64896	MCCOOL 3 345.00	10.356	10.040	10.361	10.045	0.005	0.005
65414	S1214 5 161.00	11.791	11.791	11.796	11.796	0.005	0.005
65512	S912 8 69.000	22.935	22.928	22.939	22.933	0.004	0.005
65518	S918 8 69.000	23.338	23.338	23.343	23.343	0.005	0.005
65519	S919 8 69.000	23.069	22.869	23.073	22.874	0.004	0.005
65524	S924 8 69.000	24.950	24.613	24.954	24.618	0.004	0.005
59247	LIBTYW 5 161.00	13.932	13.932	13.937	13.937	0.005	0.005
65385	S1211T1T 69.000	35.686	33.037	35.689	33.041	0.003	0.004

65387	S1217T1T 161.00	13.496	12.582	13.499	12.587	0.003	0.004
65501	S901 8 69.000	32.038	29.876	32.041	29.880	0.003	0.004
65330	SARP4&5T 161.00	23.806	21.888	23.811	21.892	0.005	0.004
65540	S940 8 69.000	21.070	21.016	21.074	21.020	0.004	0.004
65594	S994 8 69.000	19.064	19.064	19.068	19.068	0.004	0.004
647866	S6866 8 69.000	22.439	21.572	22.443	21.576	0.004	0.004
65384	S1210T7T 161.00	15.456	14.789	15.459	14.793	0.003	0.004
65480	S1280 5 161.00	10.856	10.568	10.859	10.572	0.003	0.004
59207	ARCHIE 5 161.00	15.788	15.718	15.791	15.722	0.003	0.004
65510	S910 8 69.000	27.828	27.024	27.833	27.028	0.005	0.004
65539	S939 8 69.000	20.623	20.623	20.627	20.627	0.004	0.004
65621	JCT205 8 69.000	23.018	22.803	23.022	22.807	0.004	0.004
57966	WGARDNR5 161.00	36.459	33.643	36.465	33.647	0.006	0.004
57965	W.GRDNR7 345.00	20.797	19.282	20.802	19.286	0.005	0.004
65382	S1206T2T 161.00	18.608	17.139	18.611	17.143	0.003	0.003
64050	SE POLK3 345.00	25.954	24.059	25.956	24.062	0.002	0.003
64636	SYCMID25 161.00	46.122	42.869	46.125	42.872	0.003	0.003
64606	CB2 MID8 69.000	29.064	27.033	29.067	27.036	0.003	0.003
63803	CBLUFFS8 69.000	29.297	27.254	29.299	27.257	0.002	0.003
64607	CB3 MID8 69.000	29.648	27.590	29.651	27.593	0.003	0.003
65511	S911 8 69.000	32.090	29.873	32.093	29.876	0.003	0.003
65381	S1206T1T 161.00	20.784	19.051	20.787	19.054	0.003	0.003
64060	BOONVIL3 345.00	20.962	19.547	20.965	19.550	0.003	0.003
64198	GRIMES 3 345.00	21.848	20.374	21.851	20.377	0.003	0.003
65507	S907 8 69.000	20.900	20.657	20.903	20.660	0.003	0.003
65508	S908 8 69.000	19.719	19.719	19.722	19.722	0.003	0.003
65523	S923 8 69.000	19.402	19.402	19.405	19.405	0.003	0.003
65528	S928 8 69.000	15.885	15.885	15.888	15.888	0.003	0.003
65605	915TP3 8 69.000	15.957	15.957	15.960	15.960	0.003	0.003
31088	MCCREDIE 345.00	16.695	15.947	16.697	15.950	0.002	0.003
31409	OVERTON 161.00	17.193	16.397	17.196	16.400	0.003	0.003
57999	LVISTAW5 161.00	13.919	13.857	13.922	13.860	0.003	0.003
58068	WAGSTAF5 161.00	14.606	14.234	14.609	14.237	0.003	0.003
58082	HAWTHJT2 69.000	14.775	14.775	14.778	14.778	0.003	0.003
59184	LONEJK 5 161.00	13.342	12.583	13.345	12.586	0.003	0.003
59221	PLTCTY 5 161.00	14.093	13.873	14.096	13.876	0.003	0.003
59239	HVILLE 5 161.00	14.934	14.934	14.937	14.937	0.003	0.003
59803	SUB F 69.000	17.386	17.386	17.389	17.389	0.003	0.003
59809	SRNKRD 69.000	20.394	19.927	20.396	19.930	0.002	0.003
64056	MADISON3 345.00	18.471	17.289	18.474	17.292	0.003	0.003

64936	PAWNEEL7 115.00	11.239	11.239	11.242	11.242	0.003	0.003
66571	GR ISLD3 345.00	11.427	10.822	11.430	10.825	0.003	0.003
96043	7KINGDM 345.00	14.096	13.522	14.098	13.525	0.002	0.003
96044	7MCCRED 345.00	16.156	15.425	16.159	15.428	0.003	0.003
96320	5LEVASY 161.00	11.615	11.615	11.618	11.618	0.003	0.003
99938	R38_41 345.00	14.044	13.909	14.047	13.912	0.003	0.003
65388	S1221T9T 161.00	13.700	12.773	13.703	12.776	0.003	0.003
57995	MONTROS5 161.00	30.902	28.340	30.904	28.343	0.002	0.003
65723	NW68HOLY 345.00	9.139	8.506	9.141	8.508	0.002	0.002
65035	MCCOOL Y 345.00	6.956	6.487	6.958	6.489	0.002	0.002
58080	HAWTH 2 69.000	20.128	18.765	20.131	18.767	0.003	0.002
63875	RAUN 3 345.00	36.489	33.547	36.491	33.549	0.002	0.002
64199	GRIMES 5 161.00	26.386	24.501	26.387	24.503	0.001	0.002
65550	S950 8 69.000	25.799	23.967	25.802	23.969	0.003	0.002
64080	SYCAMOR3 345.00	22.938	21.320	22.940	21.322	0.002	0.002
64064	BONDRNT3 345.00	21.588	20.106	21.590	20.108	0.002	0.002
65380	S1201T1T 161.00	14.354	13.373	14.356	13.375	0.002	0.002
64196	NORWLK3 345.00	18.772	17.504	18.774	17.506	0.002	0.002
64839	GR ISLD4 230.00	16.939	15.796	16.941	15.798	0.002	0.002
64072	100 54 5 161.00	26.498	24.710	26.500	24.712	0.002	0.002
65513	S913 8 69.000	18.298	18.298	18.300	18.300	0.002	0.002
56856	SWISVAL6 230.00	18.877	17.932	18.878	17.934	0.001	0.002
57244	JARBALO3 115.00	17.934	17.458	17.935	17.460	0.001	0.002
65463	S1263 5 161.00	8.459	8.389	8.461	8.391	0.002	0.002
65542	S942 8 69.000	15.450	15.450	15.452	15.452	0.002	0.002
65595	S995 8 69.000	14.827	14.827	14.829	14.829	0.002	0.002
65606	915TP9 8 69.000	14.123	14.123	14.125	14.125	0.002	0.002
65624	SAC629 8 69.000	14.090	14.090	14.092	14.092	0.002	0.002
65627	W BROCK8 69.000	11.475	10.965	11.476	10.967	0.001	0.002
56765	HOYT 7 345.00	16.324	15.327	16.326	15.329	0.002	0.002
56774	SWISVAL7 345.00	13.379	12.725	13.382	12.727	0.003	0.002
58042	SPRGHL 5 161.00	11.472	11.446	11.474	11.448	0.002	0.002
58089	SUGRCRK2 69.000	15.856	15.856	15.858	15.858	0.002	0.002
58095	LIBRTYS2 69.000	13.782	12.940	13.784	12.942	0.002	0.002
64934	PAULINE7 115.00	15.096	14.394	15.098	14.396	0.002	0.002
66313	GR ISL1T 345.00	12.035	11.713	12.037	11.715	0.002	0.002
66315	GR ISL2T 345.00	12.276	11.776	12.278	11.778	0.002	0.002
96091	5LATHRP 161.00	7.789	7.789	7.791	7.791	0.002	0.002
635100	R52WIND3 345.00	12.946	12.523	12.948	12.525	0.002	0.002
639840	R34 345.00	12.971	12.539	12.973	12.541	0.002	0.002

64933	PAULINE3 345.00	7.178	6.971	7.180	6.973	0.002	0.002
65608	S915T1 8 69.000	13.412	13.412	13.414	13.414	0.002	0.002
65619	MUD LNG8 69.000	15.127	15.127	15.129	15.129	0.002	0.002
65623	SAC623 8 69.000	15.650	15.650	15.652	15.652	0.002	0.002
59236	RICHMND5 161.00	8.413	8.413	8.415	8.415	0.002	0.002
96071	5CLINTN 161.00	16.970	16.484	16.972	16.486	0.002	0.002
64635	SYCMID15 161.00	52.712	49.160	52.718	49.162	0.006	0.002
59811	SUB J 69.000	25.602	23.576	25.605	23.577	0.003	0.002
64897	MCCOOL 7 115.00	15.675	14.616	15.678	14.617	0.003	0.002
59263	SIBLEYP2 69.000	19.474	17.915	19.475	17.917	0.001	0.001
56766	JEC N 7 345.00	36.143	33.146	36.145	33.148	0.002	0.001
59396	LAKE 5 161.00	12.960	11.931	12.961	11.932	0.001	0.001
59231	STRNGR 5 161.00	18.491	16.933	18.492	16.934	0.001	0.001
59280	PLSHILL2 69.000	17.352	15.908	17.353	15.909	0.001	0.001
96120	5THMHIL 161.00	38.784	35.679	38.785	35.680	0.001	0.001
65655	FREM A 8 69.000	19.262	17.718	19.263	17.719	0.001	0.001
34007	LAKEFLD5 161.00	27.298	25.244	27.298	25.245	0.000	0.001
56863	MORRIS 6 230.00	13.378	12.429	13.378	12.430	0.000	0.001
96104	5NODWAY 161.00	13.069	12.148	13.070	12.149	0.001	0.001
64197	NORWLK5 161.00	23.428	21.796	23.429	21.797	0.001	0.001
31230	MONTGMRY 345.00	28.565	26.575	28.566	26.576	0.001	0.001
57163	HOYT 3 115.00	26.217	24.406	26.218	24.407	0.001	0.001
96090	5KINGDM 161.00	23.076	21.482	23.077	21.483	0.001	0.001
65050	PAULINE8 69.000	4.784	4.455	4.784	4.456	0.000	0.001
65664	FREM G 8 69.000	16.665	15.522	16.665	15.524	0.000	0.001
30648	GRAYSUM1 345.00	30.096	28.039	30.096	28.040	0.000	0.001
65033	HUMBLT Y 161.00	5.742	5.353	5.743	5.354	0.001	0.001
64061	BOONVIL5 161.00	21.324	19.883	21.326	19.884	0.002	0.001
63811	SUB701 8 69.000	18.056	16.837	18.057	16.838	0.001	0.001
65054	BPS SUB7 115.00	20.831	19.425	20.832	19.426	0.001	0.001
65575	S975 8 69.000	12.404	11.567	12.405	11.568	0.001	0.001
64848	HASTING7 115.00	16.117	15.030	16.118	15.031	0.001	0.001
56794	ROSEHIL7 345.00	14.567	13.585	14.568	13.586	0.001	0.001
65389	S1250T1T 161.00	13.280	12.161	13.282	12.162	0.002	0.001
53060	MCPC4 138.00	56.652	52.825	56.652	52.826	0.000	0.001
65576	S976 8 69.000	13.225	12.799	13.226	12.800	0.001	0.001
65656	FREM B 8 69.000	15.209	14.447	15.209	14.448	0.000	0.001
30233	CALIF 161.00	8.124	8.088	8.124	8.089	0.000	0.001
30677	GUTHRIE 161.00	8.274	8.274	8.275	8.275	0.001	0.001
33404	PERCHE A 161.00	8.373	8.373	8.374	8.374	0.001	0.001

56769	LANG 7 345.00	11.627	11.254	11.628	11.255	0.001	0.001
56770	MORRIS 7 345.00	10.512	10.049	10.512	10.050	0.000	0.001
58058	NLOUISB5 161.00	9.340	9.283	9.341	9.284	0.001	0.001
58062	SALSBRY5 161.00	11.556	11.556	11.557	11.557	0.001	0.001
58081	GLENARE2 69.000	12.969	12.969	12.970	12.970	0.001	0.001
59240	ADRIAN 5 161.00	8.139	8.139	8.140	8.140	0.001	0.001
59262	LIBMOS 2 69.000	9.953	9.953	9.954	9.954	0.001	0.001
59391	MARYV5 161.00	10.972	10.972	10.973	10.973	0.001	0.001
63816	SUB706 8 69.000	10.341	10.341	10.342	10.342	0.001	0.001
64084	EARLHAM5 161.00	9.302	9.302	9.303	9.303	0.001	0.001
64984	SWEET W3 345.00	9.572	9.126	9.573	9.127	0.001	0.001
66306	SIOUXC2T 345.00	16.486	15.626	16.487	15.627	0.001	0.001
96501	5MCBAIN 161.00	12.116	12.116	12.117	12.117	0.001	0.001
65386	S1214T1T 161.00	5.018	4.734	5.018	4.735	0.000	0.001
65458	S1258 5 161.00	6.013	6.013	6.014	6.014	0.001	0.001
65562	S962 8 69.000	5.768	5.768	5.769	5.769	0.001	0.001
65582	S982 8 69.000	4.002	4.002	4.003	4.003	0.001	0.001
65592	S992 8 69.000	6.755	6.755	6.756	6.756	0.001	0.001
65652	NCU903 8 69.000	6.222	6.213	6.222	6.214	0.000	0.001
646301	S1301 5 161.00	7.879	7.843	7.880	7.844	0.001	0.001
30923	LATHROP 161.00	7.463	7.463	7.464	7.464	0.001	0.001
59241	SED E 5 161.00	7.053	7.053	7.054	7.054	0.001	0.001
63820	HASTING5 161.00	7.745	7.745	7.746	7.746	0.001	0.001
63826	CLRNDA 5 161.00	7.505	7.505	7.506	7.506	0.001	0.001
64842	GUIDE R7 115.00	4.350	4.350	4.351	4.351	0.001	0.001
96194	2CHILLI 69.000	7.250	7.064	7.250	7.065	0.000	0.001
96198	2GALLTN 69.000	3.639	3.639	3.640	3.640	0.001	0.001

Note 1: For Breakers Rated on a Total Current Basis
Note 2: For Breakers Rated on a Symmetrical Current Basis