Definitive Interconnection System Impact Study for Generation Interconnection Requests

(DISIS-2011-002)

January 2012

Generation Interconnection

Southwest Power Pool

Revision History

Date or Version Number	Author	Change Description
1/31/2012	Southwest Power Pool	Report Issued

Executive Summary

Generation Interconnection customers have requested a Definitive Interconnection System Impact Study (DISIS) under the Generation Interconnection Procedures (GIP) in the Southwest Power Pool Open Access Transmission Tariff (OATT). The Interconnection Customers' requests have been clustered together for the following System Impact Cluster Study window which closed September 30, 2011. This System Impact Study analyzes the interconnecting of multiple generation interconnection requests associated with new generation totaling approximately 2,590.3 MW of new generation which would be located within the transmission systems of American Electric Power-West (AEPW), Midwest Energy Inc. (MIDW), Mid-Kansas Electric Power LLC (MKEC), Nebraska Public Power District (NPPD), Oklahoma Gas and Electric (OKGE), Omaha Public Power District (OPPD), Sunflower Electric Power Corporation (SUNC), Southwestern Public Service (SPS), Westar Energy (WERE) and Western Farmers Electric Cooperative (WFEC). The various generation interconnection requests have differing proposed in-service dates[1]. The generation interconnection requests included in this System Impact Cluster Study are listed in Appendix A by their queue number, amount, requested interconnection service, area, requested interconnection point, proposed interconnection point, and the requested in-service date.

Power flow analysis has indicated that for the power flow cases studied, 2,590.3 MW of nameplate generation may be interconnected with transmission system reinforcements within the SPP transmission system. Dynamic stability and power factor analysis has determined the need for reactive compensation in accordance with Order No. 661-A for wind farm interconnection requests and those requirements are listed for each interconnection request within the contents of this report. Dynamic stability analysis has determined that the transmission system will remain stable with the assigned Network Upgrades and necessary reactive compensation requirements.

The total estimated minimum cost for interconnecting the DISIS-2011-002 interconnection customers is $445,311,000. These costs are shown in Appendix E and F. Interconnection Service to DISIS-2011-002 interconnection customers is also contingent upon higher queued customers paying for certain required network upgrades. **The in service date for the DISIS customers will be deferred until the construction of these network upgrades can be completed.**

These costs do not include the Interconnection Customer Interconnection Facilities as defined by the SPP Open Access Transmission Tariff (OATT). This cost does not include additional network constraints in the SPP transmission system identified and shown in Appendix H.

Network Constraints listed in Appendix H are in the local area of the new generation when this generation is injected throughout the SPP footprint for the Energy Resource (ERIS) Interconnection

[1] The generation interconnection requests in-service dates will need to be deferred based on the required lead time for the Network Upgrades necessary. The Interconnection Customer's that proceed to the Facility Study will be provided a new in-service date based on the Facility Study's time for completion of the Network Upgrades necessary.

Request. Certain Interconnection Requests were also studied for Network Resource Interconnection Service (NRIS). Those constraints are also listed in Appendix H. Additional Network constraints will have to be verified with a Transmission Service Request (TSR) and associated studies. With a defined source and sink in a TSR, this list of Network Constraints will be refined and expanded to account for all Network Upgrade requirements.

The required interconnection costs listed in Appendix E and F do not include all costs associated with the deliverability of the energy to final customers. These costs are determined by separate studies if the Customer submits a Transmission Service Request through SPP's Open Access Same Time Information System (OASIS) as required by Attachment Z1 of the SPP OATT.

Table of Contents

Revision History i

Executive Summary ii

Table of Contents iv

Introduction 1

Model Development 1

Identification of Network Constraints 5

Determination of Cost Allocated Network Upgrades 5

Interconnection Facilities 6

Power Flow 7

Stability Analysis 10

Conclusion 15

Appendix 16

A. Generation Interconnection Requests Considered for Impact Study 17
B: Prior Queued Interconnection Requests 18
C: Study Groupings 19
D: Proposed Point of Interconnection One line Diagrams 20
E: Cost Allocation per Interconnection Request (Including Prior Queued Upgrades) 31
F: Cost Allocation per Proposed Study Network Upgrade 32
G: Power Flow Analysis (Constraints For Mitigation) 33
H: Power Flow Analysis (Other Constraints Not Requiring Mitigation) 34
I: Stability Study for Group 1 35
J: Stability Study for Group 2 36
K: Stability Study for Group 3 37
L: Stability Study for Group 4 38
M: Stability Study for Group 5 39
N: Stability Study for Group 6 40
O: Stability Study for Group 7 41
P: Stability Study for Group 8 42
Q: Stability Study for Group 9 43
R: Stability Study for Group 10 43
S: Stability Study for Group 11 44
T: Stability Study for Group 12 45
U: Stability Study for Group 13 46
V: Stability Study for Group 14 47
W: Stability Study for Group 15 48

Introduction

Pursuant to the Southwest Power Pool (SPP) Open Access Transmission Tariff (OATT), SPP has conducted this Definitive Interconnection System Impact Study (DISIS) for certain generation interconnection requests in the SPP Generation Interconnection Queue. These interconnection requests have been clustered together for the following System Impact Study window which closed September 30, 2011. The customers will be referred to in this study as the DISIS-2011-002 Interconnection Customers. This System Impact Study analyzes the interconnecting of multiple generation interconnection requests associated with new generation totaling 2,590.3 MW of new generation which would be located within the transmission systems of American Electric Power-West (AEPW), Midwest Energy Inc. (MIDW), Mid-Kansas Electric Power LLC (MKEC), Nebraska Public Power District (NPPD), Oklahoma Gas and Electric (OKGE), Omaha Public Power District (OPPD), Sunflower Electric Power Corporation (SUNC), Southwestern Public Service (SPS), Westar Energy (WERE) and Western Farmers Electric Cooperative (WFEC). The various generation interconnection requests have differing proposed in-service dates[2]. The generation interconnection requests included in this System Impact Study are listed in Appendix A by their queue number, amount, requested interconnection service, area, requested interconnection point, proposed interconnection point, and the requested in-service date.

The primary objective of this Definitive Interconnection System Impact Study is to identify the system constraints associated with connecting the generation to the area transmission system. The Impact and other subsequent Interconnection Studies are designed to identify attachment facilities, Network Upgrades and other Direct Assignment Facilities needed to accept power into the grid at each specific interconnection receipt point.

Model Development

Interconnection Requests Included in the Cluster

SPP has included all interconnection requests that submitted a Definitive Interconnection System Impact Study Agreement no later than September 30, 2011 and were subsequently accepted by Southwest Power Pool under the terms of the Generator Interconnection Procedures (GIP) that became effective March 30, 2010. The interconnection requests that are included in this study are listed in Appendix A.

Affected System Interconnection Requests - Also included in this Definitive Impact Study is a single Affected System Studies located on the Golden Spread Electric Cooperative, Inc. (GSEC) system,

[2] The generation interconnection requests in-service dates will need to be deferred based on the required lead time for the Network Upgrades necessary. The Interconnection Customer's that proceed to the Facility Study will be provided a new in-service date based on the competition of the Facility Study.

which shares connections to the SPS system. The Affected System Study Request has been given the designation ASGI-2011-004.

Previously Queued Interconnection Requests - The previous queued requests included in this study are listed in Appendix B. In addition to the Base Case Upgrades, the previous queued requests and associated upgrades were assumed to be in-service and added to the Base Case models. These projects were dispatched as Energy Resources with equal distribution across the SPP footprint.

Development of Base Cases

Power Flow - The 2011 series Transmission Service Request (TSR) Models 2012 spring, 2012 summer and winter peak, 2013 summer and winter peak, and the 2017 summer and winter peak scenario 0 cases were used for this study. After the cases were developed, each of the control areas' resources were then re-dispatched to account for the new generation requests using current dispatch orders.

Dynamic Stability – The 2011 series SPP Model Development Working Group (MDWG) Models 2012 winter and 2012 summer were used as starting points for this study.

Base Case Upgrades

The following facilities are part of the SPP Transmission Expansion Plan or the Balanced Portfolio or recently approved Priority Projects. These facilities, have an approved Notice to Construct (NTC), or are in construction stages and were assumed to be in-service at the time of dispatch and added to the base case models. The DISIS-2011-002 Customers have not been assigned cost for the below listed projects. The DISIS-2011-002 Customers Generation Facilities in service dates may need to be delayed until the completion of the following upgrades. If for some reason, construction on these projects is discontinued, additional restudies will be needed to determine the interconnection needs of the DISIS customers.

- Hitchland 230/115kV area projects[3]:
  - Hitchland – Moore County 230kV, scheduled for 6/1/2012 in-service
  - Hitchland – Ochiltree 230kV Project, scheduled for 12/31/2012 in-service
- Valliant – Hugo – Sunnyside 345kV, scheduled for 4/1/2012 in-service[4]
- Rose Hill – Sooner 345kV, scheduled for 6/15/2012 in-service[5]
- Balanced Portfolio Projects[6]:
  - Woodward – Border – TUCO 345kV project, scheduled for 5/19/2014 in-service
  - Iatan– Nashua 345kV, scheduled for 6/1/2015 in-service

[3] SPP Regional Reliability Projects identified in 2007 STEP. As of the writing of this report, SPP Project Tracking TAGIT shows some of these project's in-service dates have been delayed from the original 2010/2011 in-service dates.
[4] SPP Transmission Service Projects identified in SPP-2006-AG3-AFS-11.
[5] SPP Regional Reliability Project. Approved based on an order of the Kansas Corporation Commission issued in Docket no. 07-WSEE-715-MIS.
[6] Notice to Construct (NTC) issued June 2009.

    - Muskogee– Seminole 345kV, scheduled for 12/31/2012 in-service
    - Spearville – Post Rock 345kV, scheduled for 6/1/2012 in-service
    - Post Rock – Axtell 345kV, scheduled for 6/1/2013 in-service
    - Cleveland – Sooner 345kV, scheduled for 12/31/2012 in-service
    - Tap Stillwell – Swissvale 345kV line at West Gardner, scheduled for 6/1/2012 in-service
- Priority Projects[7]:
    - Hitchland – Woodward double circuit 345kV, scheduled for 6/30/2014 in-service
    - Woodward – Thistle double circuit 345kV, scheduled for 12/31/2014 in-service
    - Spearville – Clark double circuit 345kV, scheduled for 12/31/2014 in-service
    - Clark – Thistle double circuit 345kV, scheduled for 12/31/2014 in-service
    - Thistle – Wichita double circuit 345kV, scheduled for 12/31/2014 in-service
    - Thistle 345/138kV autotransformer, scheduled for 12/31/2014 in-service
    - Thistle – Flat Ridge 138kV, scheduled for 12/31/2014 in-service
- Various Mid-Kansas Electric Transmission System Upgrades[8]
    - Harper – Flat Ridge 138kV rebuild, scheduled for 12/31/2013 in-service
    - Flat Ridge – Medicine 138kV rebuild, scheduled for 12/31/2013 in-service
    - Pratt – Medicine Lodge 115kV rebuild, scheduled for 6/1/2013 in-service
    - Medicine Lodge 138/115kV autotransformer replacement, scheduled for 6/1/2013 in-service

Contingent Upgrades

The following facilities do not yet have approval. These facilities have been assigned to higher queued interconnection customers. These facilities have been included in the models for the DISIS-2011-002 study and are assumed to be in service. This list may not be all inclusive. The DISIS-2011-002 Customers at this time do not have responsibility for these facilities but may later be assigned the cost of these facilities if higher queued customers terminate their GIA or withdraw from the interconnection queue. The DISIS-2011-002 Customer Generation Facilities in service dates may need to be delayed until the completion of the following upgrades.

- Finney – Holcomb 345kV circuit #2, assigned to GEN-2006-044 interconnection customer[9]
- Central Plains – Setab 115kV transmission line, assigned to GEN-2007-013 interconnection customer
- Upgrades assigned to 1st Cluster Interconnection Customers:
    - Amarillo – Swisher 230kV terminal equipment replacement
    - Bushland – Potter County 230kV terminal equipment replacement
    - Grassland – Wolfforth 230kV
    - Spearville 345/115kV autotransformer, assigned to 1st Cluster and DISIS-2009-001 Interconnection Customers

[7] Notice to Construct (NTC) issued June 2010.
[8] SPP Transmission Service Projects identified in SPP-2007-AG3-AFS-9.
[9] Facility Study posted November 2008.

- Upgrades assigned to DISIS-2009-001 Interconnection Customers:
    - Fort Dodge – North Fort Dodge – Spearville 115kV circuit #2
    - Albion – Petersburg – Neligh 115kV rerate
    - Fort Randall – Madison County – Kelly 230kV rerate
- Upgrades assigned to DISIS-2010-001 Interconnection Customers:
    - Hitchland – Border 345kV
    - Post Rock 345/230kV autotransformer #2
    - South Hays – Hays Plant – Vine Street 115kV rebuild
    - Switch 2749 – Wildorado 69kV rebuild
- Upgrades assigned to DISIS-2010-002 Interconnection Customers:
    - Beaver County – Gray County 345kV
    - Clinton Junction – Elk City 138kV rebuild
    - St. John – Huntsville – Hutchinson Energy Center 115kV project
    - FPL Switch – Woodward 138kV rebuild
- Upgrades assigned to DISIS-2011-001 Interconnection Customers:
    - Spearville – Mullergren – Circle – Reno double circuit 345kV
    - Tatonga – Matthewson – Cimarron 345kV circuit #2
    - Rice County – Circle 230kV conversion
    - Rice County – Lyons 115kV rebuild
    - Rice County 230/115kV autotransformer
    - Lyons – Wheatland 115kV rerate
    - St. John – St. John 115kV rebuild
    - Benton – Wichita 345kV rerate
    - Mullergren 345/230kv autotransformer, (NRIS)
    - Cleo Corner – Glass Mountain 138kV rebuild, (NRIS)
    - Elk City 230/138kV autotransformer terminal rerate, (NRIS)
    - Deaf Smith – South Randle County (GI POI) – Plant X 230kV terminal equipment replacement, (NRIS)
    - Dover Switch – Okeene 138kV rebuild, (NRIS)
    - El Reno – Roman Nose – Southard 138kV rebuild, (NRIS)
    - Evans Energy Center – Maize 138kV rebuild, (NRIS)
    - Glass Mountain – Mooreland 138kV rebuild, (NRIS)

Potential Upgrades Not in the Base Case

Any potential upgrades that do not have a Notification to Construct (NTC) have not been included in the base case. These upgrades include any identified in the SPP Extra-High Voltage (EHV) overlay plan, or any other SPP planning study other than the upgrades listed above in the previous section.

Regional Groupings

The interconnection requests listed in Appendix A were grouped together in fifteen different regional groups based on geographical and electrical impacts. These groupings are shown in Appendix C.

To determine interconnection impacts, fifteen different dispatch variations of the spring base case models were developed to accommodate the regional groupings.

Power Flow - For each group, the various wind generating plants were modeled at 80% nameplate of maximum generation. The wind generating plants in the other areas were modeled at 20% nameplate of maximum generation. This process created fifteen different scenarios with each group being studied at 80% nameplate rating. These projects were dispatched as Energy Resources with equal distribution across the SPP footprint. Certain projects that requested Network Resource Interconnection Service were dispatched in an additional analysis into the balancing authority of the interconnecting transmission owner. This method allowed for the identification of network constraints that were common to the regional groupings that could then in turn have the mitigating upgrade cost allocated throughout the entire cluster. Other sensitivity analyses are also performed with each interconnection request modeled at 100% nameplate.

Peaking units were not dispatched in the 2012 spring model. To study peaking units' impacts, the 2012 summer and winter, 2013 summer and winter, and 2017 summer and winter seasonal models were chosen and peaking units were modeled at 100% of the nameplate rating and wind generating facilities were modeled at 10% of the nameplate rating. Each interconnection request was also modeled separately at 100% nameplate for certain analyses.

Dynamic Stability - For each group, all interconnection requests were studied at 100% nameplate output while the other groups were dispatched at 20% output for wind requests and 100% output for fossil requests.

Identification of Network Constraints

The initial set of network constraints were found by using PTI MUST First Contingency Incremental Transfer Capability (FCITC) analysis on the entire cluster grouping dispatched at the various levels mentioned above. These constraints were then screened to determine if any of the generation interconnection requests had at least a 20% Distribution Factor (DF) upon the constraint. Constraints that measured at least a 20% DF from at least one interconnection request were considered for mitigation. Interconnection Requests that were being studied for Network Resource Interconnection Service were studied in the additional NRIS analysis to determine if any constraint had at least a 3% DF. If so, these constraints were considered for mitigation.

Determination of Cost Allocated Network Upgrades

Cost Allocated Network Upgrades of wind generation interconnection requests were determined using the 2012 spring model. Cost Allocated Network Upgrades of peaking units was determined using the 2017 summer peak model. A MUST FCITC analysis was performed to determine the Power Transfer Distribution Factors (PTDF), a distribution factor with no contingency that each generation interconnection request had on each new upgrade. The impact each generation interconnection request had on each upgrade project was weighted by the size of each request.

Finally the costs due by each request for a particular project were then determined by allocating the portion of each request's impact over the impact of all affecting requests.

For example, assume that there are three Generation Interconnection requests, X, Y, and Z that are responsible for the costs of Upgrade Project '1'. Given that their respective PTDF for the project have been determined, the cost allocation for Generation Interconnection request 'X' for Upgrade Project 1 is found by the following set of steps and formulas:

- Determine an Impact Factor on a given project for all responsible GI requests:

  Request X Impact Factor on Upgrade Project 1 = PTDF(%)(X) * MW(X) = X1

  Request Y Impact Factor on Upgrade Project 1 = PTDF(%)(Y) * MW(Y) = Y1

  Request Z Impact Factor on Upgrade Project 1 = PTDF(%)(Z) * MW(Z) = Z1

- Determine each request's Allocation of Cost for that particular project:

$$\text{Request X's Project 1 Cost Allocation (\$)} = \frac{\text{Network Upgrade Project 1 Cost(\$)} * X1}{X1 + Y1 + Z1}$$

- Repeat previous for each responsible GI request for each Project

The cost allocation of each needed Network Upgrade is determined by the size of each request and its impact on the given project. This allows for the most efficient and reasonable mechanism for sharing the costs of upgrades.

Credits for Amounts Advanced for Network Upgrades

Interconnection Customer shall be entitled to credits in accordance with Attachment Z1 of the SPP Tariff for any Network Upgrades including any tax gross-up or any other tax-related payments associated with the Network Upgrades, and not refunded to the Interconnection Customer.

Interconnection Facilities

The requirement to interconnect the 2,590.3 MW of generation into the existing and proposed transmission systems in the affected areas of the SPP transmission footprint consist of the necessary cost allocated shared facilities listed in Appendix F by upgrade. The interconnection requirements for the cluster total $445,311,000. Interconnection Facilities specific to each generation interconnection request are listed in Appendix E. A preliminary one-line drawing for each generation interconnection request are listed in Appendix D.

A list of constraints with greater than or equal to a 20% OTDF that were identified and used for mitigation are listed in Appendix G. Other Network Constraints, those between 3% and 20% OTDF, are shown in Appendix H. With a defined source and sink in a TSR, this list of Network Constraints will be refined and expanded to account for all Network Upgrade requirements.

Power Flow

Power Flow Analysis Methodology

The Southwest Power Pool (SPP) Criteria states that:

> "The transmission system of the SPP region shall be planned and constructed so that the contingencies as set forth in the Criteria will meet the applicable *NERC Reliability Standards* for transmission planning. All MDWG power flow models shall be tested to verify compliance with the System Performance Standards from NERC Table 1 – Category A."

The ACCC function of PSS/E was used to simulate single element and special (i.e., breaker-to-breaker, multi-element, etc) contingencies in portions or all of the modeled control areas of SPP, as well as, other control areas external to SPP and the resulting scenarios analyzed. This satisfies the "more probable" contingency testing criteria mandated by NERC and the SPP criteria.

Power Flow Analysis

A power flow analysis was conducted for each Interconnection Customer's facility using modified versions of the 2012 spring peak, 2012 summer and winter peak, 2013 summer and winter peak, and 2017 summer and winter peak models. The output of the Interconnection Customer's facility was offset in each model by a reduction in output of existing online SPP generation. This method allows the request to be studied as an Energy Resource (ER) Interconnection Request. Certain requests that requested Network Resource Interconnection Service (NRIS) had an additional analysis conducted for displacing resources in the interconnecting Transmission Owner's balancing authority.

This analysis was conducted assuming that previous queued requests in the immediate area of these interconnect requests were in-service. The analysis of each Customer's project indicates that criteria violations will occur on the NPPD, OKGE, OPPD, SPS, WERE and WFEC transmission systems under steady state and contingency conditions in the peak seasons.

Cluster Group 1 (Woodward Area)

In addition to the 5,310.0 MW of previously queued generation in the area, 404.4 MW of new interconnection service was studied. Potential dynamic instability was observed for the addition of the requests in this group. Woodward/Tatonga area voltages were seen to depress and collapse under contingency. To relieve this issue a second 345kV circuit is needed between Woodward – Tatonga. This upgrade is also needed for Groups 3 and 7 because of the extreme power flow bias from West to East in the study cases. Additionally, for interconnection customers that requested NRIS service, a number of additional upgrades were identified.

Cluster Group 2 (Hitchland Area)

In addition to the 3,943.2 MW of previously queued generation in the area, 0 MW of new interconnection service was studied. No new constraints were found in this area.

Cluster Group 3 (Spearville Area)

In addition to the 5,293.8 MW of previously queued generation in the area, 480.0 MW of new interconnection service was studied. Significant outlet constraints are identified in the area due to the amount of generation requesting interconnection. In addition to contributing to voltage collapse in the Woodward/Tatonga area under contingency, power flow analysis also shows Group 3 requests also contribute to constraints on the Wichita – Viola (Sumner Co, KS) – Woodring 345kV. To mitigate, a new 345kV was constructed from Viola – Rose Hill. This upgrade will also be needed in Group 8. Additionally, for interconnection customers that requested NRIS, a number of additional upgrades were identified.

Cluster Group 4 (Mingo/NW Kansas Group)

In addition to the 924.0 MW of previously queued generation in the area, 0.0 MW of new interconnection service was studied. No new constraints were found in this area.

Cluster Group 5 (Amarillo Area)

In addition to the 2,132.6 MW of previously queued generation in the area, 0.0 MW of new interconnection service was studied. No new constraints were found in this area.

Cluster Group 6 (South Texas Panhandle/New Mexico)

In addition to the 2,330.7 MW of previously queued generation in the area, 617.0 MW of new interconnection service was studied. Most of the outlet issues and network constraints in this area are mitigated through the addition of a TUCO – Potter County 345kV and replacement of terminal equipment on the Lubbock South – Jones – TUCO 230kV transmission line. There are also constraints under contingency in the Grassland area that are mitigated through the addition of a second 230kV circuit between Grassland and GEN-2011-058 POI. Additionally, for interconnection customers that requested NRIS, a number of additional upgrades were identified.

Cluster Group 7 (Southwestern Oklahoma)

In addition to the 1,734.0 MW of previously queued generation in the area, 257.0 MW of new interconnection service was studied. As in Groups 1 and 3, GEN-2011-049 also contributes to the excessive loadings and depressed voltages along the Woodward – Northwest corridor which is mitigated by adding a second 345kV circuit between Woodward and Tatonga. Additionally, for interconnection customers that requested NRIS, a number of additional upgrades were identified.

Cluster Group 8 (South Central Kansas/North Oklahoma)

In addition to the 2,185.9 MW of previously queued generation in the area, 450.4 MW of new interconnection service was studied. Outlet constraints on the Wichita – Viola (Sumner Co, KS) – Woodring 345kV will be mitigated by a new 345kV from Viola – Rose Hill. Additionally, for interconnection customers that requested NRIS, a number of additional upgrades were identified.

Cluster Group 9/10 (Nebraska)

In addition to the 1,767.6 MW of previously queued generation in the area, 160.7 MW of new interconnection service was studied. Outlet issues require mitigation for both of the two larger requests in this group. To interconnect GEN-2010-044, new 115kV transmission line is needed from Harbine – Crete. The requirements to interconnect GEN-2011-055 include rebuilding and reconfiguration of the POI substation, as well as, replacement of some additional terminal

equipment at other substations. Additionally, for interconnection customers that requested NRIS, a number of additional upgrades were identified.

Cluster Group 11 (North Central Kansas)

In addition to the 1,495.1 MW of previously queued generation in the area, 0.0 MW of new interconnection service was studied. No new constraints were found in this area.

Cluster Group 12 (Northwest Arkansas)

In addition to the 0.0 MW of previously queued generation in the area, 0.0 MW of new interconnection service was studied. No new constraints were found in this area.

Cluster Group 13 (Northwest Missouri)

In addition to the 1,846.1 MW of previously queued generation in the area, 0.0 MW of new interconnection service was studied. No new constraints were found in this area.

Cluster Group 14 (South Central Oklahoma)

In addition to the 200.0 MW of previously queued generation in the area, 220.8 MW of new interconnection service was studied. GEN-2011-050 overloads the Comanche – Comanche Tap 69kV under contingency analysis which requires a rebuild. Additionally, for interconnection customers that requested NRIS, a number of additional upgrades were identified.

Cluster Group 15 (reserved)

This group has been retired and all prior Group 15 requests have been re-designated as Group 9/10 requests.

Stability Analysis

A stability analysis was conducted for each Interconnection Customer's facility using modified versions of the 2012 summer and 2012 winter peak models. The stability analysis was conducted with all upgrades in service that were identified in the power flow analysis. For each group, the interconnection requests were studied at 100% nameplate output while the other groups were dispatched at 20% output for wind requests and 100% output for fossil requests. The output of the Interconnection Customer's facility was offset in each model by a reduction in output of existing online SPP generation. The following synopsis is included for each group. The entire stability study for each group can be found in the Appendices.

Cluster Group 1 (Woodward Area)

The Group 1 stability study was conducted by Mitsubishi Electric Power Products Inc. (MEPPI). The stability analysis indicates that the addition of requests in Group 1 will cause potential unstable conditions to the transmission system. Stability Analysis found these conditions to be mitigated by the addition of a second 345kV circuit from Woodward to Tatonga. . With the power factor requirements and all network upgrades in service, all interconnection request in Group 1 will meet FERC Order #661A low voltage ride through (LVRT) requirements.

Power Factor Requirements:

Request	Size (MW)	Generator Model	Point of Interconnection	Power Factor Requirement at POI*	
				Lagging (supplying)	Leading (absorbing)
GEN-2011-051	104.4	Vestas V90 1.8MW	Tap Tatonga – Woodward 345kV	0.95	0.95
GEN-2011-054	299	Siemens 2.3MW	Cimarron 345kV	0.95	1.00

*As reactive power is required for all projects, the final requirement in the GIA will be the pro-forma 95% lagging to 95% leading at the point of interconnection.

Cluster Group 2 (Hitchland Area)

There was no stability analysis conducted in the Hitchland area due to no requests in the area.

Cluster Group 3 (Spearville Area)

The Group 3 stability study was conducted by Burns & McDonnell . The stability analysis indicates that requests in Group 3 will be stable for each contingency specified by SPP and the nearby areas will retain angular, frequency and voltage stability. With the power factor requirements and all network upgrades in service, all interconnection request in Group 3 will meet FERC Order #661A low voltage ride through (LVRT) requirements.

Power Factor Requirements:

Request	Size (MW)	Generator Model	Point of Interconnection	Power Factor Requirement at POI	
				Lagging (supplying)	Leading (absorbing)
GEN-2010-061	179.4	Siemens 2.3MW	Tap on Spearville-Post Rock 345kV	0.95	1.00
GEN-2011-043	149.5	Siemens 2.3MW	Thistle 345kV	0.95	1.00
GEN-2011-044	149.5	Siemens 2.3MW	Thistle 345kV	0.95	1.00

*As reactive power is required for all projects, the final requirement in the GIA will be the pro-forma 95% lagging to 95% leading at the point of interconnection.

Cluster Group 4 (Mingo Area)

There was no stability analysis conducted in the Mingo area due to no requests in the area.

Cluster Group 5 (Amarillo Area)

There was no stability analysis conducted in the Amarillo area due to no requests in the area.

Cluster Group 6 (South Texas Panhandle/New Mexico)

The Group 6 stability study was conducted by Excel Engineering, Inc. The Group 6 projects were seen to need additional network upgrades to interconnect the requested projects. A new 345kV line from Potter to Tuco was selected to mitigate the potential instability and oscillations observed within the transmission system. With the power factor requirements and all network upgrades in service, all interconnection request in Group 6 will meet FERC Order #661A low voltage ride through (LVRT) requirements and the transmission system will remain stable.

Power Factor Requirements:

Request	Size (MW)	Generator Model	Point of Interconnection	Power Factor Requirement at POI	
				Lagging (supplying)	Leading (absorbing)
GEN-2011-045	205 Winter 180 Summer	GENROU	Jones_bus2 230kV (526338)	0.95	0.95
GEN-2011-046	27 Winter 23 Summer	GENROU	Tucumcari 115kV (524477)	0.95	0.95
GEN-2011-048	175 Winter 165 Summer	GENROU	Mustang 230kV (527151)	0.95	0.95
GEN-2011-058	200	SANY SE93 2.0MW	Tap on Grassland to Borden 230kV line (G11_058-TAP, 562089)	0.989	0.999
ASGI-2011-004	19.2	GE 1.6MW	Jones_bus2 230kV (526338)	0.989	0.95

*As reactive power is required for all projects, the final requirement in the GIA will be the pro-forma 95% lagging to 95% leading at the point of interconnection.

Cluster Group 7 (Southwest Oklahoma Area)

The Group 7 stability analysis was conducted by SPP Staff. The results showed neither angular nor voltage instability problems in the SPP system for all contingencies analized. With the power factor requirements and all network upgrades in service, all interconnection request in Group 7 will meet FERC Order #661A low voltage ride through (LVRT) requirements and the transmission system will remain stable.

Power Factor Requirements:

Request	Size (MW)	Generator Model	Point of Interconnection	Power Factor Requirement at POI	
				Lagging (supplying)	Leading (absorbing)
GEN-2011-037	7	GE 1.6MW	Tap Anardarko – Paradise 138 kV	0.99	0.97
GEN-2011-049	250.7	Siemens 2.3MW	Border 345kV	0.99	0.95

*As reactive power is required for all projects, the final requirement in the GIA will be the pro-forma 95% lagging to 95% leading at the point of interconnection.

Cluster Group 8 (South Central Kansas/North Oklahoma)

The Group 8 stability analysis was conducted by S&C Electric (S&C). The results showed neither angular nor voltage instability problems in the SPP system for all contingencies analized. With the power factor requirements and all network upgrades in service, all interconnection request in Group 8 will meet FERC Order #661A low voltage ride through (LVRT) requirements and the transmission system will remain stable.

Power Factor Requirements:

Request	Size (MW)	Generator Model	Point of Interconnection	Power Factor Requirement at POI	
				Lagging (supplying)	Leading (absorbing)
GEN-2011-041	149.5	Siemens 2.3MW	Tap Wichita – Woodring 345kV line	0.95	0.97
GEN-2011-042	149.5	Siemens 2.3MW	Tap Wichita – Woodring 345kV line	0.95	0.97
GEN-2011-057	150.4	GE 1.6MW	Creswell 138kV	0.97	0.987

Cluster Group 9/10 (Nebraska)

The Group 9 stability analysis was conducted by Pterra Inc. There were no observed impacts on the stability performance of the SPP system for the contingencies simulated; the studied request stays on-line and stable. With the power factor requirements and all network upgrades in service, all interconnection request in Group 9 will meet FERC Order #661A low voltage ride through (LVRT) requirements and the transmission system will remain stable.

Power Factor Requirements:

Request	Size (MW)	Generator Model	Point of Interconnection	Power Factor Requirement at POI	
				Lagging (supplying)	Leading (absorbing)
GEN-2010-044	99	Siemens 3.0MW	Tap Fairbury – Beatrice 115kV	0.963	1.0
GEN-2011-055	52.8	GE 1.6MW	South Sterling 69kV	0.95	1.0
GEN-2011-056	65.7	GENSAL	Gothenburg/North Platte/Johnson 115kV	0.95	0.95

*As reactive power is required for all projects, the final requirement in the GIA will be the pro-forma 95% lagging to 95% leading at the point of interconnection.

Cluster Group 11 (North Central Kansas Area)

There was no stability analysis conducted in the North Central Kansas area due to no requests in the area.

Cluster Group 12 (Northwest Arkansas Area)

There was no stability analysis conducted in the Northwest Arkansas area due to no requests in the area.

Cluster Group 13 (Northwest Missouri Area)

There was no stability analysis conducted in the Northwest Missouri area due to no requests in the area.

Cluster Group 14 (South Central Oklahoma)

The Group 14 stability analysis was conducted by SPP Staff. The South Central Oklahoma stability analysis revealed no stability issues with the study requests. The stability analysis determined that no generator tripping or system instability occurs from interconnecting Group 14 projects. With the power factor requirements and all network upgrades in service, all interconnection request in Group 13 will meet FERC Order #661A low voltage ride through (LVRT) requirements and the transmission system will remain stable.

Power Factor Requirements:

Request	Size (MW)	Generator Model	Point of Interconnection	Power Factor Requirement at POI	
				Lagging (supplying)	Leading (absorbing)
GEN-2011-040	110.4	Siemens 2.3	Tap Ratliff – Poolville 138kV	1.00	0.982
GEN-2011-050	109.8	Vestas V90 1.8MW	Tap Rush Springs – Marlow 138 kV	0.954	0.995

*As reactive power is required for all projects, the final requirement in the GIA will be the pro-forma 95% lagging to 95% leading at the point of interconnection.

Cluster Group 15 (reserved)

This group has been retired and all prior Group 15 requests have been re-designated as Group 9/10 requests.

Conclusion

The minimum cost of interconnecting 2,590.3 MW of new interconnection requests included in this Definitive Interconnection System Impact Study is estimated at $445,311,000 for the Allocated Network Upgrades and Transmission Owner Interconnection Facilities are listed in Appendix E and F. These costs do not include the cost of upgrades of other transmission facilities listed in Appendix I which are Network Constraints.

These interconnection costs do not include any cost of Network Upgrades determined to be required by short circuit analysis. These studies will be performed if the Interconnection Customer executes the appropriate Interconnection Facilities Study Agreement and provides the required data along with demonstration of Site Control and the appropriate deposit. At the time of the Interconnection Facilities Study, a better determination of the interconnection facilities may be available.

The required interconnection costs listed in Appendices E, and F, and other upgrades associated with Network Constraints do not include all costs associated with the deliverability of the energy to final customers. These costs are determined by separate studies if the Customer submits a Transmission Service Request (TSR) through SPP's Open Access Same Time Information System (OASIS) as required by Attachment Z1 of the SPP Open Access Transmission Tariff (OATT).

Appendix

A. Generation Interconnection Requests Considered for Impact Study

See next page.

A: Generation Interconnection Requests Considered for Impact Study

Request	Amount	Service	Area	Requested Point of Interconnection	Proposed Point of Interconnection	Requested In-Service Date	In Service Date Delayed Until no earlier than*
ASGI-2011-004	20.0	ER	SPS	Pleasant Hill 69kV	Pleasant Hill 69kV		TBD
GEN-2010-044	99.0	ER/NR	NPPD	Tap Harbine - Beatrice 115kV	Harbine 115kV	11/1/2012	TBD
GEN-2010-061	180.0	ER/NR	MIDW	Tap Post Rock - Spearville 345kV	Tap Post Rock - Spearville 345kV	12/31/2012	12/31/2014
GEN-2011-037	7.0	ER	WFEC	Blue Canyon 5 138kV	Blue Canyon 5 138kV	1/1/2012	TBD
GEN-2011-040	111.0	ER/NR	OKGE	Pooleville 138kV	Tap Ratliff - Pooleville 138kV	12/31/2012	TBD
GEN-2011-041	150.0	ER	WERE	Tap Wichita - Woodring (Sumner County) 345kV	Tap Wichita - Woodring (Sumner County) 345kV	12/31/2013	12/31/2014
GEN-2011-042	150.0	ER/NR	WERE	Tap Wichita - Woodring (Sumner County) 345kV	Tap Wichita - Woodring (Sumner County) 345kV	12/31/2014	12/31/2014
GEN-2011-043	150.0	ER	SUNCMKEC	Thistle 345kV	Thistle 345kV	12/31/2013	12/31/2014
GEN-2011-044	150.0	ER/NR	SUNCMKEC	Thistle 345kV	Thistle 345kV	12/31/2014	12/31/2014
GEN-2011-045	205.0	ER/NR	SPS	Jones 230kV	Jones 230kV	6/1/2013	TBD
GEN-2011-046	27.0	ER/NR	SPS	Tucumcari 115kV	Tucumcari 115kV	6/1/2013	TBD
GEN-2011-048	165.0	ER/NR	SPS	Mustang 230kV	Mustang 230kV	3/1/2013	TBD
GEN-2011-049	250.0	ER/NR	OKGE	Border 345kV	Border 345kV	12/31/2013	TBD
GEN-2011-050	109.8	ER/NR	AEPW	Tap Rush Springs - Marlow 138kV	Tap Rush Springs - Marlow 138kV	12/31/2013	TBD
GEN-2011-051	104.4	ER/NR	OKGE	Tap Woodward - Tatonga 345kV	Tap Woodward - Tatonga 345kV	12/31/2013	12/31/2014
GEN-2011-054	300.0	ER/NR	OKGE	Cimarron 345kV	Cimarron 345kV	11/30/2013	12/31/2014
GEN-2011-055	50.0	ER/NR	OPPD	South Sterling 69kV	South Sterling 69kV	12/31/2012	TBD
GEN-2011-056	11.7	ER	NPPD	Jeffrey 115kV, John Lake 1 115kV, and John Lake 2 115kV	Jeffrey 115kV, John Lake 1 115kV, and John Lake 2 115kV	6/30/2012	TBD
GEN-2011-057	150.4	ER	WERE	Creswell 138kV	Creswell 138kV	12/31/2013	TBD
GEN-2011-058	200.0	ER/NR	SPS	Tap Grassland - Borden 230kV	Tap Grassland - Borden 230kV	11/30/2012	TBD
TOTAL	**2,590.3**						

*request dependent upon Priority Projects or Balanced Portfolio may be delayed until 12/31/2014.
Other projects in service date to be determined after Facility Study.

B: Prior Queued Interconnection Requests

See next page.

B: Prior Queued Interconnection Requests

Request	Amount	Area	Requested/Proposed Point of Interconnection	Status or In-Service Date
ASGI-2010-001	400	AECI	Tap Cooper - Fairport (AECI) 345kV	AECI queue Affected Study
ASGI-2010-004	50	AECI	Tap Queen City (AECI) - Lancaster (AECI) 69kV	AECI queue Affected Study
ASGI-2010-005	99	AECI	Lathrop (AECI) 161kV	AECI queue Affected Study
ASGI-2010-006	150	AECI	Tap Fairfax Tap - Fairfax (AECI) 138kV	AECI queue Affected Study
ASGI-2010-007	150	AECI	Tap Fairfax Tap - Fairfax (AECI) 138kV	AECI queue Affected Study
ASGI-2010-009	201	AECI	Osborn (AECI) 161kV	AECI queue Affected Study
ASGI-2010-010	42	SPS	Lovington 115kV	Affected Study
ASGI-2010-011	48	SPS	TC-Texas County 69kV	Affected Study
ASGI-2010-020	50	SPS	Tap LE-Tatum - LE-Crossroads 69kV	Under Study (DISIS-2010-002)
ASGI-2010-021	36.6	SPS	Tap LE-Saunders Tap - LE-Anderson 69kV	Under Study (DISIS-2010-002)
ASGI-2011-001	28.8	SPS	Lovington 115kV	Under Study (DISIS-2010-002)
ASGI-2011-002	10	SPS	Herring 115kV	AECI queue Affected Study
ASGI-2011-003	10	SPS	Hendricks 115kV	AECI queue Affected Study
GEN-2001-014	96	WFEC	Ft Supply 138kV	On-Line
GEN-2001-026	74	WFEC	Washita 138kV	On-Line
GEN-2001-033	180	SPS	San Juan Tap 230kV	On-Line
GEN-2001-036	80	SPS	Norton 115kV	On-Line
GEN-2001-037	100	OKGE	FPL Moreland Tap 138kV	On-Line
GEN-2001-039A	105	SUNCMKEC	Tap Greensburg - Ft Dodge 115kV	On Schedule for 2012
GEN-2001-039M	100	SUNCMKEC	Central Plains Tap 115kV	On-Line
GEN-2002-004	200	WERE	Latham 345kV	On-Line at 150MW
GEN-2002-005	120	WFEC	Red Hills Tap 138kV	On-Line
GEN-2002-008	240	SPS	Hitchland 345kV	On-Line at 120MW
GEN-2002-009	80	SPS	Hansford 115kV	On-Line
GEN-2002-022	240	SPS	Bushland 230kV	On-Line
GEN-2002-023N	0.8	NPPD	Harmony 115kV	On-Line
GEN-2002-025A	150	SUNCMKEC	Spearville 230kV	On-Line
GEN-2003-004 GEN-2004-023 GEN-2005-003	151.2	WFEC	Washita 138kV	On-Line
GEN-2003-005	100	WFEC	Anadarko - Paradise (Blue Canyon) 138kV	On-Line
GEN-2003-006A	200	SUNCMKEC	Elm Creek 230kV	On-Line
GEN-2003-019	250	MIDW	Smoky Hills Tap 230kV	On-Line
GEN-2003-020	160	SPS	Martin 115kV	On-Line at 80MW
GEN-2003-021N	75	NPPD	Ainsworth Wind Tap 115kV	On-Line
GEN-2003-022	120	AEPW	Washita 34.5kV	On-Line
GEN-2004-005N	30	NPPD	St Francis 115kV	IA Pending
GEN-2004-014	154.5	SUNCMKEC	Spearville 230kV	On Schedule for 2012
GEN-2004-020	27	AEPW	Washita 34.5kV	On-Line
GEN-2004-023N	75	NPPD	Columbus County 115kV	On Schedule for ????
GEN-2005-005	18	OKGE	FPL Moreland Tap 138kV	IA Pending
GEN-2005-008	120	OKGE	Woodward 138kV	On-Line
GEN-2005-012	250	SUNCMKEC	Spearville 345kV	On Schedule for 2012
GEN-2005-013	201	WERE	Tap Latham - Neosho (Caney River) 345kV	On-Line
GEN-2005-017	340.0	SPS	Tap Hitchland - Potter 345kV	On Suspension

Request	Amount	Area	Requested/Proposed Point of Interconnection	Status or In-Service Date
GEN-2006-002	101	AEPW	Sweetwater 230kV	On-Line
GEN-2006-006	205.5	SUNCMKEC	Spearville 345kV	IA Pending
GEN-2006-014	300	MIPU	Tap Maryville - Midway 161kV	On Suspension
GEN-2006-017	300	MIPU	Tap Maryville - Midway 161kV (GEN-2006-014 TAP)	On Suspension
GEN-2006-018	170	SPS	Antelope 230kV	On-Line
GEN-2006-020N	42	NPPD	Bloomfield 115kV	On-Line
GEN-2006-020S	18.9	SPS	DWS Frisco 115kV	On Schedule for 3/2012
GEN-2006-021	101	SUNCMKEC	Flat Ridge Tap 138kV	On-Line
GEN-2006-022	150	SUNCMKEC	Pratt 115kV	On Suspension
GEN-2006-024S	19.8	WFEC	Buffalo Bear Tap 69kV	On-Line
GEN-2006-026	502	SPS	Hobbs 230kV	On-Line
GEN-2006-031	75	MIDW	Knoll 115kV	On-Line
GEN-2006-032	200	MIDW	South Hays 230kV	On Suspension
GEN-2006-034	81	SUNCMKEC	Kanarado 115kV	On Suspension
GEN-2006-035	225	AEPW	Sweetwater 230kV	On Schedule for 2011
GEN-2006-037N1	75	NPPD	Broken Bow 115kV	On Suspension
GEN-2006-038N005	80	NPPD	Broken Bow 115kV	On Schedule for 2012
GEN-2006-038N019	80	NPPD	Petersburg 115kV	On-Line
GEN-2006-039	400	SPS	Tap and Tie both Potter - Plant X 230kV and Bushland - Deaf Smith (South Randle County) 230kV	On Suspension
GEN-2006-040	108	SUNCMKEC	Mingo 115kV	On Schedule for 2012
GEN-2006-043	99	AEPW	Sweetwater 230kV	On-Line
GEN-2006-044	370	SPS	Hitchland 345kV	On Schedule for 2012
GEN-2006-044N	40.5	NPPD	Petersburg 115kV	On-Line
GEN-2006-044N02	100.5	NPPD	Tap Ft Randle - Columbus (Madison County) 230kV	IA Pending
GEN-2006-045	240	SPS	Tap and Tie both Potter - Plant X 230kV and Bushland - Deaf Smith (South Randle County) 230kV	On Schedule for 2012
GEN-2006-046	131	OKGE	Dewey 138kV	On-Line
GEN-2006-047	240	SPS	Tap and Tie both Potter - Plant X 230kV and Bushland - Deaf Smith (South Randle County) 230kV	On Suspension
GEN-2006-049	400	SPS	Tap Finney - Hitchland (Stevens County) 345kV	On Schedule for 2014
GEN-2007-002	160	SPS	Grapevine 115kV	On Suspension
GEN-2007-006	160	OKGE	Roman Nose 138kV	On Suspension
GEN-2007-011	135	SUNCMKEC	Syracuse 115kV	On Schedule
GEN-2007-011N08	81	NPPD	Bloomfield 115kV	On-Line
GEN-2007-013	99	SUNCMKEC	Selkirk 115kV	On Suspension
GEN-2007-015	135	WERE	Tap Kelly(WERE) - S1399(OPPD) 161kV	On Suspension
GEN-2007-017	100.5	MIPU	Tap Maryville - Midway (GEN-2006-014 TAP) 161kV	On Suspension
GEN-2007-021	201	OKGE	Tatonga 345kV	On Schedule for 2014
GEN-2007-025	300	WERE	Tap Wichita - Woodring (Sumner County) 345kV	On Schedule for 2012
GEN-2007-032	150	WFEC	Tap Clinton Junction - Clinton 138kV	On Schedule for 2012
GEN-2007-038	200	SUNCMKEC	Spearville 345kV	On Schedule for 2015
GEN-2007-040	200	SUNCMKEC	Tap Holcomb - Spearville (Gray County) 345kV	On Schedule for 2012
GEN-2007-043	200	OKGE	Minco 345kV	On-Line
GEN-2007-044	300	OKGE	Tatonga 345kV	On Schedule for 2014
GEN-2007-046	199.5	SPS	Hitchland 115kV	On Schedule for 2014
GEN-2007-048	400	SPS	Tap Amarillo S - Swisher 230kV	On Schedule for 2014
GEN-2007-050	170	OKGE	Woodward EHV 138kV	On-Line at 150MW

Request	Amount	Area	Requested/Proposed Point of Interconnection	Status or In-Service Date
GEN-2007-051	200	WFEC	Mooreland 138kV	On Schedule for 2014
GEN-2007-052	150	WFEC	Anadarko 138kV	On-Line
GEN-2007-053	110	MIPU	Tap Maryville - Midway (GEN-2006-014 TAP) 161kV	On Schedule for 2013
GEN-2007-057	34.5	SPS	Moore County East 115kV	On Schedule for 2014
GEN-2007-062	765	OKGE	Woodward EHV 345kV	On Schedule for 2014
GEN-2008-003	101	OKGE	Woodward EHV 138kV	On-Line
GEN-2008-008	60	SPS	Graham 69kV	On Suspension
GEN-2008-009	60	SPS	San Juan Tap 230kV	On Schedule for 2014
GEN-2008-013	300	OKGE	Tap Wichita - Woodring (South of GEN-2007-025) 345kV	On Schedule for 2012
GEN-2008-014	150	SPS	Tap Tuco- Oklaunion 345kV	On Schedule for 2014
GEN-2008-016	248	SPS	Grassland 230kV	IA Pending
GEN-2008-017	300	SUNCMKEC	Setab 345kV	On Schedule for 2014
GEN-2008-018	405	SPS	Finney 345kV	On Schedule for 2012
GEN-2008-019	300	OKGE	Tatonga 345kV	On Schedule for 2015
GEN-2008-021	42.0	WERE	Wolf Creek 345kV	On-Line
GEN-2008-022	300	SPS	Tap Eddy Co - Tolk (Chaves County) 345kV	On Schedule for 2015
GEN-2008-023	150	AEPW	Hobart Junction 138kV	On Schedule for 2012
GEN-2008-025	101	SUNCMKEC	Ruleton 115kV	On Schedul for 2015
GEN-2008-029	250	OKGE	Woodward EHV 138kV	On Schedule for 2014
GEN-2008-037	101	WFEC	Tap Washita - Blue Canyon Wind 138kV	On-Line
GEN-2008-044	216	OKGE	Tatonga 345kV	On-Line
GEN-2008-046	200	OKGE	Sunnyside 345kV	On Suspension
GEN-2008-047	300	SPS	Tap Hitchland - Woodward Ckt 1 (Beaver County) 345kV	IA Pending
GEN-2008-051	322	SPS	Potter County 345kV	On Schedule for 2012
GEN-2008-071	76.8	OKGE	Newkirk 138kV	On Schedule for 2013
GEN-2008-079	100.5	SUNCMKEC	Tap Cudahy - Ft Dodge 115kV	On Schedule for 2012
GEN-2008-086N02	200	NPPD	Tap Ft Randle - Columbus (Madison County) 230kV	On Schedule for 2014
GEN-2008-088	50.6	SPS	Vega 69kV	IA Pending
GEN-2008-092	201	MIDW	Postrock 230kV	IA Pending
GEN-2008-098	100.8	WERE	Tap Lacygne - Wolf Creek (Anderson County) 345kV	IA Pending
GEN-2008-119O	60	OPPD	S1399 161kV	On-Line
GEN-2008-123N	89.7	NPPD	Tap Guide Rock - Pauline 115kV	On Suspension
GEN-2008-124	200	SUNCMKEC	Spearville 345kV	On Schedule for 2014
GEN-2008-127	200	WERE	Tap Rosehill - Sooner 345kV	On Suspension
GEN-2008-129	80	MIPU	Pleasant Hill 161kV	On-Line
GEN-2009-008	199.5	MIDW	South Hays 230kV	On Suspension
GEN-2009-011	50	SUNCMKEC	Tap Plainsville - Phillipsburg 115kV	On Schedule for 2014
GEN-2009-016	100.8	AEPW	Falcon Road 138kV	On Suspension
GEN-2009-020	48.6	MIDW	Tap Nekoma - Bazine 69kV	On Suspension
GEN-2009-025	60	OKGE	Tap Deer Creek - Sinclair Blackwell 69kV	On Schedule for 2012
GEN-2009-040	73.8	WERE	Tap Smittyville - Knob Hill 115kV	On Suspension
GEN-2009-067S	20	SPS	Seven Rivers 69kV	IA Pending
GEN-2010-001	300	SPS	Tap Hitchland - Woodward Ckt 1 (Beaver County) 345kV	IA Pending
GEN-2010-003	100.8	WERE	Tap Lacygne - Wolf Creek (Anderson County) 345kV	IA Pending
GEN-2010-005	300	WERE	Tap Wichita - Woodring (Sumner County) 345kV	On Schedule for 2012
GEN-2010-006	205	SPS	Jones 230kV	On-Line
GEN-2010-007	73.8	SPS	Tap Pringle - Riverview 115kV	IA Pending

Request	Amount	Area	Requested/Proposed Point of Interconnection	Status or In-Service Date
GEN-2010-008	64.4	WFEC	Woodward 69kV	IA Pending
GEN-2010-009	165.6	SUNCMKEC	Tap Holcomb - Spearville (Gray County) 345kV	On Schedule for 2012
GEN-2010-011	30	OKGE	Tatonga 345kV	On Line
GEN-2010-012	65	WFEC	Brantley 138kV	IA Pending
GEN-2010-014	360	SPS	Hitchland 345kV	IA Pending
GEN-2010-015	200.1	SUNCMKEC	Spearville 345kV	On Schedule for 2015
GEN-2010-020	20	SPS	Roswell 69kV	Facility Study
GEN-2010-029	450	SUNCMKEC	Spearville 345kV	Facility Study
GEN-2010-036	4.6	WERE	6th Street 115kV	On Schedule for 2012
GEN-2010-040	300	OKGE	Cimarron 345kV	On Schedule for 2012
GEN-2010-041	10.5	OPPD	S 1399 161kV	Under Study (DISIS-2010-002)
GEN-2010-043	320	WFEC	Mooreland 138kV	Under Study (DISIS-2010-002)
GEN-2010-045	197.8	SUNCMKEC	Tap Holcomb - Spearville (Gray County) 345kV	IA Pending
GEN-2010-046	56	SPS	Tuco 230kV	IA Pending
GEN-2010-048	70	MIDW	Tap Beach Station - Redline 115kV	IA Pending
GEN-2010-049	49.6	SUNCMKEC	Pratt 115kV	IA Pending
GEN-2010-051	200	NPPD	Tap Twin Church - Hoskins 230kV	IA Pending
GEN-2010-052	301.3	SPS	Finney 345kV	IA Pending
GEN-2010-053	199.8	SUNCMKEC	Clark County 345kV	IA Pending
GEN-2010-055	4.5	AEPW	Wekiwa 138kV	Under Study (DISIS-2011-001)
GEN-2010-056	151	MIPU	Tap Saint Joseph - Cooper 345kV	Under Study (DISIS-2011-001)
GEN-2010-057	201	WERE	Rice County 230kV	Under Study (DISIS-2011-001)
GEN-2010-058	20	SPS	Chaves County 115kV	Under Study (DISIS-2011-001)
GEN-2011-007	250	OKGE	Tap Cimarron - Woodring (Matthewson) 345kV	Under Study (DISIS-2011-001)
GEN-2011-008	600	SUNCMKEC	Clark County 345kV	Under Study (DISIS-2011-001)
GEN-2011-010	100.8	OKGE	Minco 345kV	Under Study (DISIS-2011-001)
GEN-2011-011	50	KACP	Iatan 345kV	Under Study (DISIS-2011-001)
GEN-2011-012	104.5	SPS	Tap Moore County - Hitchland 345kV	Under Study (DISIS-2011-001)
GEN-2011-014	201	SPS	Tap Hitchland - Woodward Ckt 1 (Beaver County) 345kV	Under Study (DISIS-2011-001)
GEN-2011-016	200.1	SUNCMKEC	Spearville 345kV	Under Study (DISIS-2011-001)
GEN-2011-017	299	SUNCMKEC	Tap Spearville - PostRock 345kV	Under Study (DISIS-2011-001)
GEN-2011-018	73.6	NPPD	Steele City 115kV	Under Study (DISIS-2011-001)
GEN-2011-019	299	OKGE	Woodward 345kV	Under Study (DISIS-2011-001)
GEN-2011-020	299	OKGE	Woodward 345kV	Under Study (DISIS-2011-001)
GEN-2011-021	299	SPS	Tap Hitchland - Beaver 345kV	Under Study (DISIS-2011-001)
GEN-2011-022	299	SPS	Hitchland 345kV	Under Study (DISIS-2011-001)
GEN-2011-023	299	SUNCMKEC	Tap Spearville - Clark 345kV	Under Study (DISIS-2011-001)
GEN-2011-024	299	OKGE	Tatonga 345kV	Under Study (DISIS-2011-001)
GEN-2011-025	82.3	SPS	Tap Floyd County - Crosby County 115kV	Under Study (DISIS-2011-001)
GEN-2011-027	120	NPPD	Tap Twin Church - Hoskins 230kV (GEN-2010-51 Tap)	Under Study (DISIS-2011-001)
Gray County Wind (Montezuma)	110	SUNCMKEC	Haggard 115kV	On-Line
Llano Estacado (White Deer)	80	SPS	Llano Wind 115kV	On-Line
NPPD Distributed (Broken Bow)	8.3	NPPD	Broken Bow 115kV	On-Line
NPPD Distributed (Burwell)	3	NPPD	Ord 115kV	On-Line
NPPD Distributed (Columbus Hydro)	45	NPPD	Columbus 115kV	On-Line
NPPD Distributed (Jeffrey)	18.0	NPPD	Jeffrey 115kV	On-Line
NPPD Distributed (John Lake 1)	19.0	NPPD	John Lake 1 115kV	On-Line

Request	Amount	Area	Requested/Proposed Point of Interconnection	Status or In-Service Date
NPPD Distributed (John Lake 2)	19.0	NPPD	John Lake 2 115kV	On-Line
NPPD Distributed (Ord)	10.8	NPPD	Ord 115kV	On-Line
NPPD Distributed (Stuart)	2.1	NPPD	Ainsworth 115kV	On-Line
SPS Distributed (Dumas 19th St)	20	SPS	Dumas 19th Street 115kV	On-Line
SPS Distributed (Etter)	20	SPS	Etter 115kV	On-Line
SPS Distributed (Moore E)	25	SPS	Moore East 115kV	On-Line
SPS Distributed (Sherman)	20	SPS	Sherman 115kV	On-Line
SPS Distributed (Spearman)	10	SPS	Spearman 69kV	On-Line
SPS Distributed (TC-Texas County)	20	SPS	Texas County 115kV	On-Line
TOTAL	**29,163.0**			

C: Study Groupings

See next page

C. Study Groups

GROUP 1: WOODWARD AREA			
Request	Capacity	Area	Proposed Point of Interconnection
GEN-2001-014	96.0	WFEC	Ft Supply 138kV
GEN-2001-037	100.0	OKGE	FPL Moreland Tap 138kV
GEN-2005-005	18.0	OKGE	FPL Moreland Tap 138kV
GEN-2005-008	120.0	OKGE	Woodward 138kV
GEN-2006-024S	19.8	WFEC	Buffalo Bear Tap 69kV
GEN-2006-046	131.0	OKGE	Dewey 138kV
GEN-2007-006	160.0	OKGE	Roman Nose 138kV
GEN-2007-021	201.0	OKGE	Tatonga 345kV
GEN-2007-043	200.0	OKGE	Minco 345kV
GEN-2007-044	300.0	OKGE	Tatonga 345kV
GEN-2007-050	170.0	OKGE	Woodward EHV 138kV
GEN-2007-051	200.0	WFEC	Mooreland 138kV
GEN-2007-062	765.0	OKGE	Woodward EHV 345kV
GEN-2008-003	101.0	OKGE	Woodward EHV 138kV
GEN-2008-019	300.0	OKGE	Tatonga 345kV
GEN-2008-029	250.0	OKGE	Woodward EHV 138kV
GEN-2008-044	216.0	OKGE	Tatonga 345kV
GEN-2010-008	64.4	WFEC	Woodward 69kV
GEN-2010-011	30.0	OKGE	Tatonga 345kV
GEN-2010-040	300.0	OKGE	Cimarron 345kV
GEN-2010-043	320.0	WFEC	Mooreland 138kV
GEN-2011-007	250.0	OKGE	Tap Cimarron - Woodring (Matthewson) 345kV
GEN-2011-010	100.8	OKGE	Minco 345kV
GEN-2011-019	299.0	OKGE	Woodward 345kV
GEN-2011-020	299.0	OKGE	Woodward 345kV
GEN-2011-024	299.0	OKGE	Tatonga 345kV
PRIOR QUEUED SUBTOTAL	5,310.0		
GEN-2011-051	104.4	OKGE	Tap Woodward - Tatonga 345kV
GEN-2011-054	300.0	OKGE	Cimarron 345kV
CURRENT CLUSTER SUBTOTAL	404.4		
AREA TOTAL	5,714.4		

GROUP 2: HITCHLAND AREA

Request	Capacity	Area	Proposed Point of Interconnection
ASGI-2010-011	48.0	SPS	TC-Texas County 69kV
GEN-2002-008	240.0	SPS	Hitchland 345kV
GEN-2002-009	80.0	SPS	Hansford 115kV
GEN-2003-020	160.0	SPS	Martin 115kV
GEN-2005-017	340.0	SPS	Tap Hitchland - Potter 345kV
GEN-2006-020S	18.9	SPS	DWS Frisco 115kV
GEN-2006-044	370.0	SPS	Hitchland 345kV
GEN-2006-049	400.0	SPS	Tap Finney - Hitchland (Stevens County) 345kV
GEN-2007-046	199.5	SPS	Hitchland 115kV
GEN-2007-057	34.5	SPS	Moore County East 115kV
GEN-2008-047	300.0	SPS	Tap Hitchland - Woodward Ckt 1 (Beaver County) 345kV
GEN-2010-001	300.0	SPS	Tap Hitchland - Woodward Ckt 1 (Beaver County) 345kV
GEN-2010-007	73.8	SPS	Tap Pringle - Riverview 115kV
GEN-2010-014	360.0	SPS	Hitchland 345kV
GEN-2011-012	104.5	SPS	Tap Moore County - Hitchland 345kV
GEN-2011-014	201.0	SPS	Tap Hitchland - Woodward Ckt 1 (Beaver County) 345kV
GEN-2011-021	299.0	SPS	Tap Hitchland - Beaver 345kV
GEN-2011-022	299.0	SPS	Hitchland 345kV
SPS Distributed (Dumas 19th St)	20.0	SPS	Dumas 19th Street 115kV
SPS Distributed (Etter)	20.0	SPS	Etter 115kV
SPS Distributed (Moore E)	25.0	SPS	Moore East 115kV
SPS Distributed (Sherman)	20.0	SPS	Sherman 115kV
SPS Distributed (Spearman)	10.0	SPS	Spearman 69kV
SPS Distributed (TC-Texas County)	20.0	SPS	Texas County 115kV
PRIOR QUEUED SUBTOTAL	**3,943.2**		
AREA TOTAL	**3,943.2**		

GROUP 3: SPEARVILLE AREA

Request	Capacity	Area	Proposed Point of Interconnection
GEN-2001-039A	105.0	SUNCMKEC	Tap Greensburg - Ft Dodge 115kV
GEN-2002-025A	150.0	SUNCMKEC	Spearville 230kV
GEN-2004-014	154.5	SUNCMKEC	Spearville 230kV
GEN-2005-012	250.0	SUNCMKEC	Spearville 345kV
GEN-2006-006	205.5	SUNCMKEC	Spearville 345kV
GEN-2006-021	101.0	SUNCMKEC	Flat Ridge Tap 138kV
GEN-2006-022	150.0	SUNCMKEC	Pratt 115kV
GEN-2007-038	200.0	SUNCMKEC	Spearville 345kV
GEN-2007-040	200.0	SUNCMKEC	Tap Holcomb - Spearville (Gray County) 345kV
GEN-2008-018	405.0	SPS	Finney 345kV
GEN-2008-079	100.5	SUNCMKEC	Tap Cudahy - Ft Dodge 115kV
GEN-2008-124	200.0	SUNCMKEC	Spearville 345kV
GEN-2010-009	165.6	SUNCMKEC	Tap Holcomb - Spearville (Gray County) 345kV
GEN-2010-015	200.1	SUNCMKEC	Spearville 345kV
GEN-2010-029	450.0	SUNCMKEC	Spearville 345kV
GEN-2010-045	197.8	SUNCMKEC	Tap Holcomb - Spearville (Gray County) 345kV
GEN-2010-049	49.6	SUNCMKEC	Pratt 115kV
GEN-2010-052	301.3	SPS	Finney 345kV
GEN-2010-053	199.8	SUNCMKEC	Clark County 345kV
GEN-2011-008	600.0	SUNCMKEC	Clark County 345kV
GEN-2011-016	200.1	SUNCMKEC	Spearville 345kV
GEN-2011-017	299.0	SUNCMKEC	Tap Spearville - PostRock 345kV
GEN-2011-023	299.0	SUNCMKEC	Tap Spearville - Clark 345kV
Gray County Wind (Montezuma)	110.0	SUNCMKEC	Haggard 115kV
PRIOR QUEUED SUBTOTAL	**5,293.8**		
GEN-2010-061	180.0	MIDW	Tap Post Rock - Spearville 345kV
GEN-2011-043	150.0	SUNCMKEC	Thistle 345kV
GEN-2011-044	150.0	SUNCMKEC	Thistle 345kV
CURRENT CLUSTER SUBTOTAL	**480.0**		
AREA TOTAL	**5,773.8**		

GROUP 4: MINGO/NW KANSAS AREA

Request	Capacity	Area	Proposed Point of Interconnection
GEN-2001-039M	100.0	SUNCMKEC	Central Plains Tap 115kV
GEN-2006-034	81.0	SUNCMKEC	Kanarado 115kV
GEN-2006-040	108.0	SUNCMKEC	Mingo 115kV
GEN-2007-011	135.0	SUNCMKEC	Syracuse 115kV
GEN-2007-013	99.0	SUNCMKEC	Selkirk 115kV
GEN-2008-017	300.0	SUNCMKEC	Setab 345kV
GEN-2008-025	101.0	SUNCMKEC	Ruleton 115kV
PRIOR QUEUED SUBTOTAL	**924.0**		
AREA TOTAL	**924.0**		

GROUP 5: AMARILLO AREA

Request	Capacity	Area	Proposed Point of Interconnection
GEN-2002-022	240.0	SPS	Bushland 230kV
GEN-2006-039	400.0	SPS	Tap and Tie both Potter - Plant X 230kV and Bushland - Deaf Smith (South Randle County) 230kV
GEN-2006-045	240.0	SPS	Tap and Tie both Potter - Plant X 230kV and Bushland - Deaf Smith (South Randle County) 230kV
GEN-2006-047	240.0	SPS	Tap and Tie both Potter - Plant X 230kV and Bushland - Deaf Smith (South Randle County) 230kV
GEN-2007-002	160.0	SPS	Grapevine 115kV
GEN-2007-048	400.0	SPS	Tap Amarillo S - Swisher 230kV
GEN-2008-051	322.0	SPS	Potter County 345kV
GEN-2008-088	50.6	SPS	Vega 69kV
Llano Estacado (White Deer)	80.0	SPS	Llano Wind 115kV
PRIOR QUEUED SUBTOTAL	**2,132.6**		
AREA TOTAL	**2,132.6**		

GROUP 6: S-TX PANHANDLE/NW AREA

Request	Capacity	Area	Proposed Point of Interconnection
ASGI-2010-010	42.0	SPS	Lovington 115kV
ASGI-2010-020	50.0	SPS	Tap LE-Tatum - LE-Crossroads 69kV
ASGI-2010-021	36.6	SPS	Tap LE-Saunders Tap - LE-Anderson 69kV
ASGI-2011-001	28.8	SPS	Lovington 115kV
ASGI-2011-002	10.0	SPS	Herring 115kV
ASGI-2011-003	10.0	SPS	Hendricks 115kV
GEN-2001-033	180.0	SPS	San Juan Tap 230kV
GEN-2001-036	80.0	SPS	Norton 115kV
GEN-2006-018	170.0	SPS	Antelope 230kV
GEN-2006-026	502.0	SPS	Hobbs 230kV
GEN-2008-008	60.0	SPS	Graham 69kV
GEN-2008-009	60.0	SPS	San Juan Tap 230kV
GEN-2008-014	150.0	SPS	Tap Tuco- Oklaunion 345kV
GEN-2008-016	248.0	SPS	Grassland 230kV
GEN-2008-022	300.0	SPS	Tap Eddy Co - Tolk (Chaves County) 345kV
GEN-2009-067S	20.0	SPS	Seven Rivers 69kV
GEN-2010-006	205.0	SPS	Jones 230kV
GEN-2010-020	20.0	SPS	Roswell 69kV
GEN-2010-046	56.0	SPS	Tuco 230kV
GEN-2010-058	20.0	SPS	Chaves County 115kV
GEN-2011-025	82.3	SPS	Tap Floyd County - Crosby County 115kV
PRIOR QUEUED SUBTOTAL	**2,330.7**		
ASGI-2011-004	20.0	SPS	Pleasant Hill 69kV
GEN-2011-045	205.0	SPS	Jones 230kV
GEN-2011-046	27.0	SPS	Tucumcari 115kV
GEN-2011-048	165.0	SPS	Mustang 230kV
GEN-2011-058	200.0	SPS	Tap Grassland - Borden 230kV
CURRENT CLUSTER SUBTOTAL	**617.0**		
AREA TOTAL	**2,947.7**		

GROUP 7: SW OKLAHOMA AREA

Request	Capacity	Area	Proposed Point of Interconnection
GEN-2001-026	74.0	WFEC	Washita 138kV
GEN-2002-005	120.0	WFEC	Red Hills Tap 138kV
GEN-2003-004 GEN-2004-023 GEN-2005-003	151.2	WFEC	Washita 138kV
GEN-2003-005	100.0	WFEC	Anadarko - Paradise (Blue Canyon) 138kV
GEN-2003-022	120.0	AEPW	Washita 34.5kV
GEN-2004-020	27.0	AEPW	Washita 34.5kV
GEN-2006-002	101.0	AEPW	Sweetwater 230kV
GEN-2006-035	225.0	AEPW	Sweetwater 230kV
GEN-2006-043	99.0	AEPW	Sweetwater 230kV
GEN-2007-032	150.0	WFEC	Tap Clinton Junction - Clinton 138kV
GEN-2007-052	150.0	WFEC	Anadarko 138kV
GEN-2008-023	150.0	AEPW	Hobart Junction 138kV
GEN-2008-037	101.0	WFEC	Tap Washita - Blue Canyon Wind 138kV
GEN-2009-016	100.8	AEPW	Falcon Road 138kV
GEN-2010-012	65.0	WFEC	Brantley 138kV
PRIOR QUEUED SUBTOTAL	**1,734.0**		
GEN-2011-037	7.0	WFEC	Blue Canyon 5 138kV
GEN-2011-049	250.0	OKGE	Border 345kV
CURRENT CLUSTER SUBTOTAL	**257.0**		
AREA TOTAL	**1,991.0**		

GROUP 8: N-OK/S-KS AREA

Request	Capacity	Area	Proposed Point of Interconnection
ASGI-2010-006	150.0	AECI	Tap Fairfax Tap - Fairfax (AECI) 138kV
ASGI-2010-007	150.0	AECI	Tap Fairfax Tap - Fairfax (AECI) 138kV
GEN-2002-004	200.0	WERE	Latham 345kV
GEN-2005-013	201.0	WERE	Tap Latham - Neosho (Caney River) 345kV
GEN-2007-025	300.0	WERE	Tap Wichita - Woodring (Sumner County) 345kV
GEN-2008-013	300.0	OKGE	Tap Wichita - Woodring (South of GEN-2007-025) 345kV
GEN-2008-021	42.0	WERE	Wolf Creek 345kV
GEN-2008-071	76.8	OKGE	Newkirk 138kV
GEN-2008-098	100.8	WERE	Tap Lacygne - Wolf Creek (Anderson County) 345kV
GEN-2008-127	200.0	WERE	Tap Rosehill - Sooner 345kV
GEN-2009-025	60.0	OKGE	Tap Deer Creek - Sinclair Blackwell 69kV
GEN-2010-003	100.8	WERE	Tap Lacygne - Wolf Creek (Anderson County) 345kV
GEN-2010-005	300.0	WERE	Tap Wichita - Woodring (Sumner County) 345kV
GEN-2010-055	4.5	AEPW	Wekiwa 138kV
PRIOR QUEUED SUBTOTAL	**2,185.9**		
GEN-2011-041	150.0	WERE	Tap Wichita - Woodring (Sumner County) 345kV
GEN-2011-042	150.0	WERE	Tap Wichita - Woodring (Sumner County) 345kV
GEN-2011-057	150.4	WERE	Creswell 138kV
CURRENT CLUSTER SUBTOTAL	**450.4**		
AREA TOTAL	**2,636.3**		

GROUP 9/10: NEBRASKA AREA

Request	Capacity	Area	Proposed Point of Interconnection
GEN-2002-023N	0.8	NPPD	Harmony 115kV
GEN-2003-021N	75.0	NPPD	Ainsworth Wind Tap 115kV
GEN-2004-005N	30.0	NPPD	St Francis 115kV
GEN-2004-023N	75.0	NPPD	Columbus County 115kV
GEN-2006-020N	42.0	NPPD	Bloomfield 115kV
GEN-2006-037N1	75.0	NPPD	Broken Bow 115kV
GEN-2006-038N005	80.0	NPPD	Broken Bow 115kV
GEN-2006-038N019	80.0	NPPD	Petersburg 115kV
GEN-2006-044N	40.5	NPPD	Petersburg 115kV
GEN-2006-044N02	100.5	NPPD	Tap Ft Randle - Columbus (Madison County) 230kV
GEN-2007-011N08	81.0	NPPD	Bloomfield 115kV
GEN-2007-015	135.0	WERE	Tap Kelly(WERE) - S1399(OPPD) 161kV
GEN-2008-086N02	200.0	NPPD	Tap Ft Randle - Columbus (Madison County) 230kV
GEN-2008-119O	60.0	OPPD	S1399 161kV
GEN-2008-123N	89.7	NPPD	Tap Guide Rock - Pauline 115kV
GEN-2009-040	73.8	WERE	Tap Smittyville - Knob Hill 115kV
GEN-2010-041	10.5	OPPD	S 1399 161kV
GEN-2010-051	200.0	NPPD	Tap Twin Church - Hoskins 230kV
GEN-2011-018	73.6	NPPD	Steele City 115kV
GEN-2011-027	120.0	NPPD	Tap Twin Church - Hoskins 230kV (GEN-2010-51 Tap)
NPPD Distributed (Broken Bow)	8.3	NPPD	Broken Bow 115kV
NPPD Distributed (Burwell)	3.0	NPPD	Ord 115kV
NPPD Distributed (Columbus Hydro)	45.0	NPPD	Columbus 115kV
NPPD Distributed (Jeffrey)	18.0	NPPD	Jeffrey 115kV,
NPPD Distributed (John Lake 1)	19.0	NPPD	John Lake 1 115kV
NPPD Distributed (John Lake 2)	19.0	NPPD	John Lake 2 115kV
NPPD Distributed (Ord)	10.8	NPPD	Ord 115kV
NPPD Distributed (Stuart)	2.1	NPPD	Ainsworth 115kV
PRIOR QUEUED SUBTOTAL	**1,767.6**		
GEN-2010-044	99.0	NPPD	Harbine 115kV
GEN-2011-055	50.0	OPPD	South Sterling 69kV
GEN-2011-056	4.5	NPPD	John Lake 2 115kV
GEN-2011-056	3.6	NPPD	John Lake 1 115kV
GEN-2011-056	3.6	NPPD	Jeffrey 115kV
CURRENT CLUSTER SUBTOTAL	**160.7**		
AREA TOTAL	**1,928.3**		

GROUP 11: N KANSAS AREA

Request	Capacity	Area	Proposed Point of Interconnection
GEN-2003-006A	200.0	SUNCMKEC	Elm Creek 230kV
GEN-2003-019	250.0	MIDW	Smoky Hills Tap 230kV
GEN-2006-031	75.0	MIDW	Knoll 115kV
GEN-2006-032	200.0	MIDW	South Hays 230kV
GEN-2008-092	201.0	MIDW	Postrock 230kV
GEN-2009-008	199.5	MIDW	South Hays 230kV
GEN-2009-011	50.0	SUNCMKEC	Tap Plainsville - Phillipsburg 115kV
GEN-2009-020	48.6	MIDW	Tap Nekoma - Bazine 69kV
GEN-2010-048	70.0	MIDW	Tap Beach Station - Redline 115kV
GEN-2010-057	201.0	WERE	Rice County 230kV
PRIOR QUEUED SUBTOTAL	**1,495.1**		
AREA TOTAL	**1,495.1**		

GROUP 12: NW AR AREA

Request	Capacity	Area	Proposed Point of Interconnection
AREA TOTAL	**0.0**		

GROUP 13: NW MISSOURI AREA

Request	Capacity	Area	Proposed Point of Interconnection
ASGI-2010-001	400.0	AECI	Tap Cooper - Fairport (AECI) 345kV
ASGI-2010-004	50.0	AECI	Tap Queen City (AECI) - Lancaster (AECI) 69kV
ASGI-2010-005	99.0	AECI	Lathrop (AECI) 161kV
ASGI-2010-009	201.0	AECI	Osborn (AECI) 161kV
GEN-2006-014	300.0	MIPU	Tap Maryville - Midway 161kV
GEN-2006-017	300.0	MIPU	Tap Maryville - Midway 161kV (GEN-2006-014 TAP)
GEN-2007-017	100.5	MIPU	Tap Maryville - Midway (GEN-2006-014 TAP) 161kV
GEN-2007-053	110.0	MIPU	Tap Maryville - Midway (GEN-2006-014 TAP) 161kV
GEN-2008-129	80.0	MIPU	Pleasant Hill 161kV
GEN-2010-036	4.6	WERE	6th Street 115kV
GEN-2010-056	151.0	MIPU	Tap Saint Joseph - Cooper 345kV
GEN-2011-011	50.0	KACP	Iatan 345kV
PRIOR QUEUED SUBTOTAL	**1,846.1**		
AREA TOTAL	**1,846.1**		

GROUP 14: S OKLAHOMA AREA

Request	Capacity	Area	Proposed Point of Interconnection
GEN-2008-046	200.0	OKGE	Sunnyside 345kV
PRIOR QUEUED SUBTOTAL	200.0		
GEN-2011-040	111.0	OKGE	Tap Ratliff - Pooleville 138kV
GEN-2011-050	109.8	AEPW	Tap Rush Springs - Marlow 138kV
CURRENT CLUSTER SUBTOTAL	220.8		
AREA TOTAL	420.8		

GROUP 15: RESERVED

Request	Capacity	Area	Proposed Point of Interconnection
AREA TOTAL	0.0		

CLUSTER TOTAL (CURRENT STUDY)	2,590.3	MW
PQ TOTAL (PRIOR QUEUED)	29,163.0	MW
CLUSTER TOTAL (INCLUDING PRIOR QUEUED)	31,753.3	MW

D: Proposed Point of Interconnection One line Diagrams

ASGI-2011-004

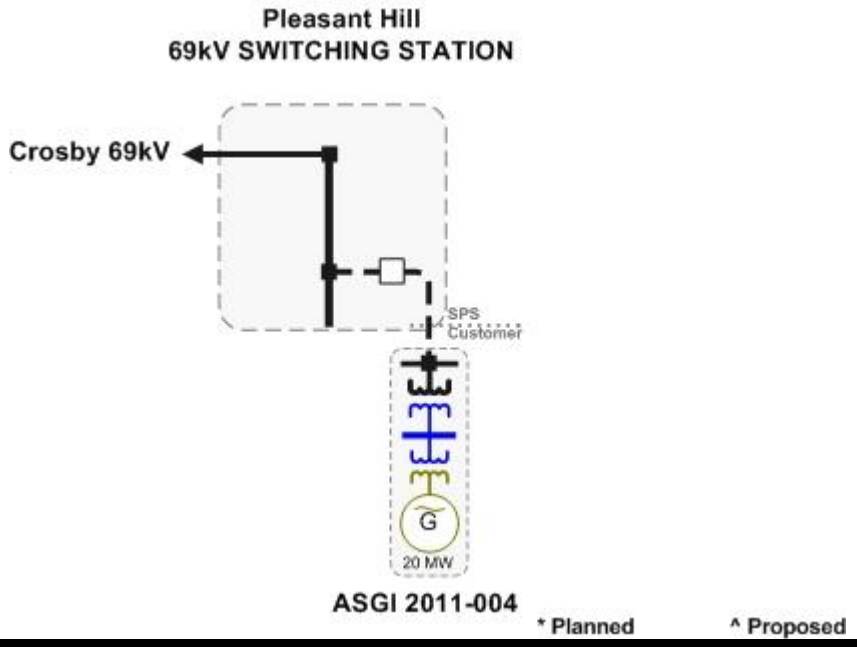

GEN-2010-044

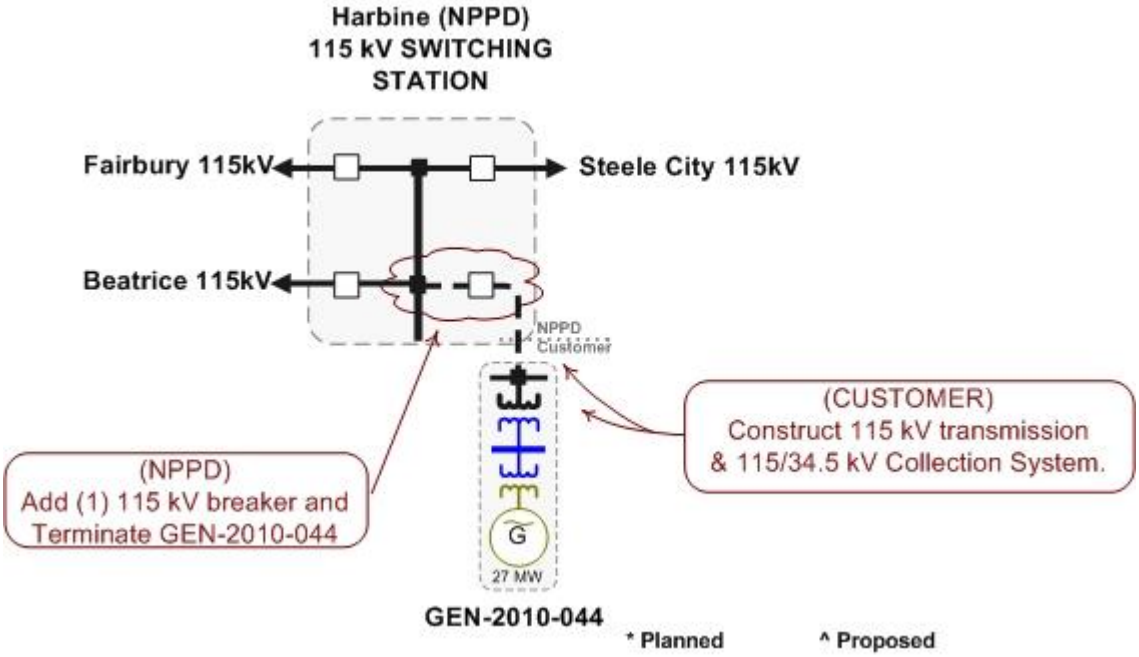

GEN-2010-061

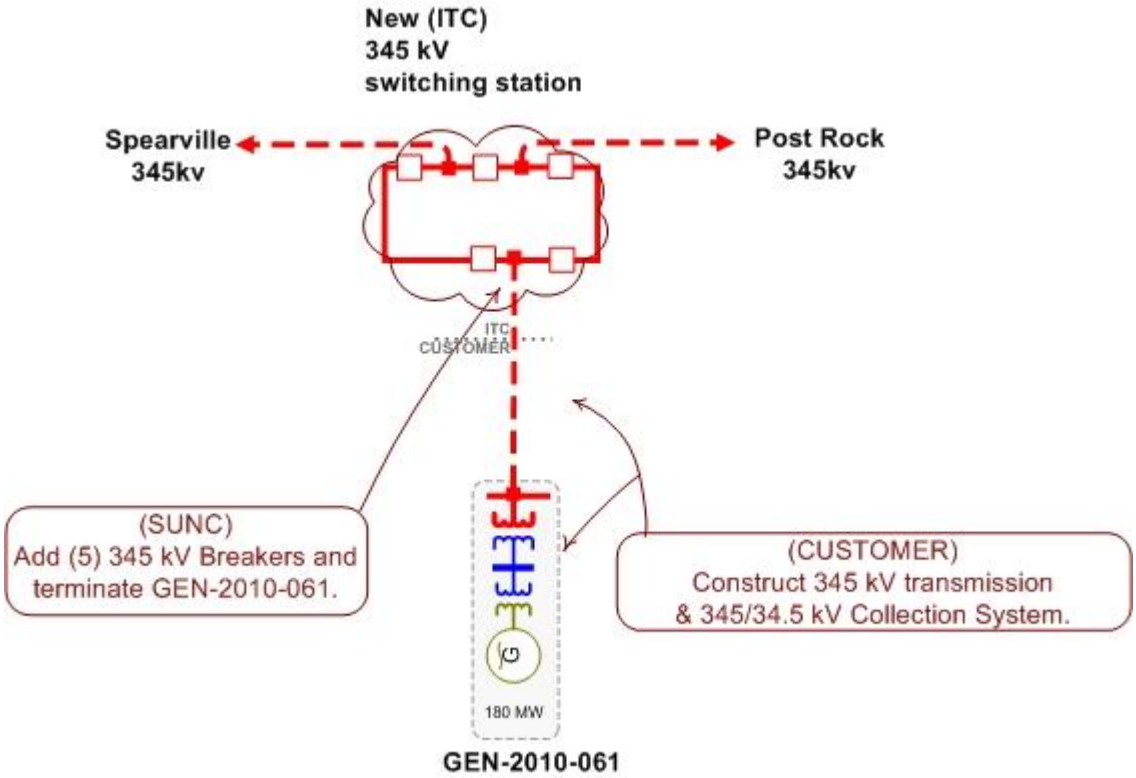

GEN-2011-037

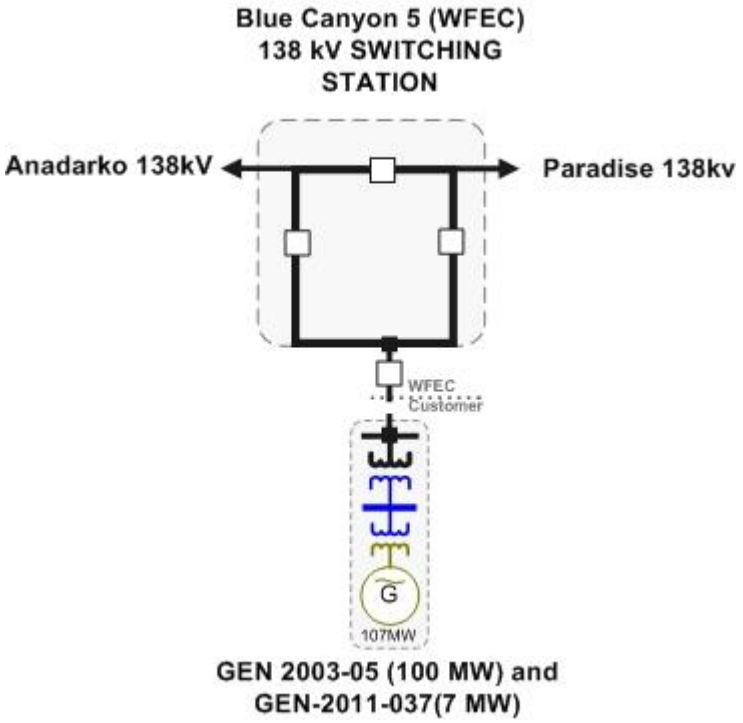

GEN-2011-040

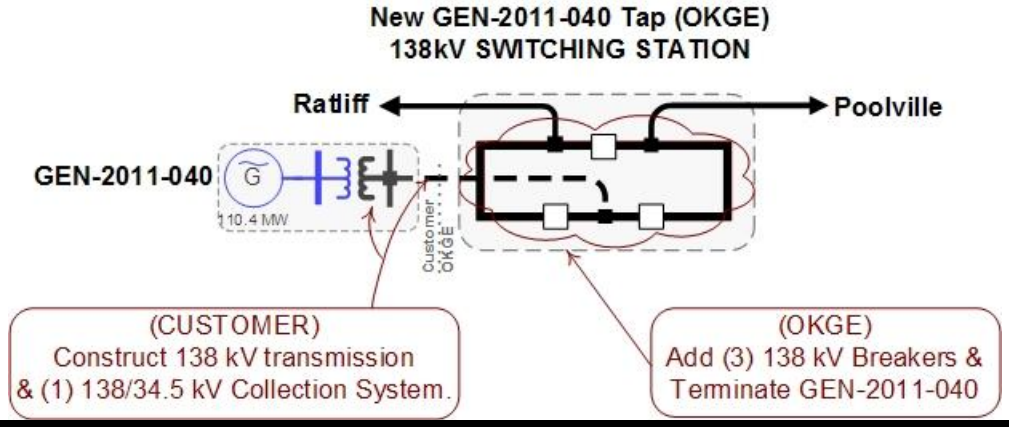

GEN-2011-041

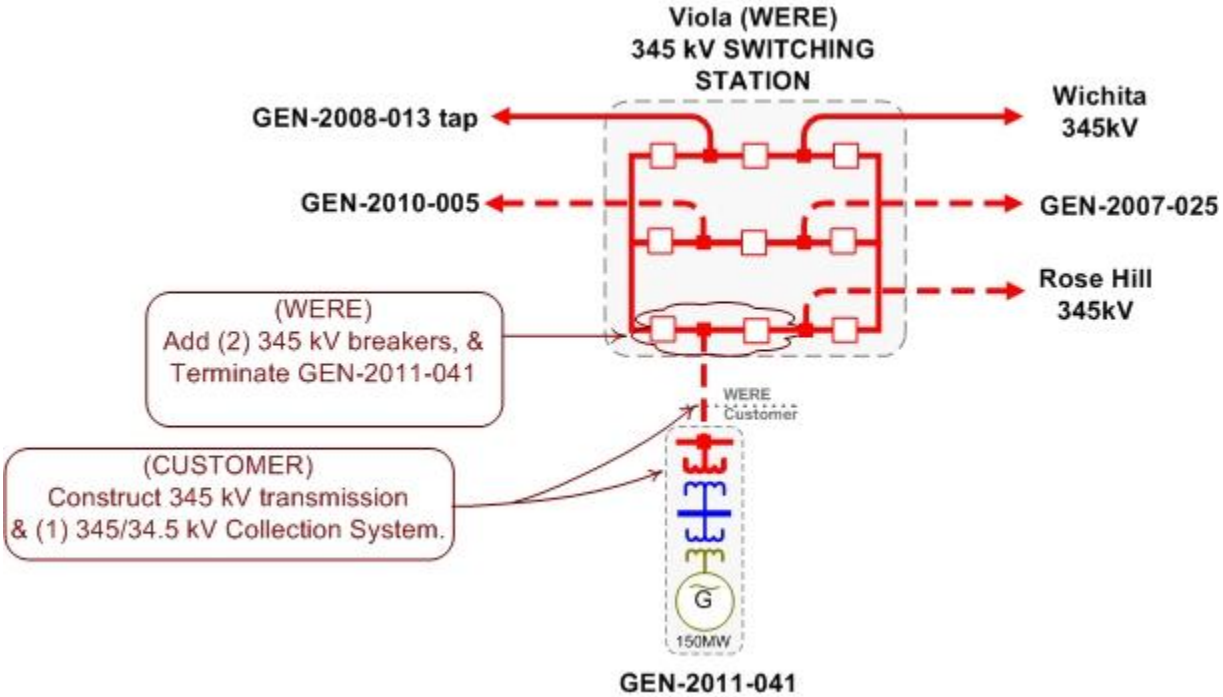

GEN-2011-042

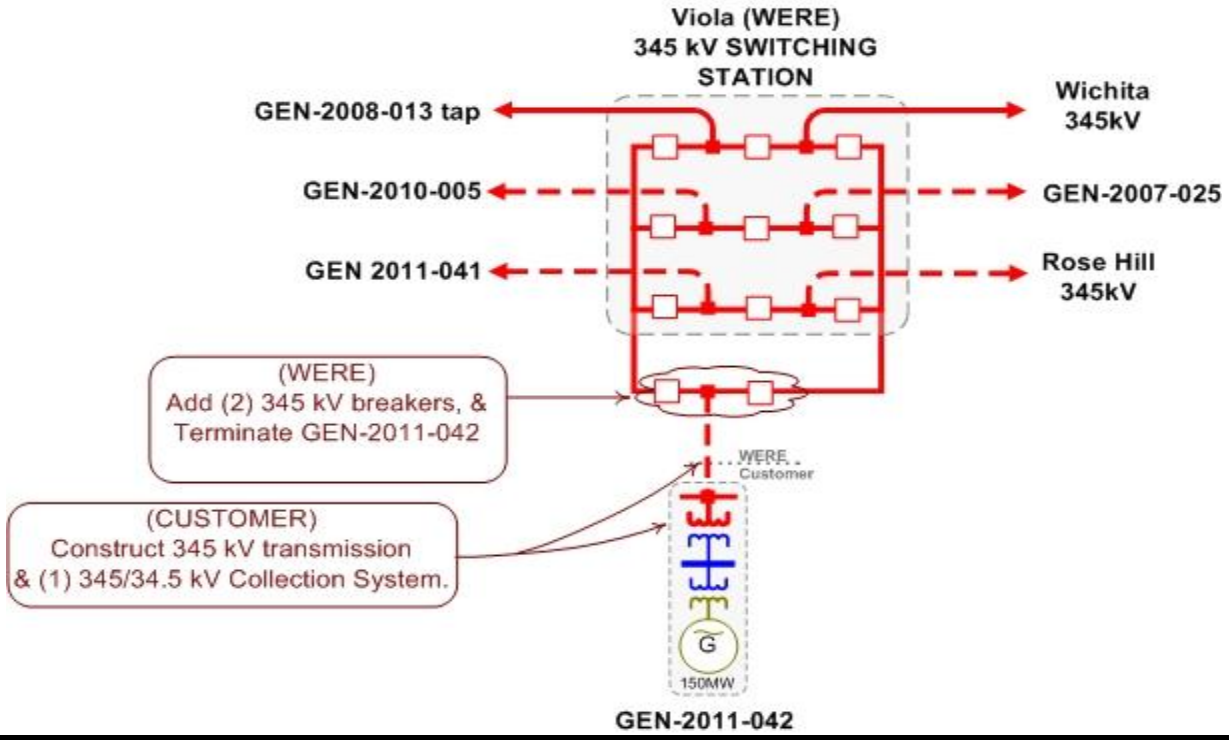

GEN-2011-043

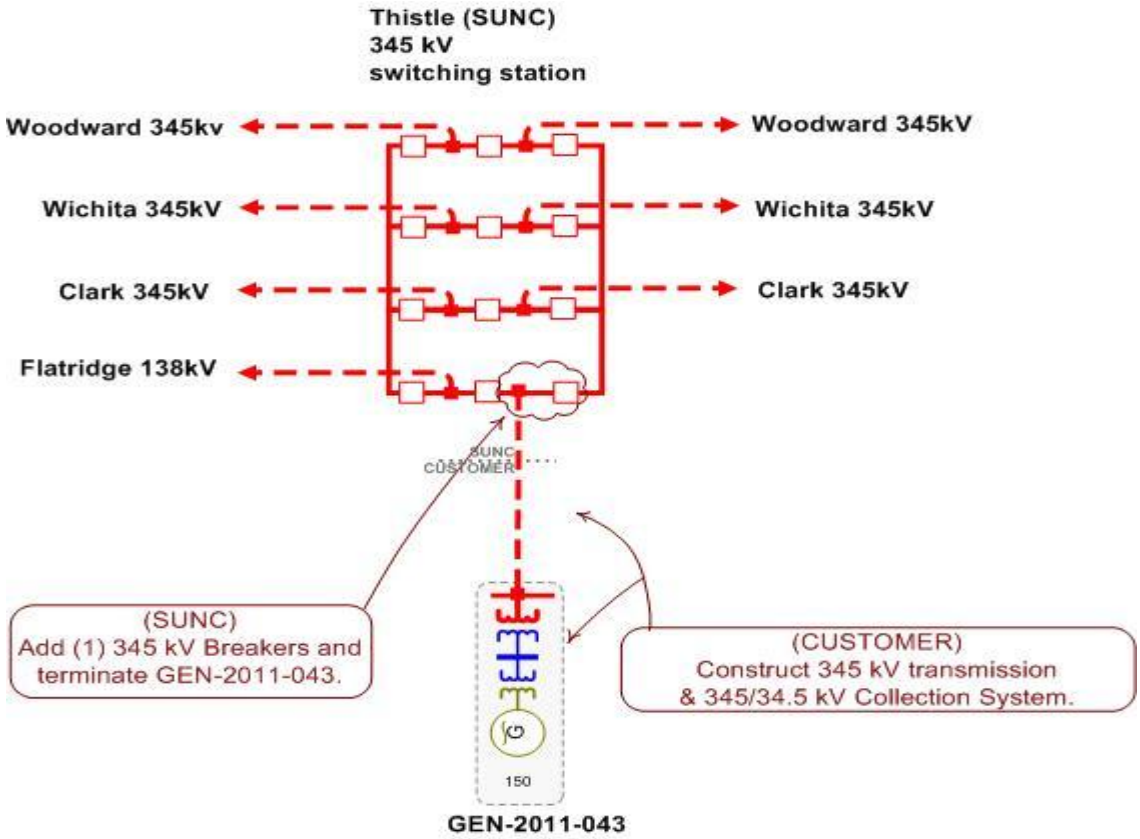

GEN-2011-044

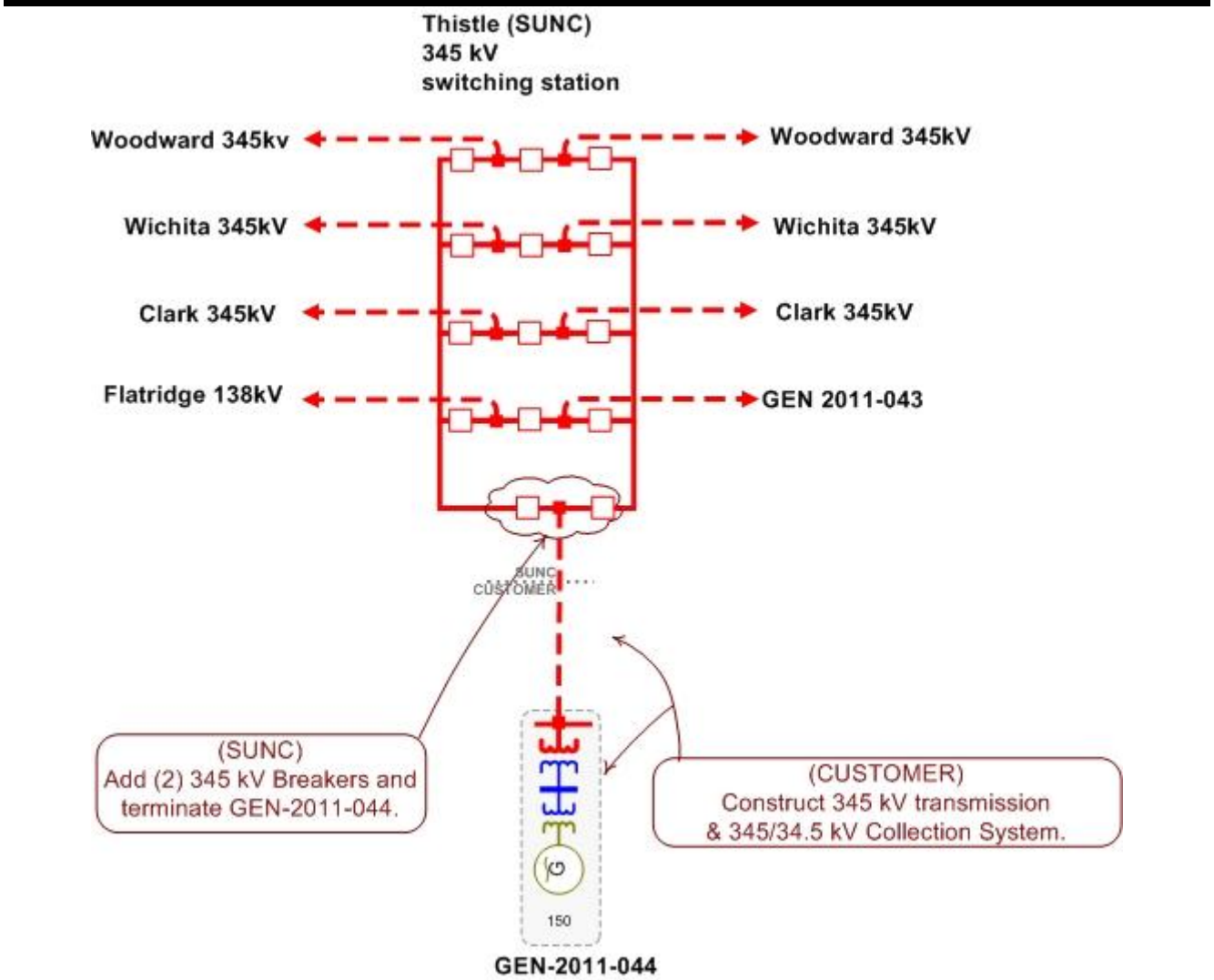

GEN-2011-045

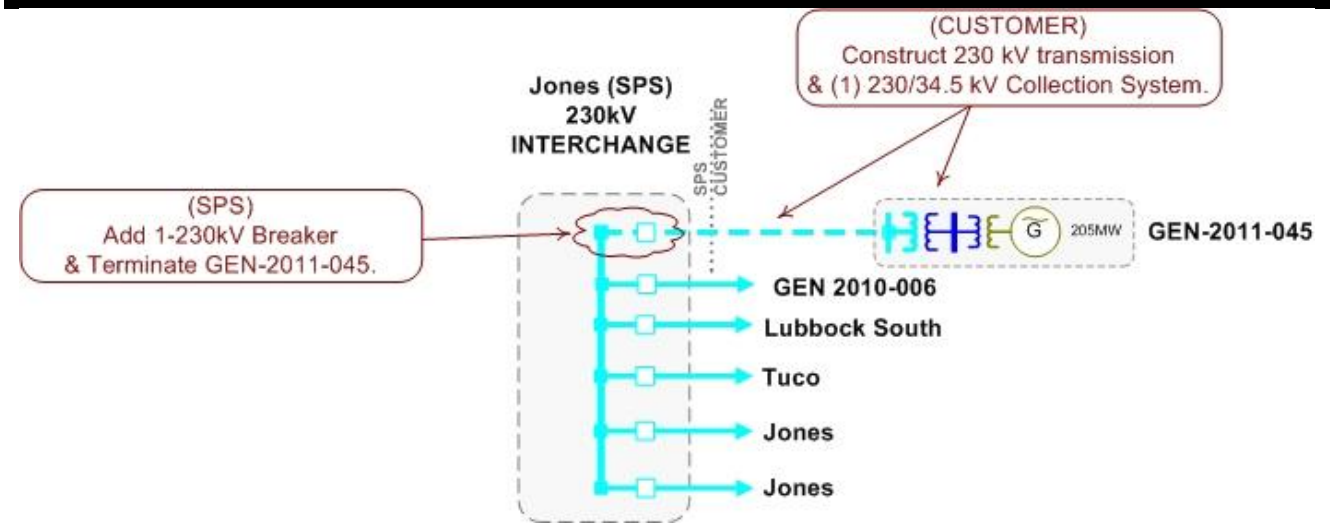

GEN-2011-046

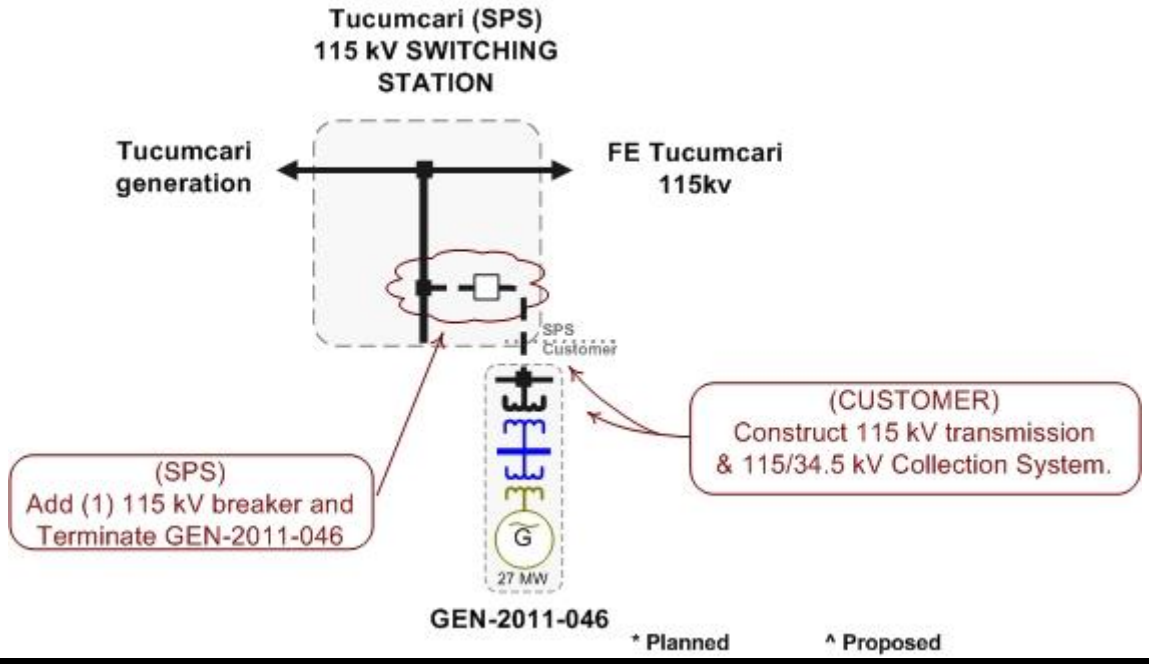

GEN-2011-048

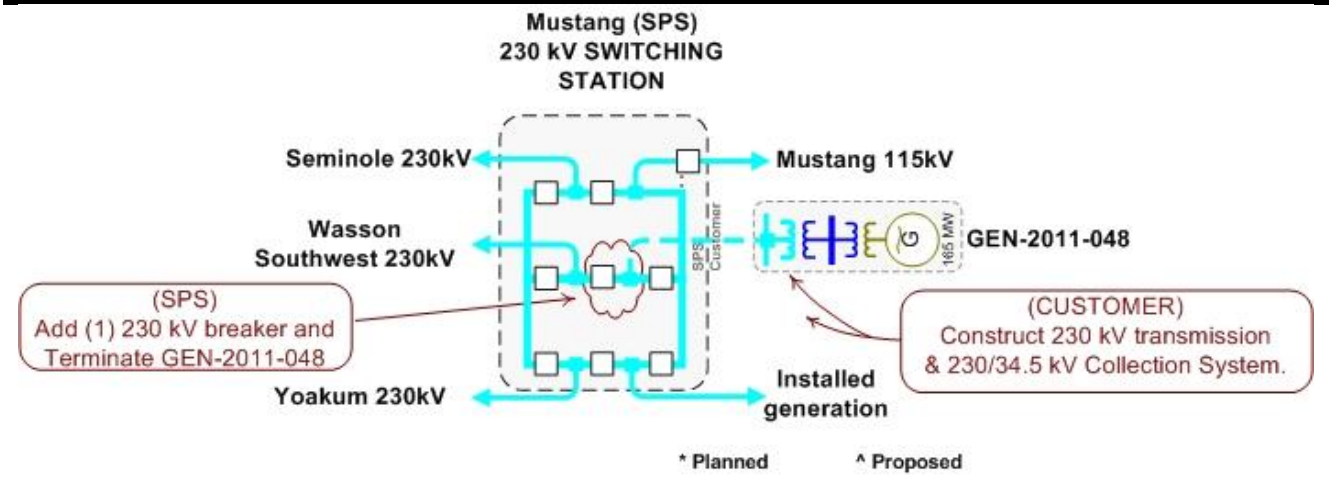

GEN-2011-049

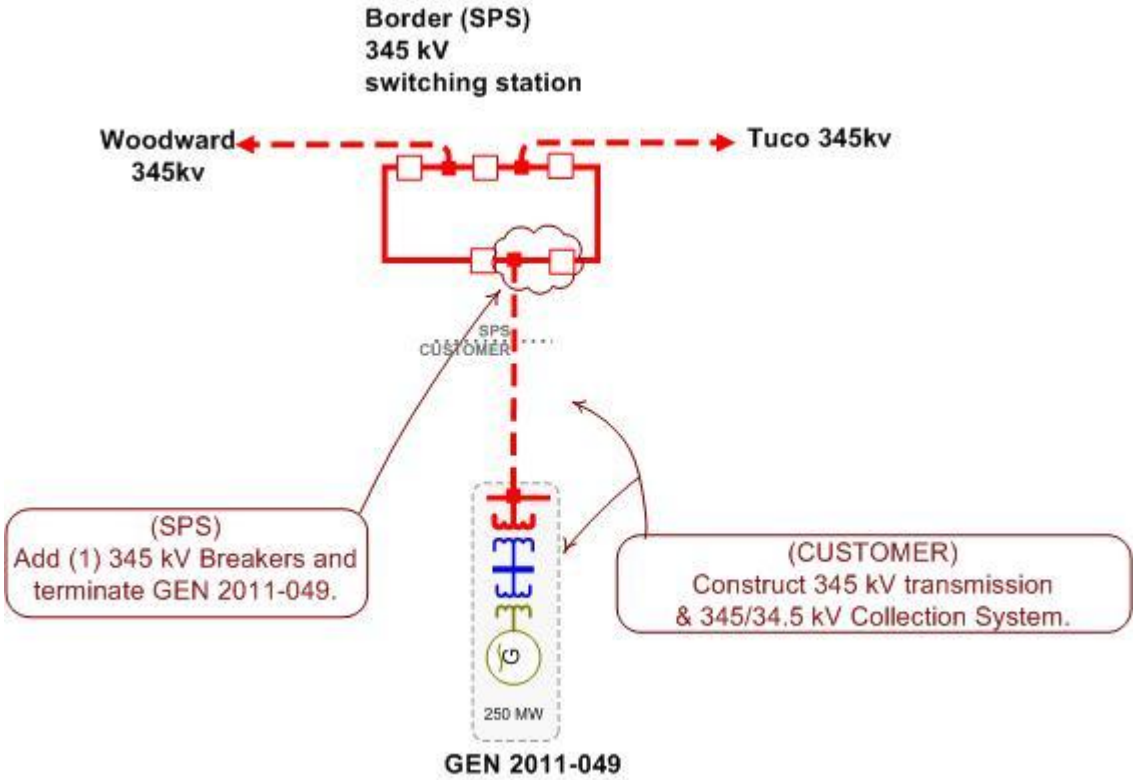

GEN-2011-050

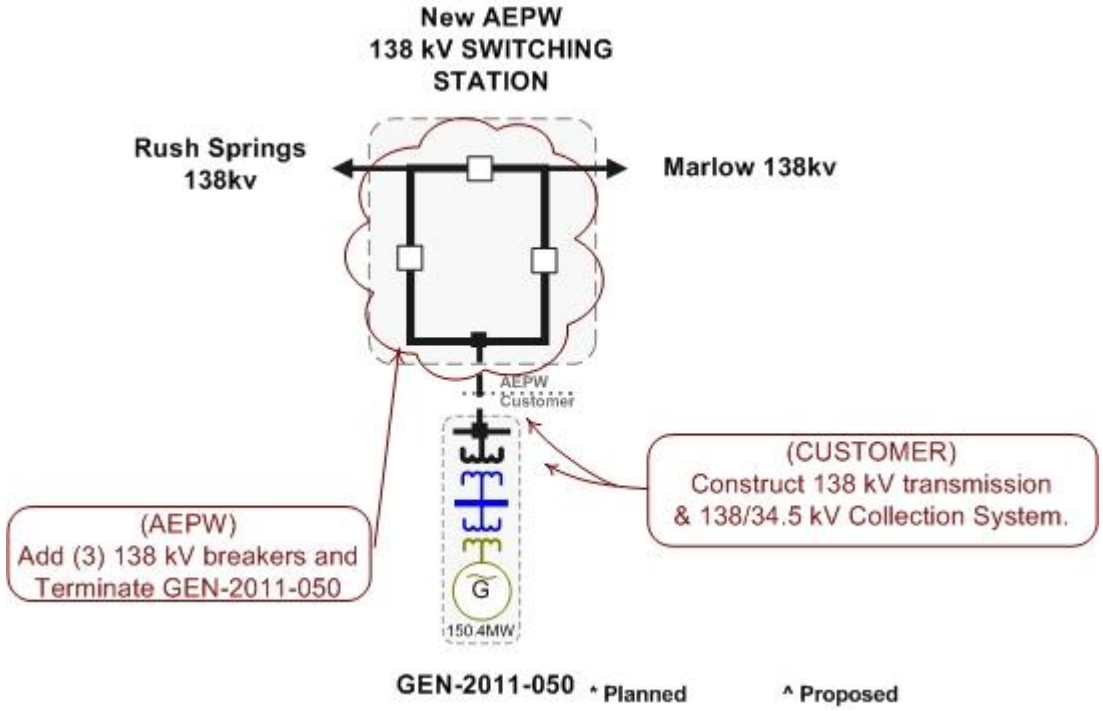

GEN-2011-051

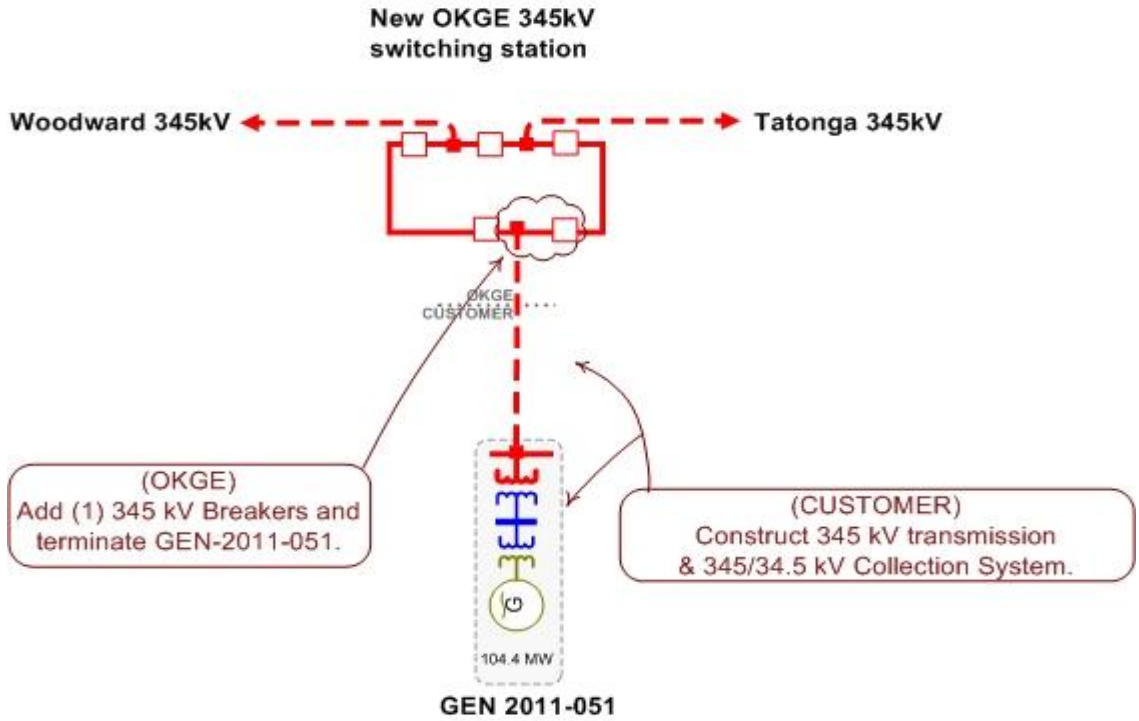

GEN-2011-054

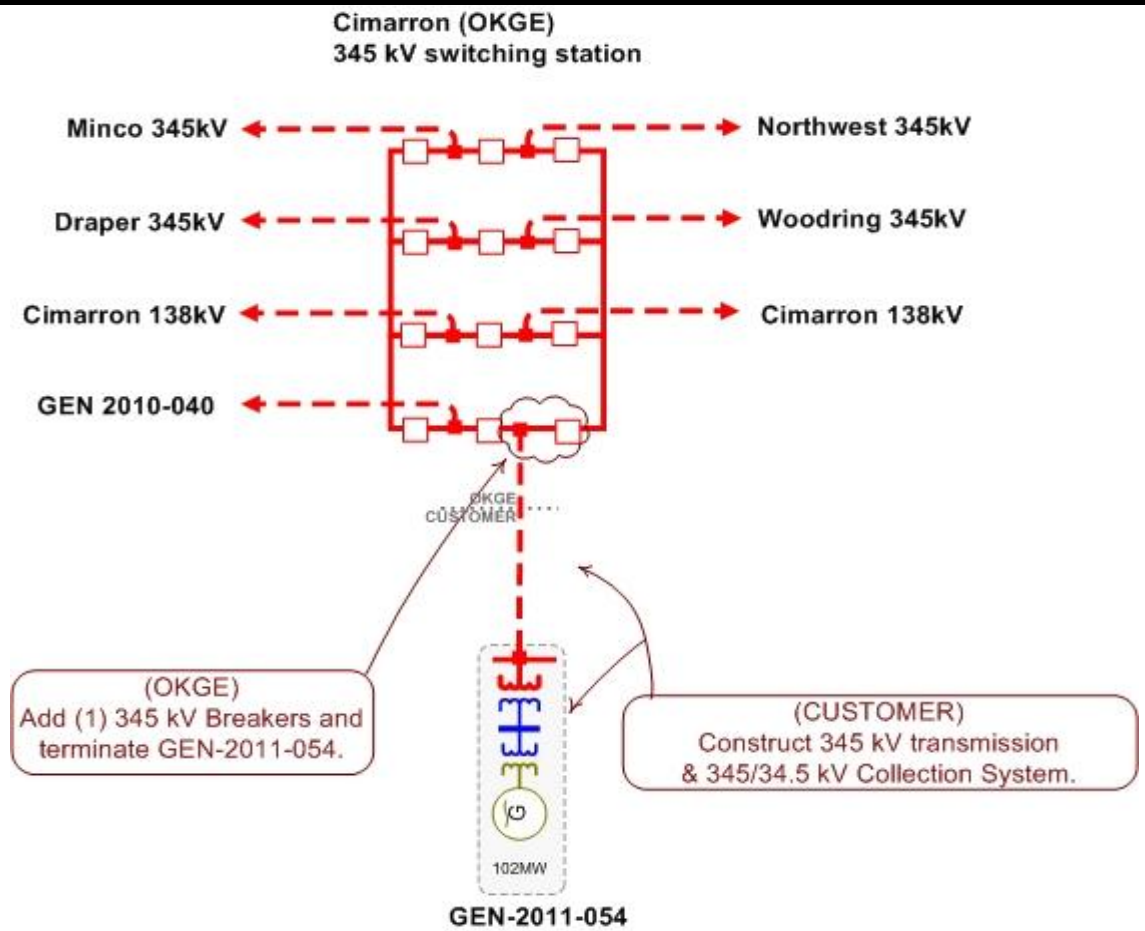

GEN-2011-055

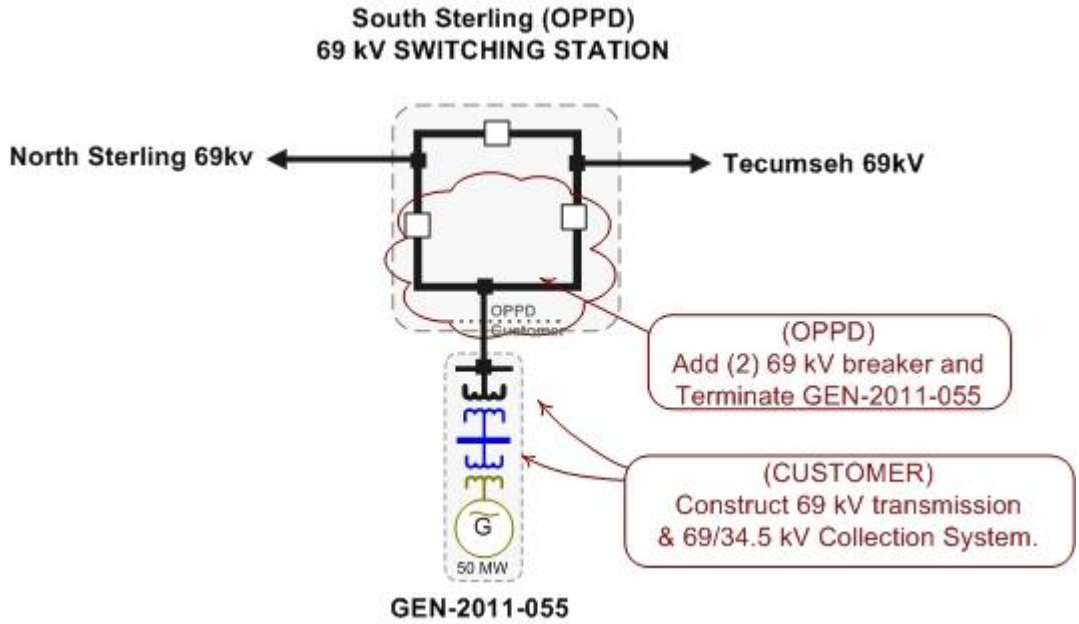

GEN-2011-056

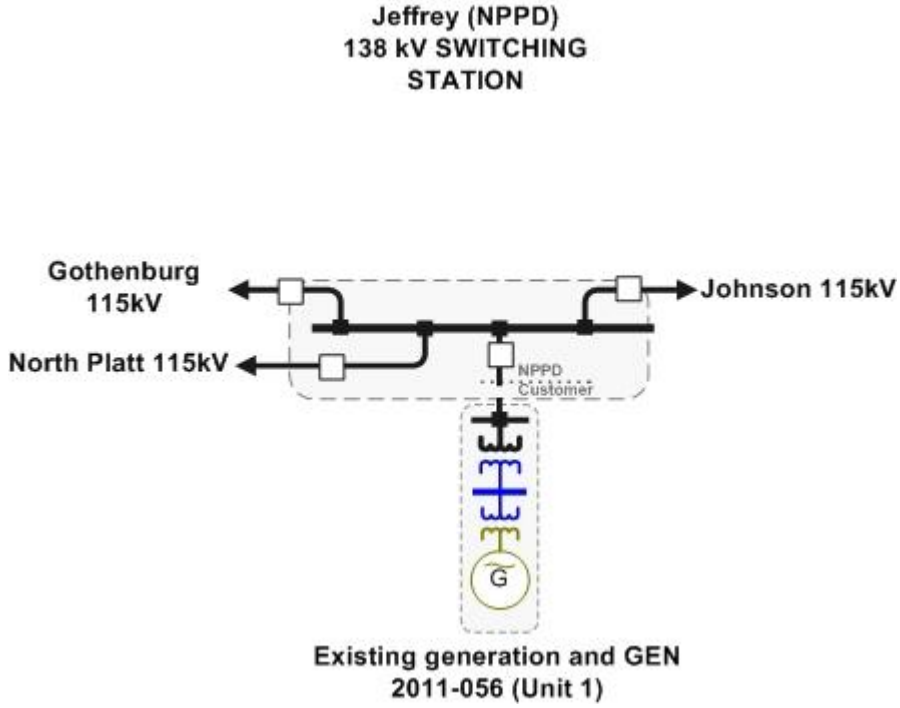

GEN-2011-056 (continued)

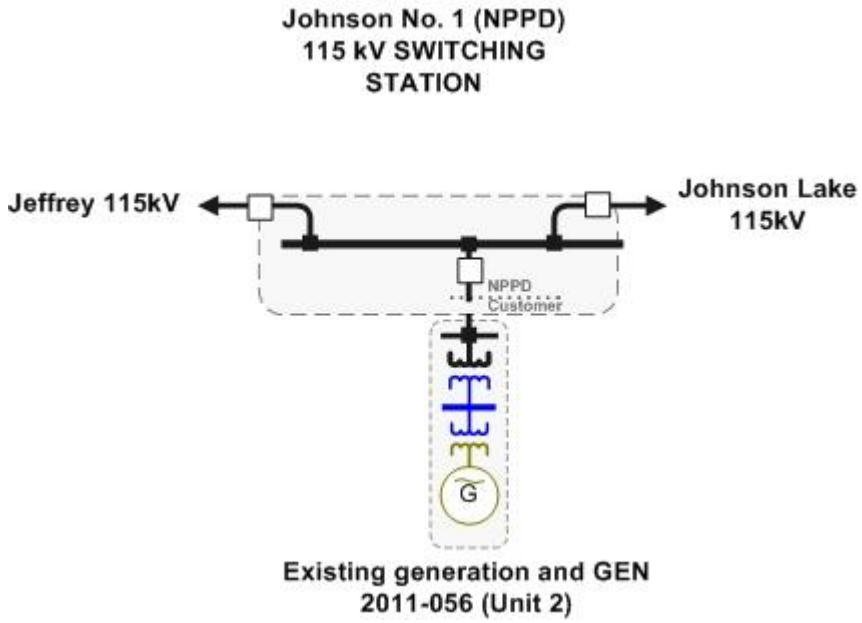

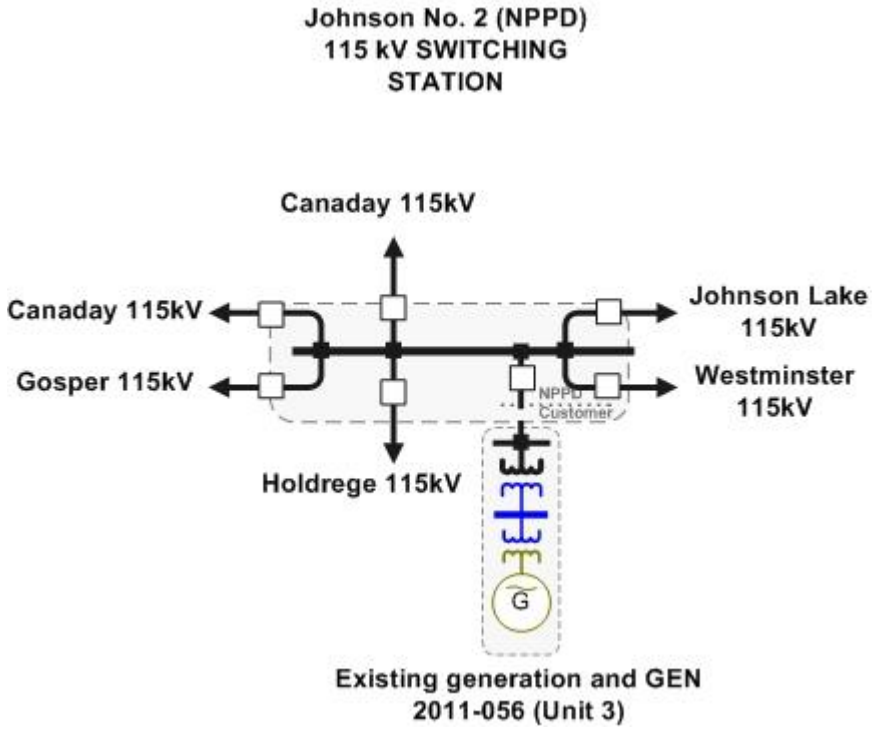

GEN-2011-057

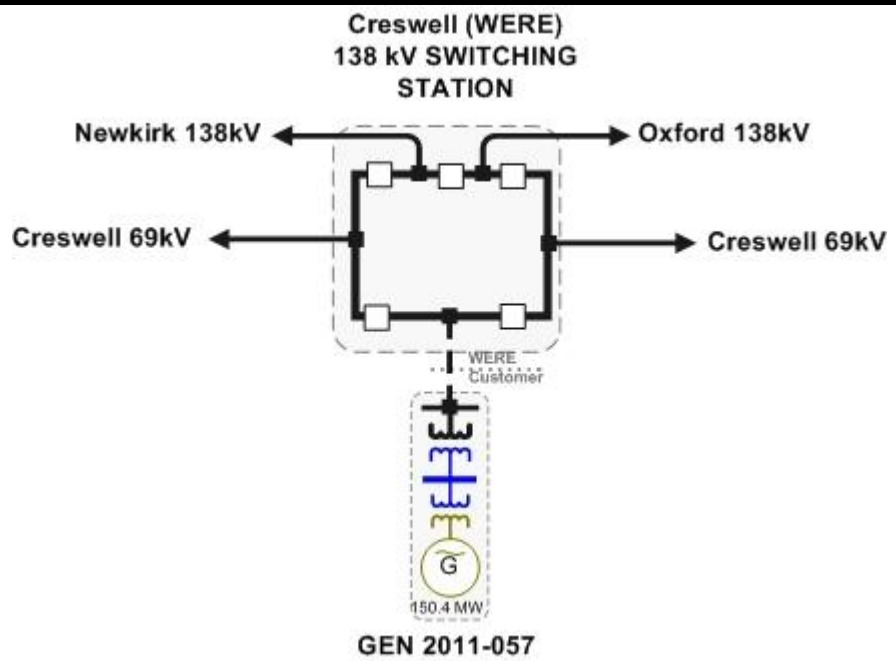

GEN-2011-058

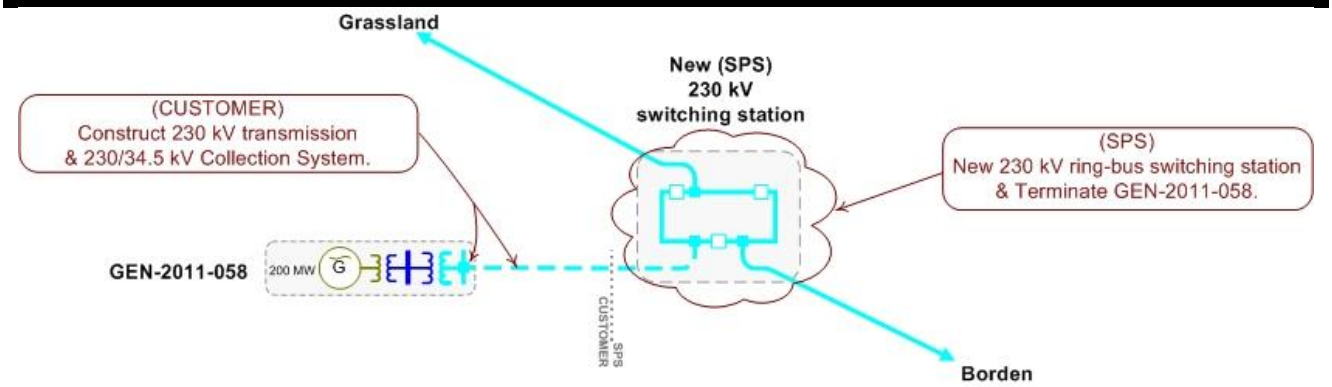

E: Cost Allocation per Interconnection Request (Including Prior Queued Upgrades)

Important Note:

****WITHDRAWAL OF HIGHER QUEUED PROJECTS WILL CAUSE A RESTUDY AND MAY RESULT IN HIGHER INTERCONNECTION COSTS****

This section shows each Generation Interconnection Request Customer, their current study impacted Network Upgrades, and the previously allocated upgrades upon which they rely to accommodate their interconnection to the transmission system.

The costs associated with the current study Network Upgrades are allocated to the Customers shown in this report.

In addition should a higher queued request, defined as one this study includes as a prior queued request, withdraw, the Network Upgrades assigned to the withdrawn request may be reallocated to the remaining requests that have an impact on the Network Upgrade under a restudy. Also, should a Interconnection Request choose to go into service prior to the operation date of any necessary Network Upgrades, the costs associated with those upgrades may be reallocated to the impacted Interconnection Request. The actual costs allocated to each Generation Interconnection Request Customer will be determined at the time of a restudy.

The required interconnection costs listed do not include all costs associated with the deliverability of the energy to final customers. These costs are determined by separate studies if the Customer submits a Transmission Service Request through SPP's Open Access Same Time Information System (OASIS) as required by Attachment Z1 of the SPP OATT. In addition, costs associated with a short circuit analysis will be allocated should the Interconnection Request Customer choose to execute a Facility Study Agreement.

Appendix E. Cost Allocation Per Request

(Including Perviously Allocated Network Upgrades*)

Interconnection Request and Upgrades	Upgrade Type	Allocated Cost	Upgrade Cost
ASGI-2011-004			
ASGI-2011-004 Interconnection Costs See Oneline Diagram.	Current Study	$1.00	$1.00
Jones - TUCO 230kV CKT 1 Replace line traps	Current Study	$3,567.15	$200,000.00
Potter - Tuco 345kV CKT 1 Build approximately 105 miles of 345kV from Potter Co - Tuco	Current Study	$3,031,035.25	$120,000,000.00
Yoakum - Mustang 230kV CKT 1 Replace line traps	Current Study	$612.21	$200,000.00
Beaver - Woodward 345kV Dbl CKT Priority Project: Hitchland - Woodward Dbl 345kV CKT (Total Project E&C Cost Shown)	Previously Allocated		$226,790,727.00
Beaver County - Gray County 345kV Build approximately 90 miles of 345kV from Beaver County - Gray County	Previously Allocated		$170,209,050.00
Border - Tuco Interchange 345KV CKT 1 Balanced Portfolio: Tuco - Woodward 345kV CKT 1 (Total Project E&C Cost Shown)	Previously Allocated		$143,377,063.00
Border - Woodward 345KV CKT 1 Balanced Portfolio: Tuco - Woodward 345kV CKT 1 (Total Project E&C Cost Shown)	Previously Allocated		$143,377,063.00
Hitchland - Beaver 345kV Dbl CKT Priority Project: Hitchland - Woodward Dbl 345kV CKT (Total Project E&C Cost Shown)	Previously Allocated		$226,790,727.00
Hitchland 345/230kV Autotransformer CKT 2 Priority Project: Hitchland 345/230kV Autotransformer CKT 2 (Total Project E&C Cost Shown).	Previously Allocated		$8,883,760.00
Thistle - Wichita 345KV Dbl CKT Priority Project: Thistle - Wichita Dbl 345kV CKT (Total Project E&C Cost Shown.)	Previously Allocated		$168,750,000.00
Thistle - Woodward 345KV Dbl CKT Priority Project: Thistle - Woodward Dbl 345kV CKT (Total Project E&C Cost Shown)	Previously Allocated		$212,090,000.00
	Current Study Total	$3,037,052.24	
GEN-2010-044			
GEN-2010-044 Interconnection Costs See Oneline Diagram.	Current Study	$2,000,000.00	$2,000,000.00

* Withdrawal of higher queued projects will cause a restudy and may result in higher costs

Interconnection Request and Upgrades	Upgrade Type	Allocated Cost	Upgrade Cost
Harbine - Beatrice 115kV CKT 1 NRIS only required upgrade: Rebuild approximately 15 miles of 115kV line	Current Study	$7,700,000.00	$7,700,000.00
Harbine - Crete 115kV CKT 1 Build approximately 35 miles of 115kV from Harbine - Crete	Current Study	$16,100,000.00	$16,100,000.00
Greenleaf - Knob Hill 115kV CKT 1 Per 2008-AG1	Previously Allocated		$0.00
Hitchland 345/230kV Autotransformer CKT 2 Priority Project: Hitchland 345/230kV Autotransformer CKT 2 (Total Project E&C Cost Shown).	Previously Allocated		$8,883,760.00
Sheldon - Folsom & Pleasant Hill 115kV CKT 2 NRIS only required upgrade: Per ITP NT 2011	Previously Allocated		$6,534,843.00
	Current Study Total	$25,800,000.00	

GEN-2010-061

GEN-2010-061 Interconnection Costs See Oneline Diagram.	Current Study	$9,000,000.00	$9,000,000.00
Knoll - North Hays - Vine Street 115kV CKT 1 NRIS only required upgrade: Rebuild approximately 6 miles of 115kV line	Current Study	$4,500,000.00	$4,500,000.00
Knoll - Postrock 230kV CKT 1 NRIS only required upgrade: Rebuild approximately 1 mile of 230kV @ 2000 amps	Current Study	$921,684.40	$1,000,000.00
Smokey Hills - Summit 230kV CKT 1 NRIS only required upgrade: Rebuild approximately 40 miles of 230kV	Current Study	$32,000,000.00	$32,000,000.00
Viola - Rose Hill 345kV CKT 1 Build approximately 45 miles of 345kV from Viola - Rose Hill	Current Study	$2,807,757.17	$75,000,000.00
Woodward - Tatonga 345kV CKT 2 Build second circuit from Woodward - Tatonga 345kV	Current Study	$6,203,974.02	$64,004,500.00
Axtell - PostRock 345KV CKT 1 Balanced Portfolio: PostRock - Axtell 345kV CKT 1 (Total Project E&C Cost Shown)	Previously Allocated		$93,302,649.00
Beaver - Woodward 345kV Dbl CKT Priority Project: Hitchland - Woodward Dbl 345kV CKT (Total Project E&C Cost Shown)	Previously Allocated		$226,790,727.00
Beaver County - Gray County 345kV Build approximately 90 miles of 345kV from Beaver County - Gray County	Previously Allocated		$170,209,050.00
Benton - Wichita 345kV NRIS only required upgrade: Replace terminal equipment at Benton and Wichita	Previously Allocated		$1,183,000.00

* Withdrawal of higher queued projects will cause a restudy and may result in higher costs

Interconnection Request and Upgrades	Upgrade Type	Allocated Cost	Upgrade Cost
Border - Tuco Interchange 345KV CKT 1 Balanced Portfolio: Tuco - Woodward 345kV CKT 1 (Total Project E&C Cost Shown)	Previously Allocated		$143,377,063.00
Circle - Reno 345kV Dbl CKT Build new 345kV line from Circle - Reno	Previously Allocated		$15,269,300.00
Clark - Thistle 345KV Dbl CKT Priority Project: Spearville - Clark - Thistle Dbl 345kV CKT (Total Project E&C Cost Shown.)	Previously Allocated		$291,088,131.00
Evans Energy Center - Maize 138kV NRIS only required upgrade: Replace terminal equipment	Previously Allocated		$4,186,119.00
GEN-2011-017T - Postrock 345kV CKT 1 Balanced Portfolio: Spearville - PostRock 345kV CKT 1 (Total Project E&C Cost Shown)	Previously Allocated		$77,703,351.00
Hitchland - Beaver 345kV Dbl CKT Priority Project: Hitchland - Woodward Dbl 345kV CKT (Total Project E&C Cost Shown)	Previously Allocated		$226,790,727.00
Hitchland - Border 345 kV CKT 1 Build approximately 105 miles of 345kV and SVC at Hitchland.	Previously Allocated		$227,757,964.00
Hitchland 345/230kV Autotransformer CKT 2 Priority Project: Hitchland 345/230kV Autotransformer CKT 2 (Total Project E&C Cost Shown).	Previously Allocated		$8,883,760.00
Matthewson - Cimarron 345kV CKT 2 Build second 345kV circuit from Matthewson - Cimarron @ 3000 amps	Previously Allocated		$42,903,753.00
Medicine Lodge 138/115kV transformer NRIS only required upgrade: Per 2007-AG3-AFS-9	Previously Allocated		$5,864,617.00
Mullegren - Circle 345kV Dbl CKT Build new double 345kV line from Mullergren - Circle	Previously Allocated		$132,000,000.00
Mullergren 345/230 kV transformer CKT 1 NRIS only required upgrade: Build new 345/230kV Transformer	Previously Allocated		$15,000,000.00
Post Rock 345/230/13.8KV Autotransformer CKT 1 Balanced Portfolio: PostRock Autotransformer 345/230/13.8kV CKT 1 (Total Project E&C Cost Shown)	Previously Allocated		$3,994,000.00
Post Rock 345/230/13.8kV Autotransformer CKT 2 DISIS-2010-001 Restudy	Previously Allocated		$13,749,527.00
Spearville - Mullergren 345kV Dbl CKT Build new 345kV line from Spearville - Mullergren	Previously Allocated		$124,000,000.00
Tatonga - Matthewson 345kV CKT 2 Build second 345kV circuit from Tatonga - Matthewson @ 3000 amps	Previously Allocated		$104,260,473.00

* Withdrawal of higher queued projects will cause a restudy and may result in higher costs

Interconnection Request and Upgrades	Upgrade Type	Allocated Cost	Upgrade Cost
Thistle - Wichita 345KV Dbl CKT Priority Project: Thistle - Wichita Dbl 345kV CKT (Total Project E&C Cost Shown.)	Previously Allocated		$168,750,000.00
Thistle - Woodward 345KV Dbl CKT Priority Project: Thistle - Woodward Dbl 345kV CKT (Total Project E&C Cost Shown)	Previously Allocated		$212,090,000.00
	Current Study Total	$55,433,415.59	
GEN-2011-037			
GEN-2011-037 Interconnection Costs See Oneline Diagram.	Current Study	$1.00	$1.00
Sunnyside - Hugo 345kV CKT 1 NTC 20017 & 20018 for In Service 4/1/2012.	Previously Allocated		$202,000,000.00
	Current Study Total	$1.00	
GEN-2011-040			
GEN-2011-040 Interconnection Costs See Oneline Diagram.	Current Study	$3,500,000.00	$3,500,000.00
Sunnyside - Hugo 345kV CKT 1 NTC 20017 & 20018 for In Service 4/1/2012.	Previously Allocated		$202,000,000.00
	Current Study Total	$3,500,000.00	
GEN-2011-041			
GEN-2011-041 Interconnection Costs See Oneline Diagram.	Current Study	$2,500,000.00	$2,500,000.00
Viola - Rose Hill 345kV CKT 1 Build approximately 45 miles of 345kV from Viola - Rose Hill	Current Study	$32,436,762.23	$75,000,000.00
Axtell - PostRock 345KV CKT 1 Balanced Portfolio: PostRock - Axtell 345kV CKT 1 (Total Project E&C Cost Shown)	Previously Allocated		$93,302,649.00
Beaver County - Gray County 345kV Build approximately 90 miles of 345kV from Beaver County - Gray County	Previously Allocated		$170,209,050.00
Cleveland - Sooner 345KV CKT 1 Balanced Portfolio: Cleveland - Sooner 345kV CKT 1 (Total Project E&C Cost Shown).	Previously Allocated		$70,806,000.00
Hitchland - Beaver 345kV Dbl CKT Priority Project: Hitchland - Woodward Dbl 345kV CKT (Total Project E&C Cost Shown)	Previously Allocated		$226,790,727.00
Matthewson - Cimarron 345kV CKT 2 Build second 345kV circuit from Matthewson - Cimarron @ 3000 amps	Previously Allocated		$42,903,753.00

* Withdrawal of higher queued projects will cause a restudy and may result in higher costs

Interconnection Request and Upgrades	Upgrade Type	Allocated Cost	Upgrade Cost
Spearville - GEN-2011-017T 345kV CKT 1 Balanced Portfolio: Spearville - PostRock 345kV CKT 1 (Total Project E&C Cost Shown)	Previously Allocated		$77,703,351.00
	Current Study Total	$34,936,762.23	

GEN-2011-042

GEN-2011-042 Interconnection Costs See Oneline Diagram.	Current Study	$2,500,000.00	$2,500,000.00
Viola - Rose Hill 345kV CKT 1 Build approximately 45 miles of 345kV from Viola - Rose Hill	Current Study	$32,436,762.23	$75,000,000.00
Axtell - PostRock 345KV CKT 1 Balanced Portfolio: PostRock - Axtell 345kV CKT 1 (Total Project E&C Cost Shown)	Previously Allocated		$93,302,649.00
Beaver County - Gray County 345kV Build approximately 90 miles of 345kV from Beaver County - Gray County	Previously Allocated		$170,209,050.00
Benton - Wichita 345kV NRIS only required upgrade: Replace terminal equipment at Benton and Wichita	Previously Allocated		$1,183,000.00
Cleveland - Sooner 345KV CKT 1 Balanced Portfolio: Cleveland - Sooner 345kV CKT 1 (Total Project E&C Cost Shown).	Previously Allocated		$70,806,000.00
Evans Energy Center - Maize 138kV NRIS only required upgrade: Replace terminal equipment	Previously Allocated		$4,186,119.00
Hitchland - Beaver 345kV Dbl CKT Priority Project: Hitchland - Woodward Dbl 345kV CKT (Total Project E&C Cost Shown)	Previously Allocated		$226,790,727.00
Matthewson - Cimarron 345kV CKT 2 Build second 345kV circuit from Matthewson - Cimarron @ 3000 amps	Previously Allocated		$42,903,753.00
Spearville - GEN-2011-017T 345kV CKT 1 Balanced Portfolio: Spearville - PostRock 345kV CKT 1 (Total Project E&C Cost Shown)	Previously Allocated		$77,703,351.00
	Current Study Total	$34,936,762.23	

GEN-2011-043

GEN-2011-043 Interconnection Costs See Oneline Diagram.	Current Study	$2,500,000.00	$2,500,000.00
Viola - Rose Hill 345kV CKT 1 Build approximately 45 miles of 345kV from Viola - Rose Hill	Current Study	$3,659,359.19	$75,000,000.00
Woodward - Tatonga 345kV CKT 2 Build second circuit from Woodward - Tatonga 345kV	Current Study	$6,549,669.07	$64,004,500.00

* Withdrawal of higher queued projects will cause a restudy and may result in higher costs

Interconnection Request and Upgrades	Upgrade Type	Allocated Cost	Upgrade Cost
Axtell - PostRock 345KV CKT 1 Balanced Portfolio: PostRock - Axtell 345kV CKT 1 (Total Project E&C Cost Shown)	Previously Allocated		$93,302,649.00
Beaver County - Gray County 345kV Build approximately 90 miles of 345kV from Beaver County - Gray County	Previously Allocated		$170,209,050.00
Border - Tuco Interchange 345KV CKT 1 Balanced Portfolio: Tuco - Woodward 345kV CKT 1 (Total Project E&C Cost Shown)	Previously Allocated		$143,377,063.00
Circle - Reno 345kV Dbl CKT Build new 345kV line from Circle - Reno	Previously Allocated		$15,269,300.00
Hitchland - Beaver 345kV Dbl CKT Priority Project: Hitchland - Woodward Dbl 345kV CKT (Total Project E&C Cost Shown)	Previously Allocated		$226,790,727.00
Hitchland 345/230kV Autotransformer CKT 2 Priority Project: Hitchland 345/230kV Autotransformer CKT 2 (Total Project E&C Cost Shown).	Previously Allocated		$8,883,760.00
Matthewson - Cimarron 345kV CKT 2 Build second 345kV circuit from Matthewson - Cimarron @ 3000 amps	Previously Allocated		$42,903,753.00
Mullegren - Circle 345kV Dbl CKT Build new double 345kV line from Mullergren - Circle	Previously Allocated		$132,000,000.00
Spearville - GEN-2011-017T 345kV CKT 1 Balanced Portfolio: Spearville - PostRock 345kV CKT 1 (Total Project E&C Cost Shown)	Previously Allocated		$77,703,351.00
Spearville - Mullergren 345kV Dbl CKT Build new 345kV line from Spearville - Mullergren	Previously Allocated		$124,000,000.00
Tatonga - Matthewson 345kV CKT 2 Build second 345kV circuit from Tatonga - Matthewson @ 3000 amps	Previously Allocated		$104,260,473.00
Thistle - Wichita 345KV Dbl CKT Priority Project: Thistle - Wichita Dbl 345kV CKT (Total Project E&C Cost Shown.)	Previously Allocated		$168,750,000.00
Thistle - Woodward 345KV Dbl CKT Priority Project: Thistle - Woodward Dbl 345kV CKT (Total Project E&C Cost Shown)	Previously Allocated		$212,090,000.00
	Current Study Total	$12,709,028.26	

GEN-2011-044

GEN-2011-044 Interconnection Costs See Oneline Diagram.	Current Study	$4,000,000.00	$4,000,000.00
Knoll - Postrock 230kV CKT 1 NRIS only required upgrade: Rebuild approximately 1 mile of 230kV @ 2000 amps	Current Study	$78,315.60	$1,000,000.00

* Withdrawal of higher queued projects will cause a restudy and may result in higher costs

Interconnection Request and Upgrades	Upgrade Type	Allocated Cost	Upgrade Cost
Viola - Rose Hill 345kV CKT 1 Build approximately 45 miles of 345kV from Viola - Rose Hill	Current Study	$3,659,359.19	$75,000,000.00
Woodward - Tatonga 345kV CKT 2 Build second circuit from Woodward - Tatonga 345kV	Current Study	$6,549,669.07	$64,004,500.00
Axtell - PostRock 345KV CKT 1 Balanced Portfolio: PostRock - Axtell 345kV CKT 1 (Total Project E&C Cost Shown)	Previously Allocated		$93,302,649.00
Beaver County - Gray County 345kV Build approximately 90 miles of 345kV from Beaver County - Gray County	Previously Allocated		$170,209,050.00
Benton - Wichita 345kV NRIS only required upgrade: Replace terminal equipment at Benton and Wichita	Previously Allocated		$1,183,000.00
Border - Tuco Interchange 345KV CKT 1 Balanced Portfolio: Tuco - Woodward 345kV CKT 1 (Total Project E&C Cost Shown)	Previously Allocated		$143,377,063.00
Circle - Reno 345kV Dbl CKT Build new 345kV line from Circle - Reno	Previously Allocated		$15,269,300.00
Cleo Corner - Glass Mountain 138kV NRIS only required upgrade: Rebuild approximately 26 miles of 138kV line	Previously Allocated		$24,000,000.00
Cleveland - Sooner 345KV CKT 1 Balanced Portfolio: Cleveland - Sooner 345kV CKT 1 (Total Project E&C Cost Shown).	Previously Allocated		$70,806,000.00
El Reno - Roman Nose 138kV NRIS only required upgrade: Rebuild approximately 27 miles of 138kV line	Previously Allocated		$25,000,000.00
Evans Energy Center - Maize 138kV NRIS only required upgrade: Replace terminal equipment	Previously Allocated		$4,186,119.00
Glass Mountain - Mooreland 138kV NRIS only required upgrade: Rebuild approximatley 24 miles of 138kV line	Previously Allocated		$17,059,900.00
Hitchland - Beaver 345kV Dbl CKT Priority Project: Hitchland - Woodward Dbl 345kV CKT (Total Project E&C Cost Shown)	Previously Allocated		$226,790,727.00
Hitchland 345/230kV Autotransformer CKT 2 Priority Project: Hitchland 345/230kV Autotransformer CKT 2 (Total Project E&C Cost Shown).	Previously Allocated		$8,883,760.00
Matthewson - Cimarron 345kV CKT 2 Build second 345kV circuit from Matthewson - Cimarron @ 3000 amps	Previously Allocated		$42,903,753.00
Mullegren - Circle 345kV Dbl CKT Build new double 345kV line from Mullergren - Circle	Previously Allocated		$132,000,000.00

* Withdrawal of higher queued projects will cause a restudy and may result in higher costs

Interconnection Request and Upgrades	Upgrade Type	Allocated Cost	Upgrade Cost
Roman Nose - Southard 138kV NRIS only required upgrade: Rebuild approximately 17 miles of 138kV line	Previously Allocated		$16,000,000.00
Spearville - GEN-2011-017T 345kV CKT 1 Balanced Portfolio: Spearville - PostRock 345kV CKT 1 (Total Project E&C Cost Shown)	Previously Allocated		$77,703,351.00
Spearville - Mullergren 345kV Dbl CKT Build new 345kV line from Spearville - Mullergren	Previously Allocated		$124,000,000.00
Tatonga - Matthewson 345kV CKT 2 Build second 345kV circuit from Tatonga - Matthewson @ 3000 amps	Previously Allocated		$104,260,473.00
Thistle - Wichita 345KV Dbl CKT Priority Project: Thistle - Wichita Dbl 345kV CKT (Total Project E&C Cost Shown.)	Previously Allocated		$168,750,000.00
Thistle - Woodward 345KV Dbl CKT Priority Project: Thistle - Woodward Dbl 345kV CKT (Total Project E&C Cost Shown)	Previously Allocated		$212,090,000.00
	Current Study Total	$14,287,343.86	
GEN-2011-045			
Allen - Lubbock South 115kV CKT 1 NRIS only required upgrade: Rebuild approximately 6 miles of 115kV from Allen - Lubbock South	Current Study	$1,587,124.83	$3,000,000.00
GEN-2011-045 Interconnection Costs See Oneline Diagram.	Current Study	$2,000,000.00	$2,000,000.00
Hale County - TUCO 115kV CKT 1 NRIS only required upgrade: Rebuild approximately 7 miles of 115kV from Hale County - Tuco	Current Study	$1,909,048.64	$3,500,000.00
Jones - Lubbock South 230kV CKT 2 Replace Line Traps	Current Study	$136,391.66	$200,000.00
Jones - TUCO 230kV CKT 1 Replace line traps	Current Study	$86,307.93	$200,000.00
Lubbock South - Lubbock East 115kV CKT 1 NRIS only required upgrade: Rebuild approximately 7 miles of 115kV from Lubbock South - Lubbock East	Current Study	$1,204,010.30	$3,500,000.00
Lubbock South 230/115kV Autotransformer CKT 2 NRIS only required upgrade: Install 2nd 230/115/13.2kV Autotransformer	Current Study	$2,452,497.55	$4,000,000.00
Potter - Tuco 345kV CKT 1 Build approximately 105 miles of 345kV from Potter Co - Tuco	Current Study	$46,732,214.12	$120,000,000.00
TUCO 345/230kV Autotransformer CKT 3 NRIS only required upgrade: Install 3rd 345/230/13.2kV Autotransformer	Current Study	$3,321,421.32	$10,000,000.00

* Withdrawal of higher queued projects will cause a restudy and may result in higher costs

Interconnection Request and Upgrades	Upgrade Type	Allocated Cost	Upgrade Cost
Wolfforth - Yuma 115kV CKT 1 NRIS only required upgrade: Rebuild approximately 6 miles of 115kV	Current Study	$450,441.77	$3,000,000.00
Beaver - Woodward 345kV Dbl CKT Priority Project: Hitchland - Woodward Dbl 345kV CKT (Total Project E&C Cost Shown)	Previously Allocated		$226,790,727.00
Beaver County - Gray County 345kV Build approximately 90 miles of 345kV from Beaver County - Gray County	Previously Allocated		$170,209,050.00
Border - Tuco Interchange 345KV CKT 1 Balanced Portfolio: Tuco - Woodward 345kV CKT 1 (Total Project E&C Cost Shown)	Previously Allocated		$143,377,063.00
Border - Woodward 345KV CKT 1 Balanced Portfolio: Tuco - Woodward 345kV CKT 1 (Total Project E&C Cost Shown)	Previously Allocated		$143,377,063.00
Cleo Corner - Glass Mountain 138kV NRIS only required upgrade: Rebuild approximately 26 miles of 138kV line	Previously Allocated		$24,000,000.00
Grassland - Wolfforth 230kV CKT 1 Per GEN-2008-016 Impact Study	Previously Allocated		$33,100,000.00
Hitchland - Beaver 345kV Dbl CKT Priority Project: Hitchland - Woodward Dbl 345kV CKT (Total Project E&C Cost Shown)	Previously Allocated		$226,790,727.00
Thistle - Wichita 345KV Dbl CKT Priority Project: Thistle - Wichita Dbl 345kV CKT (Total Project E&C Cost Shown.)	Previously Allocated		$168,750,000.00
Thistle - Woodward 345KV Dbl CKT Priority Project: Thistle - Woodward Dbl 345kV CKT (Total Project E&C Cost Shown)	Previously Allocated		$212,090,000.00
Thistle 345/138KV Transformer CKT 1 Priority Project: Thistle 345/138kV Transformer CKT 1 & Thistle - Flat Ridge 138kV CKT 1 (Total Project E&C Cost Shown.)	Previously Allocated		$9,106,306.00
	Current Study Total	$59,879,458.12	

GEN-2011-046

GEN-2011-046 Interconnection Costs See Oneline Diagram.	Current Study	$1,000,000.00	$1,000,000.00
Jones - TUCO 230kV CKT 1 Replace line traps	Current Study	$2,075.15	$200,000.00
Lubbock South - Lubbock East 115kV CKT 1 NRIS only required upgrade: Rebuild approximately 7 miles of 115kV from Lubbock South - Lubbock East	Current Study	$42,206.67	$3,500,000.00
Potter - Tuco 345kV CKT 1 Build approximately 105 miles of 345kV from Potter Co - Tuco	Current Study	$2,418,726.79	$120,000,000.00

* Withdrawal of higher queued projects will cause a restudy and may result in higher costs

Interconnection Request and Upgrades	Upgrade Type	Allocated Cost	Upgrade Cost
TUCO 345/230kV Autotransformer CKT 3 NRIS only required upgrade: Install 3rd 345/230/13.2kV Autotransformer	Current Study	$343,050.62	$10,000,000.00
Wolfforth - Yuma 115kV CKT 1 NRIS only required upgrade: Rebuild approximately 6 miles of 115kV	Current Study	$106,412.51	$3,000,000.00
Beaver - Woodward 345kV Dbl CKT Priority Project: Hitchland - Woodward Dbl 345kV CKT (Total Project E&C Cost Shown)	Previously Allocated		$226,790,727.00
Beaver County - Gray County 345kV Build approximately 90 miles of 345kV from Beaver County - Gray County	Previously Allocated		$170,209,050.00
Border - Tuco Interchange 345KV CKT 1 Balanced Portfolio: Tuco - Woodward 345kV CKT 1 (Total Project E&C Cost Shown)	Previously Allocated		$143,377,063.00
Border - Woodward 345KV CKT 1 Balanced Portfolio: Tuco - Woodward 345kV CKT 1 (Total Project E&C Cost Shown)	Previously Allocated		$143,377,063.00
Circle - Reno 345kV Dbl CKT Build new 345kV line from Circle - Reno	Previously Allocated		$15,269,300.00
Hitchland - Beaver 345kV Dbl CKT Priority Project: Hitchland - Woodward Dbl 345kV CKT (Total Project E&C Cost Shown)	Previously Allocated		$226,790,727.00
Thistle - Wichita 345KV Dbl CKT Priority Project: Thistle - Wichita Dbl 345kV CKT (Total Project E&C Cost Shown.)	Previously Allocated		$168,750,000.00
Thistle - Woodward 345KV Dbl CKT Priority Project: Thistle - Woodward Dbl 345kV CKT (Total Project E&C Cost Shown)	Previously Allocated		$212,090,000.00
Thistle 345/138KV Transformer CKT 1 Priority Project: Thistle 345/138kV Transformer CKT 1 & Thistle - Flat Ridge 138kV CKT 1 (Total Project E&C Cost Shown.)	Previously Allocated		$9,106,306.00
	Current Study Total	$3,912,471.74	

GEN-2011-048

GEN-2011-048 Interconnection Costs See Oneline Diagram.	Current Study	$4,000,000.00	$4,000,000.00
Jones - TUCO 230kV CKT 1 Replace line traps	Current Study	$27,471.86	$200,000.00
Lubbock South - Lubbock East 115kV CKT 1 NRIS only required upgrade: Rebuild approximately 7 miles of 115kV from Lubbock South - Lubbock East	Current Study	$681,625.96	$3,500,000.00
Lubbock South 230/115kV Autotransformer CKT 2 NRIS only required upgrade: Install 2nd 230/115/13.2kV Autotransformer	Current Study	$446,716.51	$4,000,000.00

* Withdrawal of higher queued projects will cause a restudy and may result in higher costs

Interconnection Request and Upgrades	Upgrade Type	Allocated Cost	Upgrade Cost
Potter - Tuco 345kV CKT 1 Build approximately 105 miles of 345kV from Potter Co - Tuco	Current Study	$24,403,882.38	$120,000,000.00
TUCO 345/230kV Autotransformer CKT 3 NRIS only required upgrade: Install 3rd 345/230/13.2kV Autotransformer	Current Study	$2,340,083.76	$10,000,000.00
Wolfforth - Yuma 115kV CKT 1 NRIS only required upgrade: Rebuild approximately 6 miles of 115kV	Current Study	$1,606,274.46	$3,000,000.00
Yoakum - Mustang 230kV CKT 1 Replace line traps	Current Study	$99,387.79	$200,000.00
Axtell - PostRock 345KV CKT 1 Balanced Portfolio: PostRock - Axtell 345kV CKT 1 (Total Project E&C Cost Shown)	Previously Allocated		$93,302,649.00
Beaver - Woodward 345kV Dbl CKT Priority Project: Hitchland - Woodward Dbl 345kV CKT (Total Project E&C Cost Shown)	Previously Allocated		$226,790,727.00
Beaver County - Gray County 345kV Build approximately 90 miles of 345kV from Beaver County - Gray County	Previously Allocated		$170,209,050.00
Border - Tuco Interchange 345KV CKT 1 Balanced Portfolio: Tuco - Woodward 345kV CKT 1 (Total Project E&C Cost Shown)	Previously Allocated		$143,377,063.00
Border - Woodward 345KV CKT 1 Balanced Portfolio: Tuco - Woodward 345kV CKT 1 (Total Project E&C Cost Shown)	Previously Allocated		$143,377,063.00
Cleveland - Sooner 345KV CKT 1 Balanced Portfolio: Cleveland - Sooner 345kV CKT 1 (Total Project E&C Cost Shown).	Previously Allocated		$70,806,000.00
Hitchland - Beaver 345kV Dbl CKT Priority Project: Hitchland - Woodward Dbl 345kV CKT (Total Project E&C Cost Shown)	Previously Allocated		$226,790,727.00
Thistle - Wichita 345KV Dbl CKT Priority Project: Thistle - Wichita Dbl 345kV CKT (Total Project E&C Cost Shown.)	Previously Allocated		$168,750,000.00
Thistle - Woodward 345KV Dbl CKT Priority Project: Thistle - Woodward Dbl 345kV CKT (Total Project E&C Cost Shown)	Previously Allocated		$212,090,000.00
Thistle 345/138KV Transformer CKT 1 Priority Project: Thistle 345/138kV Transformer CKT 1 & Thistle - Flat Ridge 138kV CKT 1 (Total Project E&C Cost Shown.)	Previously Allocated		$9,106,306.00
	Current Study Total	$33,903,606.09	

GEN-2011-049

GEN-2011-049 Interconnection Costs See Oneline Diagram.	Current Study	$10,000,000.00	$10,000,000.00

* Withdrawal of higher queued projects will cause a restudy and may result in higher costs

Interconnection Request and Upgrades	Upgrade Type	Allocated Cost	Upgrade Cost
Grapevine - Stateline 230kV CKT 1 NRIS only required upgrade: Replace terminal equipment	Current Study	$200,000.00	$200,000.00
Jones - TUCO 230kV CKT 1 Replace line traps	Current Study	$6,750.14	$200,000.00
TUCO 345/230kV Autotransformer CKT 3 NRIS only required upgrade: Install 3rd 345/230/13.2kV Autotransformer	Current Study	$814,473.36	$10,000,000.00
Woodward - Tatonga 345kV CKT 2 Build second circuit from Woodward - Tatonga 345kV	Current Study	$18,776,639.41	$64,004,500.00
Axtell - PostRock 345KV CKT 1 Balanced Portfolio: PostRock - Axtell 345kV CKT 1 (Total Project E&C Cost Shown)	Previously Allocated		$93,302,649.00
Beaver County - Gray County 345kV Build approximately 90 miles of 345kV from Beaver County - Gray County	Previously Allocated		$170,209,050.00
Benton - Wichita 345kV NRIS only required upgrade: Replace terminal equipment at Benton and Wichita	Previously Allocated		$1,183,000.00
Border - Tuco Interchange 345KV CKT 1 Balanced Portfolio: Tuco - Woodward 345kV CKT 1 (Total Project E&C Cost Shown)	Previously Allocated		$143,377,063.00
Border - Woodward 345KV CKT 1 Balanced Portfolio: Tuco - Woodward 345kV CKT 1 (Total Project E&C Cost Shown)	Previously Allocated		$143,377,063.00
Cleo Corner - Glass Mountain 138kV NRIS only required upgrade: Rebuild approximately 26 miles of 138kV line	Previously Allocated		$24,000,000.00
Cleveland - Sooner 345KV CKT 1 Balanced Portfolio: Cleveland - Sooner 345kV CKT 1 (Total Project E&C Cost Shown).	Previously Allocated		$70,806,000.00
Clinton Junction - Elk City 138kV Rebuild 24 miles of 138kV from Clinton Junction - Elk City	Previously Allocated		$20,300,007.00
Dover Switch - Okeene 138kV NRIS only required upgrade: Rebuild approximately 27 miles of 138kV line	Previously Allocated		$11,000,000.00
El Reno - Roman Nose 138kV NRIS only required upgrade: Rebuild approximately 27 miles of 138kV line	Previously Allocated		$25,000,000.00
Elk City Terminal Equipment NRIS only required upgrade: Replace terminal equipment at Elk city	Previously Allocated		$379,649.00
Evans Energy Center - Maize 138kV NRIS only required upgrade: Replace terminal equipment	Previously Allocated		$4,186,119.00

* Withdrawal of higher queued projects will cause a restudy and may result in higher costs

Interconnection Request and Upgrades	Upgrade Type	Allocated Cost	Upgrade Cost
Finney Switching Station - Holcomb 345KV CKT 2 Per GEN-2006-044 Facility Study	Previously Allocated		$6,299,839.00
FPL Switch - Woodward 138kV CKT 1 Per 2010-AGP1-AFS-6	Previously Allocated		$6,000,000.00
Glass Mountain - Mooreland 138kV NRIS only required upgrade: Rebuild approximatley 24 miles of 138kV line	Previously Allocated		$17,059,900.00
Hitchland - Beaver 345kV Dbl CKT Priority Project: Hitchland - Woodward Dbl 345kV CKT (Total Project E&C Cost Shown)	Previously Allocated		$226,790,727.00
Hitchland 345/230kV Autotransformer CKT 2 Priority Project: Hitchland 345/230kV Autotransformer CKT 2 (Total Project E&C Cost Shown).	Previously Allocated		$8,883,760.00
Matthewson - Cimarron 345kV CKT 2 Build second 345kV circuit from Matthewson - Cimarron @ 3000 amps	Previously Allocated		$42,903,753.00
Roman Nose - Southard 138kV NRIS only required upgrade: Rebuild approximately 17 miles of 138kV line	Previously Allocated		$16,000,000.00
Spearville - GEN-2011-017T 345kV CKT 1 Balanced Portfolio: Spearville - PostRock 345kV CKT 1 (Total Project E&C Cost Shown)	Previously Allocated		$77,703,351.00
Spearville - Mullergren 345kV Dbl CKT Build new 345kV line from Spearville - Mullergren	Previously Allocated		$124,000,000.00
Tatonga - Matthewson 345kV CKT 2 Build second 345kV circuit from Tatonga - Matthewson @ 3000 amps	Previously Allocated		$104,260,473.00
Thistle - Wichita 345KV Dbl CKT Priority Project: Thistle - Wichita Dbl 345kV CKT (Total Project E&C Cost Shown.)	Previously Allocated		$168,750,000.00
Thistle - Woodward 345KV Dbl CKT Priority Project: Thistle - Woodward Dbl 345kV CKT (Total Project E&C Cost Shown)	Previously Allocated		$212,090,000.00
Thistle 345/138KV Transformer CKT 1 Priority Project: Thistle 345/138kV Transformer CKT 1 & Thistle - Flat Ridge 138kV CKT 1 (Total Project E&C Cost Shown.)	Previously Allocated		$9,106,306.00
TUCO Interchange 345/230/13.2KV Autotransformer CKT 2 Balanced Portfolio: TUCO 345/230 kV Transformer CKT 2 (Total Project E&C Cost Shown)	Previously Allocated		$14,900,907.00
	Current Study Total	$29,797,862.91	
GEN-2011-050			
Cimarron - Draper 345kV CKT 1 NRIS only required upgrade: Replace Line Traps	Current Study	$42,054.99	$1,000,000.00

* Withdrawal of higher queued projects will cause a restudy and may result in higher costs

Interconnection Request and Upgrades	Upgrade Type	Allocated Cost	Upgrade Cost
Comanche - Comanche Tap 69kV CKT 1 Rebuild approximately 3 miles of 69kV @ 600 amps	Current Study	$1,500,000.00	$1,500,000.00
Cornville Tap - Paoli 138kV CKT 1 NRIS only required upgrade: Replace CTs	Current Study	$100,000.00	$100,000.00
Duncan - Tosco 69kV CKT 1 NRIS only required upgrade: Rebuild approximately 4 miles of 69kV @ 600 amps	Current Study	$2,000,000.00	$2,000,000.00
GEN-2011-050 Interconnection Costs See Oneline Diagram.	Current Study	$5,000,000.00	$5,000,000.00
Sunnyside - Hugo 345kV CKT 1 NTC 20017 & 20018 for In Service 4/1/2012.	Previously Allocated		$202,000,000.00
Thistle - Wichita 345KV Dbl CKT Priority Project: Thistle - Wichita Dbl 345kV CKT (Total Project E&C Cost Shown.)	Previously Allocated		$168,750,000.00
Thistle - Woodward 345KV Dbl CKT Priority Project: Thistle - Woodward Dbl 345kV CKT (Total Project E&C Cost Shown)	Previously Allocated		$212,090,000.00
Washita - Gracemont 138kV CKT 2 Build approximately 11 miles of 138kV.	Previously Allocated		$5,621,986.00
	Current Study Total	$8,642,054.99	
GEN-2011-051			
Cimarron - Draper 345kV CKT 1 NRIS only required upgrade: Replace Line Traps	Current Study	$154,349.88	$1,000,000.00
GEN-2011-051 Interconnection Costs See Oneline Diagram.	Current Study	$10,000,000.00	$10,000,000.00
Woodward - Tatonga 345kV CKT 2 Build second circuit from Woodward - Tatonga 345kV	Current Study	$12,630,086.11	$64,004,500.00
Axtell - PostRock 345KV CKT 1 Balanced Portfolio: PostRock - Axtell 345kV CKT 1 (Total Project E&C Cost Shown)	Previously Allocated		$93,302,649.00
Beaver - Woodward 345kV Dbl CKT Priority Project: Hitchland - Woodward Dbl 345kV CKT (Total Project E&C Cost Shown)	Previously Allocated		$226,790,727.00
Beaver County - Gray County 345kV Build approximately 90 miles of 345kV from Beaver County - Gray County	Previously Allocated		$170,209,050.00
Benton - Wichita 345kV NRIS only required upgrade: Replace terminal equipment at Benton and Wichita	Previously Allocated		$1,183,000.00

* Withdrawal of higher queued projects will cause a restudy and may result in higher costs

Interconnection Request and Upgrades	Upgrade Type	Allocated Cost	Upgrade Cost
Border - Tuco Interchange 345KV CKT 1 Balanced Portfolio: Tuco - Woodward 345kV CKT 1 (Total Project E&C Cost Shown)	Previously Allocated		$143,377,063.00
Border - Woodward 345KV CKT 1 Balanced Portfolio: Tuco - Woodward 345kV CKT 1 (Total Project E&C Cost Shown)	Previously Allocated		$143,377,063.00
Circle - Reno 345kV Dbl CKT Build new 345kV line from Circle - Reno	Previously Allocated		$15,269,300.00
Cleo Corner - Glass Mountain 138kV NRIS only required upgrade: Rebuild approximately 26 miles of 138kV line	Previously Allocated		$24,000,000.00
Dover Switch - Okeene 138kV NRIS only required upgrade: Rebuild approximately 27 miles of 138kV line	Previously Allocated		$11,000,000.00
El Reno - Roman Nose 138kV NRIS only required upgrade: Rebuild approximately 27 miles of 138kV line	Previously Allocated		$25,000,000.00
FPL Switch - Woodward 138kV CKT 1 Per 2010-AGP1-AFS-6	Previously Allocated		$6,000,000.00
Glass Mountain - Mooreland 138kV NRIS only required upgrade: Rebuild approximatley 24 miles of 138kV line	Previously Allocated		$17,059,900.00
Hitchland - Beaver 345kV Dbl CKT Priority Project: Hitchland - Woodward Dbl 345kV CKT (Total Project E&C Cost Shown)	Previously Allocated		$226,790,727.00
Hitchland 345/230kV Autotransformer CKT 2 Priority Project: Hitchland 345/230kV Autotransformer CKT 2 (Total Project E&C Cost Shown).	Previously Allocated		$8,883,760.00
Matthewson - Cimarron 345kV CKT 2 Build second 345kV circuit from Matthewson - Cimarron @ 3000 amps	Previously Allocated		$42,903,753.00
Mullegren - Circle 345kV Dbl CKT Build new double 345kV line from Mullergren - Circle	Previously Allocated		$132,000,000.00
Roman Nose - Southard 138kV NRIS only required upgrade: Rebuild approximately 17 miles of 138kV line	Previously Allocated		$16,000,000.00
Spearville - GEN-2011-017T 345kV CKT 1 Balanced Portfolio: Spearville - PostRock 345kV CKT 1 (Total Project E&C Cost Shown)	Previously Allocated		$77,703,351.00
Spearville - Mullergren 345kV Dbl CKT Build new 345kV line from Spearville - Mullergren	Previously Allocated		$124,000,000.00
Tatonga - Matthewson 345kV CKT 2 Build second 345kV circuit from Tatonga - Matthewson @ 3000 amps	Previously Allocated		$104,260,473.00

* Withdrawal of higher queued projects will cause a restudy and may result in higher costs

Interconnection Request and Upgrades	Upgrade Type	Allocated Cost	Upgrade Cost
Thistle - Wichita 345KV Dbl CKT Priority Project: Thistle - Wichita Dbl 345kV CKT (Total Project E&C Cost Shown.)	Previously Allocated		$168,750,000.00
Thistle - Woodward 345KV Dbl CKT Priority Project: Thistle - Woodward Dbl 345kV CKT (Total Project E&C Cost Shown)	Previously Allocated		$212,090,000.00
Thistle 345/138KV Transformer CKT 1 Priority Project: Thistle 345/138kV Transformer CKT 1 & Thistle - Flat Ridge 138kV CKT 1 (Total Project E&C Cost Shown.)	Previously Allocated		$9,106,306.00
	Current Study Total	$22,784,435.99	
GEN-2011-054			
Cimarron - Draper 345kV CKT 1 NRIS only required upgrade: Replace Line Traps	Current Study	$803,595.12	$1,000,000.00
GEN-2011-054 Interconnection Costs See Oneline Diagram.	Current Study	$4,000,000.00	$4,000,000.00
Woodward - Tatonga 345kV CKT 2 Build second circuit from Woodward - Tatonga 345kV	Current Study	$13,294,462.33	$64,004,500.00
Axtell - PostRock 345KV CKT 1 Balanced Portfolio: PostRock - Axtell 345kV CKT 1 (Total Project E&C Cost Shown)	Previously Allocated		$93,302,649.00
Beaver - Woodward 345kV Dbl CKT Priority Project: Hitchland - Woodward Dbl 345kV CKT (Total Project E&C Cost Shown)	Previously Allocated		$226,790,727.00
Beaver County - Gray County 345kV Build approximately 90 miles of 345kV from Beaver County - Gray County	Previously Allocated		$170,209,050.00
Border - Tuco Interchange 345KV CKT 1 Balanced Portfolio: Tuco - Woodward 345kV CKT 1 (Total Project E&C Cost Shown)	Previously Allocated		$143,377,063.00
Border - Woodward 345KV CKT 1 Balanced Portfolio: Tuco - Woodward 345kV CKT 1 (Total Project E&C Cost Shown)	Previously Allocated		$143,377,063.00
Hitchland - Beaver 345kV Dbl CKT Priority Project: Hitchland - Woodward Dbl 345kV CKT (Total Project E&C Cost Shown)	Previously Allocated		$226,790,727.00
Hitchland 345/230kV Autotransformer CKT 2 Priority Project: Hitchland 345/230kV Autotransformer CKT 2 (Total Project E&C Cost Shown).	Previously Allocated		$8,883,760.00
Spearville - GEN-2011-017T 345kV CKT 1 Balanced Portfolio: Spearville - PostRock 345kV CKT 1 (Total Project E&C Cost Shown)	Previously Allocated		$77,703,351.00
Thistle - Woodward 345KV Dbl CKT Priority Project: Thistle - Woodward Dbl 345kV CKT (Total Project E&C Cost Shown)	Previously Allocated		$212,090,000.00

* Withdrawal of higher queued projects will cause a restudy and may result in higher costs

Interconnection Request and Upgrades	Upgrade Type	Allocated Cost	Upgrade Cost
	Current Study Total	$18,098,057.45	
GEN-2011-055			
GEN-2011-055 Interconnection Costs See Oneline Diagram.	Current Study	$4,300,000.00	$4,300,000.00
Nebraska City U Syracuse - SUB 970 CKT 1 NRIS only required upgrade: Replace Terminal Equipment	Current Study	$20,000.00	$20,000.00
SUB 967 - SUB 968 69kV CKT 1 Replace terminal equipment	Current Study	$16,000.00	$16,000.00
SUB 968 - SUB 969 69kV CKT 1 Mitigated by replacing terminal equipment at Sub 969	Current Study	$0.00	$0.00
SUB 969 - SUB 974 69kV CKT 1 Mitigated by replacing terminal equipment at Sub 969	Current Study	$0.00	$0.00
West Brock - SUB967 69kV CKT 1 Mitigated by replacing terminal equipment at Sub 967	Current Study	$0.00	$0.00
Greenleaf - Knob Hill 115kV CKT 1 Per 2008-AG1	Previously Allocated		$0.00
Sheldon - Folsom & Pleasant Hill 115kV CKT 2 NRIS only required upgrade: Per ITP NT 2011	Previously Allocated		$6,534,843.00
	Current Study Total	$4,336,000.00	
GEN-2011-056			
GEN-2011-056 Interconnection Costs See Oneline Diagram.	Current Study	$1.00	$1.00
	Current Study Total	$1.00	
GEN-2011-057			
GEN-2011-057 Interconnection Costs See Oneline Diagram.	Current Study	$5,000,000.00	$5,000,000.00
Axtell - PostRock 345KV CKT 1 Balanced Portfolio: PostRock - Axtell 345kV CKT 1 (Total Project E&C Cost Shown)	Previously Allocated		$93,302,649.00
Beaver County - Gray County 345kV Build approximately 90 miles of 345kV from Beaver County - Gray County	Previously Allocated		$170,209,050.00
Cleveland - Sooner 345KV CKT 1 Balanced Portfolio: Cleveland - Sooner 345kV CKT 1 (Total Project E&C Cost Shown).	Previously Allocated		$70,806,000.00

* Withdrawal of higher queued projects will cause a restudy and may result in higher costs

Interconnection Request and Upgrades	Upgrade Type	Allocated Cost	Upgrade Cost
Hitchland - Beaver 345kV Dbl CKT Priority Project: Hitchland - Woodward Dbl 345kV CKT (Total Project E&C Cost Shown)	Previously Allocated		$226,790,727.00
Matthewson - Cimarron 345kV CKT 2 Build second 345kV circuit from Matthewson - Cimarron @ 3000 amps	Previously Allocated		$42,903,753.00
	Current Study Total	$5,000,000.00	
GEN-2011-058			
Allen - Lubbock South 115kV CKT 1 NRIS only required upgrade: Rebuild approximately 6 miles of 115kV from Allen - Lubbock South	Current Study	$1,412,875.17	$3,000,000.00
GEN-2011-058 Interconnection Costs See Oneline Diagram.	Current Study	$4,000,000.00	$4,000,000.00
GEN-2011-058T - Grassland 230kV CKT 2 Build second circuit from Grassland - Gen-2011-058T	Current Study	$17,070,000.00	$17,070,000.00
Hale County - TUCO 115kV CKT 1 NRIS only required upgrade: Rebuild approximately 7 miles of 115kV from Hale County - Tuco	Current Study	$1,590,951.36	$3,500,000.00
Jones - Lubbock South 230kV CKT 2 Replace Line Traps	Current Study	$63,608.34	$200,000.00
Jones - TUCO 230kV CKT 1 Replace line traps	Current Study	$73,827.77	$200,000.00
Lubbock South - Lubbock East 115kV CKT 1 NRIS only required upgrade: Rebuild approximately 7 miles of 115kV from Lubbock South - Lubbock East	Current Study	$1,572,157.08	$3,500,000.00
Lubbock South 230/115kV Autotransformer CKT 2 NRIS only required upgrade: Install 2nd 230/115/13.2kV Autotransformer	Current Study	$1,100,785.93	$4,000,000.00
Potter - Tuco 345kV CKT 1 Build approximately 105 miles of 345kV from Potter Co - Tuco	Current Study	$43,414,141.46	$120,000,000.00
TUCO 345/230kV Autotransformer CKT 3 NRIS only required upgrade: Install 3rd 345/230/13.2kV Autotransformer	Current Study	$3,180,970.94	$10,000,000.00
Wolfforth - Yuma 115kV CKT 1 NRIS only required upgrade: Rebuild approximately 6 miles of 115kV	Current Study	$836,871.26	$3,000,000.00
Beaver - Woodward 345kV Dbl CKT Priority Project: Hitchland - Woodward Dbl 345kV CKT (Total Project E&C Cost Shown)	Previously Allocated		$226,790,727.00
Beaver County - Gray County 345kV Build approximately 90 miles of 345kV from Beaver County - Gray County	Previously Allocated		$170,209,050.00

* Withdrawal of higher queued projects will cause a restudy and may result in higher costs

Interconnection Request and Upgrades	Upgrade Type	Allocated Cost	Upgrade Cost
Border - Tuco Interchange 345KV CKT 1 Balanced Portfolio: Tuco - Woodward 345kV CKT 1 (Total Project E&C Cost Shown)	Previously Allocated		$143,377,063.00
Border - Woodward 345KV CKT 1 Balanced Portfolio: Tuco - Woodward 345kV CKT 1 (Total Project E&C Cost Shown)	Previously Allocated		$143,377,063.00
Dover Switch - Okeene 138kV NRIS only required upgrade: Rebuild approximately 27 miles of 138kV line	Previously Allocated		$11,000,000.00
Glass Mountain - Mooreland 138kV NRIS only required upgrade: Rebuild approximatley 24 miles of 138kV line	Previously Allocated		$17,059,900.00
Grassland - Wolfforth 230kV CKT 1 Per GEN-2008-016 Impact Study	Previously Allocated		$33,100,000.00
Grassland 230/115kV CKT 1 NRIS only required upgrade: Per ITP NT 2011	Previously Allocated		$4,473,000.00
Hitchland - Beaver 345kV Dbl CKT Priority Project: Hitchland - Woodward Dbl 345kV CKT (Total Project E&C Cost Shown)	Previously Allocated		$226,790,727.00
Hitchland 345/230kV Autotransformer CKT 2 Priority Project: Hitchland 345/230kV Autotransformer CKT 2 (Total Project E&C Cost Shown).	Previously Allocated		$8,883,760.00
Spearville - GEN-2011-017T 345kV CKT 1 Balanced Portfolio: Spearville - PostRock 345kV CKT 1 (Total Project E&C Cost Shown)	Previously Allocated		$77,703,351.00
Tatonga - Matthewson 345kV CKT 2 Build second 345kV circuit from Tatonga - Matthewson @ 3000 amps	Previously Allocated		$104,260,473.00
Thistle - Wichita 345KV Dbl CKT Priority Project: Thistle - Wichita Dbl 345kV CKT (Total Project E&C Cost Shown.)	Previously Allocated		$168,750,000.00
Thistle - Woodward 345KV Dbl CKT Priority Project: Thistle - Woodward Dbl 345kV CKT (Total Project E&C Cost Shown)	Previously Allocated		$212,090,000.00
	Current Study Total	$74,316,189.31	

TOTAL CURRENT STUDY COSTS: $445,310,503.01

* Withdrawal of higher queued projects will cause a restudy and may result in higher costs

F: Cost Allocation per Proposed Study Network Upgrade

Important Note:

****WITHDRAWAL OF HIGHER QUEUED PROJECTS WILL CAUSE A RESTUDY AND MAY RESULT IN HIGHER INTERCONNECTION COSTS****

This section shows each Direct Assigned Facility and Network Upgrade and the Generation Interconnection Request Customer(s) which have an impact in this study assuming all higher queued projects remain in the queue and achieve commercial operation.

The required interconnection costs listed do not include all costs associated with the deliverability of the energy to final customers. These costs are determined by separate studies if the Customer submits a Transmission Service Request through SPP's Open Access Same Time Information System (OASIS) as required by Attachment Z1 of the SPP OATT. In addition, costs associated with a short circuit analysis will be allocated should the Interconnection Request Customer choose to execute a Facility Study Agreement.

There may be additional costs allocated to each Customer. See Appendix E for more details.

Appendix F. Cost Allocation by Upgrade

Allen - Lubbock South 115kV CKT 1		**$3,000,000.00**
NRIS only required upgrade: Rebuild approximately 6 miles of 115kV from Allen - Lubbock South		
GEN-2011-045	$1,587,124.83	
GEN-2011-058	$1,412,875.17	
Total Allocated Costs	**$3,000,000.00**	
ASGI-2011-004 Interconnection Costs		**$1.00**
See Oneline Diagram.		
ASGI-2011-004	$1.00	
Total Allocated Costs	**$1.00**	
Cimarron - Draper 345kV CKT 1		**$1,000,000.00**
NRIS only required upgrade: Replace Line Traps		
GEN-2011-050	$42,054.99	
GEN-2011-051	$154,349.88	
GEN-2011-054	$803,595.12	
Total Allocated Costs	**$1,000,000.00**	
Comanche - Comanche Tap 69kV CKT 1		**$1,500,000.00**
Rebuild approximately 3 miles of 69kV @ 600 amps		
GEN-2011-050	$1,500,000.00	
Total Allocated Costs	**$1,500,000.00**	
Cornville Tap - Paoli 138kV CKT 1		**$100,000.00**
NRIS only required upgrade: Replace CTs		
GEN-2011-050	$100,000.00	
Total Allocated Costs	**$100,000.00**	
Duncan - Tosco 69kV CKT 1		**$2,000,000.00**
NRIS only required upgrade: Rebuild approximately 4 miles of 69kV @ 600 amps		
GEN-2011-050	$2,000,000.00	
Total Allocated Costs	**$2,000,000.00**	
GEN-2011-058T - Grassland 230kV CKT 2		**$17,070,000.00**
Build second circuit from Grassland - Gen-2011-058T		
GEN-2011-058	$17,070,000.00	
Total Allocated Costs	**$17,070,000.00**	

* Withdrawal of higher queued projects will cause a restudy and may result in higher costs

GEN-2010-044 Interconnection Costs			**$2,000,000.00**
See Oneline Diagram.			
	GEN-2010-044	$2,000,000.00	
	Total Allocated Costs	**$2,000,000.00**	
GEN-2010-061 Interconnection Costs			**$9,000,000.00**
See Oneline Diagram.			
	GEN-2010-061	$9,000,000.00	
	Total Allocated Costs	**$9,000,000.00**	
GEN-2011-037 Interconnection Costs			**$1.00**
See Oneline Diagram.			
	GEN-2011-037	$1.00	
	Total Allocated Costs	**$1.00**	
GEN-2011-040 Interconnection Costs			**$3,500,000.00**
See Oneline Diagram.			
	GEN-2011-040	$3,500,000.00	
	Total Allocated Costs	**$3,500,000.00**	
GEN-2011-041 Interconnection Costs			**$2,500,000.00**
See Oneline Diagram.			
	GEN-2011-041	$2,500,000.00	
	Total Allocated Costs	**$2,500,000.00**	
GEN-2011-042 Interconnection Costs			**$2,500,000.00**
See Oneline Diagram.			
	GEN-2011-042	$2,500,000.00	
	Total Allocated Costs	**$2,500,000.00**	
GEN-2011-043 Interconnection Costs			**$2,500,000.00**
See Oneline Diagram.			
	GEN-2011-043	$2,500,000.00	
	Total Allocated Costs	**$2,500,000.00**	
GEN-2011-044 Interconnection Costs			**$4,000,000.00**
See Oneline Diagram.			
	GEN-2011-044	$4,000,000.00	
	Total Allocated Costs	**$4,000,000.00**	

* Withdrawal of higher queued projects will cause a restudy and may result in higher costs

GEN-2011-045 Interconnection Costs			**$2,000,000.00**
See Oneline Diagram.			
	GEN-2011-045	$2,000,000.00	
	Total Allocated Costs	**$2,000,000.00**	
GEN-2011-046 Interconnection Costs			**$1,000,000.00**
See Oneline Diagram.			
	GEN-2011-046	$1,000,000.00	
	Total Allocated Costs	**$1,000,000.00**	
GEN-2011-048 Interconnection Costs			**$4,000,000.00**
See Oneline Diagram.			
	GEN-2011-048	$4,000,000.00	
	Total Allocated Costs	**$4,000,000.00**	
GEN-2011-049 Interconnection Costs			**$10,000,000.00**
See Oneline Diagram.			
	GEN-2011-049	$10,000,000.00	
	Total Allocated Costs	**$10,000,000.00**	
GEN-2011-050 Interconnection Costs			**$5,000,000.00**
See Oneline Diagram.			
	GEN-2011-050	$5,000,000.00	
	Total Allocated Costs	**$5,000,000.00**	
GEN-2011-051 Interconnection Costs			**$10,000,000.00**
See Oneline Diagram.			
	GEN-2011-051	$10,000,000.00	
	Total Allocated Costs	**$10,000,000.00**	
GEN-2011-054 Interconnection Costs			**$4,000,000.00**
See Oneline Diagram.			
	GEN-2011-054	$4,000,000.00	
	Total Allocated Costs	**$4,000,000.00**	
GEN-2011-055 Interconnection Costs			**$4,300,000.00**
See Oneline Diagram.			
	GEN-2011-055	$4,300,000.00	
	Total Allocated Costs	**$4,300,000.00**	

* Withdrawal of higher queued projects will cause a restudy and may result in higher costs

GEN-2011-056 Interconnection Costs		**$1.00**
See Oneline Diagram.		
	GEN-2011-056	$1.00
	Total Allocated Costs	**$1.00**
GEN-2011-057 Interconnection Costs		**$5,000,000.00**
See Oneline Diagram.		
	GEN-2011-057	$5,000,000.00
	Total Allocated Costs	**$5,000,000.00**
GEN-2011-058 Interconnection Costs		**$4,000,000.00**
See Oneline Diagram.		
	GEN-2011-058	$4,000,000.00
	Total Allocated Costs	**$4,000,000.00**
Grapevine - Stateline 230kV CKT 1		**$200,000.00**
NRIS only required upgrade: Replace terminal equipment		
	GEN-2011-049	$200,000.00
	Total Allocated Costs	**$200,000.00**
Hale County - TUCO 115kV CKT 1		**$3,500,000.00**
NRIS only required upgrade: Rebuild approximately 7 miles of 115kV from Hale County - Tuco		
	GEN-2011-045	$1,909,048.64
	GEN-2011-058	$1,590,951.36
	Total Allocated Costs	**$3,500,000.00**
Harbine - Beatrice 115kV CKT 1		**$7,700,000.00**
NRIS only required upgrade: Rebuild approximately 15 miles of 115kV line		
	GEN-2010-044	$7,700,000.00
	Total Allocated Costs	**$7,700,000.00**
Harbine - Crete 115kV CKT 1		**$16,100,000.00**
Build approximately 35 miles of 115kV from Harbine - Crete		
	GEN-2010-044	$16,100,000.00
	Total Allocated Costs	**$16,100,000.00**
Jones - Lubbock South 230kV CKT 2		**$200,000.00**
Replace Line Traps		
	GEN-2011-045	$136,391.66
	GEN-2011-058	$63,608.34

* Withdrawal of higher queued projects will cause a restudy and may result in higher costs

	Total Allocated Costs	**$200,000.00**

Jones - TUCO 230kV CKT 1 **$200,000.00**

Replace line traps

ASGI-2011-004	$3,567.15
GEN-2011-045	$86,307.93
GEN-2011-046	$2,075.15
GEN-2011-048	$27,471.86
GEN-2011-049	$6,750.14
GEN-2011-058	$73,827.77
Total Allocated Costs	**$200,000.00**

Knoll - Postrock 230kV CKT 1 **$1,000,000.00**

NRIS only required upgrade: Rebuild approximately 1 mile of 230kV @ 2000 amps

GEN-2010-061	$921,684.40
GEN-2011-044	$78,315.60
Total Allocated Costs	**$1,000,000.00**

Lubbock South - Lubbock East 115kV CKT 1 **$3,500,000.00**

NRIS only required upgrade: Rebuild approximately 7 miles of 115kV from Lubbock South - Lubbock East

GEN-2011-045	$1,204,010.30
GEN-2011-046	$42,206.67
GEN-2011-048	$681,625.96
GEN-2011-058	$1,572,157.08
Total Allocated Costs	**$3,500,000.00**

Lubbock South 230/115kV Autotransformer CKT 2 **$4,000,000.00**

NRIS only required upgrade: Install 2nd 230/115/13.2kV Autotransformer

GEN-2011-045	$2,452,497.55
GEN-2011-048	$446,716.51
GEN-2011-058	$1,100,785.93
Total Allocated Costs	**$4,000,000.00**

Nebraska City U Syracuse - SUB 970 CKT 1 **$20,000.00**

NRIS only required upgrade: Replace Terminal Equipment

GEN-2011-055	$20,000.00
Total Allocated Costs	**$20,000.00**

Knoll - North Hays - Vine Street 115kV CKT 1 **$4,500,000.00**

NRIS only required upgrade: Rebuild approximately 6 miles of 115kV line

* Withdrawal of higher queued projects will cause a restudy and may result in higher costs

	GEN-2010-061	$4,500,000.00
	Total Allocated Costs	**$4,500,000.00**

Potter - Tuco 345kV CKT 1 **$120,000,000.00**

Build approximately 105 miles of 345kV from Potter Co - Tuco

ASGI-2011-004	$3,031,035.25
GEN-2011-045	$46,732,214.12
GEN-2011-046	$2,418,726.79
GEN-2011-048	$24,403,882.38
GEN-2011-058	$43,414,141.46
Total Allocated Costs	**$120,000,000.00**

Smokey Hills - Summit 230kV CKT 1 **$32,000,000.00**

NRIS only required upgrade: Rebuild approximately 40 miles of 230kV

GEN-2010-061	$32,000,000.00
Total Allocated Costs	**$32,000,000.00**

SUB 967 - SUB 968 69kV CKT 1 **$16,000.00**

Replace terminal equipment

GEN-2011-055	$16,000.00
Total Allocated Costs	**$16,000.00**

SUB 968 - SUB 969 69kV CKT 1 **$0.00**

Mitigated by replacing terminal equipment at Sub 969

GEN-2011-055	$0.00
Total Allocated Costs	**$0.00**

SUB 969 - SUB 974 69kV CKT 1 **$0.00**

Mitigated by replacing terminal equipment at Sub 969

GEN-2011-055	$0.00
Total Allocated Costs	**$0.00**

TUCO 345/230kV Autotransformer CKT 3 **$10,000,000.00**

NRIS only required upgrade: Install 3rd 345/230/13.2kV Autotransformer

GEN-2011-045	$3,321,421.32
GEN-2011-046	$343,050.62
GEN-2011-048	$2,340,083.76
GEN-2011-049	$814,473.36
GEN-2011-058	$3,180,970.94

* Withdrawal of higher queued projects will cause a restudy and may result in higher costs

	Total Allocated Costs	**$10,000,000.00**

Viola - Rose Hill 345kV CKT 1 — $75,000,000.00

Build approximately 45 miles of 345kV from Viola - Rose Hill

GEN-2010-061	$2,807,757.17
GEN-2011-041	$32,436,762.23
GEN-2011-042	$32,436,762.23
GEN-2011-043	$3,659,359.19
GEN-2011-044	$3,659,359.19
Total Allocated Costs	**$75,000,000.00**

West Brock - SUB967 69kV CKT 1 — $0.00

Mitigated by replacing terminal equipment at Sub 967

GEN-2011-055	$0.00
Total Allocated Costs	**$0.00**

Wolfforth - Yuma 115kV CKT 1 — $3,000,000.00

NRIS only required upgrade: Rebuild approximately 6 miles of 115kV

GEN-2011-045	$450,441.77
GEN-2011-046	$106,412.51
GEN-2011-048	$1,606,274.46
GEN-2011-058	$836,871.26
Total Allocated Costs	**$3,000,000.00**

Woodward - Tatonga 345kV CKT 2 — $64,004,500.00

Build second circuit from Woodward - Tatonga 345kV

GEN-2010-061	$6,203,974.02
GEN-2011-043	$6,549,669.07
GEN-2011-044	$6,549,669.07
GEN-2011-049	$18,776,639.41
GEN-2011-051	$12,630,086.11
GEN-2011-054	$13,294,462.33
Total Allocated Costs	**$64,004,500.00**

Yoakum - Mustang 230kV CKT 1 — $200,000.00

Replace Line Traps

ASGI-2011-004	$612.21
GEN-2011-048	$99,387.79
Total Allocated Costs	**$1,600,000.00**

* Withdrawal of higher queued projects will cause a restudy and may result in higher costs

G: Power Flow Analysis (Constraints For Mitigation)

See next page.

SEASON	GROUP	SCENARIO	DIRECTION	SOURCE	MONITORED ELEMENT	RATE B (MVA)	TDF	(%MVA) LOADING	CONTINGENCY
12WP	0	0	'FROM->TO'	ASGI_2011_004	'TUCO INTERCHANGE (GE M1022338) 345/230/13.2KV TRANSFORMER CKT 1'	560	0.413	121.62	'TUCO INTERCHANGE (UPDATE DATA) 345/230/13.2KV TRANSFORMER CKT 2'
12WP	0	0	'FROM->TO'	ASGI_2011_004	'TUCO INTERCHANGE (GE M1022338) 345/230/13.2KV TRANSFORMER CKT 1'	560	0.413	121.40	'TUCO INTERCHANGE (UPDATE DATA) 345/230/13.2KV TRANSFORMER CKT 2'
13WP	0	0	'FROM->TO'	ASGI_2011_004	'TUCO INTERCHANGE (GE M1022338) 345/230/13.2KV TRANSFORMER CKT 1'	560	0.413	120.36	'TUCO INTERCHANGE (UPDATE DATA) 345/230/13.2KV TRANSFORMER CKT 2'
13WP	0	0	'FROM->TO'	ASGI_2011_004	'TUCO INTERCHANGE (GE M1022338) 345/230/13.2KV TRANSFORMER CKT 1'	560	0.413	120.04	'TUCO INTERCHANGE (UPDATE DATA) 345/230/13.2KV TRANSFORMER CKT 2'
12WP	0	0	'FROM->TO'	ASGI_2011_004	'TUCO INTERCHANGE (UPDATE DATA) 345/230/13.2KV TRANSFORMER CKT 2'	560	0.403	118.80	'TUCO INTERCHANGE (GE M1022338) 345/230/13.2KV TRANSFORMER CKT 1'
12WP	0	0	'FROM->TO'	ASGI_2011_004	'TUCO INTERCHANGE (UPDATE DATA) 345/230/13.2KV TRANSFORMER CKT 2'	560	0.403	118.70	'TUCO INTERCHANGE (GE M1022338) 345/230/13.2KV TRANSFORMER CKT 1'
13WP	0	0	'FROM->TO'	ASGI_2011_004	'TUCO INTERCHANGE (UPDATE DATA) 345/230/13.2KV TRANSFORMER CKT 2'	560	0.403	117.56	'TUCO INTERCHANGE (GE M1022338) 345/230/13.2KV TRANSFORMER CKT 1'
13WP	0	0	'FROM->TO'	ASGI_2011_004	'TUCO INTERCHANGE (UPDATE DATA) 345/230/13.2KV TRANSFORMER CKT 2'	560	0.403	117.39	'TUCO INTERCHANGE (GE M1022338) 345/230/13.2KV TRANSFORMER CKT 1'
12WP	0	0	'FROM->TO'	ASGI_2011_004	'JONES STATION - TUCO INTERCHANGE 230KV CKT 1'	361	0.224	102.83	'TOLK STATION EAST - TUCO INTERCHANGE 230KV CKT 1'
13WP	0	0	'FROM->TO'	ASGI_2011_004	'JONES STATION - TUCO INTERCHANGE 230KV CKT 1'	361	0.223	105.25	'TOLK STATION EAST - TUCO INTERCHANGE 230KV CKT 1'
12G	06ALL	0		ASGI_2011_004	NCONV-Iteration Limit	0	0.214	9999.00	'DBL-HTCH-BVR'
12G	06ALL	0		ASGI_2011_004	NCONV-Blown Up	559	0.163	85.38	'POTTER COUNTY INTERCHANGE (WAUK 90343-A) 345/230/13.2KV TRANSFORMER CKT 1'
12G	03ALL	0		ASGI_2011_004	NCONV-Iteration Limit	0	0.137	9999.00	'DBL-MATT-TAT'
12G	03ALL2	0		ASGI_2011_004	NCONV-Iteration Limit	0	0.137	9999.00	'DBL-MATT-TAT'
12G	03ALL	0		ASGI_2011_004	NCONV-Iteration Limit	0	0.130	9999.00	'DBL-WICH-THI'
12G	03ALL2	0		ASGI_2011_004	NCONV-Blown Up	0	0.130	9999.00	'DBL-WICH-THI'
12G	03ALL	0		ASGI_2011_004	NCONV-Iteration Limit	0	0.125	9999.00	'SPP-SWPS-03'
12G	03ALL2	0		ASGI_2011_004	NCONV-Iteration Limit	0	0.125	9999.00	'SPP-SWPS-03'
12G	03ALL	0		ASGI_2011_004	NCONV-Blown Up	0	0.055	9999.00	'DBL-CIR-RENO'
12G	03ALL2	0		ASGI_2011_004	NCONV-Blown Up	0	0.055	9999.00	'DBL-CIR-RENO'
12G	03ALL	0		ASGI_2011_004	NCONV-Iteration Limit	0	0.055	9999.00	'DBL-MULG-CIR'
12G	03ALL2	0		ASGI_2011_004	NCONV-Iteration Limit	0	0.055	9999.00	'DBL-MULG-CIR'
12G	03ALL	0		ASGI_2011_004	NCONV-Iteration Limit	0	0.055	9999.00	'DBL-SPRVL-MU'
12G	03ALL2	0		ASGI_2011_004	NCONV-Iteration Limit	0	0.055	9999.00	'DBL-SPRVL-MU'
12G	03ALL	0		ASGI_2011_004	NCONV-Iteration Limit	1792	0.042	47.07	'G11-17T 345.00 - POST ROCK 345KV CKT 1'
12G	06ALL	0		ASGI_2011_004	NCONV-Iteration Limit	0	0.036	9999.00	'SPP-AEPW-25'
12G	09BPSNR	0	'TO->FROM'	G10_044	'BEATRICE - HARBINE 115KV CKT 1'	99	0.774	114.07	'FAIRBURY - HARBINE 115KV CKT 1'
12G	09BPSNR	0	'TO->FROM'	G10_044	'BEATRICE - HARBINE 115KV CKT 1'	99	0.774	101.20	'FAIRBURY - NORTH HEBRON 115KV CKT 1'
12G	09NR	0	'TO->FROM'	G10_044	'BEATRICE - HARBINE 115KV CKT 1'	99	0.744	130.76	'LN-1175B'
12G	09NR	0	'TO->FROM'	G10_044	'BEATRICE - HARBINE 115KV CKT 1'	99	0.744	130.35	'FAIRBURY - HARBINE 115KV CKT 1'
12G	09NR	0	'TO->FROM'	G10_044	'BEATRICE - HARBINE 115KV CKT 1'	99	0.744	117.29	'FAIRBURY - NORTH HEBRON 115KV CKT 1'
12WP	00NR	0	'TO->FROM'	G10_044	'BEATRICE - HARBINE 115KV CKT 1'	99	0.744	143.68	'FAIRBURY - HARBINE 115KV CKT 1'
12WP	00NR	0	'TO->FROM'	G10_044	'BEATRICE - HARBINE 115KV CKT 1'	99	0.744	125.39	'FAIRBURY - NORTH HEBRON 115KV CKT 1'
12SP	00NR	0	'TO->FROM'	G10_044	'BEATRICE - HARBINE 115KV CKT 1'	99	0.744	132.84	'LN-1175B'
12SP	00NR	0	'TO->FROM'	G10_044	'BEATRICE - HARBINE 115KV CKT 1'	99	0.744	132.11	'FAIRBURY - HARBINE 115KV CKT 1'
12SP	00NR	0	'TO->FROM'	G10_044	'BEATRICE - HARBINE 115KV CKT 1'	99	0.744	110.89	'FAIRBURY - NORTH HEBRON 115KV CKT 1'
17WP	00NR	0	'TO->FROM'	G10_044	'BEATRICE - HARBINE 115KV CKT 1'	99	0.741	138.92	'LN-1175B'
17WP	00NR	0	'TO->FROM'	G10_044	'BEATRICE - HARBINE 115KV CKT 1'	99	0.741	138.27	'FAIRBURY - HARBINE 115KV CKT 1'
17WP	00NR	0	'TO->FROM'	G10_044	'BEATRICE - HARBINE 115KV CKT 1'	99	0.741	119.06	'FAIRBURY - NORTH HEBRON 115KV CKT 1'
17SP	00NR	0	'TO->FROM'	G10_044	'BEATRICE - HARBINE 115KV CKT 1'	99	0.741	130.66	'FAIRBURY - HARBINE 115KV CKT 1'
17SP	00NR	0	'TO->FROM'	G10_044	'BEATRICE - HARBINE 115KV CKT 1'	99	0.741	108.37	'FAIRBURY - NORTH HEBRON 115KV CKT 1'
13WP	00NR	0	'TO->FROM'	G10_044	'BEATRICE - HARBINE 115KV CKT 1'	99	0.741	142.33	'LN-1175B'
13WP	00NR	0	'TO->FROM'	G10_044	'BEATRICE - HARBINE 115KV CKT 1'	99	0.741	141.71	'FAIRBURY - HARBINE 115KV CKT 1'
13WP	00NR	0	'TO->FROM'	G10_044	'BEATRICE - HARBINE 115KV CKT 1'	99	0.741	123.27	'FAIRBURY - NORTH HEBRON 115KV CKT 1'
13SP	00NR	0	'TO->FROM'	G10_044	'BEATRICE - HARBINE 115KV CKT 1'	99	0.740	131.73	'LN-1175B'
13SP	00NR	0	'TO->FROM'	G10_044	'BEATRICE - HARBINE 115KV CKT 1'	99	0.740	130.94	'FAIRBURY - HARBINE 115KV CKT 1'
13SP	00NR	0	'TO->FROM'	G10_044	'BEATRICE - HARBINE 115KV CKT 1'	99	0.740	109.57	'FAIRBURY - NORTH HEBRON 115KV CKT 1'
12G	09BPSG10_044	0	'TO->FROM'	G10_044	'BEATRICE - HARBINE 115KV CKT 1'	99	0.734	105.33	'FAIRBURY - HARBINE 115KV CKT 1'
12G	09G10_044	0	'TO->FROM'	G10_044	'BEATRICE - HARBINE 115KV CKT 1'	99	0.733	122.27	'FAIRBURY - HARBINE 115KV CKT 1'
12G	09G10_044	0	'TO->FROM'	G10_044	'BEATRICE - HARBINE 115KV CKT 1'	99	0.733	109.01	'FAIRBURY - NORTH HEBRON 115KV CKT 1'
12G	9	0	'TO->FROM'	G10_044	'BEATRICE - HARBINE 115KV CKT 1'	99	0.732	107.84	'FAIRBURY - HARBINE 115KV CKT 1'
12G	09BPSNR	0	'TO->FROM'	G10_044	'BEATRICE - HARBINE 115KV CKT 1'	99	0.725	102.57	'KNOB HILL - STEELE CITY 115KV CKT 1'
12G	09G10_044	0	'TO->FROM'	G10_044	'BEATRICE - HARBINE 115KV CKT 1'	99	0.691	113.44	'KNOB HILL - STEELE CITY 115KV CKT 1'
12G	9	0	'TO->FROM'	G10_044	'BEATRICE - HARBINE 115KV CKT 1'	99	0.690	100.77	'KNOB HILL - STEELE CITY 115KV CKT 1'
12G	09NR	0	'TO->FROM'	G10_044	'BEATRICE - HARBINE 115KV CKT 1'	99	0.689	122.66	'KNOB HILL - STEELE CITY 115KV CKT 1'
17WP	00NR	0	'TO->FROM'	G10_044	'BEATRICE - HARBINE 115KV CKT 1'	99	0.687	114.73	'KNOB HILL - STEELE CITY 115KV CKT 1'
12WP	00NR	0	'TO->FROM'	G10_044	'BEATRICE - HARBINE 115KV CKT 1'	99	0.687	125.53	'KNOB HILL - STEELE CITY 115KV CKT 1'
13WP	00NR	0	'TO->FROM'	G10_044	'BEATRICE - HARBINE 115KV CKT 1'	99	0.687	124.06	'KNOB HILL - STEELE CITY 115KV CKT 1'
17SP	00NR	0	'TO->FROM'	G10_044	'BEATRICE - HARBINE 115KV CKT 1'	99	0.686	103.42	'KNOB HILL - STEELE CITY 115KV CKT 1'
12SP	00NR	0	'TO->FROM'	G10_044	'BEATRICE - HARBINE 115KV CKT 1'	99	0.686	116.63	'KNOB HILL - STEELE CITY 115KV CKT 1'
13SP	00NR	0	'TO->FROM'	G10_044	'BEATRICE - HARBINE 115KV CKT 1'	99	0.685	115.11	'KNOB HILL - STEELE CITY 115KV CKT 1'
12G	09NR	0	'TO->FROM'	G10_044	'BEATRICE - HARBINE 115KV CKT 1'	99	0.630	110.62	'CARLTON JUNCTION - NORTH HEBRON 115KV CKT 1'
12G	09NR	0	'TO->FROM'	G10_044	'BEATRICE - HARBINE 115KV CKT 1'	99	0.630	108.24	'CARLTON JUNCTION - GENEVA 115KV CKT 1'
12WP	00NR	0	'TO->FROM'	G10_044	'BEATRICE - HARBINE 115KV CKT 1'	99	0.629	121.43	'CARLTON JUNCTION - NORTH HEBRON 115KV CKT 1'
12SP	00NR	0	'TO->FROM'	G10_044	'BEATRICE - HARBINE 115KV CKT 1'	99	0.628	103.50	'CARLTON JUNCTION - NORTH HEBRON 115KV CKT 1'
17WP	00NR	0	'TO->FROM'	G10_044	'BEATRICE - HARBINE 115KV CKT 1'	99	0.626	115.47	'CARLTON JUNCTION - NORTH HEBRON 115KV CKT 1'
13WP	00NR	0	'TO->FROM'	G10_044	'BEATRICE - HARBINE 115KV CKT 1'	99	0.626	119.99	'CARLTON JUNCTION - NORTH HEBRON 115KV CKT 1'
13SP	00NR	0	'TO->FROM'	G10_044	'BEATRICE - HARBINE 115KV CKT 1'	99	0.625	102.59	'CARLTON JUNCTION - NORTH HEBRON 115KV CKT 1'
12G	09G10_044	0	'TO->FROM'	G10_044	'BEATRICE - HARBINE 115KV CKT 1'	99	0.621	103.85	'CARLTON JUNCTION - NORTH HEBRON 115KV CKT 1'
12G	09G10_044	0	'TO->FROM'	G10_044	'BEATRICE - HARBINE 115KV CKT 1'	99	0.621	101.47	'CARLTON JUNCTION - GENEVA 115KV CKT 1'
12G	09NR	0	'TO->FROM'	G10_044	'BEATRICE - HARBINE 115KV CKT 1'	99	0.600	122.25	'G09-40T 115.00 - SMITTYVILLE N.M. COOP (NEMAHA MARSHALL R.E. 115KV CKT 1'
12G	09NR	0	'TO->FROM'	G10_044	'BEATRICE - HARBINE 115KV CKT 1'	99	0.600	121.87	'BAILEYVILLE N.M. STATION (NEMAHA MARSHALL R - SMITTYVILLE N.M. COOP (NEMAHA MARSHALL R.E. 115KV CKT 1
12G	09NR	0	'TO->FROM'	G10_044	'BEATRICE - HARBINE 115KV CKT 1'	99	0.600	121.28	'BAILEYVILLE N.M. STATION (NEMAHA MARSHALL R - SOUTH SENECA 115KV CKT 1'
12G	09NR	0	'TO->FROM'	G10_044	'BEATRICE - HARBINE 115KV CKT 1'	99	0.600	110.46	'KELLY - SOUTH SENECA 115KV CKT 1'
12WP	00NR	0	'TO->FROM'	G10_044	'BEATRICE - HARBINE 115KV CKT 1'	99	0.599	127.49	'G09-40T 115.00 - SMITTYVILLE N.M. COOP (NEMAHA MARSHALL R.E. 115KV CKT 1'
12WP	00NR	0	'TO->FROM'	G10_044	'BEATRICE - HARBINE 115KV CKT 1'	99	0.599	127.14	'BAILEYVILLE N.M. STATION (NEMAHA MARSHALL R - SMITTYVILLE N.M. COOP (NEMAHA MARSHALL R.E. 115KV CKT 1
12WP	00NR	0	'TO->FROM'	G10_044	'BEATRICE - HARBINE 115KV CKT 1'	99	0.599	126.61	'BAILEYVILLE N.M. STATION (NEMAHA MARSHALL R - SOUTH SENECA 115KV CKT 1'
12WP	00NR	0	'TO->FROM'	G10_044	'BEATRICE - HARBINE 115KV CKT 1'	99	0.599	124.15	'G09-40T 115.00 - KNOB HILL 115KV CKT 1'

SEASON	GROUP	SCENARIO	DIRECTION	SOURCE	MONITORED ELEMENT	RATE B (MVA)	TDF	(%MVA) LOADING	CONTINGENCY
12SP	00NR	0	'TO->FROM'	G10_044	'BEATRICE - HARBINE 115KV CKT 1'	99	0.597	112.20	'G09-40T 115.00 - SMITTYVILLE N.M. COOP (NEMAHA MARSHALL R.E. 115KV CKT 1'
12SP	00NR	0	'TO->FROM'	G10_044	'BEATRICE - HARBINE 115KV CKT 1'	99	0.597	111.63	'BAILEYVILLE N.M. STATION (NEMAHA MARSHALL R - SMITTYVILLE N.M. COOP (NEMAHA MARSHALL R.E. 115KV CKT 1
12SP	00NR	0	'TO->FROM'	G10_044	'BEATRICE - HARBINE 115KV CKT 1'	99	0.597	110.76	'BAILEYVILLE N.M. STATION (NEMAHA MARSHALL R - SOUTH SENECA 115KV CKT 1'
12SP	00NR	0	'TO->FROM'	G10_044	'BEATRICE - HARBINE 115KV CKT 1'	99	0.597	108.96	'G09-40T 115.00 - KNOB HILL 115KV CKT 1'
12G	09G10_044	0	'TO->FROM'	G10_044	'BEATRICE - HARBINE 115KV CKT 1'	99	0.594	115.54	'G09-40T 115.00 - SMITTYVILLE N.M. COOP (NEMAHA MARSHALL R.E. 115KV CKT 1'
12G	09G10_044	0	'TO->FROM'	G10_044	'BEATRICE - HARBINE 115KV CKT 1'	99	0.594	115.15	'BAILEYVILLE N.M. STATION (NEMAHA MARSHALL R - SMITTYVILLE N.M. COOP (NEMAHA MARSHALL R.E. 115KV CKT 1
12G	09G10_044	0	'TO->FROM'	G10_044	'BEATRICE - HARBINE 115KV CKT 1'	99	0.594	114.58	'BAILEYVILLE N.M. STATION (NEMAHA MARSHALL R - SOUTH SENECA 115KV CKT 1'
12G	09G10_044	0	'TO->FROM'	G10_044	'BEATRICE - HARBINE 115KV CKT 1'	99	0.594	103.52	'KELLY - SOUTH SENECA 115KV CKT 1'
17WP	00NR	0	'TO->FROM'	G10_044	'BEATRICE - HARBINE 115KV CKT 1'	99	0.593	120.02	'G09-40T 115.00 - SMITTYVILLE N.M. COOP (NEMAHA MARSHALL R.E. 115KV CKT 1'
17WP	00NR	0	'TO->FROM'	G10_044	'BEATRICE - HARBINE 115KV CKT 1'	99	0.593	119.69	'BAILEYVILLE N.M. STATION (NEMAHA MARSHALL R - SMITTYVILLE N.M. COOP (NEMAHA MARSHALL R.E. 115KV CKT 1
17WP	00NR	0	'TO->FROM'	G10_044	'BEATRICE - HARBINE 115KV CKT 1'	99	0.593	119.19	'BAILEYVILLE N.M. STATION (NEMAHA MARSHALL R - SOUTH SENECA 115KV CKT 1'
17WP	00NR	0	'TO->FROM'	G10_044	'BEATRICE - HARBINE 115KV CKT 1'	99	0.593	116.85	'G09-40T 115.00 - KNOB HILL 115KV CKT 1'
12G	9	0	'TO->FROM'	G10_044	'BEATRICE - HARBINE 115KV CKT 1'	99	0.593	104.20	'G09-40T 115.00 - SMITTYVILLE N.M. COOP (NEMAHA MARSHALL R.E. 115KV CKT 1'
12G	9	0	'TO->FROM'	G10_044	'BEATRICE - HARBINE 115KV CKT 1'	99	0.593	103.82	'BAILEYVILLE N.M. STATION (NEMAHA MARSHALL R - SMITTYVILLE N.M. COOP (NEMAHA MARSHALL R.E. 115KV CKT 1
12G	9	0	'TO->FROM'	G10_044	'BEATRICE - HARBINE 115KV CKT 1'	99	0.593	103.23	'BAILEYVILLE N.M. STATION (NEMAHA MARSHALL R - SOUTH SENECA 115KV CKT 1'
13WP	00NR	0	'TO->FROM'	G10_044	'BEATRICE - HARBINE 115KV CKT 1'	99	0.593	126.54	'G09-40T 115.00 - SMITTYVILLE N.M. COOP (NEMAHA MARSHALL R.E. 115KV CKT 1'
13WP	00NR	0	'TO->FROM'	G10_044	'BEATRICE - HARBINE 115KV CKT 1'	99	0.593	126.22	'BAILEYVILLE N.M. STATION (NEMAHA MARSHALL R - SMITTYVILLE N.M. COOP (NEMAHA MARSHALL R.E. 115KV CKT 1
13WP	00NR	0	'TO->FROM'	G10_044	'BEATRICE - HARBINE 115KV CKT 1'	99	0.593	125.71	'BAILEYVILLE N.M. STATION (NEMAHA MARSHALL R - SOUTH SENECA 115KV CKT 1'
13WP	00NR	0	'TO->FROM'	G10_044	'BEATRICE - HARBINE 115KV CKT 1'	99	0.593	123.32	'G09-40T 115.00 - KNOB HILL 115KV CKT 1'
17SP	00NR	0	'TO->FROM'	G10_044	'BEATRICE - HARBINE 115KV CKT 1'	99	0.592	105.36	'G09-40T 115.00 - SMITTYVILLE N.M. COOP (NEMAHA MARSHALL R.E. 115KV CKT 1'
17SP	00NR	0	'TO->FROM'	G10_044	'BEATRICE - HARBINE 115KV CKT 1'	99	0.592	104.80	'BAILEYVILLE N.M. STATION (NEMAHA MARSHALL R - SMITTYVILLE N.M. COOP (NEMAHA MARSHALL R.E. 115KV CKT 1
17SP	00NR	0	'TO->FROM'	G10_044	'BEATRICE - HARBINE 115KV CKT 1'	99	0.592	103.93	'BAILEYVILLE N.M. STATION (NEMAHA MARSHALL R - SOUTH SENECA 115KV CKT 1'
17SP	00NR	0	'TO->FROM'	G10_044	'BEATRICE - HARBINE 115KV CKT 1'	99	0.592	102.23	'G09-40T 115.00 - KNOB HILL 115KV CKT 1'
13SP	00NR	0	'TO->FROM'	G10_044	'BEATRICE - HARBINE 115KV CKT 1'	99	0.591	111.71	'G09-40T 115.00 - SMITTYVILLE N.M. COOP (NEMAHA MARSHALL R.E. 115KV CKT 1'
13SP	00NR	0	'TO->FROM'	G10_044	'BEATRICE - HARBINE 115KV CKT 1'	99	0.591	111.17	'BAILEYVILLE N.M. STATION (NEMAHA MARSHALL R - SMITTYVILLE N.M. COOP (NEMAHA MARSHALL R.E. 115KV CKT 1
13SP	00NR	0	'TO->FROM'	G10_044	'BEATRICE - HARBINE 115KV CKT 1'	99	0.591	110.34	'BAILEYVILLE N.M. STATION (NEMAHA MARSHALL R - SOUTH SENECA 115KV CKT 1'
13SP	00NR	0	'TO->FROM'	G10_044	'BEATRICE - HARBINE 115KV CKT 1'	99	0.591	108.62	'G09-40T 115.00 - KNOB HILL 115KV CKT 1'
12G	09NR	0	'TO->FROM'	G10_044	'BEATRICE - HARBINE 115KV CKT 1'	99	0.579	107.64	'CLIFTON - CONCORDIA 115KV CKT 1'
12G	09NR	0	'TO->FROM'	G10_044	'BEATRICE - HARBINE 115KV CKT 1'	99	0.579	105.50	'GREENLEAF - KNOB HILL 115KV CKT 1'
12G	09NR	0	'TO->FROM'	G10_044	'BEATRICE - HARBINE 115KV CKT 1'	99	0.579	111.31	'G08-123N 115.00 - PAULINE 115KV CKT 1'
12WP	00NR	0	'TO->FROM'	G10_044	'BEATRICE - HARBINE 115KV CKT 1'	99	0.578	106.00	'CLIFTON - CONCORDIA 115KV CKT 1'
12WP	00NR	0	'TO->FROM'	G10_044	'BEATRICE - HARBINE 115KV CKT 1'	99	0.578	103.46	'GREENLEAF - KNOB HILL 115KV CKT 1'
12WP	00NR	0	'TO->FROM'	G10_044	'BEATRICE - HARBINE 115KV CKT 1'	99	0.578	101.35	'CLIFTON - GREENLEAF 115KV CKT 1'
13WP	00NR	0	'TO->FROM'	G10_044	'BEATRICE - HARBINE 115KV CKT 1'	99	0.578	103.77	'CLIFTON - CONCORDIA 115KV CKT 1'
13WP	00NR	0	'TO->FROM'	G10_044	'BEATRICE - HARBINE 115KV CKT 1'	99	0.578	101.40	'GREENLEAF - KNOB HILL 115KV CKT 1'
12WP	00NR	0	'TO->FROM'	G10_044	'BEATRICE - HARBINE 115KV CKT 1'	99	0.577	108.22	'HEBRON - SUPERIOR 115KV CKT 1'
12WP	00NR	0	'TO->FROM'	G10_044	'BEATRICE - HARBINE 115KV CKT 1'	99	0.577	107.02	'GUIDE ROCK - SUPERIOR 115KV CKT 1'
12WP	00NR	0	'TO->FROM'	G10_044	'BEATRICE - HARBINE 115KV CKT 1'	99	0.577	106.35	'G08-123N 115.00 - PAULINE 115KV CKT 1'
12WP	00NR	0	'TO->FROM'	G10_044	'BEATRICE - HARBINE 115KV CKT 1'	99	0.577	103.71	'G08-123N 115.00 - GUIDE ROCK 115KV CKT 1'
12SP	00NR	0	'TO->FROM'	G10_044	'BEATRICE - HARBINE 115KV CKT 1'	99	0.577	103.27	'CLIFTON - CONCORDIA 115KV CKT 1'
13SP	00NR	0	'TO->FROM'	G10_044	'BEATRICE - HARBINE 115KV CKT 1'	99	0.576	101.73	'CLIFTON - CONCORDIA 115KV CKT 1'
17WP	00NR	0	'TO->FROM'	G10_044	'BEATRICE - HARBINE 115KV CKT 1'	99	0.575	102.07	'HEBRON - SUPERIOR 115KV CKT 1'
17WP	00NR	0	'TO->FROM'	G10_044	'BEATRICE - HARBINE 115KV CKT 1'	99	0.575	100.79	'GUIDE ROCK - SUPERIOR 115KV CKT 1'
17WP	00NR	0	'TO->FROM'	G10_044	'BEATRICE - HARBINE 115KV CKT 1'	99	0.575	100.15	'G08-123N 115.00 - PAULINE 115KV CKT 1'
13WP	00NR	0	'TO->FROM'	G10_044	'BEATRICE - HARBINE 115KV CKT 1'	99	0.575	106.90	'HEBRON - SUPERIOR 115KV CKT 1'
13WP	00NR	0	'TO->FROM'	G10_044	'BEATRICE - HARBINE 115KV CKT 1'	99	0.575	105.56	'GUIDE ROCK - SUPERIOR 115KV CKT 1'
13WP	00NR	0	'TO->FROM'	G10_044	'BEATRICE - HARBINE 115KV CKT 1'	99	0.575	104.97	'G08-123N 115.00 - PAULINE 115KV CKT 1'
13WP	00NR	0	'TO->FROM'	G10_044	'BEATRICE - HARBINE 115KV CKT 1'	99	0.575	102.25	'G08-123N 115.00 - GUIDE ROCK 115KV CKT 1'
12G	09G10_044	0	'TO->FROM'	G10_044	'BEATRICE - HARBINE 115KV CKT 1'	99	0.575	101.13	'CLIFTON - CONCORDIA 115KV CKT 1'
12G	09G10_044	0	'TO->FROM'	G10_044	'BEATRICE - HARBINE 115KV CKT 1'	99	0.571	105.18	'G08-123N 115.00 - PAULINE 115KV CKT 1'
12WP	00NR	0	'TO->FROM'	G10_044	'FAIRBURY - HARBINE 115KV CKT 1'	99	0.569	103.67	'BEATRICE - HARBINE 115KV CKT 1'
17SP	00NR	0	'TO->FROM'	G10_044	'FAIRBURY - HARBINE 115KV CKT 1'	99	0.565	101.41	'BEATRICE - HARBINE 115KV CKT 1'
13WP	00NR	0	'TO->FROM'	G10_044	'FAIRBURY - HARBINE 115KV CKT 1'	99	0.564	101.60	'BEATRICE - HARBINE 115KV CKT 1'
17WP	00NR	0	'TO->FROM'	G10_044	'FAIRBURY - HARBINE 115KV CKT 1'	99	0.564	100.51	'BEATRICE - HARBINE 115KV CKT 1'
12G	09NR	0	'TO->FROM'	G10_044	'BEATRICE - HARBINE 115KV CKT 1'	99	0.562	107.32	'EAST MANHATTAN - ELM CREEK 230KV CKT 1'
12WP	00NR	0	'TO->FROM'	G10_044	'BEATRICE - HARBINE 115KV CKT 1'	99	0.560	120.24	'ELM CREEK - NORTHWEST MANHATTAN 230KV CKT 1'
12WP	00NR	0	'TO->FROM'	G10_044	'BEATRICE - HARBINE 115KV CKT 1'	99	0.560	108.19	'CONCORDIA (CONCORD6) 230/115/13.8KV TRANSFORMER CKT 1'
12WP	00NR	0	'TO->FROM'	G10_044	'BEATRICE - HARBINE 115KV CKT 1'	99	0.560	108.19	'CONCORDIA - ELM CREEK 230KV CKT 1'
17WP	00NR	0	'TO->FROM'	G10_044	'BEATRICE - HARBINE 115KV CKT 1'	99	0.559	113.70	'ELM CREEK - NORTHWEST MANHATTAN 230KV CKT 1'
17WP	00NR	0	'TO->FROM'	G10_044	'BEATRICE - HARBINE 115KV CKT 1'	99	0.559	100.64	'CONCORDIA (CONCORD6) 230/115/13.8KV TRANSFORMER CKT 1'
17WP	00NR	0	'TO->FROM'	G10_044	'BEATRICE - HARBINE 115KV CKT 1'	99	0.559	100.64	'CONCORDIA - ELM CREEK 230KV CKT 1'
12WP	00NR	0	'TO->FROM'	G10_044	'BEATRICE - HARBINE 115KV CKT 1'	99	0.559	107.18	'MCCOOL (MCCOOL T2) 345/115/13.8KV TRANSFORMER CKT 1'
13WP	00NR	0	'TO->FROM'	G10_044	'BEATRICE - HARBINE 115KV CKT 1'	99	0.559	119.54	'ELM CREEK - NORTHWEST MANHATTAN 230KV CKT 1'
13WP	00NR	0	'TO->FROM'	G10_044	'BEATRICE - HARBINE 115KV CKT 1'	99	0.559	106.62	'CONCORDIA (CONCORD6) 230/115/13.8KV TRANSFORMER CKT 1'
13WP	00NR	0	'TO->FROM'	G10_044	'BEATRICE - HARBINE 115KV CKT 1'	99	0.559	106.62	'CONCORDIA - ELM CREEK 230KV CKT 1'
12SP	00NR	0	'TO->FROM'	G10_044	'BEATRICE - HARBINE 115KV CKT 1'	99	0.559	100.00	'ELM CREEK - NORTHWEST MANHATTAN 230KV CKT 1'
12G	09NR	0	'TO->FROM'	G10_044	'BEATRICE - HARBINE 115KV CKT 1'	99	0.559	109.56	'HUMBOLDT - S1399 5 161KV CKT 1'
17WP	00NR	0	'TO->FROM'	G10_044	'BEATRICE - HARBINE 115KV CKT 1'	99	0.557	100.63	'MCCOOL (MCCOOL T2) 345/115/13.8KV TRANSFORMER CKT 1'
13WP	00NR	0	'TO->FROM'	G10_044	'BEATRICE - HARBINE 115KV CKT 1'	99	0.556	106.08	'MCCOOL (MCCOOL T2) 345/115/13.8KV TRANSFORMER CKT 1'
12WP	00NR	0	'TO->FROM'	G10_044	'BEATRICE - HARBINE 115KV CKT 1'	99	0.556	119.60	'HUMBOLDT - S1399 5 161KV CKT 1'
12WP	00NR	0	'TO->FROM'	G10_044	'BEATRICE - HARBINE 115KV CKT 1'	99	0.556	116.37	'G07-15T 161.00 - S1399 5 161KV CKT 1'
12G	09NR	0	'TO->FROM'	G10_044	'BEATRICE - HARBINE 115KV CKT 1'	99	0.556	95.00	'EAST MANHATTAN - JEFFREY ENERGY CENTER 230KV CKT 1'
12G	09G10_044	0	'TO->FROM'	G10_044	'BEATRICE - HARBINE 115KV CKT 1'	99	0.555	101.33	'EAST MANHATTAN - ELM CREEK 230KV CKT 1'
12G	09NR	0	'TO->FROM'	G10_044	'BEATRICE - HARBINE 115KV CKT 1'	99	0.555	106.01	'HOYT - STRANGER CREEK 345KV CKT 1'
12G	09NR	0	'TO->FROM'	G10_044	'BEATRICE - HARBINE 115KV CKT 1'	99	0.555	104.26	'MCCOOL - MOORE 345KV CKT 1'
12G	09NR	0	'TO->FROM'	G10_044	'BEATRICE - HARBINE 115KV CKT 1'	99	0.555	104.01	'EAST MANHATTAN (EMANHT3X) 230/115/18.0KV TRANSFORMER CKT 1'
12G	09NR	0	'TO->FROM'	G10_044	'BEATRICE - HARBINE 115KV CKT 1'	99	0.554	104.34	'WRTOD400'
12G	09NR	0	'TO->FROM'	G10_044	'BEATRICE - HARBINE 115KV CKT 1'	99	0.554	104.27	'HOYT - JEFFREY ENERGY CENTER 345KV CKT 1'

SEASON	GROUP	SCENARIO	DIRECTION	SOURCE	MONITORED ELEMENT	RATE B (MVA)	TDF	(%MVA) LOADING	CONTINGENCY
12G	09NR	0	'TO->FROM'	G10_044	'BEATRICE - HARBINE 115KV CKT 1'	99	0.554	107.37	'GEN640009 1-COOPER NUCLEAR STATION'
12G	09NR	0	'TO->FROM'	G10_044	'BEATRICE - HARBINE 115KV CKT 1'	99	0.554	107.20	'GEN645012 2-NEBRASKA CITY 2'
12G	09NR	0	'TO->FROM'	G10_044	'BEATRICE - HARBINE 115KV CKT 1'	99	0.554	106.18	'GEN645011 1-NEBRASKA CITY 1'
12G	09NR	0	'TO->FROM'	G10_044	'BEATRICE - HARBINE 115KV CKT 1'	99	0.554	105.59	'GEN645001 1-FORT CALHOUN 1'
12G	09NR	0	'TO->FROM'	G10_044	'BEATRICE - HARBINE 115KV CKT 1'	99	0.554	104.69	'GEN640020 2-SHELDON STATION UNIT 2'
12G	09NR	0	'TO->FROM'	G10_044	'BEATRICE - HARBINE 115KV CKT 1'	99	0.554	104.67	'GEN560623 1-ASGI-10-01 0.6000'
12G	09NR	0	'TO->FROM'	G10_044	'BEATRICE - HARBINE 115KV CKT 1'	99	0.554	104.03	'GEN336821 1-GRAND GULF UNIT'
12G	09NR	0	'TO->FROM'	G10_044	'BEATRICE - HARBINE 115KV CKT 1'	99	0.554	100.71	'BASE CASE'
12G	09NR	0	'TO->FROM'	G10_044	'BEATRICE - HARBINE 115KV CKT 1'	99	0.554	100.71	'NC1_GEN-NEBRASKA CITY 1'
17WP	00NR	0	'TO->FROM'	G10_044	'BEATRICE - HARBINE 115KV CKT 1'	99	0.554	114.36	'HUMBOLDT - S1399 5 161KV CKT 1'
17WP	00NR	0	'TO->FROM'	G10_044	'BEATRICE - HARBINE 115KV CKT 1'	99	0.554	111.18	'G07-15T 161.00 - S1399 5 161KV CKT 1'
12G	09NR	0	'TO->FROM'	G10_044	'BEATRICE - HARBINE 115KV CKT 1'	99	0.554	104.35	'MOORE - PAULINE 345KV CKT 1'
13WP	00NR	0	'TO->FROM'	G10_044	'BEATRICE - HARBINE 115KV CKT 1'	99	0.554	118.35	'HUMBOLDT - S1399 5 161KV CKT 1'
13WP	00NR	0	'TO->FROM'	G10_044	'BEATRICE - HARBINE 115KV CKT 1'	99	0.554	115.19	'G07-15T 161.00 - S1399 5 161KV CKT 1'
12WP	00NR	0	'TO->FROM'	G10_044	'BEATRICE - HARBINE 115KV CKT 1'	99	0.554	108.67	'EAST MANHATTAN - JEFFREY ENERGY CENTER 230KV CKT 1'
17WP	00NR	0	'TO->FROM'	G10_044	'BEATRICE - HARBINE 115KV CKT 1'	99	0.553	103.39	'ENERGY CENTER - SUTTON 115KV CKT 1'
12WP	00NR	0	'TO->FROM'	G10_044	'BEATRICE - HARBINE 115KV CKT 1'	99	0.553	119.20	'HOYT - STRANGER CREEK 345KV CKT 1'
12WP	00NR	0	'TO->FROM'	G10_044	'BEATRICE - HARBINE 115KV CKT 1'	99	0.553	116.10	'FRIEND - GENEVA 115KV CKT 1'
12WP	00NR	0	'TO->FROM'	G10_044	'BEATRICE - HARBINE 115KV CKT 1'	99	0.553	115.51	'CRETE - FRIEND 115KV CKT 1'
17WP	00NR	0	'TO->FROM'	G10_044	'BEATRICE - HARBINE 115KV CKT 1'	99	0.553	103.42	'PAULINE (PAULINE T1) 345/115/13.8KV TRANSFORMER CKT 1'
13WP	00NR	0	'TO->FROM'	G10_044	'BEATRICE - HARBINE 115KV CKT 1'	99	0.553	108.12	'ENERGY CENTER - SUTTON 115KV CKT 1'
12WP	00NR	0	'TO->FROM'	G10_044	'BEATRICE - HARBINE 115KV CKT 1'	99	0.553	115.60	'SWISSVALE - WEST GARDNER 345KV CKT 1'
12WP	00NR	0	'TO->FROM'	G10_044	'BEATRICE - HARBINE 115KV CKT 1'	99	0.553	116.36	'HOYT - JEFFREY ENERGY CENTER 345KV CKT 1'
12WP	00NR	0	'TO->FROM'	G10_044	'BEATRICE - HARBINE 115KV CKT 1'	99	0.553	120.01	'GEN640009 1-COOPER NUCLEAR STATION'
12WP	00NR	0	'TO->FROM'	G10_044	'BEATRICE - HARBINE 115KV CKT 1'	99	0.553	116.00	'GEN640020 2-SHELDON STATION UNIT 2'
12WP	00NR	0	'TO->FROM'	G10_044	'BEATRICE - HARBINE 115KV CKT 1'	99	0.553	115.93	'GEN560623 1-ASGI-10-01 0.6000'
12WP	00NR	0	'TO->FROM'	G10_044	'BEATRICE - HARBINE 115KV CKT 1'	99	0.553	115.66	'GEN640019 1-SHELDON STATION UNIT 1'
12WP	00NR	0	'TO->FROM'	G10_044	'BEATRICE - HARBINE 115KV CKT 1'	99	0.553	112.36	'BASE CASE'
12SP	00NR	0	'TO->FROM'	G10_044	'BEATRICE - HARBINE 115KV CKT 1'	99	0.552	103.08	'HOYT - STRANGER CREEK 345KV CKT 1'
12WP	00NR	0	'TO->FROM'	G10_044	'BEATRICE - HARBINE 115KV CKT 1'	99	0.552	120.50	'MCCOOL - MOORE 345KV CKT 1'
13WP	00NR	0	'TO->FROM'	G10_044	'BEATRICE - HARBINE 115KV CKT 1'	99	0.552	108.14	'PHILLIPSBURG - SMITH CENTER 115KV CKT 1'
12SP	00NR	0	'TO->FROM'	G10_044	'BEATRICE - HARBINE 115KV CKT 1'	99	0.551	100.53	'HOYT - JEFFREY ENERGY CENTER 345KV CKT 1'
12SP	00NR	0	'TO->FROM'	G10_044	'BEATRICE - HARBINE 115KV CKT 1'	99	0.551	100.66	'WRTOD400'
17WP	00NR	0	'TO->FROM'	G10_044	'BEATRICE - HARBINE 115KV CKT 1'	99	0.551	113.47	'HOYT - STRANGER CREEK 345KV CKT 1'
17WP	00NR	0	'TO->FROM'	G10_044	'BEATRICE - HARBINE 115KV CKT 1'	99	0.551	110.00	'FRIEND - GENEVA 115KV CKT 1'
17WP	00NR	0	'TO->FROM'	G10_044	'BEATRICE - HARBINE 115KV CKT 1'	99	0.551	109.98	'LN-FRIEND'
17WP	00NR	0	'TO->FROM'	G10_044	'BEATRICE - HARBINE 115KV CKT 1'	99	0.551	103.06	'EAST MANHATTAN - JEFFREY ENERGY CENTER 230KV CKT 1'
12WP	00NR	0	'TO->FROM'	G10_044	'BEATRICE - HARBINE 115KV CKT 1'	99	0.551	122.91	'MOORE - PAULINE 345KV CKT 1'
17WP	00NR	0	'TO->FROM'	G10_044	'BEATRICE - HARBINE 115KV CKT 1'	99	0.551	110.02	'SWISSVALE - WEST GARDNER 345KV CKT 1'
17WP	00NR	0	'TO->FROM'	G10_044	'BEATRICE - HARBINE 115KV CKT 1'	99	0.551	109.59	'AXTELL - POST ROCK 345KV CKT 1'
13WP	00NR	0	'TO->FROM'	G10_044	'BEATRICE - HARBINE 115KV CKT 1'	99	0.551	118.15	'HOYT - STRANGER CREEK 345KV CKT 1'
17WP	00NR	0	'TO->FROM'	G10_044	'BEATRICE - HARBINE 115KV CKT 1'	99	0.551	111.02	'WRTOD400'
17WP	00NR	0	'TO->FROM'	G10_044	'BEATRICE - HARBINE 115KV CKT 1'	99	0.551	110.84	'HOYT - JEFFREY ENERGY CENTER 345KV CKT 1'
17WP	00NR	0	'TO->FROM'	G10_044	'BEATRICE - HARBINE 115KV CKT 1'	99	0.551	109.95	'GEN560623 1-ASGI-10-01 0.6000'
17WP	00NR	0	'TO->FROM'	G10_044	'BEATRICE - HARBINE 115KV CKT 1'	99	0.551	106.47	'BASE CASE'
17WP	00NR	0	'TO->FROM'	G10_044	'BEATRICE - HARBINE 115KV CKT 1'	99	0.551	103.29	'GEN532651 1-JEFFREY ENERGY CENTER UNIT 1'
13WP	00NR	0	'TO->FROM'	G10_044	'BEATRICE - HARBINE 115KV CKT 1'	99	0.551	115.09	'FRIEND - GENEVA 115KV CKT 1'
13WP	00NR	0	'TO->FROM'	G10_044	'BEATRICE - HARBINE 115KV CKT 1'	99	0.551	115.09	'LN-FRIEND'
13WP	00NR	0	'TO->FROM'	G10_044	'BEATRICE - HARBINE 115KV CKT 1'	99	0.551	114.49	'CRETE - FRIEND 115KV CKT 1'
13WP	00NR	0	'TO->FROM'	G10_044	'BEATRICE - HARBINE 115KV CKT 1'	99	0.551	114.71	'SWISSVALE - WEST GARDNER 345KV CKT 1'
13WP	00NR	0	'TO->FROM'	G10_044	'BEATRICE - HARBINE 115KV CKT 1'	99	0.550	114.57	'AXTELL - POST ROCK 345KV CKT 1'
13WP	00NR	0	'TO->FROM'	G10_044	'BEATRICE - HARBINE 115KV CKT 1'	99	0.550	115.62	'WRTOD400'
13WP	00NR	0	'TO->FROM'	G10_044	'BEATRICE - HARBINE 115KV CKT 1'	99	0.550	115.44	'HOYT - JEFFREY ENERGY CENTER 345KV CKT 1'
13WP	00NR	0	'TO->FROM'	G10_044	'BEATRICE - HARBINE 115KV CKT 1'	99	0.550	111.23	'BASE CASE'
17WP	00NR	0	'TO->FROM'	G10_044	'BEATRICE - HARBINE 115KV CKT 1'	99	0.550	113.53	'MCCOOL - MOORE 345KV CKT 1'
12SP	00NR	0	'TO->FROM'	G10_044	'BEATRICE - HARBINE 115KV CKT 1'	99	0.550	101.85	'MCCOOL - MOORE 345KV CKT 1'
17WP	00NR	0	'TO->FROM'	G10_044	'BEATRICE - HARBINE 115KV CKT 1'	99	0.550	116.58	'MOORE - PAULINE 345KV CKT 1'
12SP	00NR	0	'TO->FROM'	G10_044	'BEATRICE - HARBINE 115KV CKT 1'	99	0.550	103.88	'MOORE - PAULINE 345KV CKT 1'
13SP	00NR	0	'TO->FROM'	G10_044	'BEATRICE - HARBINE 115KV CKT 1'	99	0.550	102.50	'HOYT - STRANGER CREEK 345KV CKT 1'
13WP	00NR	0	'TO->FROM'	G10_044	'BEATRICE - HARBINE 115KV CKT 1'	99	0.549	119.65	'MCCOOL - MOORE 345KV CKT 1'
13SP	00NR	0	'TO->FROM'	G10_044	'BEATRICE - HARBINE 115KV CKT 1'	99	0.549	100.15	'HOYT - JEFFREY ENERGY CENTER 345KV CKT 1'
13SP	00NR	0	'TO->FROM'	G10_044	'BEATRICE - HARBINE 115KV CKT 1'	99	0.549	100.33	'WRTOD400'
12WP	00NR	0	'TO->FROM'	G10_044	'BEATRICE - HARBINE 115KV CKT 1'	99	0.549	109.04	'SHELDON - SW7TH & PLEASANT HILL 115KV CKT 1'
13WP	00NR	0	'TO->FROM'	G10_044	'BEATRICE - HARBINE 115KV CKT 1'	99	0.549	122.02	'MOORE - PAULINE 345KV CKT 1'
13SP	00NR	0	'TO->FROM'	G10_044	'BEATRICE - HARBINE 115KV CKT 1'	99	0.547	101.64	'MCCOOL - MOORE 345KV CKT 1'
17WP	00NR	0	'TO->FROM'	G10_044	'BEATRICE - HARBINE 115KV CKT 1'	99	0.547	103.19	'SHELDON - SW7TH & PLEASANT HILL 115KV CKT 1'
13SP	00NR	0	'TO->FROM'	G10_044	'BEATRICE - HARBINE 115KV CKT 1'	99	0.547	103.59	'MOORE - PAULINE 345KV CKT 1'
12G	09G10_044	0	'TO->FROM'	G10_044	'BEATRICE - HARBINE 115KV CKT 1'	99	0.547	98.30	'EAST MANHATTAN (EMANHT3X) 230/115/18.0KV TRANSFORMER CKT 1'
13WP	00NR	0	'TO->FROM'	G10_044	'BEATRICE - HARBINE 115KV CKT 1'	99	0.547	107.88	'SHELDON - SW7TH & PLEASANT HILL 115KV CKT 1'
12G	09G10_044	0	'TO->FROM'	G10_044	'BEATRICE - HARBINE 115KV CKT 1'	99	0.547	100.27	'HOYT - STRANGER CREEK 345KV CKT 1'
12G	09G10_044	0	'TO->FROM'	G10_044	'BEATRICE - HARBINE 115KV CKT 1'	99	0.546	103.90	'HUMBOLDT - S1399 5 161KV CKT 1'
12WP	00NR	0	'TO->FROM'	G10_044	'BEATRICE - HARBINE 115KV CKT 1'	99	0.529	115.48	'MOORE (MOORE T1) 345/115/13.8KV TRANSFORMER CKT 1'
12SP	00NR	0	'TO->FROM'	G10_044	'BEATRICE - HARBINE 115KV CKT 1'	99	0.528	100.00	'MOORE (MOORE T1) 345/115/13.8KV TRANSFORMER CKT 1'
17WP	00NR	0	'TO->FROM'	G10_044	'BEATRICE - HARBINE 115KV CKT 1'	99	0.527	110.45	'MOORE (MOORE T1) 345/115/13.8KV TRANSFORMER CKT 1'
13WP	00NR	0	'TO->FROM'	G10_044	'BEATRICE - HARBINE 115KV CKT 1'	99	0.527	114.70	'MOORE (MOORE T1) 345/115/13.8KV TRANSFORMER CKT 1'
12WP	00NR	0	'TO->FROM'	G10_044	'BEATRICE - HARBINE 115KV CKT 1'	99	0.514	108.91	'CLATONIA - SHELDON 115KV CKT 1'
12WP	00NR	0	'TO->FROM'	G10_044	'BEATRICE - HARBINE 115KV CKT 1'	99	0.514	108.08	'BEATRICE POWER STATION - CLATONIA 115KV CKT 1'
17WP	00NR	0	'TO->FROM'	G10_044	'BEATRICE - HARBINE 115KV CKT 1'	99	0.513	103.34	'CLATONIA - SHELDON 115KV CKT 1'

SEASON	GROUP	SCENARIO	DIRECTION	SOURCE	MONITORED ELEMENT	RATE B (MVA)	TDF	(%MVA) LOADING	CONTINGENCY
17WP	00NR	0	'TO->FROM'	G10_044	'BEATRICE - HARBINE 115KV CKT 1'	99	0.513	102.40	'LN-CLATONIA'
17WP	00NR	0	'TO->FROM'	G10_044	'BEATRICE - HARBINE 115KV CKT 1'	99	0.513	102.40	'BEATRICE POWER STATION - CLATONIA 115KV CKT 1'
13WP	00NR	0	'TO->FROM'	G10_044	'BEATRICE - HARBINE 115KV CKT 1'	99	0.512	107.92	'CLATONIA - SHELDON 115KV CKT 1'
13WP	00NR	0	'TO->FROM'	G10_044	'BEATRICE - HARBINE 115KV CKT 1'	99	0.512	107.08	'BEATRICE POWER STATION - CLATONIA 115KV CKT 1'
13WP	00NR	0	'TO->FROM'	G10_044	'BEATRICE - HARBINE 115KV CKT 1'	99	0.512	107.08	'LN-CLATONIA'
12WP	00NR	0	'TO->FROM'	G10_044	'BEATRICE - HARBINE 115KV CKT 1'	99	0.494	106.23	'BEATRICE POWER STATION - SHELDON 115KV CKT 1'
17WP	00NR	0	'TO->FROM'	G10_044	'BEATRICE - HARBINE 115KV CKT 1'	99	0.492	100.74	'BEATRICE POWER STATION - SHELDON 115KV CKT 1'
13WP	00NR	0	'TO->FROM'	G10_044	'BEATRICE - HARBINE 115KV CKT 1'	99	0.492	105.31	'BEATRICE POWER STATION - SHELDON 115KV CKT 1'
12G	09BPSG10_044	0	'FROM->TO'	G10_044	'BEATRICE POWER STATION - CLATONIA 115KV CKT 1'	137	0.340	112.05	'BEATRICE POWER STATION - SHELDON 115KV CKT 1'
12G	09BPS	0	'FROM->TO'	G10_044	'BEATRICE POWER STATION - CLATONIA 115KV CKT 1'	137	0.340	107.74	'BEATRICE POWER STATION - SHELDON 115KV CKT 1'
12G	09BPSG10_044	0	'FROM->TO'	G10_044	'CLATONIA - SHELDON 115KV CKT 1'	137	0.340	107.63	'BEATRICE POWER STATION - SHELDON 115KV CKT 1'
12G	09BPS	0	'FROM->TO'	G10_044	'CLATONIA - SHELDON 115KV CKT 1'	137	0.340	103.33	'BEATRICE POWER STATION - SHELDON 115KV CKT 1'
12G	09BPSNR	0	'FROM->TO'	G10_044	'BEATRICE POWER STATION - CLATONIA 115KV CKT 1'	137	0.199	115.09	'BEATRICE POWER STATION - SHELDON 115KV CKT 1'
12G	09BPSNR	0	'FROM->TO'	G10_044	'CLATONIA - SHELDON 115KV CKT 1'	137	0.199	110.68	'BEATRICE POWER STATION - SHELDON 115KV CKT 1'
12G	09NR	0	'FROM->TO'	G10_044	'SHELDON - SW7TH & PLEASANT HILL 115KV CKT 2'	43	0.144	135.08	'MOORE (MOORE T1) 345/115/13.8KV TRANSFORMER CKT 1'
12SP	00NR	0	'FROM->TO'	G10_044	'SHELDON - SW7TH & PLEASANT HILL 115KV CKT 2'	43	0.142	123.73	'MOORE (MOORE T1) 345/115/13.8KV TRANSFORMER CKT 1'
13SP	00NR	0	'FROM->TO'	G10_044	'SHELDON - SW7TH & PLEASANT HILL 115KV CKT 2'	43	0.142	122.12	'MOORE (MOORE T1) 345/115/13.8KV TRANSFORMER CKT 1'
17SP	00NR	0	'FROM->TO'	G10_044	'SHELDON - SW7TH & PLEASANT HILL 115KV CKT 2'	43	0.141	120.79	'MOORE (MOORE T1) 345/115/13.8KV TRANSFORMER CKT 1'
12G	09NR	0	'FROM->TO'	G10_044	'SHELDON - SW7TH & PLEASANT HILL 115KV CKT 2'	43	0.111	233.82	'SHELDON - SW7TH & PLEASANT HILL 115KV CKT 1'
12WP	00NR	0	'FROM->TO'	G10_044	'SHELDON - SW7TH & PLEASANT HILL 115KV CKT 2'	105	0.109	113.20	'SHELDON - SW7TH & PLEASANT HILL 115KV CKT 1'
12SP	00NR	0	'FROM->TO'	G10_044	'SHELDON - SW7TH & PLEASANT HILL 115KV CKT 2'	43	0.108	272.10	'SHELDON - SW7TH & PLEASANT HILL 115KV CKT 1'
13WP	00NR	0	'FROM->TO'	G10_044	'SHELDON - SW7TH & PLEASANT HILL 115KV CKT 2'	105	0.108	113.53	'SHELDON - SW7TH & PLEASANT HILL 115KV CKT 1'
17WP	00NR	0	'FROM->TO'	G10_044	'SHELDON - SW7TH & PLEASANT HILL 115KV CKT 2'	105	0.108	111.69	'SHELDON - SW7TH & PLEASANT HILL 115KV CKT 1'
13SP	00NR	0	'FROM->TO'	G10_044	'SHELDON - SW7TH & PLEASANT HILL 115KV CKT 2'	43	0.108	271.07	'SHELDON - SW7TH & PLEASANT HILL 115KV CKT 1'
17SP	00NR	0	'FROM->TO'	G10_044	'SHELDON - SW7TH & PLEASANT HILL 115KV CKT 2'	43	0.108	271.30	'SHELDON - SW7TH & PLEASANT HILL 115KV CKT 1'
12SP	00NR	0	'FROM->TO'	G10_044	'SHELDON - SW7TH & PLEASANT HILL 115KV CKT 2'	43	0.088	182.74	'FAIRBURY - HARBINE 115KV CKT 1'
13SP	00NR	0	'FROM->TO'	G10_044	'SHELDON - SW7TH & PLEASANT HILL 115KV CKT 2'	43	0.087	182.04	'FAIRBURY - HARBINE 115KV CKT 1'
17SP	00NR	0	'FROM->TO'	G10_044	'SHELDON - SW7TH & PLEASANT HILL 115KV CKT 2'	43	0.087	183.19	'FAIRBURY - HARBINE 115KV CKT 1'
12SP	00NR	0	'FROM->TO'	G10_044	'SHELDON - SW7TH & PLEASANT HILL 115KV CKT 2'	43	0.086	180.43	'KNOB HILL - STEELE CITY 115KV CKT 1'
17SP	00NR	0	'FROM->TO'	G10_044	'SHELDON - SW7TH & PLEASANT HILL 115KV CKT 2'	43	0.086	167.19	'HARBINE - STEELE CITY 115KV CKT 1'
12G	09NR	0	'FROM->TO'	G10_044	'SHELDON - SW7TH & PLEASANT HILL 115KV CKT 2'	43	0.074	159.58	'103RD & ROKEBY - MOORE 345KV CKT 1'
12G	09NR	0	'FROM->TO'	G10_044	'SHELDON - SW7TH & PLEASANT HILL 115KV CKT 2'	43	0.073	168.09	'MOORE - NW68TH & HOLDREGE 345KV CKT 1'
12G	09NR	0	'FROM->TO'	G10_044	'SHELDON - SW7TH & PLEASANT HILL 115KV CKT 2'	43	0.073	157.98	'ENRONTAP'
12G	09NR	0	'FROM->TO'	G10_044	'SHELDON - SW7TH & PLEASANT HILL 115KV CKT 2'	43	0.073	157.98	'HYDROCARBON TAP - SUB 974 69KV CKT 1'
12G	09NR	0	'FROM->TO'	G10_044	'SHELDON - SW7TH & PLEASANT HILL 115KV CKT 2'	43	0.073	157.98	'HYDROCARBON TAP - SUB 970 69KV CKT 1'
17SP	00NR	0	'FROM->TO'	G10_044	'SHELDON - SW7TH & PLEASANT HILL 115KV CKT 2'	43	0.073	167.19	'COOPER - SUB 1280 161KV CKT 1'
12SP	00NR	0	'FROM->TO'	G10_044	'SHELDON - SW7TH & PLEASANT HILL 115KV CKT 2'	43	0.072	183.67	'FIRTH - SHELDON 115KV CKT 1'
13SP	00NR	0	'FROM->TO'	G10_044	'SHELDON - SW7TH & PLEASANT HILL 115KV CKT 2'	43	0.072	183.00	'FIRTH - SHELDON 115KV CKT 1'
12SP	00NR	0	'FROM->TO'	G10_044	'SHELDON - SW7TH & PLEASANT HILL 115KV CKT 2'	43	0.072	187.84	'103RD & ROKEBY - MOORE 345KV CKT 1'
12G	09NR	0	'FROM->TO'	G10_044	'SHELDON - SW7TH & PLEASANT HILL 115KV CKT 2'	43	0.072	159.93	'GEN645001 1-FORT CALHOUN 1'
12G	09NR	0	'FROM->TO'	G10_044	'SHELDON - SW7TH & PLEASANT HILL 115KV CKT 2'	43	0.072	158.05	'KELLY - MADISONCO 230.00 230KV CKT 1'
12G	09NR	0	'FROM->TO'	G10_044	'SHELDON - SW7TH & PLEASANT HILL 115KV CKT 2'	43	0.072	151.11	'BASE CASE'
12G	09NR	0	'FROM->TO'	G10_044	'SHELDON - SW7TH & PLEASANT HILL 115KV CKT 2'	43	0.072	144.26	'LN-STOCKVILL'
12G	09NR	0	'FROM->TO'	G10_044	'SHELDON - SW7TH & PLEASANT HILL 115KV CKT 2'	43	0.072	144.23	'LN-1094'
12G	09NR	0	'FROM->TO'	G10_044	'SHELDON - SW7TH & PLEASANT HILL 115KV CKT 2'	43	0.072	144.08	'NEB02WAPAB2'
12G	09NR	0	'FROM->TO'	G10_044	'SHELDON - SW7TH & PLEASANT HILL 115KV CKT 2'	43	0.072	143.51	'LN-WAPA4'
12G	09NR	0	'FROM->TO'	G10_044	'SHELDON - SW7TH & PLEASANT HILL 115KV CKT 2'	43	0.072	141.67	'GEN562029 1-G11_018_3 0.6900'
12G	09NR	0	'FROM->TO'	G10_044	'SHELDON - SW7TH & PLEASANT HILL 115KV CKT 2'	43	0.072	136.52	'GEN560711 1-G10_044_3 0.6900'
12G	09NR	0	'FROM->TO'	G10_044	'SHELDON - SW7TH & PLEASANT HILL 115KV CKT 2'	43	0.072	133.98	'GEN640019 1-SHELDON STATION UNIT 1'
12G	09NR	0	'FROM->TO'	G10_044	'SHELDON - SW7TH & PLEASANT HILL 115KV CKT 2'	43	0.072	125.87	'GEN640020 2-SHELDON STATION UNIT 2'
17SP	00NR	0	'FROM->TO'	G10_044	'SHELDON - SW7TH & PLEASANT HILL 115KV CKT 2'	43	0.071	183.41	'FIRTH - SHELDON 115KV CKT 1'
13SP	00NR	0	'FROM->TO'	G10_044	'SHELDON - SW7TH & PLEASANT HILL 115KV CKT 2'	43	0.071	188.36	'103RD & ROKEBY - MOORE 345KV CKT 1'
17SP	00NR	0	'FROM->TO'	G10_044	'SHELDON - SW7TH & PLEASANT HILL 115KV CKT 2'	43	0.071	186.29	'103RD & ROKEBY - MOORE 345KV CKT 1'
12SP	00NR	0	'FROM->TO'	G10_044	'SHELDON - SW7TH & PLEASANT HILL 115KV CKT 2'	43	0.071	181.63	'MCCOOL - YORK SOUTHWEST 115KV CKT 1'
12SP	00NR	0	'FROM->TO'	G10_044	'SHELDON - SW7TH & PLEASANT HILL 115KV CKT 2'	43	0.071	184.00	'ENRONTAP'
12SP	00NR	0	'FROM->TO'	G10_044	'SHELDON - SW7TH & PLEASANT HILL 115KV CKT 2'	43	0.071	184.00	'HYDROCARBON TAP - SUB 974 69KV CKT 1'
12SP	00NR	0	'FROM->TO'	G10_044	'SHELDON - SW7TH & PLEASANT HILL 115KV CKT 2'	43	0.071	184.00	'HYDROCARBON TAP - SUB 970 69KV CKT 1'
12SP	00NR	0	'FROM->TO'	G10_044	'SHELDON - SW7TH & PLEASANT HILL 115KV CKT 2'	43	0.071	182.52	'NEB CITY U SYR SUB - SUB 970 69KV CKT 1'
12G	09NR	0	'FROM->TO'	G10_044	'SHELDON - SW7TH & PLEASANT HILL 115KV CKT 2'	43	0.071	173.72	'103RD & ROKEBY - WAGENER 345KV CKT 1'
12SP	00NR	0	'FROM->TO'	G10_044	'SHELDON - SW7TH & PLEASANT HILL 115KV CKT 2'	43	0.071	203.09	'MOORE - NW68TH & HOLDREGE 345KV CKT 1'
13SP	00NR	0	'FROM->TO'	G10_044	'SHELDON - SW7TH & PLEASANT HILL 115KV CKT 2'	43	0.071	183.36	'ENRONTAP'
13SP	00NR	0	'FROM->TO'	G10_044	'SHELDON - SW7TH & PLEASANT HILL 115KV CKT 2'	43	0.071	183.36	'HYDROCARBON TAP - SUB 974 69KV CKT 1'
13SP	00NR	0	'FROM->TO'	G10_044	'SHELDON - SW7TH & PLEASANT HILL 115KV CKT 2'	43	0.071	183.35	'HYDROCARBON TAP - SUB 970 69KV CKT 1'
13SP	00NR	0	'FROM->TO'	G10_044	'SHELDON - SW7TH & PLEASANT HILL 115KV CKT 2'	43	0.071	181.88	'NEB CITY U SYR SUB - SUB 970 69KV CKT 1'
13SP	00NR	0	'FROM->TO'	G10_044	'SHELDON - SW7TH & PLEASANT HILL 115KV CKT 2'	43	0.071	180.98	'NEB CITY U SYR SUB - SUB 971 69KV CKT 1'
13SP	00NR	0	'FROM->TO'	G10_044	'SHELDON - SW7TH & PLEASANT HILL 115KV CKT 2'	43	0.070	203.04	'MOORE - NW68TH & HOLDREGE 345KV CKT 1'
17SP	00NR	0	'FROM->TO'	G10_044	'SHELDON - SW7TH & PLEASANT HILL 115KV CKT 2'	43	0.070	184.15	'HYDROCARBON TAP - SUB 974 69KV CKT 1'
17SP	00NR	0	'FROM->TO'	G10_044	'SHELDON - SW7TH & PLEASANT HILL 115KV CKT 2'	43	0.070	184.14	'HYDROCARBON TAP - SUB 970 69KV CKT 1'
17SP	00NR	0	'FROM->TO'	G10_044	'SHELDON - SW7TH & PLEASANT HILL 115KV CKT 2'	43	0.070	182.53	'NEB CITY U SYR SUB - SUB 970 69KV CKT 1'
17SP	00NR	0	'FROM->TO'	G10_044	'SHELDON - SW7TH & PLEASANT HILL 115KV CKT 2'	43	0.070	181.58	'NEB CITY U SYR SUB - SUB 971 69KV CKT 1'
12SP	00NR	0	'FROM->TO'	G10_044	'SHELDON - SW7TH & PLEASANT HILL 115KV CKT 2'	43	0.070	184.52	'CRETE - SHELDON 115KV CKT 1'
12SP	00NR	0	'FROM->TO'	G10_044	'SHELDON - SW7TH & PLEASANT HILL 115KV CKT 2'	43	0.070	180.21	'HOYT - STRANGER CREEK 345KV CKT 1'
17SP	00NR	0	'FROM->TO'	G10_044	'SHELDON - SW7TH & PLEASANT HILL 115KV CKT 2'	43	0.070	205.73	'MOORE - NW68TH & HOLDREGE 345KV CKT 1'
12SP	00NR	0	'FROM->TO'	G10_044	'SHELDON - SW7TH & PLEASANT HILL 115KV CKT 2'	43	0.070	167.71	'LN-1147'
12SP	00NR	0	'FROM->TO'	G10_044	'SHELDON - SW7TH & PLEASANT HILL 115KV CKT 2'	43	0.070	192.16	'LES0001'
12SP	00NR	0	'FROM->TO'	G10_044	'SHELDON - SW7TH & PLEASANT HILL 115KV CKT 2'	43	0.070	174.90	'BASE CASE'
12SP	00NR	0	'FROM->TO'	G10_044	'SHELDON - SW7TH & PLEASANT HILL 115KV CKT 2'	43	0.070	167.67	'LN-TSGT6'
12SP	00NR	0	'FROM->TO'	G10_044	'SHELDON - SW7TH & PLEASANT HILL 115KV CKT 2'	43	0.070	166.02	'LN-1142'

SEASON	GROUP	SCENARIO	DIRECTION	SOURCE	MONITORED ELEMENT	RATE B (MVA)	TDF	(%MVA) LOADING	CONTINGENCY
12SP	00NR	0	'FROM->TO'	G10_044	'SHELDON - SW7TH & PLEASANT HILL 115KV CKT 2'	43	0.070	165.51	'LN-STOCKVILL'
12SP	00NR	0	'FROM->TO'	G10_044	'SHELDON - SW7TH & PLEASANT HILL 115KV CKT 2'	43	0.070	161.19	'LN-WAPA4'
12SP	00NR	0	'FROM->TO'	G10_044	'SHELDON - SW7TH & PLEASANT HILL 115KV CKT 2'	43	0.070	167.34	'LN-CALLAWAY'
12SP	00NR	0	'FROM->TO'	G10_044	'SHELDON - SW7TH & PLEASANT HILL 115KV CKT 2'	43	0.070	167.05	'NEB02WAPAB2'
12SP	00NR	0	'FROM->TO'	G10_044	'SHELDON - SW7TH & PLEASANT HILL 115KV CKT 2'	43	0.070	160.42	'LN-WAPA2'
12SP	00NR	0	'FROM->TO'	G10_044	'SHELDON - SW7TH & PLEASANT HILL 115KV CKT 2'	43	0.070	166.19	'LN-1163'
12SP	00NR	0	'FROM->TO'	G10_044	'SHELDON - SW7TH & PLEASANT HILL 115KV CKT 2'	43	0.070	165.66	'LN-S-CREEK'
12SP	00NR	0	'FROM->TO'	G10_044	'SHELDON - SW7TH & PLEASANT HILL 115KV CKT 2'	43	0.070	181.88	'STEGALL - WAYSIDE 230KV CKT 1'
12G	09NR	0	'FROM->TO'	G10_044	'SHELDON - SW7TH & PLEASANT HILL 115KV CKT 2'	43	0.070	162.54	'84TH & LEIGHTON - WAGENER 115KV CKT 1'
13SP	00NR	0	'FROM->TO'	G10_044	'SHELDON - SW7TH & PLEASANT HILL 115KV CKT 2'	43	0.070	184.49	'CRETE - SHELDON 115KV CKT 1'
12SP	00NR	0	'FROM->TO'	G10_044	'SHELDON - SW7TH & PLEASANT HILL 115KV CKT 2'	43	0.070	182.79	'ATCHSNT3 345.00 - BOONEVILLE 345KV CKT 1'
12SP	00NR	0	'FROM->TO'	G10_044	'SHELDON - SW7TH & PLEASANT HILL 115KV CKT 2'	43	0.070	182.28	'ATCHSNT3 345.00 - COOPER 345KV CKT 1'
17SP	00NR	0	'FROM->TO'	G10_044	'SHELDON - SW7TH & PLEASANT HILL 115KV CKT 2'	43	0.070	185.16	'CRETE - SHELDON 115KV CKT 1'
13SP	00NR	0	'FROM->TO'	G10_044	'SHELDON - SW7TH & PLEASANT HILL 115KV CKT 2'	43	0.070	191.40	'LES0001'
13SP	00NR	0	'FROM->TO'	G10_044	'SHELDON - SW7TH & PLEASANT HILL 115KV CKT 2'	43	0.070	174.30	'BASE CASE'
13SP	00NR	0	'FROM->TO'	G10_044	'SHELDON - SW7TH & PLEASANT HILL 115KV CKT 2'	43	0.070	167.50	'LN-MALONEY'
13SP	00NR	0	'FROM->TO'	G10_044	'SHELDON - SW7TH & PLEASANT HILL 115KV CKT 2'	43	0.070	167.32	'LN-1142'
13SP	00NR	0	'FROM->TO'	G10_044	'SHELDON - SW7TH & PLEASANT HILL 115KV CKT 2'	43	0.070	167.16	'LN-TSGT6'
13SP	00NR	0	'FROM->TO'	G10_044	'SHELDON - SW7TH & PLEASANT HILL 115KV CKT 2'	43	0.070	164.59	'LN-STOCKVILL'
13SP	00NR	0	'FROM->TO'	G10_044	'SHELDON - SW7TH & PLEASANT HILL 115KV CKT 2'	43	0.070	160.22	'LN-WAPA4'
13SP	00NR	0	'FROM->TO'	G10_044	'SHELDON - SW7TH & PLEASANT HILL 115KV CKT 2'	43	0.070	166.29	'LN-CALLAWAY'
13SP	00NR	0	'FROM->TO'	G10_044	'SHELDON - SW7TH & PLEASANT HILL 115KV CKT 2'	43	0.070	159.35	'LN-WAPA2'
13SP	00NR	0	'FROM->TO'	G10_044	'SHELDON - SW7TH & PLEASANT HILL 115KV CKT 2'	43	0.070	165.38	'LN-1163'
13SP	00NR	0	'FROM->TO'	G10_044	'SHELDON - SW7TH & PLEASANT HILL 115KV CKT 2'	43	0.070	164.33	'LN-S-CREEK'
13SP	00NR	0	'FROM->TO'	G10_044	'SHELDON - SW7TH & PLEASANT HILL 115KV CKT 2'	43	0.070	181.33	'STEGALL - WAYSIDE 230KV CKT 1'
13SP	00NR	0	'FROM->TO'	G10_044	'SHELDON - SW7TH & PLEASANT HILL 115KV CKT 2'	43	0.070	182.06	'ATCHSNT3 345.00 - BOONEVILLE 345KV CKT 1'
13SP	00NR	0	'FROM->TO'	G10_044	'SHELDON - SW7TH & PLEASANT HILL 115KV CKT 2'	43	0.070	181.54	'ATCHSNT3 345.00 - COOPER 345KV CKT 1'
17SP	00NR	0	'FROM->TO'	G10_044	'SHELDON - SW7TH & PLEASANT HILL 115KV CKT 2'	43	0.069	174.42	'BASE CASE'
17SP	00NR	0	'FROM->TO'	G10_044	'SHELDON - SW7TH & PLEASANT HILL 115KV CKT 2'	43	0.069	165.53	'NEB02WAPAB2'
12G	09NR	0	'FROM->TO'	G10_044	'SHELDON - SW7TH & PLEASANT HILL 115KV CKT 2'	43	0.069	165.68	'WAGENER (T852) 345/115/13.8KV TRANSFORMER CKT 2'
12SP	00NR	0	'FROM->TO'	G10_044	'SHELDON - SW7TH & PLEASANT HILL 115KV CKT 2'	43	0.069	183.40	'1281LINBUS'
12SP	00NR	0	'FROM->TO'	G10_044	'SHELDON - SW7TH & PLEASANT HILL 115KV CKT 2'	43	0.069	183.39	'SUB 1281 - SUB 1287 161KV CKT 1'
17SP	00NR	0	'FROM->TO'	G10_044	'SHELDON - SW7TH & PLEASANT HILL 115KV CKT 2'	43	0.069	183.30	'ATCHSNT3 345.00 - BOONEVILLE 345KV CKT 1'
17SP	00NR	0	'FROM->TO'	G10_044	'SHELDON - SW7TH & PLEASANT HILL 115KV CKT 2'	43	0.069	182.72	'ATCHSNT3 345.00 - COOPER 345KV CKT 1'
12SP	00NR	0	'FROM->TO'	G10_044	'SHELDON - SW7TH & PLEASANT HILL 115KV CKT 2'	43	0.069	206.36	'103RD & ROKEBY - WAGENER 345KV CKT 1'
13SP	00NR	0	'FROM->TO'	G10_044	'SHELDON - SW7TH & PLEASANT HILL 115KV CKT 2'	43	0.069	181.43	'NW68TH & HOLDREGE - SW27TH & F 115KV CKT 1'
12G	09NR	0	'FROM->TO'	G10_044	'SHELDON - SW7TH & PLEASANT HILL 115KV CKT 2'	43	0.069	167.00	'WAGENER (T851) 345/115/13.8KV TRANSFORMER CKT 1'
13SP	00NR	0	'FROM->TO'	G10_044	'SHELDON - SW7TH & PLEASANT HILL 115KV CKT 2'	43	0.069	182.43	'1281LINBUS'
13SP	00NR	0	'FROM->TO'	G10_044	'SHELDON - SW7TH & PLEASANT HILL 115KV CKT 2'	43	0.069	182.43	'SUB 1281 - SUB 1287 161KV CKT 1'
17SP	00NR	0	'FROM->TO'	G10_044	'SHELDON - SW7TH & PLEASANT HILL 115KV CKT 2'	43	0.069	181.48	'NW68TH & HOLDREGE - SW27TH & F 115KV CKT 1'
13SP	00NR	0	'FROM->TO'	G10_044	'SHELDON - SW7TH & PLEASANT HILL 115KV CKT 2'	43	0.069	206.10	'103RD & ROKEBY - WAGENER 345KV CKT 1'
12SP	00NR	0	'FROM->TO'	G10_044	'SHELDON - SW7TH & PLEASANT HILL 115KV CKT 2'	43	0.069	182.16	'81ST & OLD CHENEY - WAGENER 115KV CKT 1'
12SP	00NR	0	'FROM->TO'	G10_044	'SHELDON - SW7TH & PLEASANT HILL 115KV CKT 2'	43	0.069	167.74	'27TH & PINE LAKE - ROKEBY 115KV CKT 1'
17SP	00NR	0	'FROM->TO'	G10_044	'SHELDON - SW7TH & PLEASANT HILL 115KV CKT 2'	43	0.069	182.89	'SUB 1281 - SUB 1287 161KV CKT 1'
17SP	00NR	0	'FROM->TO'	G10_044	'SHELDON - SW7TH & PLEASANT HILL 115KV CKT 2'	43	0.069	210.53	'103RD & ROKEBY - WAGENER 345KV CKT 1'
13SP	00NR	0	'FROM->TO'	G10_044	'SHELDON - SW7TH & PLEASANT HILL 115KV CKT 2'	43	0.068	181.47	'81ST & OLD CHENEY - WAGENER 115KV CKT 1'
12SP	00NR	0	'FROM->TO'	G10_044	'SHELDON - SW7TH & PLEASANT HILL 115KV CKT 2'	43	0.068	191.19	'84TH & LEIGHTON - WAGENER 115KV CKT 1'
13SP	00NR	0	'FROM->TO'	G10_044	'SHELDON - SW7TH & PLEASANT HILL 115KV CKT 2'	43	0.068	166.92	'27TH & PINE LAKE - ROKEBY 115KV CKT 1'
17SP	00NR	0	'FROM->TO'	G10_044	'SHELDON - SW7TH & PLEASANT HILL 115KV CKT 2'	43	0.068	181.63	'81ST & OLD CHENEY - WAGENER 115KV CKT 1'
13SP	00NR	0	'FROM->TO'	G10_044	'SHELDON - SW7TH & PLEASANT HILL 115KV CKT 2'	43	0.068	190.32	'84TH & LEIGHTON - WAGENER 115KV CKT 1'
17SP	00NR	0	'FROM->TO'	G10_044	'SHELDON - SW7TH & PLEASANT HILL 115KV CKT 2'	43	0.068	166.05	'27TH & PINE LAKE - ROKEBY 115KV CKT 1'
12SP	00NR	0	'FROM->TO'	G10_044	'SHELDON - SW7TH & PLEASANT HILL 115KV CKT 2'	43	0.068	194.07	'WAGENER (T852) 345/115/13.8KV TRANSFORMER CKT 2'
17SP	00NR	0	'FROM->TO'	G10_044	'SHELDON - SW7TH & PLEASANT HILL 115KV CKT 2'	43	0.068	190.67	'84TH & LEIGHTON - WAGENER 115KV CKT 1'
12SP	00NR	0	'FROM->TO'	G10_044	'SHELDON - SW7TH & PLEASANT HILL 115KV CKT 2'	43	0.068	195.83	'WAGENER (T851) 345/115/13.8KV TRANSFORMER CKT 1'
13SP	00NR	0	'FROM->TO'	G10_044	'SHELDON - SW7TH & PLEASANT HILL 115KV CKT 2'	43	0.067	193.32	'WAGENER (T852) 345/115/13.8KV TRANSFORMER CKT 2'
13SP	00NR	0	'FROM->TO'	G10_044	'SHELDON - SW7TH & PLEASANT HILL 115KV CKT 2'	43	0.067	195.06	'WAGENER (T851) 345/115/13.8KV TRANSFORMER CKT 1'
17SP	00NR	0	'FROM->TO'	G10_044	'SHELDON - SW7TH & PLEASANT HILL 115KV CKT 2'	43	0.067	194.51	'WAGENER (T852) 345/115/13.8KV TRANSFORMER CKT 2'
17SP	00NR	0	'FROM->TO'	G10_044	'SHELDON - SW7TH & PLEASANT HILL 115KV CKT 2'	43	0.067	196.34	'WAGENER (T851) 345/115/13.8KV TRANSFORMER CKT 1'
12G	09NR	0	'FROM->TO'	G10_044	'SHELDON - SW7TH & PLEASANT HILL 115KV CKT 2'	43	0.066	184.40	'NW68TH & HOLDREGE (T141) 345/115/13.8KV TRANSFORMER CKT 1'
12G	09NR	0	'FROM->TO'	G10_044	'SHELDON - SW7TH & PLEASANT HILL 115KV CKT 2'	43	0.065	144.03	'ROKEBY - SW7TH & PLEASANT HILL 115KV CKT 1'
12SP	00NR	0	'FROM->TO'	G10_044	'SHELDON - SW7TH & PLEASANT HILL 115KV CKT 2'	43	0.064	219.11	'NW68TH & HOLDREGE (T141) 345/115/13.8KV TRANSFORMER CKT 1'
13SP	00NR	0	'FROM->TO'	G10_044	'SHELDON - SW7TH & PLEASANT HILL 115KV CKT 2'	43	0.064	218.41	'NW68TH & HOLDREGE (T141) 345/115/13.8KV TRANSFORMER CKT 1'
17SP	00NR	0	'FROM->TO'	G10_044	'SHELDON - SW7TH & PLEASANT HILL 115KV CKT 2'	43	0.064	219.69	'NW68TH & HOLDREGE (T141) 345/115/13.8KV TRANSFORMER CKT 1'
12G	09NR	0	'FROM->TO'	G10_044	'SHELDON - SW7TH & PLEASANT HILL 115KV CKT 2'	43	0.060	119.60	'20TH & PIONEERS - SW7TH & PLEASANT HILL 115KV CKT 1'
12SP	00NR	0	'FROM->TO'	G10_044	'SHELDON - SW7TH & PLEASANT HILL 115KV CKT 2'	43	0.059	133.18	'20TH & PIONEERS - SW7TH & PLEASANT HILL 115KV CKT 1'
13SP	00NR	0	'FROM->TO'	G10_044	'SHELDON - SW7TH & PLEASANT HILL 115KV CKT 2'	43	0.058	132.08	'20TH & PIONEERS - SW7TH & PLEASANT HILL 115KV CKT 1'
17SP	00NR	0	'FROM->TO'	G10_044	'SHELDON - SW7TH & PLEASANT HILL 115KV CKT 2'	43	0.058	129.15	'20TH & PIONEERS - SW7TH & PLEASANT HILL 115KV CKT 1'
12G	03ALL	0		G10_044	NCONV-Blown Up	0	0.052	9999.00	'DBL-THIS-CLR'
12G	03ALL2	0		G10_044	NCONV-Blown Up	0	0.052	9999.00	'DBL-THIS-CLR'
12G	03ALL	0		G10_044	NCONV-Iteration Limit	0	0.037	9999.00	'DBL-MATT-TAT'
12G	03ALL2	0		G10_044	NCONV-Iteration Limit	0	0.037	9999.00	'DBL-MATT-TAT'
12G	09NR	2	'TO->FROM'	G10_044	'BEATRICE - HARBINE 115KV CKT 1'	99	0.554	100.43	'CRETE - HARBINE 115KV CKT 1'
12WP	00NR	2	'TO->FROM'	G10_044	'BEATRICE - HARBINE 115KV CKT 1'	99	0.553	112.76	'CRETE - HARBINE 115KV CKT 1'
17WP	00NR	2	'TO->FROM'	G10_044	'BEATRICE - HARBINE 115KV CKT 1'	99	0.551	106.85	'CRETE - HARBINE 115KV CKT 1'
13WP	00NR	2	'TO->FROM'	G10_044	'BEATRICE - HARBINE 115KV CKT 1'	99	0.550	111.58	'CRETE - HARBINE 115KV CKT 1'
12G	09NR	2	'FROM->TO'	G10_044	'SHELDON - SW7TH & PLEASANT HILL 115KV CKT 2'	43	0.166	142.30	'MOORE (MOORE T1) 345/115/13.8KV TRANSFORMER CKT 1'
12SP	00NR	2	'FROM->TO'	G10_044	'SHELDON - SW7TH & PLEASANT HILL 115KV CKT 2'	43	0.164	132.29	'MOORE (MOORE T1) 345/115/13.8KV TRANSFORMER CKT 1'
13SP	00NR	2	'FROM->TO'	G10_044	'SHELDON - SW7TH & PLEASANT HILL 115KV CKT 2'	43	0.164	130.76	'MOORE (MOORE T1) 345/115/13.8KV TRANSFORMER CKT 1'

SEASON	GROUP	SCENARIO	DIRECTION	SOURCE	MONITORED ELEMENT	RATE B (MVA)	TDF	(%MVA) LOADING	CONTINGENCY
17SP	00NR	2	'FROM->TO'	G10_044	'SHELDON - SW7TH & PLEASANT HILL 115KV CKT 2'	43	0.163	129.45	'MOORE (MOORE T1) 345/115/13.8KV TRANSFORMER CKT 1'
12G	09NR	2	'FROM->TO'	G10_044	'SHELDON - SW7TH & PLEASANT HILL 115KV CKT 2'	43	0.128	238.24	'SHELDON - SW7TH & PLEASANT HILL 115KV CKT 1'
12WP	00NR	2	'FROM->TO'	G10_044	'SHELDON - SW7TH & PLEASANT HILL 115KV CKT 2'	105	0.126	115.89	'SHELDON - SW7TH & PLEASANT HILL 115KV CKT 1'
12SP	00NR	2	'FROM->TO'	G10_044	'SHELDON - SW7TH & PLEASANT HILL 115KV CKT 2'	43	0.126	277.59	'SHELDON - SW7TH & PLEASANT HILL 115KV CKT 1'
13WP	00NR	2	'FROM->TO'	G10_044	'SHELDON - SW7TH & PLEASANT HILL 115KV CKT 2'	105	0.125	116.17	'SHELDON - SW7TH & PLEASANT HILL 115KV CKT 1'
17WP	00NR	2	'FROM->TO'	G10_044	'SHELDON - SW7TH & PLEASANT HILL 115KV CKT 2'	105	0.125	114.34	'SHELDON - SW7TH & PLEASANT HILL 115KV CKT 1'
13SP	00NR	2	'FROM->TO'	G10_044	'SHELDON - SW7TH & PLEASANT HILL 115KV CKT 2'	43	0.125	276.76	'SHELDON - SW7TH & PLEASANT HILL 115KV CKT 1'
17SP	00NR	2	'FROM->TO'	G10_044	'SHELDON - SW7TH & PLEASANT HILL 115KV CKT 2'	43	0.125	276.99	'SHELDON - SW7TH & PLEASANT HILL 115KV CKT 1'
12G	09NR	2	'FROM->TO'	G10_044	'SHELDON - SW7TH & PLEASANT HILL 115KV CKT 2'	43	0.096	145.11	'HARBINE - STEELE CITY 115KV CKT 1'
12SP	00NR	2	'FROM->TO'	G10_044	'SHELDON - SW7TH & PLEASANT HILL 115KV CKT 2'	43	0.095	185.57	'FAIRBURY - HARBINE 115KV CKT 1'
17SP	00NR	2	'FROM->TO'	G10_044	'SHELDON - SW7TH & PLEASANT HILL 115KV CKT 2'	43	0.094	186.22	'FAIRBURY - HARBINE 115KV CKT 1'
12SP	00NR	2	'FROM->TO'	G10_044	'SHELDON - SW7TH & PLEASANT HILL 115KV CKT 2'	43	0.094	169.58	'HARBINE - STEELE CITY 115KV CKT 1'
13SP	00NR	2	'FROM->TO'	G10_044	'SHELDON - SW7TH & PLEASANT HILL 115KV CKT 2'	43	0.094	169.05	'HARBINE - STEELE CITY 115KV CKT 1'
17SP	00NR	2	'FROM->TO'	G10_044	'SHELDON - SW7TH & PLEASANT HILL 115KV CKT 2'	43	0.094	168.81	'HARBINE - STEELE CITY 115KV CKT 1'
12G	09NR	2	'FROM->TO'	G10_044	'SHELDON - SW7TH & PLEASANT HILL 115KV CKT 2'	43	0.086	162.36	'103RD & ROKEBY - MOORE 345KV CKT 1'
12SP	00NR	2	'FROM->TO'	G10_044	'SHELDON - SW7TH & PLEASANT HILL 115KV CKT 2'	43	0.084	173.69	'CLIFTON - GREENLEAF 115KV CKT 1'
12G	09NR	2	'FROM->TO'	G10_044	'SHELDON - SW7TH & PLEASANT HILL 115KV CKT 2'	43	0.084	170.93	'MOORE - NW68TH & HOLDREGE 345KV CKT 1'
12G	09NR	2	'FROM->TO'	G10_044	'SHELDON - SW7TH & PLEASANT HILL 115KV CKT 2'	43	0.084	160.96	'HYDROCARBON TAP - SUB 974 69KV CKT 1'
12G	09NR	2	'FROM->TO'	G10_044	'SHELDON - SW7TH & PLEASANT HILL 115KV CKT 2'	43	0.084	160.95	'HYDROCARBON TAP - SUB 970 69KV CKT 1'
12SP	00NR	2	'FROM->TO'	G10_044	'SHELDON - SW7TH & PLEASANT HILL 115KV CKT 2'	43	0.084	171.58	'COOPER - SUB 1280 161KV CKT 1'
12SP	00NR	2	'FROM->TO'	G10_044	'SHELDON - SW7TH & PLEASANT HILL 115KV CKT 2'	43	0.084	187.44	'FIRTH - SHELDON 115KV CKT 1'
13SP	00NR	2	'FROM->TO'	G10_044	'SHELDON - SW7TH & PLEASANT HILL 115KV CKT 2'	43	0.083	171.43	'COOPER - SUB 1280 161KV CKT 1'
13SP	00NR	2	'FROM->TO'	G10_044	'SHELDON - SW7TH & PLEASANT HILL 115KV CKT 2'	43	0.083	186.88	'FIRTH - SHELDON 115KV CKT 1'
17SP	00NR	2	'FROM->TO'	G10_044	'SHELDON - SW7TH & PLEASANT HILL 115KV CKT 2'	43	0.083	170.64	'COOPER - SUB 1280 161KV CKT 1'
17SP	00NR	2	'FROM->TO'	G10_044	'SHELDON - SW7TH & PLEASANT HILL 115KV CKT 2'	43	0.083	187.34	'FIRTH - SHELDON 115KV CKT 1'
12SP	00NR	2	'FROM->TO'	G10_044	'SHELDON - SW7TH & PLEASANT HILL 115KV CKT 2'	43	0.083	191.77	'103RD & ROKEBY - MOORE 345KV CKT 1'
13SP	00NR	2	'FROM->TO'	G10_044	'SHELDON - SW7TH & PLEASANT HILL 115KV CKT 2'	43	0.083	192.41	'103RD & ROKEBY - MOORE 345KV CKT 1'
17SP	00NR	2	'FROM->TO'	G10_044	'SHELDON - SW7TH & PLEASANT HILL 115KV CKT 2'	43	0.083	190.27	'103RD & ROKEBY - MOORE 345KV CKT 1'
12G	09NR	2	'FROM->TO'	G10_044	'SHELDON - SW7TH & PLEASANT HILL 115KV CKT 2'	43	0.083	161.08	'KELLY - MADISONCO 230.00 230KV CKT 1'
12G	09NR	2	'FROM->TO'	G10_044	'SHELDON - SW7TH & PLEASANT HILL 115KV CKT 2'	43	0.083	154.10	'BASE CASE'
12SP	00NR	2	'FROM->TO'	G10_044	'SHELDON - SW7TH & PLEASANT HILL 115KV CKT 2'	43	0.082	187.65	'ENRONTAP'
12SP	00NR	2	'FROM->TO'	G10_044	'SHELDON - SW7TH & PLEASANT HILL 115KV CKT 2'	43	0.082	187.65	'HYDROCARBON TAP - SUB 974 69KV CKT 1'
12SP	00NR	2	'FROM->TO'	G10_044	'SHELDON - SW7TH & PLEASANT HILL 115KV CKT 2'	43	0.082	187.65	'HYDROCARBON TAP - SUB 970 69KV CKT 1'
12SP	00NR	2	'FROM->TO'	G10_044	'SHELDON - SW7TH & PLEASANT HILL 115KV CKT 2'	43	0.082	186.16	'NEB CITY U SYR SUB - SUB 970 69KV CKT 1'
13SP	00NR	2	'FROM->TO'	G10_044	'SHELDON - SW7TH & PLEASANT HILL 115KV CKT 2'	43	0.082	187.23	'ENRONTAP'
13SP	00NR	2	'FROM->TO'	G10_044	'SHELDON - SW7TH & PLEASANT HILL 115KV CKT 2'	43	0.082	187.23	'HYDROCARBON TAP - SUB 974 69KV CKT 1'
13SP	00NR	2	'FROM->TO'	G10_044	'SHELDON - SW7TH & PLEASANT HILL 115KV CKT 2'	43	0.082	187.23	'HYDROCARBON TAP - SUB 970 69KV CKT 1'
13SP	00NR	2	'FROM->TO'	G10_044	'SHELDON - SW7TH & PLEASANT HILL 115KV CKT 2'	43	0.082	185.74	'NEB CITY U SYR SUB - SUB 970 69KV CKT 1'
12SP	00NR	2	'FROM->TO'	G10_044	'SHELDON - SW7TH & PLEASANT HILL 115KV CKT 2'	43	0.082	207.06	'MOORE - NW68TH & HOLDREGE 345KV CKT 1'
12G	09NR	2	'FROM->TO'	G10_044	'SHELDON - SW7TH & PLEASANT HILL 115KV CKT 2'	43	0.082	176.59	'103RD & ROKEBY - WAGENER 345KV CKT 1'
12SP	00NR	2	'FROM->TO'	G10_044	'SHELDON - SW7TH & PLEASANT HILL 115KV CKT 2'	43	0.082	172.76	'SUB 969 - SUB 974 69KV CKT 1'
17SP	00NR	2	'FROM->TO'	G10_044	'SHELDON - SW7TH & PLEASANT HILL 115KV CKT 2'	43	0.082	188.05	'HYDROCARBON TAP - SUB 974 69KV CKT 1'
17SP	00NR	2	'FROM->TO'	G10_044	'SHELDON - SW7TH & PLEASANT HILL 115KV CKT 2'	43	0.082	188.05	'HYDROCARBON TAP - SUB 970 69KV CKT 1'
17SP	00NR	2	'FROM->TO'	G10_044	'SHELDON - SW7TH & PLEASANT HILL 115KV CKT 2'	43	0.082	186.43	'NEB CITY U SYR SUB - SUB 970 69KV CKT 1'
17SP	00NR	2	'FROM->TO'	G10_044	'SHELDON - SW7TH & PLEASANT HILL 115KV CKT 2'	43	0.082	185.53	'NEB CITY U SYR SUB - SUB 971 69KV CKT 1'
17SP	00NR	2	'FROM->TO'	G10_044	'SHELDON - SW7TH & PLEASANT HILL 115KV CKT 2'	43	0.082	185.23	'MCCOOL - YORK SOUTHWEST 115KV CKT 1'
13SP	00NR	2	'FROM->TO'	G10_044	'SHELDON - SW7TH & PLEASANT HILL 115KV CKT 2'	43	0.082	207.06	'MOORE - NW68TH & HOLDREGE 345KV CKT 1'
17SP	00NR	2	'FROM->TO'	G10_044	'SHELDON - SW7TH & PLEASANT HILL 115KV CKT 2'	43	0.081	209.85	'MOORE - NW68TH & HOLDREGE 345KV CKT 1'
12SP	00NR	2	'FROM->TO'	G10_044	'SHELDON - SW7TH & PLEASANT HILL 115KV CKT 2'	43	0.081	171.53	'LN-1147'
12SP	00NR	2	'FROM->TO'	G10_044	'SHELDON - SW7TH & PLEASANT HILL 115KV CKT 2'	43	0.081	169.83	'LN-1142'
12SP	00NR	2	'FROM->TO'	G10_044	'SHELDON - SW7TH & PLEASANT HILL 115KV CKT 2'	43	0.081	195.99	'LES0001'
12SP	00NR	2	'FROM->TO'	G10_044	'SHELDON - SW7TH & PLEASANT HILL 115KV CKT 2'	43	0.081	178.65	'BASE CASE'
12SP	00NR	2	'FROM->TO'	G10_044	'SHELDON - SW7TH & PLEASANT HILL 115KV CKT 2'	43	0.081	171.47	'LN-TSGT6'
12SP	00NR	2	'FROM->TO'	G10_044	'SHELDON - SW7TH & PLEASANT HILL 115KV CKT 2'	43	0.081	170.91	'NEB02WAPAB2'
12SP	00NR	2	'FROM->TO'	G10_044	'SHELDON - SW7TH & PLEASANT HILL 115KV CKT 2'	43	0.081	169.27	'LN-STOCKVILL'
12SP	00NR	2	'FROM->TO'	G10_044	'SHELDON - SW7TH & PLEASANT HILL 115KV CKT 2'	43	0.081	164.94	'LN-WAPA4'
12SP	00NR	2	'FROM->TO'	G10_044	'SHELDON - SW7TH & PLEASANT HILL 115KV CKT 2'	43	0.081	185.91	'DBL-MATT-TAT'
12SP	00NR	2	'FROM->TO'	G10_044	'SHELDON - SW7TH & PLEASANT HILL 115KV CKT 2'	43	0.081	171.09	'LN-CALLAWAY'
12SP	00NR	2	'FROM->TO'	G10_044	'SHELDON - SW7TH & PLEASANT HILL 115KV CKT 2'	43	0.081	169.94	'LN-1163'
12SP	00NR	2	'FROM->TO'	G10_044	'SHELDON - SW7TH & PLEASANT HILL 115KV CKT 2'	43	0.081	169.41	'LN-S-CREEK'
12SP	00NR	2	'FROM->TO'	G10_044	'SHELDON - SW7TH & PLEASANT HILL 115KV CKT 2'	43	0.081	164.18	'LN-WAPA2'
12SP	00NR	2	'FROM->TO'	G10_044	'SHELDON - SW7TH & PLEASANT HILL 115KV CKT 2'	43	0.081	185.64	'STEGALL - WAYSIDE 230KV CKT 1'
12SP	00NR	2	'FROM->TO'	G10_044	'SHELDON - SW7TH & PLEASANT HILL 115KV CKT 2'	43	0.081	186.69	'ATCHSNT3 345.00 - BOONEVILLE 345KV CKT 1'
12SP	00NR	2	'FROM->TO'	G10_044	'SHELDON - SW7TH & PLEASANT HILL 115KV CKT 2'	43	0.081	186.16	'ATCHSNT3 345.00 - COOPER 345KV CKT 1'
13SP	00NR	2	'FROM->TO'	G10_044	'SHELDON - SW7TH & PLEASANT HILL 115KV CKT 2'	43	0.081	171.23	'LN-1142'
13SP	00NR	2	'FROM->TO'	G10_044	'SHELDON - SW7TH & PLEASANT HILL 115KV CKT 2'	43	0.081	168.52	'LN-STOCKVILL'
13SP	00NR	2	'FROM->TO'	G10_044	'SHELDON - SW7TH & PLEASANT HILL 115KV CKT 2'	43	0.081	195.41	'LES0001'
13SP	00NR	2	'FROM->TO'	G10_044	'SHELDON - SW7TH & PLEASANT HILL 115KV CKT 2'	43	0.081	178.15	'BASE CASE'
13SP	00NR	2	'FROM->TO'	G10_044	'SHELDON - SW7TH & PLEASANT HILL 115KV CKT 2'	43	0.081	171.39	'LN-MALONEY'
13SP	00NR	2	'FROM->TO'	G10_044	'SHELDON - SW7TH & PLEASANT HILL 115KV CKT 2'	43	0.081	171.07	'LN-TSGT6'
13SP	00NR	2	'FROM->TO'	G10_044	'SHELDON - SW7TH & PLEASANT HILL 115KV CKT 2'	43	0.081	164.14	'LN-WAPA4'
13SP	00NR	2	'FROM->TO'	G10_044	'SHELDON - SW7TH & PLEASANT HILL 115KV CKT 2'	43	0.081	163.27	'LN-WAPA2'
13SP	00NR	2	'FROM->TO'	G10_044	'SHELDON - SW7TH & PLEASANT HILL 115KV CKT 2'	43	0.081	185.41	'DBL-MATT-TAT'
13SP	00NR	2	'FROM->TO'	G10_044	'SHELDON - SW7TH & PLEASANT HILL 115KV CKT 2'	43	0.081	170.19	'LN-CALLAWAY'
13SP	00NR	2	'FROM->TO'	G10_044	'SHELDON - SW7TH & PLEASANT HILL 115KV CKT 2'	43	0.081	168.95	'LN-1163'
13SP	00NR	2	'FROM->TO'	G10_044	'SHELDON - SW7TH & PLEASANT HILL 115KV CKT 2'	43	0.081	167.91	'LN-S-CREEK'
12G	09NR	2	'FROM->TO'	G10_044	'SHELDON - SW7TH & PLEASANT HILL 115KV CKT 2'	43	0.081	165.47	'84TH & LEIGHTON - WAGENER 115KV CKT 1'
13SP	00NR	2	'FROM->TO'	G10_044	'SHELDON - SW7TH & PLEASANT HILL 115KV CKT 2'	43	0.081	185.21	'STEGALL - WAYSIDE 230KV CKT 1'

SEASON	GROUP	SCENARIO	DIRECTION	SOURCE	MONITORED ELEMENT	RATE B (MVA)	TDF	(%MVA) LOADING	CONTINGENCY
13SP	00NR	2	'FROM->TO'	G10_044	'SHELDON - SW7TH & PLEASANT HILL 115KV CKT 2'	43	0.081	186.08	'ATCHSNT3 345.00 - BOONEVILLE 345KV CKT 1'
13SP	00NR	2	'FROM->TO'	G10_044	'SHELDON - SW7TH & PLEASANT HILL 115KV CKT 2'	43	0.081	185.54	'ATCHSNT3 345.00 - COOPER 345KV CKT 1'
17SP	00NR	2	'FROM->TO'	G10_044	'SHELDON - SW7TH & PLEASANT HILL 115KV CKT 2'	43	0.081	178.27	'BASE CASE'
17SP	00NR	2	'FROM->TO'	G10_044	'SHELDON - SW7TH & PLEASANT HILL 115KV CKT 2'	43	0.080	187.31	'ATCHSNT3 345.00 - BOONEVILLE 345KV CKT 1'
17SP	00NR	2	'FROM->TO'	G10_044	'SHELDON - SW7TH & PLEASANT HILL 115KV CKT 2'	43	0.080	186.78	'ATCHSNT3 345.00 - COOPER 345KV CKT 1'
13SP	00NR	2	'FROM->TO'	G10_044	'SHELDON - SW7TH & PLEASANT HILL 115KV CKT 2'	43	0.080	185.25	'NW68TH & HOLDREGE - SW27TH & F 115KV CKT 1'
12SP	00NR	2	'FROM->TO'	G10_044	'SHELDON - SW7TH & PLEASANT HILL 115KV CKT 2'	43	0.080	210.30	'103RD & ROKEBY - WAGENER 345KV CKT 1'
12G	09NR	2	'FROM->TO'	G10_044	'SHELDON - SW7TH & PLEASANT HILL 115KV CKT 2'	43	0.080	168.59	'WAGENER (T852) 345/115/13.8KV TRANSFORMER CKT 2'
17SP	00NR	2	'FROM->TO'	G10_044	'SHELDON - SW7TH & PLEASANT HILL 115KV CKT 2'	43	0.080	185.29	'NW68TH & HOLDREGE - SW27TH & F 115KV CKT 1'
13SP	00NR	2	'FROM->TO'	G10_044	'SHELDON - SW7TH & PLEASANT HILL 115KV CKT 2'	43	0.080	186.14	'SUB 1281 - SUB 1287 161KV CKT 1'
13SP	00NR	2	'FROM->TO'	G10_044	'SHELDON - SW7TH & PLEASANT HILL 115KV CKT 2'	43	0.080	186.09	'1281LINBUS'
13SP	00NR	2	'FROM->TO'	G10_044	'SHELDON - SW7TH & PLEASANT HILL 115KV CKT 2'	43	0.080	210.18	'103RD & ROKEBY - WAGENER 345KV CKT 1'
12G	09NR	2	'FROM->TO'	G10_044	'SHELDON - SW7TH & PLEASANT HILL 115KV CKT 2'	43	0.080	169.91	'WAGENER (T851) 345/115/13.8KV TRANSFORMER CKT 1'
17SP	00NR	2	'FROM->TO'	G10_044	'SHELDON - SW7TH & PLEASANT HILL 115KV CKT 2'	43	0.080	186.70	'SUB 1281 - SUB 1287 161KV CKT 1'
17SP	00NR	2	'FROM->TO'	G10_044	'SHELDON - SW7TH & PLEASANT HILL 115KV CKT 2'	43	0.080	214.58	'103RD & ROKEBY - WAGENER 345KV CKT 1'
12SP	00NR	2	'FROM->TO'	G10_044	'SHELDON - SW7TH & PLEASANT HILL 115KV CKT 2'	43	0.080	171.47	'27TH & PINE LAKE - ROKEBY 115KV CKT 1'
13SP	00NR	2	'FROM->TO'	G10_044	'SHELDON - SW7TH & PLEASANT HILL 115KV CKT 2'	43	0.079	185.26	'81ST & OLD CHENEY - WAGENER 115KV CKT 1'
13SP	00NR	2	'FROM->TO'	G10_044	'SHELDON - SW7TH & PLEASANT HILL 115KV CKT 2'	43	0.079	170.66	'27TH & PINE LAKE - ROKEBY 115KV CKT 1'
12SP	00NR	2	'FROM->TO'	G10_044	'SHELDON - SW7TH & PLEASANT HILL 115KV CKT 2'	43	0.079	194.83	'84TH & LEIGHTON - WAGENER 115KV CKT 1'
17SP	00NR	2	'FROM->TO'	G10_044	'SHELDON - SW7TH & PLEASANT HILL 115KV CKT 2'	43	0.079	185.41	'81ST & OLD CHENEY - WAGENER 115KV CKT 1'
17SP	00NR	2	'FROM->TO'	G10_044	'SHELDON - SW7TH & PLEASANT HILL 115KV CKT 2'	43	0.079	169.78	'27TH & PINE LAKE - ROKEBY 115KV CKT 1'
13SP	00NR	2	'FROM->TO'	G10_044	'SHELDON - SW7TH & PLEASANT HILL 115KV CKT 2'	43	0.079	194.06	'84TH & LEIGHTON - WAGENER 115KV CKT 1'
17SP	00NR	2	'FROM->TO'	G10_044	'SHELDON - SW7TH & PLEASANT HILL 115KV CKT 2'	43	0.079	194.46	'84TH & LEIGHTON - WAGENER 115KV CKT 1'
12SP	00NR	2	'FROM->TO'	G10_044	'SHELDON - SW7TH & PLEASANT HILL 115KV CKT 2'	43	0.079	197.79	'WAGENER (T852) 345/115/13.8KV TRANSFORMER CKT 2'
12SP	00NR	2	'FROM->TO'	G10_044	'SHELDON - SW7TH & PLEASANT HILL 115KV CKT 2'	43	0.078	199.54	'WAGENER (T851) 345/115/13.8KV TRANSFORMER CKT 1'
13SP	00NR	2	'FROM->TO'	G10_044	'SHELDON - SW7TH & PLEASANT HILL 115KV CKT 2'	43	0.078	197.01	'WAGENER (T852) 345/115/13.8KV TRANSFORMER CKT 2'
13SP	00NR	2	'FROM->TO'	G10_044	'SHELDON - SW7TH & PLEASANT HILL 115KV CKT 2'	43	0.078	198.75	'WAGENER (T851) 345/115/13.8KV TRANSFORMER CKT 1'
17SP	00NR	2	'FROM->TO'	G10_044	'SHELDON - SW7TH & PLEASANT HILL 115KV CKT 2'	43	0.078	198.31	'WAGENER (T852) 345/115/13.8KV TRANSFORMER CKT 2'
17SP	00NR	2	'FROM->TO'	G10_044	'SHELDON - SW7TH & PLEASANT HILL 115KV CKT 2'	43	0.078	200.14	'WAGENER (T851) 345/115/13.8KV TRANSFORMER CKT 1'
12G	09NR	2	'FROM->TO'	G10_044	'SHELDON - SW7TH & PLEASANT HILL 115KV CKT 2'	43	0.076	187.14	'NW68TH & HOLDREGE (T141) 345/115/13.8KV TRANSFORMER CKT 1'
12G	09NR	2	'FROM->TO'	G10_044	'SHELDON - SW7TH & PLEASANT HILL 115KV CKT 2'	43	0.076	146.71	'ROKEBY - SW7TH & PLEASANT HILL 115KV CKT 1'
12SP	00NR	2	'FROM->TO'	G10_044	'SHELDON - SW7TH & PLEASANT HILL 115KV CKT 2'	43	0.075	222.64	'NW68TH & HOLDREGE (T141) 345/115/13.8KV TRANSFORMER CKT 1'
13SP	00NR	2	'FROM->TO'	G10_044	'SHELDON - SW7TH & PLEASANT HILL 115KV CKT 2'	43	0.074	222.06	'NW68TH & HOLDREGE (T141) 345/115/13.8KV TRANSFORMER CKT 1'
17SP	00NR	2	'FROM->TO'	G10_044	'SHELDON - SW7TH & PLEASANT HILL 115KV CKT 2'	43	0.074	223.39	'NW68TH & HOLDREGE (T141) 345/115/13.8KV TRANSFORMER CKT 1'
12G	09NR	2	'FROM->TO'	G10_044	'SHELDON - SW7TH & PLEASANT HILL 115KV CKT 2'	43	0.069	122.06	'20TH & PIONEERS - SW7TH & PLEASANT HILL 115KV CKT 1'
12SP	00NR	2	'FROM->TO'	G10_044	'SHELDON - SW7TH & PLEASANT HILL 115KV CKT 2'	43	0.068	136.23	'20TH & PIONEERS - SW7TH & PLEASANT HILL 115KV CKT 1'
13SP	00NR	2	'FROM->TO'	G10_044	'SHELDON - SW7TH & PLEASANT HILL 115KV CKT 2'	43	0.068	135.21	'20TH & PIONEERS - SW7TH & PLEASANT HILL 115KV CKT 1'
17SP	00NR	2	'FROM->TO'	G10_044	'SHELDON - SW7TH & PLEASANT HILL 115KV CKT 2'	43	0.068	132.09	'20TH & PIONEERS - SW7TH & PLEASANT HILL 115KV CKT 1'
12G	09NR	2	'FROM->TO'	G10_044	'SHELDON - SW7TH & PLEASANT HILL 115KV CKT 2'	43	0.063	146.69	'BEATRICE - HARBINE 115KV CKT 1'
12SP	00NR	2	'FROM->TO'	G10_044	'SHELDON - SW7TH & PLEASANT HILL 115KV CKT 2'	43	0.062	171.95	'BEATRICE - HARBINE 115KV CKT 1'
12G	03ALL	0		G10_061	NCONV-Iteration Limit	1792	0.354	47.07	'G11-17T 345.00 - POST ROCK 345KV CKT 1'
12G	03ALL	0		G10_061	NCONV-Blown Up	0	0.240	9999.00	'DBL-THIS-CLR'
12G	03ALL2	0		G10_061	NCONV-Blown Up	0	0.240	9999.00	'DBL-THIS-CLR'
12G	03ALL	0		G10_061	NCONV-Blown Up	0	0.164	9999.00	'DBL-CIR-RENO'
12G	03ALL2	0		G10_061	NCONV-Blown Up	0	0.164	9999.00	'DBL-CIR-RENO'
12G	03ALL	0		G10_061	NCONV-Iteration Limit	0	0.164	9999.00	'DBL-MULG-CIR'
12G	03ALL2	0		G10_061	NCONV-Iteration Limit	0	0.164	9999.00	'DBL-MULG-CIR'
12G	03ALL	0		G10_061	NCONV-Iteration Limit	0	0.164	9999.00	'DBL-SPRVL-MU'
12G	03ALL2	0		G10_061	NCONV-Iteration Limit	0	0.164	9999.00	'DBL-SPRVL-MU'
12G	03ALL	0		G10_061	NCONV-Iteration Limit	0	0.124	9999.00	'DBL-WICH-THI'
12G	03ALL2	0		G10_061	NCONV-Blown Up	0	0.124	9999.00	'DBL-WICH-THI'
12G	03ALL	0		G10_061	NCONV-Iteration Limit	0	0.106	9999.00	'DBL-MATT-TAT'
12G	03ALL2	0		G10_061	NCONV-Iteration Limit	0	0.106	9999.00	'DBL-MATT-TAT'
12G	03NR	0	'TO->FROM'	G10_061	'MULLERGREN - SPEARVILLE 230KV CKT 1'	355.3	0.071	114.08	'G11-17T 345.00 - POST ROCK 345KV CKT 1'
12G	03NR	0	'FROM->TO'	G10_061	'SMOKYHL6 230.00 - SUMMIT 230KV CKT 1'	319	0.067	105.61	'AXTELL - POST ROCK 345KV CKT 1'
12G	03NR	0	'TO->FROM'	G10_061	'N HAYS3 115.00 - VINE STREET 115KV CKT 1'	99	0.038	118.91	'KNOLL 230 - POSTROCK6 230.00 230KV CKT 1'
12G	03NR	0	'TO->FROM'	G10_061	'KNOLL - N HAYS3 115.00 115KV CKT 1'	99	0.038	114.31	'KNOLL 230 - POSTROCK6 230.00 230KV CKT 1'
12G	03NR	2	'TO->FROM'	G10_061	'MULLERGREN - SPEARVILLE 230KV CKT 1'	355.3	0.068	111.87	'G11-17T 345.00 - POST ROCK 345KV CKT 1'
12G	03NR	2	'FROM->TO'	G10_061	'SMOKYHL6 230.00 - SUMMIT 230KV CKT 1'	319	0.067	102.89	'AXTELL - POST ROCK 345KV CKT 1'
12G	03NR	2	'FROM->TO'	G10_061	'SMOKYHL6 230.00 - SUMMIT 230KV CKT 1'	319	0.049	111.04	'DBL-CIR-RENO'
12G	03NR	2	'FROM->TO'	G10_061	'SMOKYHL6 230.00 - SUMMIT 230KV CKT 1'	319	0.049	111.00	'DBL-MULG-CIR'
12G	03NR	2	'TO->FROM'	G10_061	'N HAYS3 115.00 - VINE STREET 115KV CKT 1'	99	0.038	115.69	'KNOLL 230 - POSTROCK6 230.00 230KV CKT 1'
12G	03NR	2	'TO->FROM'	G10_061	'KNOLL - N HAYS3 115.00 115KV CKT 1'	99	0.038	111.00	'KNOLL 230 - POSTROCK6 230.00 230KV CKT 1'
12G	03NR	3	'TO->FROM'	G10_061	'KNOLL 230 - POSTROCK6 230.00 230KV CKT 1'	398	0.116	100.00	'AXTELL - POST ROCK 345KV CKT 1'
12G	03NR	3	'TO->FROM'	G10_061	KNOLL 230 - POSTROCK6 230.00 230KV CKT 1'	398	0.11625	100	'AXTELL - POST ROCK 345KV CKT 1'
12G	03NR	3	'FROM->TO'	G10_061	'KNOLL 230 - SMOKYHL6 230.00 230KV CKT 1'	330	0.054	100.54	'DBL-CIR-RENO'
12G	03ALL	0		G11_037	NCONV-Iteration Limit	0	0.030	9999.00	'DBL-WICH-THI'
12G	03ALL2	0		G11_037	NCONV-Blown Up	0	0.030	9999.00	'DBL-WICH-THI'
12G	03ALL	0		G11_037	NCONV-Iteration Limit	1792	0.020	47.07	'G11-17T 345.00 - POST ROCK 345KV CKT 1'
13WP	00NR	0	'FROM->TO'	G11_040	'LAWEASOKLUNI'	425	0.033	171.60	'BASE CASE'
17WP	00NR	0	'FROM->TO'	G11_040	'LAWEASOKLUNI'	425	0.033	160.40	'BASE CASE'
12WP	00NR	0	'FROM->TO'	G11_040	'LAWEASOKLUNI'	425	0.033	172.60	'BASE CASE'
17SP	00NR	0	'FROM->TO'	G11_040	'LAWEASOKLUNI'	425	0.033	129.70	'BASE CASE'
13SP	00NR	0	'FROM->TO'	G11_040	'LAWEASOKLUNI'	425	0.032	124.20	'BASE CASE'
12SP	00NR	0	'FROM->TO'	G11_040	'LAWEASOKLUNI'	425	0.032	124.60	'BASE CASE'
12G	03ALL	0		G11_040	NCONV-Iteration Limit	1792	0.012	47.07	'G11-17T 345.00 - POST ROCK 345KV CKT 1'
13WP	00NR	2	'FROM->TO'	G11_040	'LAWEASOKLUNI'	425	0.036	178.80	'BASE CASE'
12WP	00NR	2	'FROM->TO'	G11_040	'LAWEASOKLUNI'	425	0.036	179.70	'BASE CASE'

SEASON	GROUP	SCENARIO	DIRECTION	SOURCE	MONITORED ELEMENT	RATE B (MVA)	TDF	(%MVA) LOADING	CONTINGENCY
17WP	00NR	2	'FROM->TO'	G11_040	'LAWEASOKLUNI'	425	0.036	168.50	'BASE CASE'
17SP	00NR	2	'FROM->TO'	G11_040	'LAWEASOKLUNI'	425	0.035	138.90	'BASE CASE'
13SP	00NR	2	'FROM->TO'	G11_040	'LAWEASOKLUNI'	425	0.034	134.50	'BASE CASE'
12SP	00NR	2	'FROM->TO'	G11_040	'LAWEASOKLUNI'	425	0.034	135.20	'BASE CASE'
13WP	00NR	3	'FROM->TO'	G11_040	'LAWEASOKLUNI'	425	0.036	179.40	'BASE CASE'
12WP	00NR	3	'FROM->TO'	G11_040	'LAWEASOKLUNI'	425	0.036	180.10	'BASE CASE'
17WP	00NR	3	'FROM->TO'	G11_040	'LAWEASOKLUNI'	425	0.036	169.00	'BASE CASE'
17SP	00NR	3	'FROM->TO'	G11_040	'LAWEASOKLUNI'	425	0.035	139.10	'BASE CASE'
13SP	00NR	3	'FROM->TO'	G11_040	'LAWEASOKLUNI'	425	0.034	134.50	'BASE CASE'
12SP	00NR	3	'FROM->TO'	G11_040	'LAWEASOKLUNI'	425	0.034	135.20	'BASE CASE'
12G	08G11_041	0	'FROM->TO'	G11_041	'G08-13T 345.00 - WOODRING 345KV CKT 1'	956	1.000	124.35	'SUMNERCO 345.00 - WICHITA 345KV CKT 1'
12G	08G11_041	0	'TO->FROM'	G11_041	'G08-13T 345.00 - SUMNERCO 345.00 345KV CKT 1'	956	1.000	101.63	'SUMNERCO 345.00 - WICHITA 345KV CKT 1'
12G	3	0	'TO->FROM'	G11_041	'BENTON - WICHITA 345KV CKT 1'	956	0.207	102.51	'DBL-MATT-TAT'
12G	3	0	'TO->FROM'	G11_041	'BENTON - WICHITA 345KV CKT 1'	956	0.204	113.42	'GEN532751 1-WOLF CREEK GENERATING STATION UNIT 1'
12G	03ALL	0		G11_041	NCONV-Iteration Limit	1792	0.022	47.07	'G11-17T 345.00 - POST ROCK 345KV CKT 1'
12G	03ALL	0		G11_041	NCONV-Iteration Limit	0	0.014	9999.00	'DBL-MATT-TAT'
12G	03ALL2	0		G11_041	NCONV-Iteration Limit	0	0.014	9999.00	'DBL-MATT-TAT'
12G	08G11_042	0	'FROM->TO'	G11_042	'G08-13T 345.00 - WOODRING 345KV CKT 1'	956	1.000	124.35	'SUMNERCO 345.00 - WICHITA 345KV CKT 1'
12G	08NR	0	'FROM->TO'	G11_042	'G08-13T 345.00 - WOODRING 345KV CKT 1'	956	1.000	103.04	'SUMNERCO 345.00 - WICHITA 345KV CKT 1'
12G	08NR	0	'FROM->TO'	G11_042	'SUMNERCO 345.00 - WICHITA 345KV CKT 1'	956	1.000	102.14	'G08-13T 345.00 - WOODRING 345KV CKT 1'
12G	08G11_042	0	'TO->FROM'	G11_042	'G08-13T 345.00 - SUMNERCO 345.00 345KV CKT 1'	956	1.000	101.63	'SUMNERCO 345.00 - WICHITA 345KV CKT 1'
12G	3	0	'TO->FROM'	G11_042	'BENTON - WICHITA 345KV CKT 1'	956	0.207	102.51	'DBL-MATT-TAT'
12G	3	0	'TO->FROM'	G11_042	'BENTON - WICHITA 345KV CKT 1'	956	0.204	113.42	'GEN532751 1-WOLF CREEK GENERATING STATION UNIT 1'
12WP	00NR	0	'TO->FROM'	G11_042	'BENTON - WICHITA 345KV CKT 1'	956	0.163	111.25	'GEN532751 1-WOLF CREEK GENERATING STATION UNIT 1'
17WP	00NR	0	'TO->FROM'	G11_042	'BENTON - WICHITA 345KV CKT 1'	956	0.162	106.16	'GEN532751 1-WOLF CREEK GENERATING STATION UNIT 1'
13WP	00NR	0	'TO->FROM'	G11_042	'BENTON - WICHITA 345KV CKT 1'	956	0.161	109.79	'GEN532751 1-WOLF CREEK GENERATING STATION UNIT 1'
12WP	00NR	0	'TO->FROM'	G11_042	'BENTON - WICHITA 345KV CKT 1'	956	0.160	108.26	'DBL-MATT-TAT'
13WP	00NR	0	'TO->FROM'	G11_042	'BENTON - WICHITA 345KV CKT 1'	956	0.159	105.51	'DBL-MATT-TAT'
17SP	00NR	0	'TO->FROM'	G11_042	'BENTON - WICHITA 345KV CKT 1'	956	0.150	108.74	'GEN532751 1-WOLF CREEK GENERATING STATION UNIT 1'
12SP	00NR	0	'TO->FROM'	G11_042	'BENTON - WICHITA 345KV CKT 1'	956	0.147	100.67	'DBL-MATT-TAT'
17SP	00NR	0	'FROM->TO'	G11_042	'WICHITA (WICHT12X) 345/138/13.8KV TRANSFORMER CKT 1'	440	0.113	106.69	'WICHITA (WICHT11X) 345/138/13.8KV TRANSFORMER CKT 1'
17SP	00NR	0	'FROM->TO'	G11_042	'WICHITA (WICHT12X) 345/138/13.8KV TRANSFORMER CKT 1'	440	0.113	105.64	'WICHITA (WICHT11X) 345/138/13.8KV TRANSFORMER CKT 1'
17SP	00NR	0	'FROM->TO'	G11_042	'WICHITA (WICHT12X) 345/138/13.8KV TRANSFORMER CKT 1'	440	0.108	107.52	'BENTON - WICHITA 345KV CKT 1'
17SP	00NR	0	'FROM->TO'	G11_042	'WICHITA (WICHT12X) 345/138/13.8KV TRANSFORMER CKT 1'	440	0.108	106.09	'BENTON - WICHITA 345KV CKT 1'
17SP	00NR	0	'FROM->TO'	G11_042	'WICHITA (WICHT11X) 345/138/13.8KV TRANSFORMER CKT 1'	440	0.106	100.18	'WICHITA (WICHT12X) 345/138/13.8KV TRANSFORMER CKT 1'
13WP	00NR	0	'FROM->TO'	G11_042	'MATTHEWSON 345.00 - NORTHWEST 345KV CKT 1'	1195	0.084	135.51	'DBL-MATT-CIM'
12WP	00NR	0	'FROM->TO'	G11_042	'MATTHEWSON 345.00 - NORTHWEST 345KV CKT 1'	1195	0.083	135.11	'DBL-MATT-CIM'
17WP	00NR	0	'FROM->TO'	G11_042	'MATTHEWSON 345.00 - NORTHWEST 345KV CKT 1'	1195	0.083	129.10	'DBL-MATT-CIM'
17WP	00NR	0	'FROM->TO'	G11_042	'WICHITA (WICHT12X) 345/138/13.8KV TRANSFORMER CKT 1'	440	0.081	100.91	'BENTON - WICHITA 345KV CKT 1'
17WP	00NR	0	'FROM->TO'	G11_042	'WICHITA (WICHT12X) 345/138/13.8KV TRANSFORMER CKT 1'	440	0.081	100.17	'BENTON - WICHITA 345KV CKT 1'
13SP	00NR	0	'FROM->TO'	G11_042	'MATTHEWSON 345.00 - NORTHWEST 345KV CKT 1'	1195	0.075	112.07	'DBL-MATT-CIM'
12SP	00NR	0	'FROM->TO'	G11_042	'MATTHEWSON 345.00 - NORTHWEST 345KV CKT 1'	1195	0.074	112.53	'DBL-MATT-CIM'
12WP	00NR	0	'FROM->TO'	G11_042	'WICHITA (WICHT12X) 345/138/13.8KV TRANSFORMER CKT 1'	440	0.071	111.73	'BENTON - WICHITA 345KV CKT 1'
12WP	00NR	0	'FROM->TO'	G11_042	'WICHITA (WICHT12X) 345/138/13.8KV TRANSFORMER CKT 1'	440	0.071	110.42	'BENTON - WICHITA 345KV CKT 1'
13WP	00NR	0	'FROM->TO'	G11_042	'WICHITA (WICHT12X) 345/138/13.8KV TRANSFORMER CKT 1'	440	0.070	105.68	'BENTON - WICHITA 345KV CKT 1'
13WP	00NR	0	'FROM->TO'	G11_042	'WICHITA (WICHT12X) 345/138/13.8KV TRANSFORMER CKT 1'	440	0.070	103.47	'BENTON - WICHITA 345KV CKT 1'
12WP	00NR	0	'FROM->TO'	G11_042	'WICHITA (WICHT12X) 345/138/13.8KV TRANSFORMER CKT 1'	440	0.053	110.76	'WICHITA (WICHT11X) 345/138/13.8KV TRANSFORMER CKT 1'
12WP	00NR	0	'FROM->TO'	G11_042	'WICHITA (WICHT12X) 345/138/13.8KV TRANSFORMER CKT 1'	440	0.053	109.89	'WICHITA (WICHT11X) 345/138/13.8KV TRANSFORMER CKT 1'
13WP	00NR	0	'FROM->TO'	G11_042	'WICHITA (WICHT12X) 345/138/13.8KV TRANSFORMER CKT 1'	440	0.053	101.92	'WICHITA (WICHT11X) 345/138/13.8KV TRANSFORMER CKT 1'
13WP	00NR	0	'FROM->TO'	G11_042	'WICHITA (WICHT12X) 345/138/13.8KV TRANSFORMER CKT 1'	440	0.053	100.00	'WICHITA (WICHT11X) 345/138/13.8KV TRANSFORMER CKT 1'
12WP	00NR	0	'FROM->TO'	G11_042	'WICHITA (WICHT11X) 345/138/13.8KV TRANSFORMER CKT 1'	440	0.050	104.18	'WICHITA (WICHT12X) 345/138/13.8KV TRANSFORMER CKT 1'
12WP	00NR	0	'FROM->TO'	G11_042	'WICHITA (WICHT11X) 345/138/13.8KV TRANSFORMER CKT 1'	440	0.050	103.24	'WICHITA (WICHT12X) 345/138/13.8KV TRANSFORMER CKT 1'
13WP	00NR	0	'FROM->TO'	G11_042	'CIMARRON - DRAPER LAKE 345KV CKT 1'	717	0.038	117.35	'ARCADIA - NORTHWEST 345KV CKT 1'
12WP	00NR	0	'FROM->TO'	G11_042	'CIMARRON - DRAPER LAKE 345KV CKT 1'	717	0.038	112.50	'ARCADIA - NORTHWEST 345KV CKT 1'
13WP	00NR	0	'FROM->TO'	G11_042	'CIMARRON - DRAPER LAKE 345KV CKT 1'	717	0.037	113.22	'CLEVELAND - SOONER 345KV CKT 1'
12WP	00NR	0	'FROM->TO'	G11_042	'CIMARRON - DRAPER LAKE 345KV CKT 1'	717	0.037	109.18	'CLEVELAND - SOONER 345KV CKT 1'
17WP	00NR	0	'FROM->TO'	G11_042	'CIMARRON - DRAPER LAKE 345KV CKT 1'	717	0.037	104.47	'ARCADIA - NORTHWEST 345KV CKT 1'
17WP	00NR	0	'FROM->TO'	G11_042	'CIMARRON - DRAPER LAKE 345KV CKT 1'	717	0.037	103.17	'CLEVELAND - SOONER 345KV CKT 1'
13WP	00NR	0	'FROM->TO'	G11_042	'CIMARRON - DRAPER LAKE 345KV CKT 1'	717	0.036	103.35	'EMPORIA ENERGY CENTER - WICHITA 345KV CKT 1'
13WP	00NR	0	'FROM->TO'	G11_042	'CIMARRON - DRAPER LAKE 345KV CKT 1'	717	0.036	103.94	'SOONER - WOODRING 345KV CKT 1'
17SP	00NR	0	'FROM->TO'	G11_042	'EVANS ENERGY CENTER NORTH - MAIZE 138KV CKT 1'	382	0.035	113.45	'BENTON - WICHITA 345KV CKT 1'
17SP	00NR	0	'TO->FROM'	G11_042	'CHISHOLM - MAIZE 138KV CKT 1'	382	0.035	109.10	'BENTON - WICHITA 345KV CKT 1'
13WP	00NR	0	'FROM->TO'	G11_042	'CIMARRON - DRAPER LAKE 345KV CKT 1'	717	0.035	108.44	'CLEVELAND - TULSA NORTH 345KV CKT 1'
12WP	00NR	0	'FROM->TO'	G11_042	'CIMARRON - DRAPER LAKE 345KV CKT 1'	717	0.034	104.28	'CLEVELAND - TULSA NORTH 345KV CKT 1'
13WP	00NR	0	'FROM->TO'	G11_042	'CIMARRON - DRAPER LAKE 345KV CKT 1'	717	0.034	103.82	'GRACEMONT - MINCO 345KV CKT 1'
13WP	00NR	0	'FROM->TO'	G11_042	'CIMARRON - DRAPER LAKE 345KV CKT 1'	717	0.034	103.28	'CIMARRON - MINCO 345KV CKT 1'
13WP	00NR	0	'FROM->TO'	G11_042	'CIMARRON - DRAPER LAKE 345KV CKT 1'	717	0.034	114.08	'ARCADIA - HORSESHOE LAKE 345KV CKT 1'
13WP	00NR	0	'FROM->TO'	G11_042	'CIMARRON - DRAPER LAKE 345KV CKT 1'	717	0.034	114.05	'HORSESHOE LAKE - SEMINOLE 345KV CKT 1'
12WP	00NR	0	'FROM->TO'	G11_042	'CIMARRON - DRAPER LAKE 345KV CKT 1'	717	0.033	108.82	'ARCADIA - HORSESHOE LAKE 345KV CKT 1'
12WP	00NR	0	'FROM->TO'	G11_042	'CIMARRON - DRAPER LAKE 345KV CKT 1'	717	0.033	108.82	'HORSESHOE LAKE - SEMINOLE 345KV CKT 1'
13WP	00NR	0	'FROM->TO'	G11_042	'CIMARRON - DRAPER LAKE 345KV CKT 1'	717	0.033	105.38	'ANDERSONCO 345.00 - LACYGNE 345KV CKT 1'
13WP	00NR	0	'FROM->TO'	G11_042	'CIMARRON - DRAPER LAKE 345KV CKT 1'	717	0.033	105.27	'ANDERSONCO 345.00 - WOLF CREEK 345KV CKT 1'
13WP	00NR	0	'FROM->TO'	G11_042	'CIMARRON - DRAPER LAKE 345KV CKT 1'	717	0.033	121.69	'LAWTON EASTSIDE - SUNNYSIDE 345KV CKT 1'
17WP	00NR	0	'FROM->TO'	G11_042	'CIMARRON - DRAPER LAKE 345KV CKT 1'	717	0.033	104.31	'ARCADIA - HORSESHOE LAKE 345KV CKT 1'
17WP	00NR	0	'FROM->TO'	G11_042	'CIMARRON - DRAPER LAKE 345KV CKT 1'	717	0.033	104.31	'HORSESHOE LAKE - SEMINOLE 345KV CKT 1'
12WP	00NR	0	'FROM->TO'	G11_042	'CIMARRON - DRAPER LAKE 345KV CKT 1'	717	0.033	101.12	'ANDERSONCO 345.00 - LACYGNE 345KV CKT 1'
12WP	00NR	0	'FROM->TO'	G11_042	'CIMARRON - DRAPER LAKE 345KV CKT 1'	717	0.033	101.01	'ANDERSONCO 345.00 - WOLF CREEK 345KV CKT 1'
13WP	00NR	0	'FROM->TO'	G11_042	'CIMARRON - DRAPER LAKE 345KV CKT 1'	717	0.033	102.82	'RENO COUNTY - SUMMIT 345KV CKT 1'

SEASON	GROUP	SCENARIO	DIRECTION	SOURCE	MONITORED ELEMENT	RATE B (MVA)	TDF	(%MVA) LOADING	CONTINGENCY
12WP	00NR	0	'FROM->TO'	G11_042	'CIMARRON - DRAPER LAKE 345KV CKT 1'	717	0.033	117.18	'LAWTON EASTSIDE - SUNNYSIDE 345KV CKT 1'
13WP	00NR	0	'FROM->TO'	G11_042	'CIMARRON - DRAPER LAKE 345KV CKT 1'	717	0.033	103.77	'BENTON - WICHITA 345KV CKT 1'
13WP	00NR	0	'FROM->TO'	G11_042	'CIMARRON - DRAPER LAKE 345KV CKT 1'	717	0.032	105.18	'CANEYRV7 345.00 - NEOSHO 345KV CKT 1'
13WP	00NR	0	'FROM->TO'	G11_042	'CIMARRON - DRAPER LAKE 345KV CKT 1'	717	0.032	105.04	'CANEYRV7 345.00 - LATHAMS7 345.00 345KV CKT 1'
13WP	00NR	0	'FROM->TO'	G11_042	'CIMARRON - DRAPER LAKE 345KV CKT 1'	717	0.032	104.54	'LATHAMS7 345.00 - ROSE HILL 345KV CKT 1'
13WP	00NR	0	'FROM->TO'	G11_042	'CIMARRON - DRAPER LAKE 345KV CKT 1'	717	0.032	110.42	'MATTHEWSON 345.00 - NORTHWEST 345KV CKT 1'
17WP	00NR	0	'FROM->TO'	G11_042	'CIMARRON - DRAPER LAKE 345KV CKT 1'	717	0.032	109.96	'LAWTON EASTSIDE - SUNNYSIDE 345KV CKT 1'
12WP	00NR	0	'FROM->TO'	G11_042	'CIMARRON - DRAPER LAKE 345KV CKT 1'	717	0.032	100.96	'CANEYRV7 345.00 - NEOSHO 345KV CKT 1'
12WP	00NR	0	'FROM->TO'	G11_042	'CIMARRON - DRAPER LAKE 345KV CKT 1'	717	0.032	100.82	'CANEYRV7 345.00 - LATHAMS7 345.00 345KV CKT 1'
12WP	00NR	0	'FROM->TO'	G11_042	'CIMARRON - DRAPER LAKE 345KV CKT 1'	717	0.032	100.35	'LATHAMS7 345.00 - ROSE HILL 345KV CKT 1'
12WP	00NR	0	'FROM->TO'	G11_042	'CIMARRON - DRAPER LAKE 345KV CKT 1'	717	0.032	106.21	'MATTHEWSON 345.00 - NORTHWEST 345KV CKT 1'
17WP	00NR	0	'FROM->TO'	G11_042	'CIMARRON - DRAPER LAKE 345KV CKT 1'	717	0.032	101.14	'MATTHEWSON 345.00 - NORTHWEST 345KV CKT 1'
13WP	00NR	0	'FROM->TO'	G11_042	'CIMARRON - DRAPER LAKE 345KV CKT 1'	717	0.031	102.80	'WOODRING (WOODRNG2) 345/138/13.8KV TRANSFORMER CKT 1'
13WP	00NR	0	'FROM->TO'	G11_042	'CIMARRON - DRAPER LAKE 345KV CKT 1'	717	0.031	101.81	'RENO COUNTY - WICHITA 345KV CKT 1'
13WP	00NR	0	'FROM->TO'	G11_042	'CIMARRON - DRAPER LAKE 345KV CKT 1'	717	0.031	104.83	'REDBUD - RIVERSIDE STATION 345KV CKT 1'
13WP	00NR	0	'FROM->TO'	G11_042	'CIMARRON - DRAPER LAKE 345KV CKT 1'	717	0.031	103.25	'MINGO - RED WILLOW 345KV CKT 1'
13WP	00NR	0	'FROM->TO'	G11_042	'CIMARRON - DRAPER LAKE 345KV CKT 1'	717	0.031	102.99	'EMPORIA ENERGY CENTER - SWISSVALE 345KV CKT 1'
13WP	00NR	0	'FROM->TO'	G11_042	'CIMARRON - DRAPER LAKE 345KV CKT 1'	717	0.031	103.74	'G11-17T 345.00 - POST ROCK 345KV CKT 1'
12WP	00NR	0	'FROM->TO'	G11_042	'CIMARRON - DRAPER LAKE 345KV CKT 1'	717	0.031	100.63	'REDBUD - RIVERSIDE STATION 345KV CKT 1'
13WP	00NR	0	'FROM->TO'	G11_042	'CIMARRON - DRAPER LAKE 345KV CKT 1'	717	0.031	103.93	'AXTELL - POST ROCK 345KV CKT 1'
13WP	00NR	0	'FROM->TO'	G11_042	'CIMARRON - DRAPER LAKE 345KV CKT 1'	717	0.031	101.77	'ROSE HILL - WOLF CREEK 345KV CKT 1'
13WP	00NR	0	'FROM->TO'	G11_042	'CIMARRON - DRAPER LAKE 345KV CKT 1'	717	0.031	103.22	'MINGO - SETAB 345KV CKT 1'
13WP	00NR	0	'FROM->TO'	G11_042	'CIMARRON - DRAPER LAKE 345KV CKT 1'	717	0.030	107.46	'CIMARRON - SARA 138KV CKT 1'
13WP	00NR	0	'FROM->TO'	G11_042	'CIMARRON - DRAPER LAKE 345KV CKT 1'	717	0.030	106.37	'MCCLAIN - SARA 138KV CKT 1'
13WP	00NR	0	'FROM->TO'	G11_042	'CIMARRON - DRAPER LAKE 345KV CKT 1'	717	0.030	107.59	'CIMARRON (CIMARON1) 345/138/13.8KV TRANSFORMER CKT 1'
13WP	00NR	0	'FROM->TO'	G11_042	'CIMARRON - DRAPER LAKE 345KV CKT 1'	717	0.030	107.39	'CIMARRON (CIMARON2) 345/138/13.8KV TRANSFORMER CKT 1'
13WP	00NR	0	'FROM->TO'	G11_042	'CIMARRON - DRAPER LAKE 345KV CKT 1'	717	0.030	101.57	'DBL-CLRK-G11'
13WP	00NR	0	'FROM->TO'	G11_042	'CIMARRON - DRAPER LAKE 345KV CKT 1'	717	0.030	101.14	'DBL-THIS-CLR'
12SP	00NR	0	'FROM->TO'	G11_042	'EVANS ENERGY CENTER NORTH - MAIZE 138KV CKT 1'	382	0.030	122.71	'BENTON - WICHITA 345KV CKT 1'
12SP	00NR	0	'TO->FROM'	G11_042	'CHISHOLM - MAIZE 138KV CKT 1'	382	0.030	118.96	'BENTON - WICHITA 345KV CKT 1'
13WP	00NR	0	'FROM->TO'	G11_042	'CIMARRON - DRAPER LAKE 345KV CKT 1'	717	0.030	102.88	'HOLCOMB - SETAB 345KV CKT 1'
13WP	00NR	0	'FROM->TO'	G11_042	'CIMARRON - DRAPER LAKE 345KV CKT 1'	717	0.030	103.06	'JOHNSON COUNTY - PITTSBURG 345KV CKT 1'
13WP	00NR	0	'FROM->TO'	G11_042	'CIMARRON - DRAPER LAKE 345KV CKT 1'	717	0.030	104.11	'HORSESHOE LAKE - JONES TAP 138KV CKT 1'
13WP	00NR	0	'FROM->TO'	G11_042	'CIMARRON - DRAPER LAKE 345KV CKT 1'	717	0.030	102.95	'MARSHALL - WOODRING 138KV CKT 1'
13WP	00NR	0	'FROM->TO'	G11_042	'CIMARRON - DRAPER LAKE 345KV CKT 1'	717	0.030	102.95	'COTTONWOOD CREEK - MARSHALL 138KV CKT 1'
13WP	00NR	0	'FROM->TO'	G11_042	'CIMARRON - DRAPER LAKE 345KV CKT 1'	717	0.030	103.93	'MORISNT4 138.00 - STILLWATER 138KV CKT 1'
13WP	00NR	0	'FROM->TO'	G11_042	'CIMARRON - DRAPER LAKE 345KV CKT 1'	717	0.030	101.68	'OSAGE - WEBB CITY TAP 138KV CKT 1'
13WP	00NR	0	'FROM->TO'	G11_042	'CIMARRON - DRAPER LAKE 345KV CKT 1'	717	0.030	101.50	'FAIRFAX TAP - WEBB CITY TAP 138KV CKT 1'
13WP	00NR	0	'FROM->TO'	G11_042	'CIMARRON - DRAPER LAKE 345KV CKT 1'	717	0.030	103.98	'OGE3TERM47'
13WP	00NR	0	'FROM->TO'	G11_042	'CIMARRON - DRAPER LAKE 345KV CKT 1'	717	0.030	101.56	'HOLLYWOOD - MIDWEST TAP 138KV CKT 1'
13WP	00NR	0	'FROM->TO'	G11_042	'CIMARRON - DRAPER LAKE 345KV CKT 1'	717	0.030	100.87	'OAKCREEK - WILD MARY 138KV CKT 1'
13WP	00NR	0	'FROM->TO'	G11_042	'CIMARRON - DRAPER LAKE 345KV CKT 1'	717	0.030	100.61	'AIRDEPT4 138.00 - WILD MARY 138KV CKT 1'
13WP	00NR	0	'FROM->TO'	G11_042	'CIMARRON - DRAPER LAKE 345KV CKT 1'	717	0.030	100.61	'AIRDEPT4 138.00 - GM 138KV CKT 1'
13WP	00NR	0	'FROM->TO'	G11_042	'CIMARRON - DRAPER LAKE 345KV CKT 1'	717	0.030	100.35	'DRAPER LAKE - GM 138KV CKT 1'
13WP	00NR	0	'FROM->TO'	G11_042	'CIMARRON - DRAPER LAKE 345KV CKT 1'	717	0.030	103.64	'HUGO - SUNNYSIDE 345KV CKT 1'
13WP	00NR	0	'FROM->TO'	G11_042	'CIMARRON - DRAPER LAKE 345KV CKT 1'	717	0.030	103.39	'OGE3TERM18'
13WP	00NR	0	'FROM->TO'	G11_042	'CIMARRON - DRAPER LAKE 345KV CKT 1'	717	0.030	101.09	'BEAVER CO 345.00 - WOODWARD DISTRICT EHV 345KV CKT 1'
12WP	00NR	0	'FROM->TO'	G11_042	'CIMARRON - DRAPER LAKE 345KV CKT 1'	717	0.030	104.13	'CIMARRON - SARA 138KV CKT 1'
12WP	00NR	0	'FROM->TO'	G11_042	'CIMARRON - DRAPER LAKE 345KV CKT 1'	717	0.030	103.74	'CIMARRON (CIMARON1) 345/138/13.8KV TRANSFORMER CKT 1'
13WP	00NR	0	'FROM->TO'	G11_042	'CIMARRON - DRAPER LAKE 345KV CKT 1'	717	0.030	103.29	'36 & MERIDIAN - PENNSYLVANIA 138KV CKT 1'
12WP	00NR	0	'FROM->TO'	G11_042	'CIMARRON - DRAPER LAKE 345KV CKT 1'	717	0.030	102.88	'MCCLAIN - SARA 138KV CKT 1'
13WP	00NR	0	'FROM->TO'	G11_042	'CIMARRON - DRAPER LAKE 345KV CKT 1'	717	0.030	102.68	'DBL-FINY-HOL'
13WP	00NR	0	'FROM->TO'	G11_042	'CIMARRON - DRAPER LAKE 345KV CKT 1'	717	0.030	105.59	'NORTHWEST (NORTWST2) 345/138/13.8KV TRANSFORMER CKT 1'
13WP	00NR	0	'FROM->TO'	G11_042	'CIMARRON - DRAPER LAKE 345KV CKT 1'	717	0.030	106.85	'CIMARRON - CZECH HALL 138KV CKT 1'
13WP	00NR	0	'FROM->TO'	G11_042	'CIMARRON - DRAPER LAKE 345KV CKT 1'	717	0.030	106.40	'CZECH HALL - XEROX 138KV CKT 1'
13WP	00NR	0	'FROM->TO'	G11_042	'CIMARRON - DRAPER LAKE 345KV CKT 1'	717	0.030	106.38	'MORGAN - XEROX 138KV CKT 1'
13WP	00NR	0	'FROM->TO'	G11_042	'CIMARRON - DRAPER LAKE 345KV CKT 1'	717	0.030	106.33	'MORGAN - MUSTANG 138KV CKT 1'
13WP	00NR	0	'FROM->TO'	G11_042	'CIMARRON - DRAPER LAKE 345KV CKT 1'	717	0.030	104.56	'JOHNSON COUNTY - SUNNYSIDE 345KV CKT 1'
12WP	00NR	0	'FROM->TO'	G11_042	'CIMARRON - DRAPER LAKE 345KV CKT 1'	717	0.030	103.53	'CIMARRON (CIMARON2) 345/138/13.8KV TRANSFORMER CKT 1'
13WP	00NR	0	'FROM->TO'	G11_042	'CIMARRON - DRAPER LAKE 345KV CKT 1'	717	0.030	101.78	'PECAN CREEK - RIVERSIDE STATION 345KV CKT 1'
13WP	00NR	0	'FROM->TO'	G11_042	'CIMARRON - DRAPER LAKE 345KV CKT 1'	717	0.030	103.25	'FAIRFAX TAP - SHIDLER 138KV CKT 1'
13WP	00NR	0	'FROM->TO'	G11_042	'CIMARRON - DRAPER LAKE 345KV CKT 1'	717	0.030	103.21	'SHIDLER - WEST PAWHUSKA 138KV CKT 1'
13WP	00NR	0	'FROM->TO'	G11_042	'CIMARRON - DRAPER LAKE 345KV CKT 1'	717	0.030	103.21	'PAWHUSKA TAP - WEST PAWHUSKA 138KV CKT 1'
13WP	00NR	0	'FROM->TO'	G11_042	'CIMARRON - DRAPER LAKE 345KV CKT 1'	717	0.030	103.16	'DOMES - PAWHUSKA TAP 138KV CKT 1'
13WP	00NR	0	'FROM->TO'	G11_042	'CIMARRON - DRAPER LAKE 345KV CKT 1'	717	0.030	103.13	'DOMES - MOUND ROAD 138KV CKT 1'
13WP	00NR	0	'FROM->TO'	G11_042	'CIMARRON - DRAPER LAKE 345KV CKT 1'	717	0.030	104.85	'NORTHWEST (NORTWST3) 345/138/13.8KV TRANSFORMER CKT 1'
12G	03ALL	0		G11_042	NCONV-Iteration Limit	1792	0.022	47.07	'G11-17T 345.00 - POST ROCK 345KV CKT 1'
12G	03ALL	0		G11_042	NCONV-Iteration Limit	0	0.014	9999.00	'DBL-MATT-TAT'
12G	03ALL2	0		G11_042	NCONV-Iteration Limit	0	0.014	9999.00	'DBL-MATT-TAT'
13WP	00NR	2	'FROM->TO'	G11_042	'MATTHEWSON 345.00 - NORTHWEST 345KV CKT 1'	1195	0.057	147.63	'DBL-MATT-CIM'
17WP	00NR	2	'FROM->TO'	G11_042	'MATTHEWSON 345.00 - NORTHWEST 345KV CKT 1'	1195	0.056	140.13	'DBL-MATT-CIM'
13SP	00NR	2	'FROM->TO'	G11_042	'MATTHEWSON 345.00 - NORTHWEST 345KV CKT 1'	1195	0.048	120.38	'DBL-MATT-CIM'
12SP	00NR	2	'FROM->TO'	G11_042	'MATTHEWSON 345.00 - NORTHWEST 345KV CKT 1'	1195	0.047	120.76	'DBL-MATT-CIM'
13WP	00NR	2	'FROM->TO'	G11_042	'CIMARRON - DRAPER LAKE 345KV CKT 1'	717	0.031	118.95	'CLEVELAND - SOONER 345KV CKT 1'
12WP	00NR	2	'FROM->TO'	G11_042	'CIMARRON - DRAPER LAKE 345KV CKT 1'	717	0.030	114.88	'CLEVELAND - SOONER 345KV CKT 1'
13WP	00NR	2	'FROM->TO'	G11_042	'CIMARRON - DRAPER LAKE 345KV CKT 1'	717	0.030	124.03	'ARCADIA - NORTHWEST 345KV CKT 1'
17WP	00NR	2	'FROM->TO'	G11_042	'CIMARRON - DRAPER LAKE 345KV CKT 1'	717	0.030	108.45	'CLEVELAND - SOONER 345KV CKT 1'
13WP	00NR	3	'FROM->TO'	G11_042	'MATTHEWSON 345.00 - NORTHWEST 345KV CKT 1'	1195	0.057	148.76	'DBL-MATT-CIM'

SEASON	GROUP	SCENARIO	DIRECTION	SOURCE	MONITORED ELEMENT	RATE B (MVA)	TDF	(%MVA) LOADING	CONTINGENCY
17WP	00NR	3	'FROM->TO'	G11_042	'MATTHEWSON 345.00 - NORTHWEST 345KV CKT 1'	1195	0.056	140.04	'DBL-MATT-CIM'
13SP	00NR	3	'FROM->TO'	G11_042	'MATTHEWSON 345.00 - NORTHWEST 345KV CKT 1'	1195	0.048	121.59	'DBL-MATT-CIM'
12SP	00NR	3	'FROM->TO'	G11_042	'MATTHEWSON 345.00 - NORTHWEST 345KV CKT 1'	1195	0.046	122.03	'DBL-MATT-CIM'
13WP	00NR	3	'FROM->TO'	G11_042	'MATTHEWSON 345.00 - NORTHWEST 345KV CKT 1'	1195	0.032	101.59	'CIMARRON - MATTHEWSON 345.00 345KV CKT 1'
12WP	00NR	3	'FROM->TO'	G11_042	'MATTHEWSON 345.00 - NORTHWEST 345KV CKT 1'	1195	0.032	101.42	'CIMARRON - MATTHEWSON 345.00 345KV CKT 1'
12G	03ALL	0		G11_043	NCONV-Iteration Limit	0	0.427	9999.00	'DBL-WICH-THI'
12G	03ALL2	0		G11_043	NCONV-Blown Up	0	0.427	9999.00	'DBL-WICH-THI'
12G	03G11_043	0	'TO->FROM'	G11_043	'BENTON - WICHITA 345KV CKT 1'	956	0.218	100.58	'G08-13T 345.00 - WOODRING 345KV CKT 1'
12G	3	0	'TO->FROM'	G11_043	'BENTON - WICHITA 345KV CKT 1'	956	0.205	102.51	'DBL-MATT-TAT'
12G	03G11_043	0	'TO->FROM'	G11_043	'BENTON - WICHITA 345KV CKT 1'	956	0.205	103.96	'DBL-MATT-TAT'
12G	03ALL	0		G11_043	NCONV-Iteration Limit	0	0.134	9999.00	'DBL-MATT-TAT'
12G	03ALL2	0		G11_043	NCONV-Iteration Limit	0	0.134	9999.00	'DBL-MATT-TAT'
12G	03ALL	0		G11_043	NCONV-Iteration Limit	1792	0.060	47.07	'G11-17T 345.00 - POST ROCK 345KV CKT 1'
12G	03ALL	0		G11_043	NCONV-Blown Up	0	0.048	9999.00	'DBL-CIR-RENO'
12G	03ALL2	0		G11_043	NCONV-Blown Up	0	0.048	9999.00	'DBL-CIR-RENO'
12G	03ALL	0		G11_043	NCONV-Iteration Limit	0	0.048	9999.00	'DBL-MULG-CIR'
12G	03ALL2	0		G11_043	NCONV-Iteration Limit	0	0.048	9999.00	'DBL-MULG-CIR'
12G	03ALL	0		G11_043	NCONV-Iteration Limit	0	0.048	9999.00	'DBL-SPRVL-MU'
12G	03ALL2	0		G11_043	NCONV-Iteration Limit	0	0.048	9999.00	'DBL-SPRVL-MU'
12G	03ALL	0		G11_044	NCONV-Iteration Limit	0	0.427	9999.00	'DBL-WICH-THI'
12G	03ALL2	0		G11_044	NCONV-Blown Up	0	0.427	9999.00	'DBL-WICH-THI'
12G	03G11_044	0	'TO->FROM'	G11_044	'BENTON - WICHITA 345KV CKT 1'	956	0.218	100.58	'G08-13T 345.00 - WOODRING 345KV CKT 1'
12G	3	0	'TO->FROM'	G11_044	'BENTON - WICHITA 345KV CKT 1'	956	0.205	102.51	'DBL-MATT-TAT'
12G	03G11_044	0	'TO->FROM'	G11_044	'BENTON - WICHITA 345KV CKT 1'	956	0.205	103.96	'DBL-MATT-TAT'
12G	03ALL	0		G11_044	NCONV-Iteration Limit	0	0.134	9999.00	'DBL-MATT-TAT'
12G	03ALL2	0		G11_044	NCONV-Iteration Limit	0	0.134	9999.00	'DBL-MATT-TAT'
12G	03NR	0	'TO->FROM'	G11_044	'BENTON - WICHITA 345KV CKT 1'	956	0.069	106.57	'G08-13T 345.00 - WOODRING 345KV CKT 1'
12G	03NR	0	'TO->FROM'	G11_044	'BENTON - WICHITA 345KV CKT 1'	956	0.069	104.16	'G08-13T 345.00 - SUMNERCO 345.00 345KV CKT 1'
12SP	00NR	0	'TO->FROM'	G11_044	'BENTON - WICHITA 345KV CKT 1'	956	0.066	100.67	'DBL-MATT-TAT'
12WP	00NR	0	'TO->FROM'	G11_044	'BENTON - WICHITA 345KV CKT 1'	956	0.064	111.25	'GEN532751 1-WOLF CREEK GENERATING STATION UNIT 1'
12WP	00NR	0	'TO->FROM'	G11_044	'BENTON - WICHITA 345KV CKT 1'	956	0.064	108.26	'DBL-MATT-TAT'
17SP	00NR	0	'TO->FROM'	G11_044	'BENTON - WICHITA 345KV CKT 1'	956	0.063	108.74	'GEN532751 1-WOLF CREEK GENERATING STATION UNIT 1'
17WP	00NR	0	'TO->FROM'	G11_044	'BENTON - WICHITA 345KV CKT 1'	956	0.063	106.16	'GEN532751 1-WOLF CREEK GENERATING STATION UNIT 1'
13WP	00NR	0	'TO->FROM'	G11_044	'BENTON - WICHITA 345KV CKT 1'	956	0.062	109.79	'GEN532751 1-WOLF CREEK GENERATING STATION UNIT 1'
13WP	00NR	0	'TO->FROM'	G11_044	'BENTON - WICHITA 345KV CKT 1'	956	0.061	105.51	'DBL-MATT-TAT'
12G	03ALL	0		G11_044	NCONV-Iteration Limit	1792	0.060	47.07	'G11-17T 345.00 - POST ROCK 345KV CKT 1'
12G	03NR	0	'TO->FROM'	G11_044	'BENTON - WICHITA 345KV CKT 1'	956	0.059	105.55	'G11_051T 345.00 - TATONGA7 345.00 345KV CKT 1'
12G	03NR	0	'TO->FROM'	G11_044	'BENTON - WICHITA 345KV CKT 1'	956	0.059	105.14	'G11_051T 345.00 - WOODWARD DISTRICT EHV 345KV CKT 1'
12G	03ALL	0		G11_044	NCONV-Blown Up	0	0.048	9999.00	'DBL-CIR-RENO'
12G	03ALL2	0		G11_044	NCONV-Blown Up	0	0.048	9999.00	'DBL-CIR-RENO'
12G	03ALL	0		G11_044	NCONV-Iteration Limit	0	0.048	9999.00	'DBL-MULG-CIR'
12G	03ALL2	0		G11_044	NCONV-Iteration Limit	0	0.048	9999.00	'DBL-MULG-CIR'
12G	03ALL	0		G11_044	NCONV-Iteration Limit	0	0.048	9999.00	'DBL-SPRVL-MU'
12G	03ALL2	0		G11_044	NCONV-Iteration Limit	0	0.048	9999.00	'DBL-SPRVL-MU'
13SP	00NR	0	'FROM->TO'	G11_044	'HARPER - MILAN TAP 138KV CKT 1'	95.6	0.047	248.87	'DBL-WICH-THI'
13SP	00NR	0	'TO->FROM'	G11_044	'CLEARWATER - MILAN TAP 138KV CKT 1'	100	0.047	224.01	'DBL-WICH-THI'
17WP	00NR	0	'FROM->TO'	G11_044	'HARPER - MILAN TAP 138KV CKT 1'	95.6	0.045	270.66	'DBL-WICH-THI'
17WP	00NR	0	'TO->FROM'	G11_044	'CLEARWATER - MILAN TAP 138KV CKT 1'	100	0.045	248.07	'DBL-WICH-THI'
12SP	00NR	0	'FROM->TO'	G11_044	'FLATRDG3 - HARPER 138KV CKT 1'	110	0.035	172.03	'DBL-WICH-THI'
12SP	00NR	0	'FROM->TO'	G11_044	'HARPER - MILAN TAP 138KV CKT 1'	95.6	0.035	168.59	'DBL-WICH-THI'
12SP	00NR	0	'TO->FROM'	G11_044	'CLEARWATER - MILAN TAP 138KV CKT 1'	100	0.035	148.39	'DBL-WICH-THI'
13SP	00NR	2	'FROM->TO'	G11_044	'HARPER - MILAN TAP 138KV CKT 1'	95.6	0.046	237.72	'DBL-WICH-THI'
13SP	00NR	2	'TO->FROM'	G11_044	'CLEARWATER - MILAN TAP 138KV CKT 1'	100	0.046	213.36	'DBL-WICH-THI'
17WP	00NR	2	'FROM->TO'	G11_044	'HARPER - MILAN TAP 138KV CKT 1'	95.6	0.044	258.59	'DBL-WICH-THI'
17WP	00NR	2	'TO->FROM'	G11_044	'CLEARWATER - MILAN TAP 138KV CKT 1'	100	0.044	236.55	'DBL-WICH-THI'
13WP	00NR	2	'FROM->TO'	G11_044	'HARPER - MILAN TAP 138KV CKT 1'	95.6	0.044	269.67	'DBL-WICH-THI'
13WP	00NR	2	'TO->FROM'	G11_044	'CLEARWATER - MILAN TAP 138KV CKT 1'	100	0.044	247.28	'DBL-WICH-THI'
12SP	00NR	2	'FROM->TO'	G11_044	'FLATRDG3 - HARPER 138KV CKT 1'	110	0.034	165.21	'DBL-WICH-THI'
12SP	00NR	2	'FROM->TO'	G11_044	'HARPER - MILAN TAP 138KV CKT 1'	95.6	0.034	160.76	'DBL-WICH-THI'
12SP	00NR	2	'TO->FROM'	G11_044	'CLEARWATER - MILAN TAP 138KV CKT 1'	100	0.034	140.82	'DBL-WICH-THI'
12G	03NR	2	'FROM->TO'	G11_044	'HARPER - MILAN TAP 138KV CKT 1'	95.6	0.032	198.94	'DBL-WICH-THI'
12G	03NR	2	'FROM->TO'	G11_044	'FLATRDG3 - HARPER 138KV CKT 1'	110	0.032	193.74	'DBL-WICH-THI'
12G	03NR	2	'TO->FROM'	G11_044	'CLEARWATER - MILAN TAP 138KV CKT 1'	100	0.032	180.44	'DBL-WICH-THI'
13SP	00NR	3	'FROM->TO'	G11_044	'HARPER - MILAN TAP 138KV CKT 1'	95.6	0.045	235.98	'DBL-WICH-THI'
13SP	00NR	3	'TO->FROM'	G11_044	'CLEARWATER - MILAN TAP 138KV CKT 1'	100	0.045	211.69	'DBL-WICH-THI'
17WP	00NR	3	'FROM->TO'	G11_044	'HARPER - MILAN TAP 138KV CKT 1'	95.6	0.045	258.51	'DBL-WICH-THI'
17WP	00NR	3	'TO->FROM'	G11_044	'CLEARWATER - MILAN TAP 138KV CKT 1'	100	0.045	236.47	'DBL-WICH-THI'
13WP	00NR	3	'FROM->TO'	G11_044	'HARPER - MILAN TAP 138KV CKT 1'	95.6	0.044	269.07	'DBL-WICH-THI'
13WP	00NR	3	'TO->FROM'	G11_044	'CLEARWATER - MILAN TAP 138KV CKT 1'	100	0.044	246.70	'DBL-WICH-THI'
12SP	00NR	3	'FROM->TO'	G11_044	'FLATRDG3 - HARPER 138KV CKT 1'	110	0.034	164.35	'DBL-WICH-THI'
12SP	00NR	3	'FROM->TO'	G11_044	'HARPER - MILAN TAP 138KV CKT 1'	95.6	0.034	159.79	'DBL-WICH-THI'
12SP	00NR	3	'TO->FROM'	G11_044	'CLEARWATER - MILAN TAP 138KV CKT 1'	100	0.034	139.90	'DBL-WICH-THI'
12G	03NR	3	'FROM->TO'	G11_044	'HARPER - MILAN TAP 138KV CKT 1'	95.6	0.032	198.64	'DBL-WICH-THI'
12G	03NR	3	'FROM->TO'	G11_044	'FLATRDG3 - HARPER 138KV CKT 1'	110	0.032	193.48	'DBL-WICH-THI'
12G	03NR	3	'TO->FROM'	G11_044	'CLEARWATER - MILAN TAP 138KV CKT 1'	100	0.032	180.15	'DBL-WICH-THI'
12G	06G11_045	0	'FROM->TO'	G11_045	'JONES STATION - TUCO INTERCHANGE 230KV CKT 1'	351	0.53983	122.3037	'SUNDOWN INTERCHANGE - WOLFFORTH INTERCHANGE 230KV CKT 1'
12G	06G11_045	0	'FROM->TO'	G11_045	'JONES STATION - TUCO INTERCHANGE 230KV CKT 1'	351	0.51836	117.4727	'LUBBOCK SOUTH INTERCHANGE - WOLFFORTH INTERCHANGE 230KV CKT 1'
12G	06G11_045	0	'FROM->TO'	G11_045	'JONES STATION - TUCO INTERCHANGE 230KV CKT 1'	351	0.49882	118.5297	'LUBBOCK EAST INTERCHANGE - TUCO INTERCHANGE 115KV CKT 1'

SEASON	GROUP	SCENARIO	DIRECTION	SOURCE	MONITORED ELEMENT	RATE B (MVA)	TDF	(%MVA) LOADING	CONTINGENCY
12G	06G11_045	0	'FROM->TO'	G11_045	'JONES STATION - TUCO INTERCHANGE 230KV CKT 1'	351	0.49326	104.8487	'JONES STATION - Jones Station Bus#2 230KV CKT 1'
12G	06G11_045	0	'FROM->TO'	G11_045	'JONES STATION - TUCO INTERCHANGE 230KV CKT 1'	351	0.48983	103.7721	'PLANT X STATION - SUNDOWN INTERCHANGE 230KV CKT 1'
12G	06G11_045	0	'FROM->TO'	G11_045	'JONES STATION - TUCO INTERCHANGE 230KV CKT 1'	351	0.48221	116.9453	'LUBBOCK EAST INTERCHANGE (ENRCO 136162) 230/115/13.2KV TRANSFORMER CKT 1'
12G	06G11_045	0	'FROM->TO'	G11_045	'JONES STATION - TUCO INTERCHANGE 230KV CKT 1'	351	0.48081	119.8264	'Jones Station Bus#2 - LUBBOCK EAST INTERCHANGE 230KV CKT 1'
12G	06G11_045	0	'FROM->TO'	G11_045	'JONES STATION - TUCO INTERCHANGE 230KV CKT 1'	351	0.47637	117.597	'ALLEN SUB - LUBBOCK SOUTH INTERCHANGE 115KV CKT 1'
12G	06G11_045	0	'FROM->TO'	G11_045	'JONES STATION - TUCO INTERCHANGE 230KV CKT 1'	351	0.47637	115.1942	'ALLEN SUB - SOUTH PLAINS REC-QUAKER 115KV CKT 1'
12G	06G11_045	0	'FROM->TO'	G11_045	'JONES STATION - TUCO INTERCHANGE 230KV CKT 1'	351	0.47637	112.2569	'CARLISLE INTERCHANGE - MURPHY SUB 115KV CKT 1'
12G	06G11_045	0	'FROM->TO'	G11_045	'JONES STATION - TUCO INTERCHANGE 230KV CKT 1'	351	0.47637	113.2868	'MURPHY SUB - South Plains REC-Frankford Sub 115KV CKT 1'
12G	06G11_045	0	'FROM->TO'	G11_045	'JONES STATION - TUCO INTERCHANGE 230KV CKT 1'	351	0.47637	114.1803	'SOUTH PLAINS REC-QUAKER - South Plains REC-Frankford Sub 115KV CKT 1'
12G	06G11_045	0	'FROM->TO'	G11_045	'JONES STATION - TUCO INTERCHANGE 230KV CKT 1'	351	0.47537	116.438	'LUBBOCK SOUTH INTERCHANGE (ABB LLM60043) 230/115/13.2KV TRANSFORMER CKT 1'
12G	06G11_045	0	'FROM->TO'	G11_045	'JONES STATION - TUCO INTERCHANGE 230KV CKT 1'	351	0.47511	110.1079	'CARLISLE INTERCHANGE (WH XHS70711) 230/115/13.2KV TRANSFORMER CKT 1'
12G	06G11_045	0	'FROM->TO'	G11_045	'JONES STATION - TUCO INTERCHANGE 230KV CKT 1'	351	0.47301	115.8377	'WOLFFORTH INTERCHANGE (WH 7001668) 230/115/13.2KV TRANSFORMER CKT 1'
12WP	0	0	'FROM->TO'	G11_045	'TUCO INTERCHANGE (GE M1022338) 345/230/13.2KV TRANSFORMER CKT 1'	560	0.471	121.62	'TUCO INTERCHANGE (UPDATE DATA) 345/230/13.2KV TRANSFORMER CKT 2'
12WP	0	0	'FROM->TO'	G11_045	'TUCO INTERCHANGE (GE M1022338) 345/230/13.2KV TRANSFORMER CKT 1'	560	0.471	121.40	'TUCO INTERCHANGE (UPDATE DATA) 345/230/13.2KV TRANSFORMER CKT 2'
13WP	0	0	'FROM->TO'	G11_045	'TUCO INTERCHANGE (GE M1022338) 345/230/13.2KV TRANSFORMER CKT 1'	560	0.470	120.36	'TUCO INTERCHANGE (UPDATE DATA) 345/230/13.2KV TRANSFORMER CKT 2'
13WP	0	0	'FROM->TO'	G11_045	'TUCO INTERCHANGE (GE M1022338) 345/230/13.2KV TRANSFORMER CKT 1'	560	0.470	120.04	'TUCO INTERCHANGE (UPDATE DATA) 345/230/13.2KV TRANSFORMER CKT 2'
12G	06G11_045	0	'FROM->TO'	G11_045	'JONES STATION - TUCO INTERCHANGE 230KV CKT 1'	351	0.46971	102.9884	'GRASSLAND INTERCHANGE - Jones Station Bus#2 230KV CKT 1'
12G	06G11_045	0	'FROM->TO'	G11_045	'JONES STATION - TUCO INTERCHANGE 230KV CKT 1'	351	0.46906	106.055	'CARLISLE INTERCHANGE - LUBBOCK POWER & LIGHT-MILWAUKEE 230KV CKT 1'
12G	06G11_045	0	'FROM->TO'	G11_045	'JONES STATION - TUCO INTERCHANGE 230KV CKT 1'	351	0.46906	112.9619	'LUBBOCK POWER & LIGHT-MILWAUKEE - LUBBOCK POWER & LIGHT-VICKSBURG 69KV CKT 1'
12G	06G11_045	0	'FROM->TO'	G11_045	'JONES STATION - TUCO INTERCHANGE 230KV CKT 1'	351	0.46906	112.9615	'LUBBOCK POWER & LIGHT-MILWAUKEE (M-E C0681251) 230/69/13.5KV TRANSFORMER CKT 1'
12G	06G11_045	0	'FROM->TO'	G11_045	'JONES STATION - TUCO INTERCHANGE 230KV CKT 1'	351	0.46775	110.9759	'JONES STATION - LUBBOCK SOUTH INTERCHANGE 230KV CKT 1'
12G	06G11_045	0	'FROM->TO'	G11_045	'JONES STATION - TUCO INTERCHANGE 230KV CKT 1'	351	0.46643	109.4392	'CROSBY COUNTY INTERCHANGE - LUBBOCK EAST INTERCHANGE 115KV CKT 1'
12G	06G11_045	0	'FROM->TO'	G11_045	'JONES STATION - TUCO INTERCHANGE 230KV CKT 1'	351	0.46643	114.2731	'FLOYD COUNTY INTERCHANGE - G11_025T 115.00 115KV CKT 1'
12G	06G11_045	0	'FROM->TO'	G11_045	'JONES STATION - TUCO INTERCHANGE 230KV CKT 1'	351	0.46553	110.7291	'DEAF SMITH COUNTY INTERCHANGE - PLANT X STATION 230KV CKT 1'
12G	06G11_045	0	'FROM->TO'	G11_045	'JONES STATION - TUCO INTERCHANGE 230KV CKT 1'	351	0.46468	111.1177	'CARLISLE INTERCHANGE - SOUTH PLAINS REC-ERSKINE 115KV CKT 1'
12G	06G11_045	0	'FROM->TO'	G11_045	'JONES STATION - TUCO INTERCHANGE 230KV CKT 1'	351	0.46468	110.5844	'INDIANA SUB - SOUTH PLAINS REC-ERSKINE 115KV CKT 1'
12G	06G11_045	0	'FROM->TO'	G11_045	'JONES STATION - TUCO INTERCHANGE 230KV CKT 1'	351	0.46468	110.9333	'SPP-SWPS-V62'
12G	06G11_045	0	'FROM->TO'	G11_045	'JONES STATION - TUCO INTERCHANGE 230KV CKT 1'	351	0.46459	113.9301	'BORDEN COUNTY INTERCHANGE - G11_058T 230.00 230KV CKT 1'
12G	06G11_045	0	'FROM->TO'	G11_045	'JONES STATION - TUCO INTERCHANGE 230KV CKT 1'	351	0.46459	113.9345	'BORDEN COUNTY INTERCHANGE (ABB LL58862) 230/138/13.2KV TRANSFORMER CKT 1'
12G	06G11_045	0	'FROM->TO'	G11_045	'JONES STATION - TUCO INTERCHANGE 230KV CKT 1'	351	0.46459	106.4986	'CAPROCK REC-MCDONALD - CAPROCK REC-PHILLIPS 138KV CKT 1'
12G	06G11_045	0	'FROM->TO'	G11_045	'JONES STATION - TUCO INTERCHANGE 230KV CKT 1'	351	0.46459	105.8784	'CAPROCK REC-PHILLIPS - CAPROCK REC-TATE 138KV CKT 1'
12G	06G11_045	0	'FROM->TO'	G11_045	'JONES STATION - TUCO INTERCHANGE 230KV CKT 1'	351	0.46459	102.0003	'G11_058T 230.00 - GRASSLAND INTERCHANGE 230KV CKT 1'
12G	06G11_045	0	'FROM->TO'	G11_045	'JONES STATION - TUCO INTERCHANGE 230KV CKT 1'	351	0.46459	105.5961	'HOBBS INTERCHANGE - MIDLAND COUNTY INTERCHANGE 230KV CKT 1'
12G	06G11_045	0	'FROM->TO'	G11_045	'JONES STATION - TUCO INTERCHANGE 230KV CKT 1'	351	0.46459	105.601	'MIDLAND COUNTY INTERCHANGE (ABB LLL58861) 230/138/13.2KV TRANSFORMER CKT 1'
12G	06G11_045	0	'FROM->TO'	G11_045	'JONES STATION - TUCO INTERCHANGE 230KV CKT 1'	351	0.46423	113.1093	'G05-17T 345.00 - Hitchland Interchange 345KV CKT 1'
12G	06G11_045	0	'FROM->TO'	G11_045	'JONES STATION - TUCO INTERCHANGE 230KV CKT 1'	351	0.46423	112.0771	'G05-17T 345.00 - POTTER COUNTY INTERCHANGE 345KV CKT 1'
12G	06G11_045	0	'FROM->TO'	G11_045	'JONES STATION - TUCO INTERCHANGE 230KV CKT 1'	351	0.46423	111.1233	'POTTER COUNTY INTERCHANGE (WAUK 90343-A) 345/230/13.2KV TRANSFORMER CKT 1'
12G	06G11_045	0	'FROM->TO'	G11_045	'JONES STATION - TUCO INTERCHANGE 230KV CKT 1'	351	0.46406	109.8876	'PLANT X STATION - S-RANDLCO 230.00 230KV CKT 1'
12G	06G11_045	0	'FROM->TO'	G11_045	'JONES STATION - TUCO INTERCHANGE 230KV CKT 1'	351	0.46378	110.3698	'POTTER COUNTY INTERCHANGE - S-RANDLCO 230.00 230KV CKT 1'
12G	06G11_045	0	'FROM->TO'	G11_045	'JONES STATION - TUCO INTERCHANGE 230KV CKT 1'	351	0.46377	111.4813	'CARLISLE INTERCHANGE - LP-DOUD_TP 3115.00 115KV CKT 1'
12G	06G11_045	0	'FROM->TO'	G11_045	'JONES STATION - TUCO INTERCHANGE 230KV CKT 1'	351	0.46377	112.6717	'LP-DOUD_TP 3115.00 - YUMA INTERCHANGE 115KV CKT 1'
12G	06G11_045	0	'FROM->TO'	G11_045	'JONES STATION - TUCO INTERCHANGE 230KV CKT 1'	351	0.46377	113.941	'WOLFFORTH INTERCHANGE - YUMA INTERCHANGE 115KV CKT 1'
12G	06G11_045	0	'FROM->TO'	G11_045	'JONES STATION - TUCO INTERCHANGE 230KV CKT 1'	351	0.463	110.5068	'Jones Station Bus#2 - LUBBOCK SOUTH INTERCHANGE 230KV CKT 2'
12G	06G11_045	0	'FROM->TO'	G11_045	'JONES STATION - TUCO INTERCHANGE 230KV CKT 1'	351	0.46299	106.4909	'TOLK STATION WEST - YOAKUM COUNTY INTERCHANGE 230KV CKT 1'
12G	06G11_045	0	'FROM->TO'	G11_045	'JONES STATION - TUCO INTERCHANGE 230KV CKT 1'	351	0.46291	111.3456	'AMOCO SWITCHING STATION - SUNDOWN INTERCHANGE 230KV CKT 1'
12G	06G11_045	0	'FROM->TO'	G11_045	'JONES STATION - TUCO INTERCHANGE 230KV CKT 1'	351	0.46291	107.6	'AMOCO SWITCHING STATION - YOAKUM COUNTY INTERCHANGE 230KV CKT 1'
12G	06G11_045	0	'FROM->TO'	G11_045	'JONES STATION - TUCO INTERCHANGE 230KV CKT 1'	351	0.46242	111.6945	'GRASSLAND INTERCHANGE - WOLFFORTH INTERCHANGE 230KV CKT 1'
12G	06G11_045	0	'FROM->TO'	G11_045	'JONES STATION - TUCO INTERCHANGE 230KV CKT 1'	351	0.4623	109.9488	'BUSHLAND INTERCHANGE - S-RANDLCO 230.00 230KV CKT 1'
12G	06G11_045	0	'FROM->TO'	G11_045	'JONES STATION - TUCO INTERCHANGE 230KV CKT 1'	351	0.46109	107.0763	'HOCKLEY COUNTY INTERCHANGE - LAMB COUNTY INTERCHANGE 115KV CKT 1'
12G	06G11_045	0	'FROM->TO'	G11_045	'JONES STATION - TUCO INTERCHANGE 230KV CKT 1'	351	0.46059	109.4253	'BUSHLAND INTERCHANGE - POTTER COUNTY INTERCHANGE 230KV CKT 1'
12G	06G11_045	0	'FROM->TO'	G11_045	'JONES STATION - TUCO INTERCHANGE 230KV CKT 1'	351	0.46048	109.8123	'CAPROCK REC-GRADY - CAPROCK REC-REED 138KV CKT 1'
12G	06G11_045	0	'FROM->TO'	G11_045	'JONES STATION - TUCO INTERCHANGE 230KV CKT 1'	351	0.46048	109.478	'CAPROCK REC-GRADY - CAPROCK REC-TRIANGLE 138KV CKT 1'
12G	06G11_045	0	'FROM->TO'	G11_045	'JONES STATION - TUCO INTERCHANGE 230KV CKT 1'	351	0.46048	109.9285	'CAPROCK REC-KOCH - CAPROCK REC-REED 138KV CKT 1'
12G	06G11_045	0	'FROM->TO'	G11_045	'JONES STATION - TUCO INTERCHANGE 230KV CKT 1'	351	0.46048	109.9653	'CAPROCK REC-KOCH - CAPROCK REC-VEALMOOR 138KV CKT 1'
12G	06G11_045	0	'FROM->TO'	G11_045	'JONES STATION - TUCO INTERCHANGE 230KV CKT 1'	351	0.45984	110.5346	'SPP-SWPS-03'
12G	06G11_045	0	'FROM->TO'	G11_045	'JONES STATION - TUCO INTERCHANGE 230KV CKT 1'	351	0.45977	110.9114	'ELK CITY 230KV - SWEETWATER 230KV CKT 1'
12G	06G11_045	0	'FROM->TO'	G11_045	'JONES STATION - TUCO INTERCHANGE 230KV CKT 1'	351	0.45977	110.9112	'ELK CITY 230KV (ELKCTY-6) 230/138/13.8KV TRANSFORMER CKT 1'
12G	06G11_045	0	'FROM->TO'	G11_045	'JONES STATION - TUCO INTERCHANGE 230KV CKT 1'	351	0.45977	110.2747	'GRAPEVINE INTERCHANGE - STATELINE INTERCHANGE 230KV CKT 1'
12G	06G11_045	0	'FROM->TO'	G11_045	'JONES STATION - TUCO INTERCHANGE 230KV CKT 1'	351	0.45977	109.9642	'SPP-SWPS-02'
12G	06G11_045	0	'FROM->TO'	G11_045	'JONES STATION - TUCO INTERCHANGE 230KV CKT 1'	351	0.45977	109.9741	'SPP-SWPS-02A'
12G	06G11_045	0	'FROM->TO'	G11_045	'JONES STATION - TUCO INTERCHANGE 230KV CKT 1'	351	0.45977	109.9642	'STATELINE INTERCHANGE - STLN-DEMARC6 230KV CKT 1'
12G	06G11_045	0	'FROM->TO'	G11_045	'JONES STATION - TUCO INTERCHANGE 230KV CKT 1'	351	0.45977	109.9623	'STLN-DEMARC6 - SWEETWATER 230KV CKT 1'
12WP	0	0	'FROM->TO'	G11_045	'TUCO INTERCHANGE (UPDATE DATA) 345/230/13.2KV TRANSFORMER CKT 2'	560	0.460	118.80	'TUCO INTERCHANGE (GE M1022338) 345/230/13.2KV TRANSFORMER CKT 1'
12WP	0	0	'FROM->TO'	G11_045	'TUCO INTERCHANGE (UPDATE DATA) 345/230/13.2KV TRANSFORMER CKT 2'	560	0.460	118.70	'TUCO INTERCHANGE (GE M1022338) 345/230/13.2KV TRANSFORMER CKT 1'
12G	06G11_045	0	'FROM->TO'	G11_045	'JONES STATION - TUCO INTERCHANGE 230KV CKT 1'	351	0.4594	110.3231	'SUNDOWN INTERCHANGE (WH XDS70381) 230/115/13.8KV TRANSFORMER CKT 1'
12G	06G11_045	0	'FROM->TO'	G11_045	'JONES STATION - TUCO INTERCHANGE 230KV CKT 1'	351	0.45921	104.3273	'CHAVESCO 345.00 - EDDY COUNTY INTERCHANGE 345KV CKT 1'
12G	06G11_045	0	'FROM->TO'	G11_045	'JONES STATION - TUCO INTERCHANGE 230KV CKT 1'	351	0.45921	110.5373	'CHAVESCO 345.00 - TOLK STATION 345KV CKT 1'
12G	06G11_045	0	'FROM->TO'	G11_045	'JONES STATION - TUCO INTERCHANGE 230KV CKT 1'	351	0.45921	104.3297	'EDDY COUNTY INTERCHANGE (ABB AEM30711) 345/230/13.2KV TRANSFORMER CKT 1'
12G	06G11_045	0	'FROM->TO'	G11_045	'JONES STATION - TUCO INTERCHANGE 230KV CKT 1'	351	0.45921	110.5295	'TOLK STATION (ABBXNL844501) 345/230/13.2KV TRANSFORMER CKT 1'
12G	06G11_045	0	'FROM->TO'	G11_045	'JONES STATION - TUCO INTERCHANGE 230KV CKT 1'	351	0.45884	110.0882	'GRAPEVINE INTERCHANGE - NICHOLS STATION 230KV CKT 1'
12G	06G11_045	0	'FROM->TO'	G11_045	'JONES STATION - TUCO INTERCHANGE 230KV CKT 1'	351	0.45884	109.4573	'MOORE COUNTY INTERCHANGE - POTTER COUNTY INTERCHANGE 230KV CKT 1'
13WP	0	0	'FROM->TO'	G11_045	'TUCO INTERCHANGE (UPDATE DATA) 345/230/13.2KV TRANSFORMER CKT 2'	560	0.459	117.56	'TUCO INTERCHANGE (GE M1022338) 345/230/13.2KV TRANSFORMER CKT 1'
13WP	0	0	'FROM->TO'	G11_045	'TUCO INTERCHANGE (UPDATE DATA) 345/230/13.2KV TRANSFORMER CKT 2'	560	0.459	117.39	'TUCO INTERCHANGE (GE M1022338) 345/230/13.2KV TRANSFORMER CKT 1'
12G	06G11_045	0	'FROM->TO'	G11_045	'JONES STATION - TUCO INTERCHANGE 230KV CKT 1'	351	0.45863	110.4889	'Jones Station Bus#2 - LUBBOCK POWER & LIGHT-HOLLY PLANT 230KV CKT 1'
12G	06G11_045	0	'FROM->TO'	G11_045	'JONES STATION - TUCO INTERCHANGE 230KV CKT 1'	351	0.45843	109.4582	'Hitchland Interchange - WOODWARD DISTRICT EHV 345KV CKT 2'
12G	06G11_045	0	'FROM->TO'	G11_045	'JONES STATION - TUCO INTERCHANGE 230KV CKT 1'	351	0.45832	106.9304	'CHAVES COUNTY INTERCHANGE - SAN JUAN MESA TAP 230KV CKT 1'
12G	06G11_045	0	'FROM->TO'	G11_045	'JONES STATION - TUCO INTERCHANGE 230KV CKT 1'	351	0.45832	110.5734	'OASIS INTERCHANGE - SAN JUAN MESA TAP 230KV CKT 1'
12G	06G11_045	0	'FROM->TO'	G11_045	'JONES STATION - TUCO INTERCHANGE 230KV CKT 1'	351	0.45828	109.4515	'CAPROCK REC-RUSSEL TAP - CAPROCK REC-VEALMOOR 138KV CKT 1'

SEASON	GROUP	SCENARIO	DIRECTION	SOURCE	MONITORED ELEMENT	RATE B (MVA)	TDF	(%MVA) LOADING	CONTINGENCY
12G	06G11_045	0	'FROM->TO'	G11_045	'JONES STATION - TUCO INTERCHANGE 230KV CKT 1'	351	0.4581	109.8655	'GRASSLAND INTERCHANGE - LYNN COUNTY INTERCHANGE 115KV CKT 1'
12G	06G11_045	0	'FROM->TO'	G11_045	'JONES STATION - TUCO INTERCHANGE 230KV CKT 1'	351	0.4581	109.4575	'GRASSLAND INTERCHANGE (PENN 0105951) 230/115/13.2KV TRANSFORMER CKT 1'
12G	06G11_045	0	'FROM->TO'	G11_045	'JONES STATION - TUCO INTERCHANGE 230KV CKT 1'	351	0.4581	110.3066	'SPP-SWPS-V33'
12G	06G11_045	0	'FROM->TO'	G11_045	'JONES STATION - TUCO INTERCHANGE 230KV CKT 1'	351	0.45805	109.9831	'LUBBOCK POWER & LIGHT-SOUTHEAST - LUBBOCK SOUTH INTERCHANGE 230KV CKT 1'
12G	06G11_045	0	'FROM->TO'	G11_045	'JONES STATION - TUCO INTERCHANGE 230KV CKT 1'	351	0.45802	109.6933	'LUBBOCK EAST INTERCHANGE - LUBBOCK POWER & LIGHT-WADSWORTH 230KV CKT 1'
12G	06G11_045	0	'FROM->TO'	G11_045	'JONES STATION - TUCO INTERCHANGE 230KV CKT 1'	351	0.45799	109.8734	'HOBBS INTERCHANGE - LEA COUNTY INTERCHANGE 230KV CKT 1'
12G	06G11_045	0	'FROM->TO'	G11_045	'JONES STATION - TUCO INTERCHANGE 230KV CKT 1'	351	0.45799	107.3619	'LAMB COUNTY INTERCHANGE - TOLK STATION WEST 230KV CKT 1'
12G	06G11_045	0	'FROM->TO'	G11_045	'JONES STATION - TUCO INTERCHANGE 230KV CKT 1'	351	0.45799	107.3433	'LAMB COUNTY INTERCHANGE (WH ALM20172) 230/115/13.2KV TRANSFORMER CKT 1'
12G	06G11_045	0	'FROM->TO'	G11_045	'JONES STATION - TUCO INTERCHANGE 230KV CKT 1'	351	0.45794	109.9974	'TOLK STATION EAST - TOLK STATION TAP 230KV CKT 1'
12G	06G11_045	0	'FROM->TO'	G11_045	'JONES STATION - TUCO INTERCHANGE 230KV CKT 1'	351	0.45755	109.4518	'SPP-SWPS-T89'
12G	06G11_045	0	'FROM->TO'	G11_045	'JONES STATION - TUCO INTERCHANGE 230KV CKT 1'	351	0.45748	110.1662	'SPP-SWPS-V49'
12G	06G11_045	0	'FROM->TO'	G11_045	'JONES STATION - TUCO INTERCHANGE 230KV CKT 1'	351	0.45747	109.4819	'SPP-SWPS-T14'
12G	06G11_045	0	'FROM->TO'	G11_045	'JONES STATION - TUCO INTERCHANGE 230KV CKT 1'	351	0.45747	109.6548	'SPP-SWPS-V55'
12G	06G11_045	0	'FROM->TO'	G11_045	'JONES STATION - TUCO INTERCHANGE 230KV CKT 1'	351	0.45746	119.4343	'BASE CASE'
12G	06G11_045	0	'FROM->TO'	G11_045	'JONES STATION - TUCO INTERCHANGE 230KV CKT 1'	351	0.45746	109.6192	'GEN334440 1-SABINE UNIT 4'
12G	06G11_045	0	'FROM->TO'	G11_045	'JONES STATION - TUCO INTERCHANGE 230KV CKT 1'	351	0.45746	109.4723	'GEN334441 1-SABINE UNIT 5'
12G	06G11_045	0	'FROM->TO'	G11_045	'JONES STATION - TUCO INTERCHANGE 230KV CKT 1'	351	0.45746	109.645	'GEN335204 1-NELSON UNIT 4'
12G	06G11_045	0	'FROM->TO'	G11_045	'JONES STATION - TUCO INTERCHANGE 230KV CKT 1'	351	0.45746	109.7069	'GEN335206 1-NELSON UNIT 6'
12G	06G11_045	0	'FROM->TO'	G11_045	'JONES STATION - TUCO INTERCHANGE 230KV CKT 1'	351	0.45746	110.8715	'GEN335831 1-RIVERBEND UNIT#1'
12G	06G11_045	0	'FROM->TO'	G11_045	'JONES STATION - TUCO INTERCHANGE 230KV CKT 1'	351	0.45746	111.2141	'GEN336153 1-WATERFORD UNIT#3'
12G	06G11_045	0	'FROM->TO'	G11_045	'JONES STATION - TUCO INTERCHANGE 230KV CKT 1'	351	0.45746	110.0106	'GEN336251 1-NINEMILE POINT UNIT#4'
12G	06G11_045	0	'FROM->TO'	G11_045	'JONES STATION - TUCO INTERCHANGE 230KV CKT 1'	351	0.45746	109.543	'GEN336801 1-BAXTER WILSON UNIT #1'
12G	06G11_045	0	'FROM->TO'	G11_045	'JONES STATION - TUCO INTERCHANGE 230KV CKT 1'	351	0.45746	111.4738	'GEN336821 1-GRAND GULF UNIT'
12G	06G11_045	0	'FROM->TO'	G11_045	'JONES STATION - TUCO INTERCHANGE 230KV CKT 1'	351	0.45746	109.8282	'GEN336831 1-BAXTER WILSON SES'
12G	06G11_045	0	'FROM->TO'	G11_045	'JONES STATION - TUCO INTERCHANGE 230KV CKT 1'	351	0.45746	110.0194	'GEN337041 1-GERALD ANDRUS'
12G	06G11_045	0	'FROM->TO'	G11_045	'JONES STATION - TUCO INTERCHANGE 230KV CKT 1'	351	0.45746	110.3266	'GEN337652 1-WHITE BLUFF UNIT #1'
12G	06G11_045	0	'FROM->TO'	G11_045	'JONES STATION - TUCO INTERCHANGE 230KV CKT 1'	351	0.45746	110.18	'GEN337653 1-WHITE BLUFF UNIT #2'
12G	06G11_045	0	'FROM->TO'	G11_045	'JONES STATION - TUCO INTERCHANGE 230KV CKT 1'	351	0.45746	110.4987	'GEN337910 1-ARKANSAS NUCLEAR ONE UNIT #1'
12G	06G11_045	0	'FROM->TO'	G11_045	'JONES STATION - TUCO INTERCHANGE 230KV CKT 1'	351	0.45746	110.877	'GEN337911 1-ARKANSAS NUCLEAR ONE UNIT #2'
12G	06G11_045	0	'FROM->TO'	G11_045	'JONES STATION - TUCO INTERCHANGE 230KV CKT 1'	351	0.45746	110.3471	'GEN338143 1-INDEPENDENCE UNIT #1'
12G	06G11_045	0	'FROM->TO'	G11_045	'JONES STATION - TUCO INTERCHANGE 230KV CKT 1'	351	0.45746	110.3631	'GEN338146 1-INDEPENDENCE UNIT #2'
12G	06G11_045	0	'FROM->TO'	G11_045	'JONES STATION - TUCO INTERCHANGE 230KV CKT 1'	351	0.45746	109.92	'GEN338388 1-1PLUMPT 23.000'
12G	06G11_045	0	'FROM->TO'	G11_045	'JONES STATION - TUCO INTERCHANGE 230KV CKT 1'	351	0.45746	110.0279	'GEN501801 1-DOLET HILLS UNIT1'
12G	06G11_045	0	'FROM->TO'	G11_045	'JONES STATION - TUCO INTERCHANGE 230KV CKT 1'	351	0.45746	109.7106	'GEN501812 1-RODEMACHER UNIT 2'
12G	06G11_045	0	'FROM->TO'	G11_045	'JONES STATION - TUCO INTERCHANGE 230KV CKT 1'	351	0.45746	109.878	'GEN501813 1-RODEMACHER UNIT 3'
12G	06G11_045	0	'FROM->TO'	G11_045	'JONES STATION - TUCO INTERCHANGE 230KV CKT 1'	351	0.45746	109.4683	'GEN509394 1-FLINT CREEK'
12G	06G11_045	0	'FROM->TO'	G11_045	'JONES STATION - TUCO INTERCHANGE 230KV CKT 1'	351	0.45746	109.7884	'GEN509403 1-PIRKEY GENERATION'
12G	06G11_045	0	'FROM->TO'	G11_045	'JONES STATION - TUCO INTERCHANGE 230KV CKT 1'	351	0.45746	109.5245	'GEN509404 1-WELSH #1'
12G	06G11_045	0	'FROM->TO'	G11_045	'JONES STATION - TUCO INTERCHANGE 230KV CKT 1'	351	0.45746	109.5245	'GEN509405 1-WELSH #2'
12G	06G11_045	0	'FROM->TO'	G11_045	'JONES STATION - TUCO INTERCHANGE 230KV CKT 1'	351	0.45746	109.5245	'GEN509406 1-WELSH #3'
12G	06G11_045	0	'FROM->TO'	G11_045	'JONES STATION - TUCO INTERCHANGE 230KV CKT 1'	351	0.45746	109.6932	'GEN509416 1-TURK GENERATION'
12G	06G11_045	0	'FROM->TO'	G11_045	'JONES STATION - TUCO INTERCHANGE 230KV CKT 1'	351	0.45746	109.4827	'GEN512688 2-GRDA1 GSU2 22'
12G	06G11_045	0	'FROM->TO'	G11_045	'JONES STATION - TUCO INTERCHANGE 230KV CKT 1'	351	0.45746	109.5129	'GEN514805 1-SOONER UNIT 1'
12G	06G11_045	0	'FROM->TO'	G11_045	'JONES STATION - TUCO INTERCHANGE 230KV CKT 1'	351	0.45746	107.5421	'TUCO INTERCHANGE 230/13.0KV TRANSFORMER CKT 1'
12G	06G11_045	0	'FROM->TO'	G11_045	'JONES STATION - TUCO INTERCHANGE 230KV CKT 1'	351	0.45739	109.8593	'PLANT X STATION (WH ALM20171) 230/115/13.2KV TRANSFORMER CKT 1'
12G	06G11_045	0	'FROM->TO'	G11_045	'JONES STATION - TUCO INTERCHANGE 230KV CKT 1'	351	0.45438	107.5272	'TUCO INTERCHANGE (UPDATE DATA) 345/230/13.2KV TRANSFORMER CKT 2'
12G	06G11_045	0	'FROM->TO'	G11_045	'JONES STATION - TUCO INTERCHANGE 230KV CKT 1'	351	0.45404	106.9088	'BORDER 7345.00 - WOODWARD DISTRICT EHV 345KV CKT 1'
12G	06G11_045	0	'FROM->TO'	G11_045	'JONES STATION - TUCO INTERCHANGE 230KV CKT 1'	351	0.45268	107.5103	'TUCO INTERCHANGE (GE M1022338) 345/230/13.2KV TRANSFORMER CKT 1'
12G	06G11_045	0	'FROM->TO'	G11_045	'JONES STATION - TUCO INTERCHANGE 230KV CKT 1'	351	0.44768	107.0018	'AMARILLO SOUTH INTERCHANGE - G07-48T 230.00 230KV CKT 1'
12G	06G11_045	0	'FROM->TO'	G11_045	'JONES STATION - TUCO INTERCHANGE 230KV CKT 1'	351	0.44744	124.8019	'TOLK STATION EAST - TUCO INTERCHANGE 230KV CKT 1'
12G	06G11_045	0	'FROM->TO'	G11_045	'JONES STATION - TUCO INTERCHANGE 230KV CKT 1'	351	0.446	108.98	'TOLK STATION EAST - TUCO INTERCHANGE 230KV CKT 1'
12WP	0	0	'FROM->TO'	G11_045	'JONES STATION - TUCO INTERCHANGE 230KV CKT 1'	361	0.442	102.83	'TOLK STATION EAST - TUCO INTERCHANGE 230KV CKT 1'
13WP	0	0	'FROM->TO'	G11_045	'JONES STATION - TUCO INTERCHANGE 230KV CKT 1'	361	0.441	105.25	'TOLK STATION EAST - TUCO INTERCHANGE 230KV CKT 1'
12G	06G11_045	0	'FROM->TO'	G11_045	'JONES STATION - TUCO INTERCHANGE 230KV CKT 1'	351	0.43804	101.477	'G05-15T 345.00 - TUCO INTERCHANGE 345KV CKT 1'
12G	06G11_045	0	'FROM->TO'	G11_045	'JONES STATION - TUCO INTERCHANGE 230KV CKT 1'	351	0.43671	103.3419	'BORDER 7345.00 - TUCO INTERCHANGE 345KV CKT 1'
12G	06NR	0	'FROM->TO'	G11_045	'JONES STATION - TUCO INTERCHANGE 230KV CKT 1'	351	0.431	102.36	'SUNDOWN INTERCHANGE - WOLFFORTH INTERCHANGE 230KV CKT 1'
12G	06NR	0	'FROM->TO'	G11_045	'JONES STATION - TUCO INTERCHANGE 230KV CKT 1'	351	0.42613	131.4012	'SUNDOWN INTERCHANGE - WOLFFORTH INTERCHANGE 230KV CKT 1'
12G	06NR	0	'FROM->TO'	G11_045	'JONES STATION - TUCO INTERCHANGE 230KV CKT 1'	351	0.397	101.12	'LUBBOCK SOUTH INTERCHANGE - WOLFFORTH INTERCHANGE 230KV CKT 1'
12G	06NR	0	'FROM->TO'	G11_045	'JONES STATION - TUCO INTERCHANGE 230KV CKT 1'	351	0.3934	127.426	'LUBBOCK SOUTH INTERCHANGE - WOLFFORTH INTERCHANGE 230KV CKT 1'
12G	06NR	0	'FROM->TO'	G11_045	'JONES STATION - TUCO INTERCHANGE 230KV CKT 1'	351	0.36174	116.3455	'JONES STATION - Jones Station Bus#2 230KV CKT 1'
12G	06NR	0	'FROM->TO'	G11_045	'JONES STATION - TUCO INTERCHANGE 230KV CKT 1'	351	0.352	108.99	'LUBBOCK EAST INTERCHANGE - TUCO INTERCHANGE 115KV CKT 1'
12G	06NR	0	'FROM->TO'	G11_045	'JONES STATION - TUCO INTERCHANGE 230KV CKT 1'	351	0.3484	132.4127	'LUBBOCK EAST INTERCHANGE - TUCO INTERCHANGE 115KV CKT 1'
12G	06NR	0	'FROM->TO'	G11_045	'JONES STATION - TUCO INTERCHANGE 230KV CKT 1'	351	0.34671	118.2301	'PLANT X STATION - SUNDOWN INTERCHANGE 230KV CKT 1'
12G	06NR	0	'FROM->TO'	G11_045	'JONES STATION - TUCO INTERCHANGE 230KV CKT 1'	351	0.342	107.01	'LUBBOCK EAST INTERCHANGE (ENRCO 136162) 230/115/13.2KV TRANSFORMER CKT 1'
12G	06NR	0	'FROM->TO'	G11_045	'JONES STATION - TUCO INTERCHANGE 230KV CKT 1'	351	0.341	109.76	'Jones Station Bus#2 - LUBBOCK EAST INTERCHANGE 230KV CKT 1'
12G	06NR	0	'FROM->TO'	G11_045	'JONES STATION - TUCO INTERCHANGE 230KV CKT 1'	351	0.33854	129.9134	'LUBBOCK EAST INTERCHANGE (ENRCO 136162) 230/115/13.2KV TRANSFORMER CKT 1'
12G	06NR	0	'FROM->TO'	G11_045	'JONES STATION - TUCO INTERCHANGE 230KV CKT 1'	351	0.338	108.19	'ALLEN SUB - LUBBOCK SOUTH INTERCHANGE 115KV CKT 1'
12G	06NR	0	'FROM->TO'	G11_045	'JONES STATION - TUCO INTERCHANGE 230KV CKT 1'	351	0.338	105.63	'ALLEN SUB - SOUTH PLAINS REC-QUAKER 115KV CKT 1'
12G	06NR	0	'FROM->TO'	G11_045	'JONES STATION - TUCO INTERCHANGE 230KV CKT 1'	351	0.338	104.61	'SOUTH PLAINS REC-QUAKER - South Plains REC-Frankford Sub 115KV CKT 1'
12G	06NR	0	'FROM->TO'	G11_045	'JONES STATION - TUCO INTERCHANGE 230KV CKT 1'	351	0.338	103.70	'MURPHY SUB - South Plains REC-Frankford Sub 115KV CKT 1'
12G	06NR	0	'FROM->TO'	G11_045	'JONES STATION - TUCO INTERCHANGE 230KV CKT 1'	351	0.338	102.65	'CARLISLE INTERCHANGE - MURPHY SUB 115KV CKT 1'
12G	06NR	0	'FROM->TO'	G11_045	'JONES STATION - TUCO INTERCHANGE 230KV CKT 1'	351	0.33826	132.8179	'Jones Station Bus#2 - LUBBOCK EAST INTERCHANGE 230KV CKT 1'
12G	06NR	0	'FROM->TO'	G11_045	'JONES STATION - TUCO INTERCHANGE 230KV CKT 1'	351	0.336	106.24	'WOLFFORTH INTERCHANGE (WH 7001668) 230/115/13.2KV TRANSFORMER CKT 1'
12G	06NR	0	'FROM->TO'	G11_045	'JONES STATION - TUCO INTERCHANGE 230KV CKT 1'	351	0.336	106.66	'LUBBOCK SOUTH INTERCHANGE (ABB LLM60043) 230/115/13.2KV TRANSFORMER CKT 1'
12G	06NR	0	'FROM->TO'	G11_045	'JONES STATION - TUCO INTERCHANGE 230KV CKT 1'	351	0.33525	130.5194	'ALLEN SUB - LUBBOCK SOUTH INTERCHANGE 115KV CKT 1'
12G	06NR	0	'FROM->TO'	G11_045	'JONES STATION - TUCO INTERCHANGE 230KV CKT 1'	351	0.33525	127.9671	'ALLEN SUB - SOUTH PLAINS REC-QUAKER 115KV CKT 1'
12G	06NR	0	'FROM->TO'	G11_045	'JONES STATION - TUCO INTERCHANGE 230KV CKT 1'	351	0.33525	124.9653	'CARLISLE INTERCHANGE - MURPHY SUB 115KV CKT 1'
12G	06NR	0	'FROM->TO'	G11_045	'JONES STATION - TUCO INTERCHANGE 230KV CKT 1'	351	0.33525	126.0111	'MURPHY SUB - South Plains REC-Frankford Sub 115KV CKT 1'

SEASON	GROUP	SCENARIO	DIRECTION	SOURCE	MONITORED ELEMENT	RATE B (MVA)	TDF	(%MVA) LOADING	CONTINGENCY
12G	06NR	0	'FROM->TO'	G11_045	'JONES STATION - TUCO INTERCHANGE 230KV CKT 1'	351	0.33525	126.9232	'SOUTH PLAINS REC-QUAKER - South Plains REC-Frankford Sub 115KV CKT 1'
12G	06NR	0	'FROM->TO'	G11_045	'JONES STATION - TUCO INTERCHANGE 230KV CKT 1'	351	0.3344	113.9897	'GRASSLAND INTERCHANGE - Jones Station Bus#2 230KV CKT 1'
12G	06NR	0	'FROM->TO'	G11_045	'JONES STATION - TUCO INTERCHANGE 230KV CKT 1'	351	0.33413	122.7637	'CARLISLE INTERCHANGE - TUCO INTERCHANGE 230KV CKT 1'
12G	06NR	0	'FROM->TO'	G11_045	'JONES STATION - TUCO INTERCHANGE 230KV CKT 1'	351	0.334	100.69	'AMOCO SWITCHING STATION - SUNDOWN INTERCHANGE 230KV CKT 1'
12G	06NR	0	'FROM->TO'	G11_045	'JONES STATION - TUCO INTERCHANGE 230KV CKT 1'	351	0.334	104.12	'BORDEN COUNTY INTERCHANGE (ABB LL58862) 230/138/13.2KV TRANSFORMER CKT 1'
12G	06NR	0	'FROM->TO'	G11_045	'JONES STATION - TUCO INTERCHANGE 230KV CKT 1'	351	0.334	104.12	'BORDEN COUNTY INTERCHANGE - G11_058T 230.00 230KV CKT 1'
12G	06NR	0	'FROM->TO'	G11_045	'JONES STATION - TUCO INTERCHANGE 230KV CKT 1'	351	0.334	101.33	'JONES STATION - LUBBOCK SOUTH INTERCHANGE 230KV CKT 1'
12G	06NR	0	'FROM->TO'	G11_045	'JONES STATION - TUCO INTERCHANGE 230KV CKT 1'	351	0.33318	129.3761	'LUBBOCK SOUTH INTERCHANGE (ABB LLM60043) 230/115/13.2KV TRANSFORMER CKT 1'
12G	06NR	0	'FROM->TO'	G11_045	'JONES STATION - TUCO INTERCHANGE 230KV CKT 1'	351	0.33315	128.4789	'WOLFFORTH INTERCHANGE (WH 7001668) 230/115/13.2KV TRANSFORMER CKT 1'
12G	06NR	0	'FROM->TO'	G11_045	'JONES STATION - TUCO INTERCHANGE 230KV CKT 1'	351	0.33127	122.4623	'AMOCO SWITCHING STATION - SUNDOWN INTERCHANGE 230KV CKT 1'
12G	06NR	0	'FROM->TO'	G11_045	'JONES STATION - TUCO INTERCHANGE 230KV CKT 1'	351	0.33127	118.6525	'AMOCO SWITCHING STATION - YOAKUM COUNTY INTERCHANGE 230KV CKT 1'
12G	06NR	0	'FROM->TO'	G11_045	'JONES STATION - TUCO INTERCHANGE 230KV CKT 1'	351	0.33103	126.1475	'BORDEN COUNTY INTERCHANGE - G11_058T 230.00 230KV CKT 1'
12G	06NR	0	'FROM->TO'	G11_045	'JONES STATION - TUCO INTERCHANGE 230KV CKT 1'	351	0.33103	126.1518	'BORDEN COUNTY INTERCHANGE (ABB LL58862) 230/138/13.2KV TRANSFORMER CKT 1'
12G	06NR	0	'FROM->TO'	G11_045	'JONES STATION - TUCO INTERCHANGE 230KV CKT 1'	351	0.33103	118.6959	'CAPROCK REC-MCDONALD - CAPROCK REC-PHILLIPS 138KV CKT 1'
12G	06NR	0	'FROM->TO'	G11_045	'JONES STATION - TUCO INTERCHANGE 230KV CKT 1'	351	0.33103	118.0698	'CAPROCK REC-PHILLIPS - CAPROCK REC-TATE 138KV CKT 1'
12G	06NR	0	'FROM->TO'	G11_045	'JONES STATION - TUCO INTERCHANGE 230KV CKT 1'	351	0.33103	117.787	'HOBBS INTERCHANGE - MIDLAND COUNTY INTERCHANGE 230KV CKT 1'
12G	06NR	0	'FROM->TO'	G11_045	'JONES STATION - TUCO INTERCHANGE 230KV CKT 1'	351	0.33103	117.7914	'MIDLAND COUNTY INTERCHANGE (ABB LLL58861) 230/138/13.2KV TRANSFORMER CKT 1'
12G	06NR	0	'FROM->TO'	G11_045	'JONES STATION - TUCO INTERCHANGE 230KV CKT 1'	351	0.33052	123.2713	'JONES STATION - LUBBOCK SOUTH INTERCHANGE 230KV CKT 1'
12G	06NR	0	'FROM->TO'	G11_045	'JONES STATION - TUCO INTERCHANGE 230KV CKT 1'	351	0.330	103.87	'LUBBOCK POWER & LIGHT-MILWAUKEE (M-E C0681251) 230/69/13.5KV TRANSFORMER CKT 1'
12G	06NR	0	'FROM->TO'	G11_045	'JONES STATION - TUCO INTERCHANGE 230KV CKT 1'	351	0.330	103.86	'LUBBOCK POWER & LIGHT-MILWAUKEE - LUBBOCK POWER & LIGHT-VICKSBURG 69KV CKT 1'
12G	06NR	0	'FROM->TO'	G11_045	'JONES STATION - TUCO INTERCHANGE 230KV CKT 1'	351	0.329	105.29	'FLOYD COUNTY INTERCHANGE - G11_025T 115.00 115KV CKT 1'
12G	06NR	0	'FROM->TO'	G11_045	'JONES STATION - TUCO INTERCHANGE 230KV CKT 1'	351	0.329	102.07	'CARLISLE INTERCHANGE (WH XHS70711) 230/115/13.2KV TRANSFORMER CKT 1'
12G	06NR	0	'FROM->TO'	G11_045	'JONES STATION - TUCO INTERCHANGE 230KV CKT 1'	351	0.328	100.97	'Jones Station Bus#2 - LUBBOCK SOUTH INTERCHANGE 230KV CKT 2'
12G	06NR	0	'FROM->TO'	G11_045	'JONES STATION - TUCO INTERCHANGE 230KV CKT 1'	351	0.328	102.39	'GRASSLAND INTERCHANGE - WOLFFORTH INTERCHANGE 230KV CKT 1'
12G	06NR	0	'FROM->TO'	G11_045	'JONES STATION - TUCO INTERCHANGE 230KV CKT 1'	351	0.327	100.73	'CAPROCK REC-KOCH - CAPROCK REC-VEALMOOR 138KV CKT 1'
12G	06NR	0	'FROM->TO'	G11_045	'JONES STATION - TUCO INTERCHANGE 230KV CKT 1'	351	0.327	100.70	'CAPROCK REC-KOCH - CAPROCK REC-REED 138KV CKT 1'
17SP	00NR	0	'FROM->TO'	G11_045	'Jones Station Bus#2 - LUBBOCK SOUTH INTERCHANGE 230KV CKT 2'	351	0.327	103.17	'JONES STATION - LUBBOCK SOUTH INTERCHANGE 230KV CKT 1'
12G	06NR	0	'FROM->TO'	G11_045	'JONES STATION - TUCO INTERCHANGE 230KV CKT 1'	351	0.3265	118.7505	'CARLISLE INTERCHANGE - LUBBOCK POWER & LIGHT-MILWAUKEE 230KV CKT 1'
12G	06NR	0	'FROM->TO'	G11_045	'JONES STATION - TUCO INTERCHANGE 230KV CKT 1'	351	0.3265	125.8271	'LUBBOCK POWER & LIGHT-MILWAUKEE - LUBBOCK POWER & LIGHT-VICKSBURG 69KV CKT 1'
12G	06NR	0	'FROM->TO'	G11_045	'JONES STATION - TUCO INTERCHANGE 230KV CKT 1'	351	0.3265	125.8313	'LUBBOCK POWER & LIGHT-MILWAUKEE (M-E C0681251) 230/69/13.5KV TRANSFORMER CKT 1'
12G	06NR	0	'FROM->TO'	G11_045	'JONES STATION - TUCO INTERCHANGE 230KV CKT 1'	351	0.32614	122.2039	'CROSBY COUNTY INTERCHANGE - LUBBOCK EAST INTERCHANGE 115KV CKT 1'
12G	06NR	0	'FROM->TO'	G11_045	'JONES STATION - TUCO INTERCHANGE 230KV CKT 1'	351	0.32614	127.1018	'FLOYD COUNTY INTERCHANGE - G11_025T 115.00 115KV CKT 1'
12G	06NR	0	'FROM->TO'	G11_045	'JONES STATION - TUCO INTERCHANGE 230KV CKT 1'	351	0.32588	123.9029	'CARLISLE INTERCHANGE (WH XHS70711) 230/115/13.2KV TRANSFORMER CKT 1'
12G	06NR	0	'FROM->TO'	G11_045	'JONES STATION - TUCO INTERCHANGE 230KV CKT 1'	351	0.325	102.65	'CARLISLE INTERCHANGE - SOUTH PLAINS REC-ERSKINE 115KV CKT 1'
12G	06NR	0	'FROM->TO'	G11_045	'JONES STATION - TUCO INTERCHANGE 230KV CKT 1'	351	0.325	102.42	'SPP-SWPS-V62'
12G	06NR	0	'FROM->TO'	G11_045	'JONES STATION - TUCO INTERCHANGE 230KV CKT 1'	351	0.325	102.07	'INDIANA SUB - SOUTH PLAINS REC-ERSKINE 115KV CKT 1'
12G	06NR	0	'FROM->TO'	G11_045	'JONES STATION - TUCO INTERCHANGE 230KV CKT 1'	351	0.325	100.66	'INDIANA SUB - STANTON SUB 115KV CKT 1'
12G	06NR	0	'FROM->TO'	G11_045	'JONES STATION - TUCO INTERCHANGE 230KV CKT 1'	351	0.32508	122.9279	'Jones Station Bus#2 - LUBBOCK SOUTH INTERCHANGE 230KV CKT 2'
12G	06NR	0	'FROM->TO'	G11_045	'JONES STATION - TUCO INTERCHANGE 230KV CKT 1'	351	0.325	101.25	'SUNDOWN INTERCHANGE (WH XDS70381) 230/115/13.8KV TRANSFORMER CKT 1'
12G	06NR	0	'FROM->TO'	G11_045	'JONES STATION - TUCO INTERCHANGE 230KV CKT 1'	351	0.32481	124.2963	'GRASSLAND INTERCHANGE - WOLFFORTH INTERCHANGE 230KV CKT 1'
13SP	00NR	0	'FROM->TO'	G11_045	'Jones Station Bus#2 - LUBBOCK SOUTH INTERCHANGE 230KV CKT 2'	351	0.32466	103.4415	'JONES STATION - LUBBOCK SOUTH INTERCHANGE 230KV CKT 1'
12G	06NR	0	'FROM->TO'	G11_045	'JONES STATION - TUCO INTERCHANGE 230KV CKT 1'	351	0.32415	122.2198	'CAPROCK REC-GRADY - CAPROCK REC-REED 138KV CKT 1'
12G	06NR	0	'FROM->TO'	G11_045	'JONES STATION - TUCO INTERCHANGE 230KV CKT 1'	351	0.32415	122.3371	'CAPROCK REC-KOCH - CAPROCK REC-REED 138KV CKT 1'
12G	06NR	0	'FROM->TO'	G11_045	'JONES STATION - TUCO INTERCHANGE 230KV CKT 1'	351	0.32415	122.3743	'CAPROCK REC-KOCH - CAPROCK REC-VEALMOOR 138KV CKT 1'
12G	06NR	0	'FROM->TO'	G11_045	'JONES STATION - TUCO INTERCHANGE 230KV CKT 1'	351	0.324	100.65	'HALE CO INTERCHANGE - KRESS INTERCHANGE 115KV CKT 1'
12G	06NR	0	'FROM->TO'	G11_045	'JONES STATION - TUCO INTERCHANGE 230KV CKT 1'	351	0.324	100.62	'DEAF SMITH COUNTY INTERCHANGE - S-RANDLCO 230.00 230KV CKT 1'
12SP	00NR	0	'FROM->TO'	G11_045	'Jones Station Bus#2 - LUBBOCK SOUTH INTERCHANGE 230KV CKT 2'	351	0.32389	103.1994	'JONES STATION - LUBBOCK SOUTH INTERCHANGE 230KV CKT 1'
12G	06NR	0	'FROM->TO'	G11_045	'JONES STATION - TUCO INTERCHANGE 230KV CKT 1'	351	0.324	103.20	'DEAF SMITH COUNTY INTERCHANGE - PLANT X STATION 230KV CKT 1'
12G	06NR	0	'FROM->TO'	G11_045	'JONES STATION - TUCO INTERCHANGE 230KV CKT 1'	351	0.323	102.50	'POTTER COUNTY INTERCHANGE - S-RANDLCO 230.00 230KV CKT 1'
12G	06NR	0	'FROM->TO'	G11_045	'JONES STATION - TUCO INTERCHANGE 230KV CKT 1'	351	0.323	102.06	'PLANT X STATION - S-RANDLCO 230.00 230KV CKT 1'
12G	06NR	0	'FROM->TO'	G11_045	'JONES STATION - TUCO INTERCHANGE 230KV CKT 1'	351	0.323	101.63	'Jones Station Bus#2 - LUBBOCK POWER & LIGHT-HOLLY PLANT 230KV CKT 1'
12G	06NR	0	'FROM->TO'	G11_045	'JONES STATION - TUCO INTERCHANGE 230KV CKT 1'	351	0.323	101.87	'BUSHLAND INTERCHANGE - S-RANDLCO 230.00 230KV CKT 1'
12G	06NR	0	'FROM->TO'	G11_045	'JONES STATION - TUCO INTERCHANGE 230KV CKT 1'	351	0.323	100.86	'LUBBOCK EAST INTERCHANGE - LUBBOCK POWER & LIGHT-WADSWORTH 230KV CKT 1'
12G	06NR	0	'FROM->TO'	G11_045	'JONES STATION - TUCO INTERCHANGE 230KV CKT 1'	351	0.323	101.05	'BUSHLAND INTERCHANGE - POTTER COUNTY INTERCHANGE 230KV CKT 1'
17SP	00NR	0	'FROM->TO'	G11_045	'Jones Station Bus#2 - LUBBOCK SOUTH INTERCHANGE 230KV CKT 2'	351	0.32273	110.1363	'JONES STATION - LUBBOCK SOUTH INTERCHANGE 230KV CKT 1'
12G	06NR	0	'FROM->TO'	G11_045	'JONES STATION - TUCO INTERCHANGE 230KV CKT 1'	351	0.323	101.19	'LUBBOCK POWER & LIGHT-SOUTHEAST - LUBBOCK SOUTH INTERCHANGE 230KV CKT 1'
12G	06NR	0	'FROM->TO'	G11_045	'JONES STATION - TUCO INTERCHANGE 230KV CKT 1'	351	0.322	101.77	'SPP-SWPS-V33'
12G	06NR	0	'FROM->TO'	G11_045	'JONES STATION - TUCO INTERCHANGE 230KV CKT 1'	351	0.322	101.31	'GRASSLAND INTERCHANGE - LYNN COUNTY INTERCHANGE 115KV CKT 1'
12G	06NR	0	'FROM->TO'	G11_045	'JONES STATION - TUCO INTERCHANGE 230KV CKT 1'	351	0.322	100.78	'LYNN COUNTY INTERCHANGE - SOUTH PLAINS REC-WOODROW INTERCHANGE 115KV CKT 1'
12G	06NR	0	'FROM->TO'	G11_045	'JONES STATION - TUCO INTERCHANGE 230KV CKT 1'	351	0.322	100.62	'SPP-SWPS-T89'
12G	06NR	0	'FROM->TO'	G11_045	'JONES STATION - TUCO INTERCHANGE 230KV CKT 1'	351	0.32227	124.2487	'CARLISLE INTERCHANGE - SOUTH PLAINS REC-ERSKINE 115KV CKT 1'
12G	06NR	0	'FROM->TO'	G11_045	'JONES STATION - TUCO INTERCHANGE 230KV CKT 1'	351	0.32227	123.7014	'INDIANA SUB - SOUTH PLAINS REC-ERSKINE 115KV CKT 1'
12G	06NR	0	'FROM->TO'	G11_045	'JONES STATION - TUCO INTERCHANGE 230KV CKT 1'	351	0.32227	122.2929	'INDIANA SUB - STANTON SUB 115KV CKT 1'
12G	06NR	0	'FROM->TO'	G11_045	'JONES STATION - TUCO INTERCHANGE 230KV CKT 1'	351	0.32227	121.9828	'SPP-SWPS-V15'
12G	06NR	0	'FROM->TO'	G11_045	'JONES STATION - TUCO INTERCHANGE 230KV CKT 1'	351	0.32227	124.0324	'SPP-SWPS-V62'
12G	06NR	0	'FROM->TO'	G11_045	'JONES STATION - TUCO INTERCHANGE 230KV CKT 1'	351	0.322	101.33	'SPP-SWPS-V49'
12G	06NR	0	'FROM->TO'	G11_045	'JONES STATION - TUCO INTERCHANGE 230KV CKT 1'	351	0.322	100.67	'SPP-SWPS-T14'
12G	06NR	0	'FROM->TO'	G11_045	'JONES STATION - TUCO INTERCHANGE 230KV CKT 1'	351	0.322	109.73	'BASE CASE'
12G	06NR	0	'FROM->TO'	G11_045	'JONES STATION - TUCO INTERCHANGE 230KV CKT 1'	351	0.322	102.54	'GEN336821 1-GRAND GULF UNIT'
12G	06NR	0	'FROM->TO'	G11_045	'JONES STATION - TUCO INTERCHANGE 230KV CKT 1'	351	0.322	102.30	'GEN336153 1-WATERFORD UNIT#3'
12G	06NR	0	'FROM->TO'	G11_045	'JONES STATION - TUCO INTERCHANGE 230KV CKT 1'	351	0.322	101.98	'GEN337911 1-ARKANSAS NUCLEAR ONE UNIT #2'
12G	06NR	0	'FROM->TO'	G11_045	'JONES STATION - TUCO INTERCHANGE 230KV CKT 1'	351	0.322	101.97	'GEN335831 1-RIVERBEND UNIT#1'
12G	06NR	0	'FROM->TO'	G11_045	'JONES STATION - TUCO INTERCHANGE 230KV CKT 1'	351	0.322	101.57	'GEN337910 1-ARKANSAS NUCLEAR ONE UNIT #1'
12G	06NR	0	'FROM->TO'	G11_045	'JONES STATION - TUCO INTERCHANGE 230KV CKT 1'	351	0.322	101.44	'GEN338146 1-INDEPENDENCE UNIT #2'
12G	06NR	0	'FROM->TO'	G11_045	'JONES STATION - TUCO INTERCHANGE 230KV CKT 1'	351	0.322	101.43	'GEN338143 1-INDEPENDENCE UNIT #1'
12G	06NR	0	'FROM->TO'	G11_045	'JONES STATION - TUCO INTERCHANGE 230KV CKT 1'	351	0.322	101.41	'GEN337652 1-WHITE BLUFF UNIT #1'
12G	06NR	0	'FROM->TO'	G11_045	'JONES STATION - TUCO INTERCHANGE 230KV CKT 1'	351	0.322	101.29	'GEN337653 1-WHITE BLUFF UNIT #2'
12G	06NR	0	'FROM->TO'	G11_045	'JONES STATION - TUCO INTERCHANGE 230KV CKT 1'	351	0.322	101.13	'GEN501801 1-DOLET HILLS UNIT1'

SEASON	GROUP	SCENARIO	DIRECTION	SOURCE	MONITORED ELEMENT	RATE B (MVA)	TDF	(%MVA) LOADING	CONTINGENCY
12G	06NR	0	'FROM->TO'	G11_045	'JONES STATION - TUCO INTERCHANGE 230KV CKT 1'	351	0.322	101.12	'GEN337041 1-GERALD ANDRUS'
12G	06NR	0	'FROM->TO'	G11_045	'JONES STATION - TUCO INTERCHANGE 230KV CKT 1'	351	0.322	101.12	'GEN336251 1-NINEMILE POINT UNIT#4'
12G	06NR	0	'FROM->TO'	G11_045	'JONES STATION - TUCO INTERCHANGE 230KV CKT 1'	351	0.322	101.03	'GEN338388 1-1PLUMPT 23.000'
12G	06NR	0	'FROM->TO'	G11_045	'JONES STATION - TUCO INTERCHANGE 230KV CKT 1'	351	0.322	100.99	'GEN501813 1-RODEMACHER UNIT 3'
12G	06NR	0	'FROM->TO'	G11_045	'JONES STATION - TUCO INTERCHANGE 230KV CKT 1'	351	0.322	100.94	'GEN336831 1-BAXTER WILSON SES'
12G	06NR	0	'FROM->TO'	G11_045	'JONES STATION - TUCO INTERCHANGE 230KV CKT 1'	351	0.322	100.91	'GEN509403 1-PIRKEY GENERATION'
12G	06NR	0	'FROM->TO'	G11_045	'JONES STATION - TUCO INTERCHANGE 230KV CKT 1'	351	0.322	100.86	'SPP-SWPS-V55'
12G	06NR	0	'FROM->TO'	G11_045	'JONES STATION - TUCO INTERCHANGE 230KV CKT 1'	351	0.322	100.84	'GEN501812 1-RODEMACHER UNIT 2'
12G	06NR	0	'FROM->TO'	G11_045	'JONES STATION - TUCO INTERCHANGE 230KV CKT 1'	351	0.322	100.83	'GEN335206 1-NELSON UNIT 6'
12G	06NR	0	'FROM->TO'	G11_045	'JONES STATION - TUCO INTERCHANGE 230KV CKT 1'	351	0.322	100.77	'GEN335204 1-NELSON UNIT 4'
12G	06NR	0	'FROM->TO'	G11_045	'JONES STATION - TUCO INTERCHANGE 230KV CKT 1'	351	0.322	100.75	'GEN334440 1-SABINE UNIT 4'
12G	06NR	0	'FROM->TO'	G11_045	'JONES STATION - TUCO INTERCHANGE 230KV CKT 1'	351	0.322	100.67	'GEN336801 1-BAXTER WILSON UNIT #1'
12G	06NR	0	'FROM->TO'	G11_045	'JONES STATION - TUCO INTERCHANGE 230KV CKT 1'	351	0.322	100.66	'GEN509405 1-WELSH #2'
12G	06NR	0	'FROM->TO'	G11_045	'JONES STATION - TUCO INTERCHANGE 230KV CKT 1'	351	0.322	100.66	'GEN509406 1-WELSH #3'
12G	06NR	0	'FROM->TO'	G11_045	'JONES STATION - TUCO INTERCHANGE 230KV CKT 1'	351	0.322	100.66	'GEN509404 1-WELSH #1'
12G	06NR	0	'FROM->TO'	G11_045	'JONES STATION - TUCO INTERCHANGE 230KV CKT 1'	351	0.322	100.61	'GEN334441 1-SABINE UNIT 5'
12G	06NR	0	'FROM->TO'	G11_045	'JONES STATION - TUCO INTERCHANGE 230KV CKT 1'	351	0.322	100.59	'GEN509394 1-FLINT CREEK'
12G	06NR	0	'FROM->TO'	G11_045	'JONES STATION - TUCO INTERCHANGE 230KV CKT 1'	351	0.322	101.01	'DBL-MATT-TAT'
12G	06NR	0	'FROM->TO'	G11_045	'JONES STATION - TUCO INTERCHANGE 230KV CKT 1'	351	0.322	100.65	'G11_051T 345.00 - TATONGA7 345.00 345KV CKT 1'
12G	06NR	0	'FROM->TO'	G11_045	'JONES STATION - TUCO INTERCHANGE 230KV CKT 1'	351	0.322	100.63	'G11_051T 345.00 - WOODWARD DISTRICT EHV 345KV CKT 1'
12G	06NR	0	'FROM->TO'	G11_045	'JONES STATION - TUCO INTERCHANGE 230KV CKT 1'	351	0.322	122.7229	'SUNDOWN INTERCHANGE (WH XDS70381) 230/115/13.8KV TRANSFORMER CKT 1'
12G	06NR	0	'FROM->TO'	G11_045	'JONES STATION - TUCO INTERCHANGE 230KV CKT 1'	351	0.322	100.79	'Hitchland Interchange - WOODWARD DISTRICT EHV 345KV CKT 2'
12G	06NR	0	'FROM->TO'	G11_045	'JONES STATION - TUCO INTERCHANGE 230KV CKT 1'	351	0.322	100.82	'MOORE COUNTY INTERCHANGE - POTTER COUNTY INTERCHANGE 230KV CKT 1'
12G	06NR	0	'FROM->TO'	G11_045	'JONES STATION - TUCO INTERCHANGE 230KV CKT 1'	351	0.32162	119.8914	'HOCKLEY COUNTY INTERCHANGE - LAMB COUNTY INTERCHANGE 115KV CKT 1'
12G	06NR	0	'FROM->TO'	G11_045	'JONES STATION - TUCO INTERCHANGE 230KV CKT 1'	351	0.32162	122.0167	'Lamb County REC-Opdyke Sub - SUNDOWN INTERCHANGE 115KV CKT 1'
12G	06NR	0	'FROM->TO'	G11_045	'JONES STATION - TUCO INTERCHANGE 230KV CKT 1'	351	0.32162	122.0264	'SPP-SWPS-T31'
12G	06NR	0	'FROM->TO'	G11_045	'JONES STATION - TUCO INTERCHANGE 230KV CKT 1'	351	0.322	101.59	'GRAPEVINE INTERCHANGE - NICHOLS STATION 230KV CKT 1'
12G	06NR	0	'FROM->TO'	G11_045	'JONES STATION - TUCO INTERCHANGE 230KV CKT 1'	351	0.321	101.75	'OASIS INTERCHANGE - SAN JUAN MESA TAP 230KV CKT 1'
12G	06NR	0	'FROM->TO'	G11_045	'JONES STATION - TUCO INTERCHANGE 230KV CKT 1'	351	0.321	102.80	'DBL-WWRD-BVR'
12G	06NR	0	'FROM->TO'	G11_045	'JONES STATION - TUCO INTERCHANGE 230KV CKT 1'	351	0.321	100.68	'G11_012T 230.00 - HITCHLAND INTERCHANGE 230KV CKT 1'
12G	06NR	0	'FROM->TO'	G11_045	'JONES STATION - TUCO INTERCHANGE 230KV CKT 1'	351	0.321	102.53	'ELK CITY 230KV - SWEETWATER 230KV CKT 1'
12G	06NR	0	'FROM->TO'	G11_045	'JONES STATION - TUCO INTERCHANGE 230KV CKT 1'	351	0.321	102.53	'ELK CITY 230KV (ELKCTY-6) 230/138/13.8KV TRANSFORMER CKT 1'
12G	06NR	0	'FROM->TO'	G11_045	'JONES STATION - TUCO INTERCHANGE 230KV CKT 1'	351	0.321	101.83	'GRAPEVINE INTERCHANGE - STATELINE INTERCHANGE 230KV CKT 1'
12G	06NR	0	'FROM->TO'	G11_045	'JONES STATION - TUCO INTERCHANGE 230KV CKT 1'	351	0.321	101.48	'SPP-SWPS-02A'
12G	06NR	0	'FROM->TO'	G11_045	'JONES STATION - TUCO INTERCHANGE 230KV CKT 1'	351	0.321	101.48	'SPP-SWPS-02'
12G	06NR	0	'FROM->TO'	G11_045	'JONES STATION - TUCO INTERCHANGE 230KV CKT 1'	351	0.321	101.48	'STATELINE INTERCHANGE - STLN-DEMARC6 230KV CKT 1'
12G	06NR	0	'FROM->TO'	G11_045	'JONES STATION - TUCO INTERCHANGE 230KV CKT 1'	351	0.321	101.47	'STLN-DEMARC6 - SWEETWATER 230KV CKT 1'
12G	06NR	0	'FROM->TO'	G11_045	'JONES STATION - TUCO INTERCHANGE 230KV CKT 1'	351	0.32121	122.029	'HALE CO INTERCHANGE - KRESS INTERCHANGE 115KV CKT 1'
12G	06NR	0	'FROM->TO'	G11_045	'JONES STATION - TUCO INTERCHANGE 230KV CKT 1'	351	0.321	102.13	'SPP-SWPS-03'
12G	06NR	0	'FROM->TO'	G11_045	'JONES STATION - TUCO INTERCHANGE 230KV CKT 1'	351	0.321	102.92	'DBL-HTCH-BVR'
12G	06NR	0	'FROM->TO'	G11_045	'JONES STATION - TUCO INTERCHANGE 230KV CKT 1'	351	0.321	101.40	'PLANT X STATION (WH ALM20171) 230/115/13.2KV TRANSFORMER CKT 1'
12G	06NR	0	'FROM->TO'	G11_045	'JONES STATION - TUCO INTERCHANGE 230KV CKT 1'	351	0.321	100.93	'HOBBS INTERCHANGE - LEA COUNTY INTERCHANGE 230KV CKT 1'
12G	06NR	0	'FROM->TO'	G11_045	'JONES STATION - TUCO INTERCHANGE 230KV CKT 1'	351	0.32113	124.2535	'DEAF SMITH COUNTY INTERCHANGE - PLANT X STATION 230KV CKT 1'
12G	06NR	0	'FROM->TO'	G11_045	'JONES STATION - TUCO INTERCHANGE 230KV CKT 1'	351	0.32077	123.1862	'PLANT X STATION - S-RANDLCO 230.00 230KV CKT 1'
12G	06NR	0	'FROM->TO'	G11_045	'JONES STATION - TUCO INTERCHANGE 230KV CKT 1'	351	0.32074	123.6709	'POTTER COUNTY INTERCHANGE - S-RANDLCO 230.00 230KV CKT 1'
12G	06NR	0	'FROM->TO'	G11_045	'JONES STATION - TUCO INTERCHANGE 230KV CKT 1'	351	0.320	101.84	'CHAVESCO 345.00 - TOLK STATION 345KV CKT 1'
12G	06NR	0	'FROM->TO'	G11_045	'JONES STATION - TUCO INTERCHANGE 230KV CKT 1'	351	0.320	101.83	'TOLK STATION (ABBXNL844501) 345/230/13.2KV TRANSFORMER CKT 1'
12G	06NR	0	'FROM->TO'	G11_045	'JONES STATION - TUCO INTERCHANGE 230KV CKT 1'	351	0.32046	120.1611	'CAPROCK REC-1956 - CAPROCK REC-MCDONALD 138KV CKT 1'
12G	06NR	0	'FROM->TO'	G11_045	'JONES STATION - TUCO INTERCHANGE 230KV CKT 1'	351	0.32037	123.0755	'BUSHLAND INTERCHANGE - S-RANDLCO 230.00 230KV CKT 1'
12G	06NR	0	'FROM->TO'	G11_045	'JONES STATION - TUCO INTERCHANGE 230KV CKT 1'	351	0.32037	123.043	'Jones Station Bus#2 - LUBBOCK POWER & LIGHT-HOLLY PLANT 230KV CKT 1'
12G	06NR	0	'FROM->TO'	G11_045	'JONES STATION - TUCO INTERCHANGE 230KV CKT 1'	351	0.31992	119.9359	'LAMB COUNTY INTERCHANGE - TOLK STATION WEST 230KV CKT 1'
12G	06NR	0	'FROM->TO'	G11_045	'JONES STATION - TUCO INTERCHANGE 230KV CKT 1'	351	0.31992	119.9093	'LAMB COUNTY INTERCHANGE (WH ALM20172) 230/115/13.2KV TRANSFORMER CKT 1'
12G	06NR	0	'FROM->TO'	G11_045	'JONES STATION - TUCO INTERCHANGE 230KV CKT 1'	351	0.31989	122.3167	'BUSHLAND INTERCHANGE - POTTER COUNTY INTERCHANGE 230KV CKT 1'
12G	06NR	0	'FROM->TO'	G11_045	'JONES STATION - TUCO INTERCHANGE 230KV CKT 1'	351	0.31977	122.2316	'LUBBOCK EAST INTERCHANGE - LUBBOCK POWER & LIGHT-WADSWORTH 230KV CKT 1'
12G	06NR	0	'FROM->TO'	G11_045	'JONES STATION - TUCO INTERCHANGE 230KV CKT 1'	351	0.31972	122.5309	'LUBBOCK POWER & LIGHT-SOUTHEAST - LUBBOCK SOUTH INTERCHANGE 230KV CKT 1'
12G	06NR	0	'FROM->TO'	G11_045	'JONES STATION - TUCO INTERCHANGE 230KV CKT 1'	351	0.319	105.68	'G05-17T 345.00 - Hitchland Interchange 345KV CKT 1'
12G	06NR	0	'FROM->TO'	G11_045	'JONES STATION - TUCO INTERCHANGE 230KV CKT 1'	351	0.319	104.43	'G05-17T 345.00 - POTTER COUNTY INTERCHANGE 345KV CKT 1'
12G	06NR	0	'FROM->TO'	G11_045	'JONES STATION - TUCO INTERCHANGE 230KV CKT 1'	351	0.319	103.21	'POTTER COUNTY INTERCHANGE (WAUK 90343-A) 345/230/13.2KV TRANSFORMER CKT 1'
12G	06NR	0	'FROM->TO'	G11_045	'JONES STATION - TUCO INTERCHANGE 230KV CKT 1'	351	0.31935	122.4987	'GRASSLAND INTERCHANGE - LYNN COUNTY INTERCHANGE 115KV CKT 1'
12G	06NR	0	'FROM->TO'	G11_045	'JONES STATION - TUCO INTERCHANGE 230KV CKT 1'	351	0.31935	122.1098	'GRASSLAND INTERCHANGE (PENN 0105951) 230/115/13.2KV TRANSFORMER CKT 1'
12G	06NR	0	'FROM->TO'	G11_045	'JONES STATION - TUCO INTERCHANGE 230KV CKT 1'	351	0.31935	121.9713	'LYNN COUNTY INTERCHANGE - SOUTH PLAINS REC-WOODROW INTERCHANGE 115KV CKT 1'
12G	06NR	0	'FROM->TO'	G11_045	'JONES STATION - TUCO INTERCHANGE 230KV CKT 1'	351	0.31935	122.9249	'SPP-SWPS-V33'
12G	06NR	0	'FROM->TO'	G11_045	'JONES STATION - TUCO INTERCHANGE 230KV CKT 1'	351	0.31933	121.9726	'SPP-SWPS-T89'
12G	06NR	0	'FROM->TO'	G11_045	'JONES STATION - TUCO INTERCHANGE 230KV CKT 1'	351	0.31915	122.6654	'SPP-SWPS-V49'
12G	06NR	0	'FROM->TO'	G11_045	'JONES STATION - TUCO INTERCHANGE 230KV CKT 1'	351	0.31911	122.0006	'SPP-SWPS-T14'
12G	06NR	0	'FROM->TO'	G11_045	'JONES STATION - TUCO INTERCHANGE 230KV CKT 1'	351	0.31909	133.2278	'BASE CASE'
12G	06NR	0	'FROM->TO'	G11_045	'JONES STATION - TUCO INTERCHANGE 230KV CKT 1'	351	0.31909	122.2214	'GEN334440 1-SABINE UNIT 4'
12G	06NR	0	'FROM->TO'	G11_045	'JONES STATION - TUCO INTERCHANGE 230KV CKT 1'	351	0.31909	122.0669	'GEN334441 1-SABINE UNIT 5'
12G	06NR	0	'FROM->TO'	G11_045	'JONES STATION - TUCO INTERCHANGE 230KV CKT 1'	351	0.31909	122.2481	'GEN335204 1-NELSON UNIT 4'
12G	06NR	0	'FROM->TO'	G11_045	'JONES STATION - TUCO INTERCHANGE 230KV CKT 1'	351	0.31909	122.3133	'GEN335206 1-NELSON UNIT 6'
12G	06NR	0	'FROM->TO'	G11_045	'JONES STATION - TUCO INTERCHANGE 230KV CKT 1'	351	0.31909	123.5382	'GEN335831 1-RIVERBEND UNIT#1'
12G	06NR	0	'FROM->TO'	G11_045	'JONES STATION - TUCO INTERCHANGE 230KV CKT 1'	351	0.31909	123.8992	'GEN336153 1-WATERFORD UNIT#3'
12G	06NR	0	'FROM->TO'	G11_045	'JONES STATION - TUCO INTERCHANGE 230KV CKT 1'	351	0.31909	122.6279	'GEN336251 1-NINEMILE POINT UNIT#4'
12G	06NR	0	'FROM->TO'	G11_045	'JONES STATION - TUCO INTERCHANGE 230KV CKT 1'	351	0.31909	122.1372	'GEN336801 1-BAXTER WILSON UNIT #1'
12G	06NR	0	'FROM->TO'	G11_045	'JONES STATION - TUCO INTERCHANGE 230KV CKT 1'	351	0.31909	124.1731	'GEN336821 1-GRAND GULF UNIT'
12G	06NR	0	'FROM->TO'	G11_045	'JONES STATION - TUCO INTERCHANGE 230KV CKT 1'	351	0.31909	120.9344	'TUCO INTERCHANGE 230/13.0KV TRANSFORMER CKT 1'
12G	06NR	0	'FROM->TO'	G11_045	'JONES STATION - TUCO INTERCHANGE 230KV CKT 1'	351	0.31908	122.1743	'SPP-SWPS-V55'
12G	06NR	0	'FROM->TO'	G11_045	'JONES STATION - TUCO INTERCHANGE 230KV CKT 1'	351	0.31901	122.0019	'G11_051T 345.00 - TATONGA7 345.00 345KV CKT 1'

SEASON	GROUP	SCENARIO	DIRECTION	SOURCE	MONITORED ELEMENT	RATE B (MVA)	TDF	(%MVA) LOADING	CONTINGENCY
12G	06NR	0	'FROM->TO'	G11_045	'JONES STATION - TUCO INTERCHANGE 230KV CKT 1'	351	0.31901	121.9694	'G11_051T 345.00 - WOODWARD DISTRICT EHV 345KV CKT 1'
12G	06NR	0	'FROM->TO'	G11_045	'JONES STATION - TUCO INTERCHANGE 230KV CKT 1'	351	0.31896	120.2141	'LAWTON EASTSIDE - SUNNYSIDE 345KV CKT 1'
12G	06NR	0	'FROM->TO'	G11_045	'JONES STATION - TUCO INTERCHANGE 230KV CKT 1'	351	0.31879	122.1544	'Hitchland Interchange - WOODWARD DISTRICT EHV 345KV CKT 2'
12G	06NR	0	'FROM->TO'	G11_045	'JONES STATION - TUCO INTERCHANGE 230KV CKT 1'	351	0.31865	122.1653	'MOORE COUNTY INTERCHANGE - POTTER COUNTY INTERCHANGE 230KV CKT 1'
12G	06NR	0	'FROM->TO'	G11_045	'JONES STATION - TUCO INTERCHANGE 230KV CKT 1'	351	0.31853	122.927	'GRAPEVINE INTERCHANGE - NICHOLS STATION 230KV CKT 1'
12G	06NR	0	'FROM->TO'	G11_045	'JONES STATION - TUCO INTERCHANGE 230KV CKT 1'	351	0.3185	119.2567	'BORDER 7345.00 - WOODWARD DISTRICT EHV 345KV CKT 1'
12G	06NR	0	'FROM->TO'	G11_045	'JONES STATION - TUCO INTERCHANGE 230KV CKT 1'	351	0.31829	119.611	'CHAVES COUNTY INTERCHANGE - SAN JUAN MESA TAP 230KV CKT 1'
12G	06NR	0	'FROM->TO'	G11_045	'JONES STATION - TUCO INTERCHANGE 230KV CKT 1'	351	0.31829	123.2333	'OASIS INTERCHANGE - SAN JUAN MESA TAP 230KV CKT 1'
12G	06NR	0	'FROM->TO'	G11_045	'JONES STATION - TUCO INTERCHANGE 230KV CKT 1'	351	0.31826	122.0229	'G11_012T 230.00 - HITCHLAND INTERCHANGE 230KV CKT 1'
12G	06NR	0	'FROM->TO'	G11_045	'JONES STATION - TUCO INTERCHANGE 230KV CKT 1'	351	0.31823	122.5966	'PLANT X STATION (WH ALM20171) 230/115/13.2KV TRANSFORMER CKT 1'
12G	06NR	0	'FROM->TO'	G11_045	'JONES STATION - TUCO INTERCHANGE 230KV CKT 1'	351	0.3182	119.9124	'TUCO INTERCHANGE (UPDATE DATA) 345/230/13.2KV TRANSFORMER CKT 2'
12G	06NR	0	'FROM->TO'	G11_045	'JONES STATION - TUCO INTERCHANGE 230KV CKT 1'	351	0.31817	123.8698	'ELK CITY 230KV - SWEETWATER 230KV CKT 1'
12G	06NR	0	'FROM->TO'	G11_045	'JONES STATION - TUCO INTERCHANGE 230KV CKT 1'	351	0.31817	123.8696	'ELK CITY 230KV (ELKCTY-6) 230/138/13.8KV TRANSFORMER CKT 1'
12G	06NR	0	'FROM->TO'	G11_045	'JONES STATION - TUCO INTERCHANGE 230KV CKT 1'	351	0.31817	123.1555	'GRAPEVINE INTERCHANGE - STATELINE INTERCHANGE 230KV CKT 1'
12G	06NR	0	'FROM->TO'	G11_045	'JONES STATION - TUCO INTERCHANGE 230KV CKT 1'	351	0.31817	122.8067	'SPP-SWPS-02'
12G	06NR	0	'FROM->TO'	G11_045	'JONES STATION - TUCO INTERCHANGE 230KV CKT 1'	351	0.31817	122.8219	'SPP-SWPS-02A'
12G	06NR	0	'FROM->TO'	G11_045	'JONES STATION - TUCO INTERCHANGE 230KV CKT 1'	351	0.31817	122.8067	'STATELINE INTERCHANGE - STLN-DEMARC6 230KV CKT 1'
12G	06NR	0	'FROM->TO'	G11_045	'JONES STATION - TUCO INTERCHANGE 230KV CKT 1'	351	0.31817	122.8084	'STLN-DEMARC6 - SWEETWATER 230KV CKT 1'
12G	06NR	0	'FROM->TO'	G11_045	'JONES STATION - TUCO INTERCHANGE 230KV CKT 1'	351	0.318	106.68	'WOLFFORTH INTERCHANGE - YUMA INTERCHANGE 115KV CKT 1'
12G	06NR	0	'FROM->TO'	G11_045	'JONES STATION - TUCO INTERCHANGE 230KV CKT 1'	351	0.318	105.30	'LP-DOUD_TP 3115.00 - YUMA INTERCHANGE 115KV CKT 1'
12G	06NR	0	'FROM->TO'	G11_045	'JONES STATION - TUCO INTERCHANGE 230KV CKT 1'	351	0.318	104.10	'CARLISLE INTERCHANGE - LP-DOUD_TP 3115.00 115KV CKT 1'
12G	06NR	0	'FROM->TO'	G11_045	'JONES STATION - TUCO INTERCHANGE 230KV CKT 1'	351	0.31813	123.457	'SPP-SWPS-03'
12G	06NR	0	'FROM->TO'	G11_045	'JONES STATION - TUCO INTERCHANGE 230KV CKT 1'	351	0.31795	122.3839	'HOBBS INTERCHANGE - LEA COUNTY INTERCHANGE 230KV CKT 1'
12G	06NR	0	'FROM->TO'	G11_045	'JONES STATION - TUCO INTERCHANGE 230KV CKT 1'	351	0.3177	119.5555	'TUCO INTERCHANGE (GE M1022338) 345/230/13.2KV TRANSFORMER CKT 1'
12G	06NR	0	'FROM->TO'	G11_045	'JONES STATION - TUCO INTERCHANGE 230KV CKT 1'	351	0.31699	117.3996	'CHAVESCO 345.00 - EDDY COUNTY INTERCHANGE 345KV CKT 1'
12G	06NR	0	'FROM->TO'	G11_045	'JONES STATION - TUCO INTERCHANGE 230KV CKT 1'	351	0.31699	123.5443	'CHAVESCO 345.00 - TOLK STATION 345KV CKT 1'
12G	06NR	0	'FROM->TO'	G11_045	'JONES STATION - TUCO INTERCHANGE 230KV CKT 1'	351	0.31699	117.402	'EDDY COUNTY INTERCHANGE (ABB AEM30711) 345/230/13.2KV TRANSFORMER CKT 1'
12G	06NR	0	'FROM->TO'	G11_045	'JONES STATION - TUCO INTERCHANGE 230KV CKT 1'	351	0.31699	123.5271	'TOLK STATION (ABBXNL844501) 345/230/13.2KV TRANSFORMER CKT 1'
12G	06NR	0	'FROM->TO'	G11_045	'JONES STATION - TUCO INTERCHANGE 230KV CKT 1'	351	0.31643	126.7874	'G05-17T 345.00 - Hitchland Interchange 345KV CKT 1'
12G	06NR	0	'FROM->TO'	G11_045	'JONES STATION - TUCO INTERCHANGE 230KV CKT 1'	351	0.31643	125.5692	'G05-17T 345.00 - POTTER COUNTY INTERCHANGE 345KV CKT 1'
12G	06NR	0	'FROM->TO'	G11_045	'JONES STATION - TUCO INTERCHANGE 230KV CKT 1'	351	0.31643	124.4745	'POTTER COUNTY INTERCHANGE (WAUK 90343-A) 345/230/13.2KV TRANSFORMER CKT 1'
12G	06NR	0	'FROM->TO'	G11_045	'JONES STATION - TUCO INTERCHANGE 230KV CKT 1'	351	0.31579	122.8072	'TOLK STATION EAST - TOLK STATION TAP 230KV CKT 1'
12G	06NR	0	'FROM->TO'	G11_045	'JONES STATION - TUCO INTERCHANGE 230KV CKT 1'	351	0.3151	125.2739	'CARLISLE INTERCHANGE - LP-DOUD_TP 3115.00 115KV CKT 1'
12G	06NR	0	'FROM->TO'	G11_045	'JONES STATION - TUCO INTERCHANGE 230KV CKT 1'	351	0.3151	126.4968	'LP-DOUD_TP 3115.00 - YUMA INTERCHANGE 115KV CKT 1'
12G	06NR	0	'FROM->TO'	G11_045	'JONES STATION - TUCO INTERCHANGE 230KV CKT 1'	351	0.3151	127.8806	'WOLFFORTH INTERCHANGE - YUMA INTERCHANGE 115KV CKT 1'
12G	06NR	0	'FROM->TO'	G11_045	'JONES STATION - TUCO INTERCHANGE 230KV CKT 1'	351	0.31447	110.9847	'G05-15T 345.00 - OKLAUNION 345KV CKT 1'
12G	06NR	0	'FROM->TO'	G11_045	'JONES STATION - TUCO INTERCHANGE 230KV CKT 1'	351	0.31447	113.0845	'G05-15T 345.00 - TUCO INTERCHANGE 345KV CKT 1'
12G	06NR	0	'FROM->TO'	G11_045	'JONES STATION - TUCO INTERCHANGE 230KV CKT 1'	351	0.31191	114.6073	'BORDER 7345.00 - TUCO INTERCHANGE 345KV CKT 1'
12G	06NR	0	'FROM->TO'	G11_045	'JONES STATION - TUCO INTERCHANGE 230KV CKT 1'	351	0.31064	118.9748	'AMARILLO SOUTH INTERCHANGE - G07-48T 230.00 230KV CKT 1'
12G	06NR	0	'FROM->TO'	G11_045	'JONES STATION - TUCO INTERCHANGE 230KV CKT 1'	351	0.30567	119.6973	'SWISHER COUNTY INTERCHANGE - TUCO INTERCHANGE 230KV CKT 1'
12G	06NR	0	'FROM->TO'	G11_045	'JONES STATION - TUCO INTERCHANGE 230KV CKT 1'	351	0.277	123.89	'TOLK STATION EAST - TUCO INTERCHANGE 230KV CKT 1'
12G	06NR	0	'FROM->TO'	G11_045	'JONES STATION - TUCO INTERCHANGE 230KV CKT 1'	351	0.2762	140.1215	'TOLK STATION EAST - TUCO INTERCHANGE 230KV CKT 1'
12G	06G11_045	0	'FROM->TO'	G11_045	'LUBBOCK EAST INTERCHANGE - TUCO INTERCHANGE 115KV CKT 1'	160	0.20401	105.4384	'JONES STATION - TUCO INTERCHANGE 230KV CKT 1'
12G	06NR	0	'FROM->TO'	G11_045	'LUBBOCK EAST INTERCHANGE - TUCO INTERCHANGE 115KV CKT 1'	160	0.14337	119.1326	'JONES STATION - TUCO INTERCHANGE 230KV CKT 1'
12G	06NR	0	'FROM->TO'	G11_045	'TUCO INTERCHANGE (GE M1022338) 345/230/13.2KV TRANSFORMER CKT 1'	560	0.137	105.86	'TUCO INTERCHANGE (UPDATE DATA) 345/230/13.2KV TRANSFORMER CKT 2'
12G	06NR	0	'FROM->TO'	G11_045	'TUCO INTERCHANGE (GE M1022338) 345/230/13.2KV TRANSFORMER CKT 1'	560	0.137	105.76	'TUCO INTERCHANGE (UPDATE DATA) 345/230/13.2KV TRANSFORMER CKT 2'
12G	06NR	0	'FROM->TO'	G11_045	'TUCO INTERCHANGE (UPDATE DATA) 345/230/13.2KV TRANSFORMER CKT 2'	560	0.134	103.51	'TUCO INTERCHANGE (GE M1022338) 345/230/13.2KV TRANSFORMER CKT 1'
12G	06NR	0	'FROM->TO'	G11_045	'TUCO INTERCHANGE (UPDATE DATA) 345/230/13.2KV TRANSFORMER CKT 2'	560	0.134	103.45	'TUCO INTERCHANGE (GE M1022338) 345/230/13.2KV TRANSFORMER CKT 1'
17SP	00NR	0	'FROM->TO'	G11_045	'LUBBOCK SOUTH INTERCHANGE (ABB LLM60043) 230/115/13.2KV TRANSFORMER CKT 1'	290	0.108	100.83	'LUBBOCK EAST INTERCHANGE (ENRCO 136162) 230/115/13.2KV TRANSFORMER CKT 1'
17SP	00NR	0	'FROM->TO'	G11_045	'LUBBOCK SOUTH INTERCHANGE (ABB LLM60043) 230/115/13.2KV TRANSFORMER CKT 1'	290	0.107	117.52	'Jones Station Bus#2 - LUBBOCK EAST INTERCHANGE 230KV CKT 1'
17SP	00NR	0	'FROM->TO'	G11_045	'LUBBOCK SOUTH INTERCHANGE (ABB LLM60043) 230/115/13.2KV TRANSFORMER CKT 1'	290	0.107	108.66	'Jones Station Bus#2 - LUBBOCK EAST INTERCHANGE 230KV CKT 1'
12G	06NR	0	'TO->FROM'	G11_045	'ALLEN SUB - LUBBOCK SOUTH INTERCHANGE 115KV CKT 1'	160	0.10338	108.0207	'JONES STATION - TUCO INTERCHANGE 230KV CKT 1'
12SP	00NR	0	'FROM->TO'	G11_045	'LUBBOCK SOUTH INTERCHANGE (ABB LLM60043) 230/115/13.2KV TRANSFORMER CKT 1'	290	0.103	104.43	'Jones Station Bus#2 - LUBBOCK EAST INTERCHANGE 230KV CKT 1'
13SP	00NR	0	'FROM->TO'	G11_045	'LUBBOCK SOUTH INTERCHANGE (ABB LLM60043) 230/115/13.2KV TRANSFORMER CKT 1'	290	0.102	108.47	'Jones Station Bus#2 - LUBBOCK EAST INTERCHANGE 230KV CKT 1'
13SP	00NR	0	'FROM->TO'	G11_045	'LUBBOCK SOUTH INTERCHANGE (ABB LLM60043) 230/115/13.2KV TRANSFORMER CKT 1'	290	0.102	101.62	'Jones Station Bus#2 - LUBBOCK EAST INTERCHANGE 230KV CKT 1'
17SP	00NR	0	'TO->FROM'	G11_045	'ALLEN SUB - LUBBOCK SOUTH INTERCHANGE 115KV CKT 1'	160	0.050	101.02	'WOLFFORTH INTERCHANGE - YUMA INTERCHANGE 115KV CKT 1'
12G	06NR	0	'TO->FROM'	G11_045	'FLOYD COUNTY INTERCHANGE - G11_025T 115.00 115KV CKT 1'	96	0.04335	101.131	'JONES STATION - TUCO INTERCHANGE 230KV CKT 1'
17SP	00NR	2	'FROM->TO'	G11_045	'Jones Station Bus#2 - LUBBOCK SOUTH INTERCHANGE 230KV CKT 2'	351	0.323	100.41	'JONES STATION - LUBBOCK SOUTH INTERCHANGE 230KV CKT 1'
13SP	00NR	2	'FROM->TO'	G11_045	'Jones Station Bus#2 - LUBBOCK SOUTH INTERCHANGE 230KV CKT 2'	351	0.31776	105.7498	'JONES STATION - LUBBOCK SOUTH INTERCHANGE 230KV CKT 1'
17SP	00NR	2	'FROM->TO'	G11_045	'Jones Station Bus#2 - LUBBOCK SOUTH INTERCHANGE 230KV CKT 2'	351	0.31717	111.7181	'JONES STATION - LUBBOCK SOUTH INTERCHANGE 230KV CKT 1'
12SP	00NR	2	'FROM->TO'	G11_045	'Jones Station Bus#2 - LUBBOCK SOUTH INTERCHANGE 230KV CKT 2'	351	0.31686	105.6266	'JONES STATION - LUBBOCK SOUTH INTERCHANGE 230KV CKT 1'
12WP	00NR	2	'FROM->TO'	G11_045	'TUCO INTERCHANGE (GE M1022338) 345/230/13.2KV TRANSFORMER CKT 1'	560	0.213	101.74	'TUCO INTERCHANGE (UPDATE DATA) 345/230/13.2KV TRANSFORMER CKT 2'
12WP	00NR	2	'FROM->TO'	G11_045	'TUCO INTERCHANGE (GE M1022338) 345/230/13.2KV TRANSFORMER CKT 1'	560	0.213	100.88	'TUCO INTERCHANGE (UPDATE DATA) 345/230/13.2KV TRANSFORMER CKT 2'
12G	06G11_045	2	'FROM->TO'	G11_045	'LUBBOCK EAST INTERCHANGE - TUCO INTERCHANGE 115KV CKT 1'	160	0.20759	104.5607	'JONES STATION - TUCO INTERCHANGE 230KV CKT 1'
12G	06NR	2	'FROM->TO'	G11_045	'TUCO INTERCHANGE (GE M1022338) 345/230/13.2KV TRANSFORMER CKT 1'	560	0.195	104.30	'TUCO INTERCHANGE (UPDATE DATA) 345/230/13.2KV TRANSFORMER CKT 2'
12G	06NR	2	'FROM->TO'	G11_045	'TUCO INTERCHANGE (GE M1022338) 345/230/13.2KV TRANSFORMER CKT 1'	560	0.195	103.20	'TUCO INTERCHANGE (UPDATE DATA) 345/230/13.2KV TRANSFORMER CKT 2'
12G	06NR	2	'FROM->TO'	G11_045	'TUCO INTERCHANGE (UPDATE DATA) 345/230/13.2KV TRANSFORMER CKT 2'	560	0.189	100.66	'TUCO INTERCHANGE (GE M1022338) 345/230/13.2KV TRANSFORMER CKT 1'
12G	06NR	2	'FROM->TO'	G11_045	'TUCO INTERCHANGE (UPDATE DATA) 345/230/13.2KV TRANSFORMER CKT 2'	560	0.189	100.00	'TUCO INTERCHANGE (GE M1022338) 345/230/13.2KV TRANSFORMER CKT 1'
12G	06NR	2	'FROM->TO'	G11_045	'LUBBOCK EAST INTERCHANGE - TUCO INTERCHANGE 115KV CKT 1'	160	0.14617	118.3733	'JONES STATION - TUCO INTERCHANGE 230KV CKT 1'
17SP	00NR	2	'FROM->TO'	G11_045	'LUBBOCK SOUTH INTERCHANGE (ABB LLM60043) 230/115/13.2KV TRANSFORMER CKT 1'	290	0.109	101.74	'LUBBOCK EAST INTERCHANGE (ENRCO 136162) 230/115/13.2KV TRANSFORMER CKT 1'
17SP	00NR	2	'FROM->TO'	G11_045	'LUBBOCK SOUTH INTERCHANGE (ABB LLM60043) 230/115/13.2KV TRANSFORMER CKT 1'	290	0.107	118.52	'Jones Station Bus#2 - LUBBOCK EAST INTERCHANGE 230KV CKT 1'
17SP	00NR	2	'FROM->TO'	G11_045	'LUBBOCK SOUTH INTERCHANGE (ABB LLM60043) 230/115/13.2KV TRANSFORMER CKT 1'	290	0.107	109.53	'Jones Station Bus#2 - LUBBOCK EAST INTERCHANGE 230KV CKT 1'
12G	06NR	2	'TO->FROM'	G11_045	'ALLEN SUB - LUBBOCK SOUTH INTERCHANGE 115KV CKT 1'	160	0.1048	108.1914	'JONES STATION - TUCO INTERCHANGE 230KV CKT 1'
12SP	00NR	2	'FROM->TO'	G11_045	'LUBBOCK SOUTH INTERCHANGE (ABB LLM60043) 230/115/13.2KV TRANSFORMER CKT 1'	290	0.104	105.37	'Jones Station Bus#2 - LUBBOCK EAST INTERCHANGE 230KV CKT 1'
13SP	00NR	2	'FROM->TO'	G11_045	'LUBBOCK SOUTH INTERCHANGE (ABB LLM60043) 230/115/13.2KV TRANSFORMER CKT 1'	290	0.103	109.27	'Jones Station Bus#2 - LUBBOCK EAST INTERCHANGE 230KV CKT 1'
13SP	00NR	2	'FROM->TO'	G11_045	'LUBBOCK SOUTH INTERCHANGE (ABB LLM60043) 230/115/13.2KV TRANSFORMER CKT 1'	290	0.103	102.37	'Jones Station Bus#2 - LUBBOCK EAST INTERCHANGE 230KV CKT 1'
17SP	00NR	2	'TO->FROM'	G11_045	'ALLEN SUB - LUBBOCK SOUTH INTERCHANGE 115KV CKT 1'	160	0.052	102.69	'WOLFFORTH INTERCHANGE - YUMA INTERCHANGE 115KV CKT 1'
12G	06NR	2	'TO->FROM'	G11_045	'FLOYD COUNTY INTERCHANGE - G11_025T 115.00 115KV CKT 1'	96	0.04349	100.7228	'JONES STATION - TUCO INTERCHANGE 230KV CKT 1'

SEASON	GROUP	SCENARIO	DIRECTION	SOURCE	MONITORED ELEMENT	RATE B (MVA)	TDF	(%MVA) LOADING	CONTINGENCY
12SP	00NR	2	'TO->FROM'	G11_045	'HALE CO INTERCHANGE - TUCO INTERCHANGE 115KV CKT 1'	96	0.03236	103.0888	'PLANT X STATION (WH ALM20171) 230/115/13.2KV TRANSFORMER CKT 1'
13SP	00NR	2	'TO->FROM'	G11_045	'HALE CO INTERCHANGE - TUCO INTERCHANGE 115KV CKT 1'	96	0.03206	102.7561	PLANT X STATION (WH ALM20171) 230/115/13.2KV TRANSFORMER CKT 1'
13SP	00NR	3	'FROM->TO'	G11_045	'Jones Station Bus#2 - LUBBOCK SOUTH INTERCHANGE 230KV CKT 2'	351	0.32846	114.8428	'JONES STATION - LUBBOCK SOUTH INTERCHANGE 230KV CKT 1'
17SP	00NR	3	'FROM->TO'	G11_045	'Jones Station Bus#2 - LUBBOCK SOUTH INTERCHANGE 230KV CKT 2'	351	0.32834	121.1078	'JONES STATION - LUBBOCK SOUTH INTERCHANGE 230KV CKT 1'
12SP	00NR	3	'FROM->TO'	G11_045	'Jones Station Bus#2 - LUBBOCK SOUTH INTERCHANGE 230KV CKT 2'	351	0.32763	115.2512	'JONES STATION - LUBBOCK SOUTH INTERCHANGE 230KV CKT 1'
12G	06NR	3	'FROM->TO'	G11_045	'LUBBOCK EAST INTERCHANGE - TUCO INTERCHANGE 115KV CKT 1'	160	0.1492	121.5771	'JONES STATION - TUCO INTERCHANGE 230KV CKT 1'
12G	06NR	3	'TO->FROM'	G11_045	'ALLEN SUB - LUBBOCK SOUTH INTERCHANGE 115KV CKT 1'	160	0.1146	118.4289	'JONES STATION - TUCO INTERCHANGE 230KV CKT 1'
17SP	00NR	3	'TO->FROM'	G11_045	'ALLEN SUB - LUBBOCK SOUTH INTERCHANGE 115KV CKT 1'	160	0.11455	100.972	'JONES STATION - TUCO INTERCHANGE 230KV CKT 1'
17SP	00NR	3	'TO->FROM'	G11_045	'LUBBOCK EAST INTERCHANGE - LUBBOCK SOUTH INTERCHANGE 115KV CKT 1'	160	0.07719	109.0431	'Jones Station Bus#2 - LUBBOCK EAST INTERCHANGE 230KV CKT 1'
17SP	00NR	3	'TO->FROM'	G11_045	'ALLEN SUB - LUBBOCK SOUTH INTERCHANGE 115KV CKT 1'	160	0.07682	106.1167	'WOLFFORTH INTERCHANGE (WH 7001668) 230/115/13.2KV TRANSFORMER CKT 1'
12SP	00NR	3	'TO->FROM'	G11_045	'LUBBOCK EAST INTERCHANGE - LUBBOCK SOUTH INTERCHANGE 115KV CKT 1'	160	0.07221	102.4688	'Jones Station Bus#2 - LUBBOCK EAST INTERCHANGE 230KV CKT 1'
13SP	00NR	3	'TO->FROM'	G11_045	'LUBBOCK EAST INTERCHANGE - LUBBOCK SOUTH INTERCHANGE 115KV CKT 1'	160	0.07166	104.0513	'Jones Station Bus#2 - LUBBOCK EAST INTERCHANGE 230KV CKT 1'
17SP	00NR	3	'TO->FROM'	G11_045	'ALLEN SUB - LUBBOCK SOUTH INTERCHANGE 115KV CKT 1'	160	0.05611	104.7117	'WOLFFORTH INTERCHANGE - YUMA INTERCHANGE 115KV CKT 1'
12G	06NR	3	'TO->FROM'	G11_045	'ALLEN SUB - LUBBOCK SOUTH INTERCHANGE 115KV CKT 1'	160	0.05525	100.154	'WOLFFORTH INTERCHANGE - YUMA INTERCHANGE 115KV CKT 1'
17SP	00NR	3	'TO->FROM'	G11_045	'ALLEN SUB - LUBBOCK SOUTH INTERCHANGE 115KV CKT 1'	160	0.05326	102.8308	'CARLISLE INTERCHANGE (WH XHS70711) 230/115/13.2KV TRANSFORMER CKT 1'
17SP	00NR	3	'TO->FROM'	G11_045	'ALLEN SUB - LUBBOCK SOUTH INTERCHANGE 115KV CKT 1'	160	0.05164	109.0435	'CARLISLE INTERCHANGE - TUCO INTERCHANGE 230KV CKT 1'
12SP	00NR	3	'TO->FROM'	G11_045	'ALLEN SUB - LUBBOCK SOUTH INTERCHANGE 115KV CKT 1'	160	0.05129	100.1938	'CARLISLE INTERCHANGE - TUCO INTERCHANGE 230KV CKT 1'
12G	06NR	3	'TO->FROM'	G11_045	'FLOYD COUNTY INTERCHANGE - G11_025T 115.00 115KV CKT 1'	96	0.04435	102.303	'JONES STATION - TUCO INTERCHANGE 230KV CKT 1'
12SP	00NR	3	'TO->FROM'	G11_045	'HALE CO INTERCHANGE - TUCO INTERCHANGE 115KV CKT 1'	96	0.03211	103.7594	'PLANT X STATION (WH ALM20171) 230/115/13.2KV TRANSFORMER CKT 1'
13SP	00NR	3	'TO->FROM'	G11_045	'HALE CO INTERCHANGE - TUCO INTERCHANGE 115KV CKT 1'	96	0.03182	103.4302	'PLANT X STATION (WH ALM20171) 230/115/13.2KV TRANSFORMER CKT 1'
12WP	0	0	'FROM->TO'	G11_046	'TUCO INTERCHANGE (GE M1022338) 345/230/13.2KV TRANSFORMER CKT 1'	560	0.367	121.62	'TUCO INTERCHANGE (UPDATE DATA) 345/230/13.2KV TRANSFORMER CKT 2'
12WP	0	0	'FROM->TO'	G11_046	'TUCO INTERCHANGE (GE M1022338) 345/230/13.2KV TRANSFORMER CKT 1'	560	0.367	121.40	'TUCO INTERCHANGE (UPDATE DATA) 345/230/13.2KV TRANSFORMER CKT 2'
13WP	0	0	'FROM->TO'	G11_046	'TUCO INTERCHANGE (GE M1022338) 345/230/13.2KV TRANSFORMER CKT 1'	560	0.366	120.36	'TUCO INTERCHANGE (UPDATE DATA) 345/230/13.2KV TRANSFORMER CKT 2'
13WP	0	0	'FROM->TO'	G11_046	'TUCO INTERCHANGE (GE M1022338) 345/230/13.2KV TRANSFORMER CKT 1'	560	0.366	120.04	'TUCO INTERCHANGE (UPDATE DATA) 345/230/13.2KV TRANSFORMER CKT 2'
12WP	0	0	'FROM->TO'	G11_046	'TUCO INTERCHANGE (UPDATE DATA) 345/230/13.2KV TRANSFORMER CKT 2'	560	0.358	118.80	'TUCO INTERCHANGE (GE M1022338) 345/230/13.2KV TRANSFORMER CKT 1'
12WP	0	0	'FROM->TO'	G11_046	'TUCO INTERCHANGE (UPDATE DATA) 345/230/13.2KV TRANSFORMER CKT 2'	560	0.358	118.70	'TUCO INTERCHANGE (GE M1022338) 345/230/13.2KV TRANSFORMER CKT 1'
13WP	0	0	'FROM->TO'	G11_046	'TUCO INTERCHANGE (UPDATE DATA) 345/230/13.2KV TRANSFORMER CKT 2'	560	0.357	117.56	'TUCO INTERCHANGE (GE M1022338) 345/230/13.2KV TRANSFORMER CKT 1'
13WP	0	0	'FROM->TO'	G11_046	'TUCO INTERCHANGE (UPDATE DATA) 345/230/13.2KV TRANSFORMER CKT 2'	560	0.357	117.39	'TUCO INTERCHANGE (GE M1022338) 345/230/13.2KV TRANSFORMER CKT 1'
12SP	00NR	0	'FROM->TO'	G11_046	'PLANT X STATION (WH ALM20171) 230/115/13.2KV TRANSFORMER CKT 1'	239	0.044	112.17	'LAMB COUNTY INTERCHANGE (WH ALM20172) 230/115/13.2KV TRANSFORMER CKT 1'
12SP	00NR	0	'FROM->TO'	G11_046	'PLANT X STATION (WH ALM20171) 230/115/13.2KV TRANSFORMER CKT 1'	239	0.044	112.16	'LAMB COUNTY INTERCHANGE - TOLK STATION WEST 230KV CKT 1'
12SP	00NR	0	'FROM->TO'	G11_046	'PLANT X STATION (WH ALM20171) 230/115/13.2KV TRANSFORMER CKT 1'	239	0.044	112.09	'LAMB COUNTY INTERCHANGE - TOLK STATION WEST 230KV CKT 1'
12SP	00NR	0	'FROM->TO'	G11_046	'PLANT X STATION (WH ALM20171) 230/115/13.2KV TRANSFORMER CKT 1'	239	0.044	112.09	'LAMB COUNTY INTERCHANGE (WH ALM20172) 230/115/13.2KV TRANSFORMER CKT 1'
13SP	00NR	0	'FROM->TO'	G11_046	'PLANT X STATION (WH ALM20171) 230/115/13.2KV TRANSFORMER CKT 1'	239	0.044	110.75	'LAMB COUNTY INTERCHANGE - TOLK STATION WEST 230KV CKT 1'
13SP	00NR	0	'FROM->TO'	G11_046	'PLANT X STATION (WH ALM20171) 230/115/13.2KV TRANSFORMER CKT 1'	239	0.044	110.74	'LAMB COUNTY INTERCHANGE (WH ALM20172) 230/115/13.2KV TRANSFORMER CKT 1'
13SP	00NR	0	'FROM->TO'	G11_046	'PLANT X STATION (WH ALM20171) 230/115/13.2KV TRANSFORMER CKT 1'	239	0.044	110.33	'LAMB COUNTY INTERCHANGE - TOLK STATION WEST 230KV CKT 1'
13SP	00NR	0	'FROM->TO'	G11_046	'PLANT X STATION (WH ALM20171) 230/115/13.2KV TRANSFORMER CKT 1'	239	0.044	110.32	'LAMB COUNTY INTERCHANGE (WH ALM20172) 230/115/13.2KV TRANSFORMER CKT 1'
12SP	00NR	0	'FROM->TO'	G11_046	'PLANT X STATION (WH ALM20171) 230/115/13.2KV TRANSFORMER CKT 1'	239	0.038	107.07	'SPP-SWPS-T04'
12SP	00NR	0	'FROM->TO'	G11_046	'PLANT X STATION (WH ALM20171) 230/115/13.2KV TRANSFORMER CKT 1'	239	0.038	106.60	'SPP-SWPS-T04'
13SP	00NR	0	'FROM->TO'	G11_046	'PLANT X STATION (WH ALM20171) 230/115/13.2KV TRANSFORMER CKT 1'	239	0.038	105.35	'SPP-SWPS-T04'
13SP	00NR	0	'FROM->TO'	G11_046	'PLANT X STATION (WH ALM20171) 230/115/13.2KV TRANSFORMER CKT 1'	239	0.038	105.25	'SPP-SWPS-T04'
12G	06NR	0	'FROM->TO'	G11_046	'PLANT X STATION (WH ALM20171) 230/115/13.2KV TRANSFORMER CKT 1'	239	0.034	100.55	'LAMB COUNTY INTERCHANGE (WH ALM20172) 230/115/13.2KV TRANSFORMER CKT 1'
12G	06NR	0	'FROM->TO'	G11_046	'PLANT X STATION (WH ALM20171) 230/115/13.2KV TRANSFORMER CKT 1'	239	0.034	100.49	'LAMB COUNTY INTERCHANGE - TOLK STATION WEST 230KV CKT 1'
12G	06NR	0	'FROM->TO'	G11_046	'TUCO INTERCHANGE (GE M1022338) 345/230/13.2KV TRANSFORMER CKT 1'	560	0.033	105.86	'TUCO INTERCHANGE (UPDATE DATA) 345/230/13.2KV TRANSFORMER CKT 2'
12G	06NR	0	'FROM->TO'	G11_046	'TUCO INTERCHANGE (GE M1022338) 345/230/13.2KV TRANSFORMER CKT 1'	560	0.033	105.76	'TUCO INTERCHANGE (UPDATE DATA) 345/230/13.2KV TRANSFORMER CKT 2'
12G	06NR	0	'FROM->TO'	G11_046	'TUCO INTERCHANGE (UPDATE DATA) 345/230/13.2KV TRANSFORMER CKT 2'	560	0.032	103.51	'TUCO INTERCHANGE (GE M1022338) 345/230/13.2KV TRANSFORMER CKT 1'
12G	06NR	0	'FROM->TO'	G11_046	'TUCO INTERCHANGE (UPDATE DATA) 345/230/13.2KV TRANSFORMER CKT 2'	560	0.032	103.45	'TUCO INTERCHANGE (GE M1022338) 345/230/13.2KV TRANSFORMER CKT 1'
12WP	00NR	2	'FROM->TO'	G11_046	'TUCO INTERCHANGE (GE M1022338) 345/230/13.2KV TRANSFORMER CKT 1'	560	0.062	101.74	'TUCO INTERCHANGE (UPDATE DATA) 345/230/13.2KV TRANSFORMER CKT 2'
12WP	00NR	2	'FROM->TO'	G11_046	'TUCO INTERCHANGE (GE M1022338) 345/230/13.2KV TRANSFORMER CKT 1'	560	0.062	100.88	'TUCO INTERCHANGE (UPDATE DATA) 345/230/13.2KV TRANSFORMER CKT 2'
12SP	00NR	2	'FROM->TO'	G11_046	'PLANT X STATION (WH ALM20171) 230/115/13.2KV TRANSFORMER CKT 1'	239	0.045	103.78	'TOLK STATION EAST - TUCO INTERCHANGE 230KV CKT 1'
12SP	00NR	2	'FROM->TO'	G11_046	'PLANT X STATION (WH ALM20171) 230/115/13.2KV TRANSFORMER CKT 1'	239	0.045	103.12	'TOLK STATION EAST - TUCO INTERCHANGE 230KV CKT 1'
13SP	00NR	2	'FROM->TO'	G11_046	'PLANT X STATION (WH ALM20171) 230/115/13.2KV TRANSFORMER CKT 1'	239	0.045	101.40	'TOLK STATION EAST - TUCO INTERCHANGE 230KV CKT 1'
13SP	00NR	2	'FROM->TO'	G11_046	'PLANT X STATION (WH ALM20171) 230/115/13.2KV TRANSFORMER CKT 1'	239	0.045	101.05	'TOLK STATION EAST - TUCO INTERCHANGE 230KV CKT 1'
12G	06NR	2	'FROM->TO'	G11_046	'TUCO INTERCHANGE (GE M1022338) 345/230/13.2KV TRANSFORMER CKT 1'	560	0.044	104.30	'TUCO INTERCHANGE (UPDATE DATA) 345/230/13.2KV TRANSFORMER CKT 2'
12G	06NR	2	'FROM->TO'	G11_046	'TUCO INTERCHANGE (GE M1022338) 345/230/13.2KV TRANSFORMER CKT 1'	560	0.044	103.20	'TUCO INTERCHANGE (UPDATE DATA) 345/230/13.2KV TRANSFORMER CKT 2'
12G	06NR	2	'FROM->TO'	G11_046	'TUCO INTERCHANGE (UPDATE DATA) 345/230/13.2KV TRANSFORMER CKT 2'	560	0.043	100.66	'TUCO INTERCHANGE (GE M1022338) 345/230/13.2KV TRANSFORMER CKT 1'
12G	06NR	2	'FROM->TO'	G11_046	'TUCO INTERCHANGE (UPDATE DATA) 345/230/13.2KV TRANSFORMER CKT 2'	560	0.043	100.00	'TUCO INTERCHANGE (GE M1022338) 345/230/13.2KV TRANSFORMER CKT 1'
12SP	00NR	2	'FROM->TO'	G11_046	'PLANT X STATION (WH ALM20171) 230/115/13.2KV TRANSFORMER CKT 1'	239	0.041	119.14	'LAMB COUNTY INTERCHANGE (WH ALM20172) 230/115/13.2KV TRANSFORMER CKT 1'
12SP	00NR	2	'FROM->TO'	G11_046	'PLANT X STATION (WH ALM20171) 230/115/13.2KV TRANSFORMER CKT 1'	239	0.041	119.12	'LAMB COUNTY INTERCHANGE - TOLK STATION WEST 230KV CKT 1'
12SP	00NR	2	'FROM->TO'	G11_046	'PLANT X STATION (WH ALM20171) 230/115/13.2KV TRANSFORMER CKT 1'	239	0.041	118.97	'LAMB COUNTY INTERCHANGE - TOLK STATION WEST 230KV CKT 1'
12SP	00NR	2	'FROM->TO'	G11_046	'PLANT X STATION (WH ALM20171) 230/115/13.2KV TRANSFORMER CKT 1'	239	0.041	118.96	'LAMB COUNTY INTERCHANGE (WH ALM20172) 230/115/13.2KV TRANSFORMER CKT 1'
13SP	00NR	2	'FROM->TO'	G11_046	'PLANT X STATION (WH ALM20171) 230/115/13.2KV TRANSFORMER CKT 1'	239	0.041	117.87	'LAMB COUNTY INTERCHANGE - TOLK STATION WEST 230KV CKT 1'
13SP	00NR	2	'FROM->TO'	G11_046	'PLANT X STATION (WH ALM20171) 230/115/13.2KV TRANSFORMER CKT 1'	239	0.041	117.85	'LAMB COUNTY INTERCHANGE (WH ALM20172) 230/115/13.2KV TRANSFORMER CKT 1'
13SP	00NR	2	'FROM->TO'	G11_046	'PLANT X STATION (WH ALM20171) 230/115/13.2KV TRANSFORMER CKT 1'	239	0.041	117.35	'LAMB COUNTY INTERCHANGE - TOLK STATION WEST 230KV CKT 1'
13SP	00NR	2	'FROM->TO'	G11_046	'PLANT X STATION (WH ALM20171) 230/115/13.2KV TRANSFORMER CKT 1'	239	0.041	117.33	'LAMB COUNTY INTERCHANGE (WH ALM20172) 230/115/13.2KV TRANSFORMER CKT 1'
12SP	00NR	2	'FROM->TO'	G11_046	'PLANT X STATION (WH ALM20171) 230/115/13.2KV TRANSFORMER CKT 1'	239	0.037	110.19	'SPP-SWPS-T04'
12SP	00NR	2	'FROM->TO'	G11_046	'PLANT X STATION (WH ALM20171) 230/115/13.2KV TRANSFORMER CKT 1'	239	0.037	109.70	'SPP-SWPS-T04'
13SP	00NR	2	'FROM->TO'	G11_046	'PLANT X STATION (WH ALM20171) 230/115/13.2KV TRANSFORMER CKT 1'	239	0.037	108.59	'SPP-SWPS-T04'
13SP	00NR	2	'FROM->TO'	G11_046	'PLANT X STATION (WH ALM20171) 230/115/13.2KV TRANSFORMER CKT 1'	239	0.037	108.50	'SPP-SWPS-T04'
12G	06NR	2	'FROM->TO'	G11_046	'PLANT X STATION (WH ALM20171) 230/115/13.2KV TRANSFORMER CKT 1'	239	0.034	100.18	'LAMB COUNTY INTERCHANGE (WH ALM20172) 230/115/13.2KV TRANSFORMER CKT 1'
12G	06NR	2	'FROM->TO'	G11_046	'PLANT X STATION (WH ALM20171) 230/115/13.2KV TRANSFORMER CKT 1'	239	0.034	100.16	'LAMB COUNTY INTERCHANGE - TOLK STATION WEST 230KV CKT 1'
12SP	00NR	2	'FROM->TO'	G11_046	'PLANT X STATION (WH ALM20171) 230/115/13.2KV TRANSFORMER CKT 1'	239	0.034	101.84	'DEAF SMITH COUNTY INTERCHANGE - PLANT X STATION 230KV CKT 1'
12SP	00NR	2	'FROM->TO'	G11_046	'PLANT X STATION (WH ALM20171) 230/115/13.2KV TRANSFORMER CKT 1'	239	0.034	101.39	'DEAF SMITH COUNTY INTERCHANGE - PLANT X STATION 230KV CKT 1'
12SP	00NR	2	'FROM->TO'	G11_046	'PLANT X STATION (WH ALM20171) 230/115/13.2KV TRANSFORMER CKT 1'	239	0.030	102.89	'LAMB COUNTY INTERCHANGE - PLANT X STATION 115KV CKT 1'
12SP	00NR	2	'FROM->TO'	G11_046	'PLANT X STATION (WH ALM20171) 230/115/13.2KV TRANSFORMER CKT 1'	239	0.030	102.29	'LAMB COUNTY INTERCHANGE - PLANT X STATION 115KV CKT 1'
12SP	00NR	3	'FROM->TO'	G11_046	'PLANT X STATION (WH ALM20171) 230/115/13.2KV TRANSFORMER CKT 1'	239	0.046	102.74	'TOLK STATION EAST - TUCO INTERCHANGE 230KV CKT 1'
12SP	00NR	3	'FROM->TO'	G11_046	'PLANT X STATION (WH ALM20171) 230/115/13.2KV TRANSFORMER CKT 1'	239	0.046	102.09	'TOLK STATION EAST - TUCO INTERCHANGE 230KV CKT 1'
13SP	00NR	3	'FROM->TO'	G11_046	'PLANT X STATION (WH ALM20171) 230/115/13.2KV TRANSFORMER CKT 1'	239	0.045	100.36	'TOLK STATION EAST - TUCO INTERCHANGE 230KV CKT 1'
13SP	00NR	3	'FROM->TO'	G11_046	'PLANT X STATION (WH ALM20171) 230/115/13.2KV TRANSFORMER CKT 1'	239	0.045	100.00	'TOLK STATION EAST - TUCO INTERCHANGE 230KV CKT 1'

SEASON	GROUP	SCENARIO	DIRECTION	SOURCE	MONITORED ELEMENT	RATE B (MVA)	TDF	(%MVA) LOADING	CONTINGENCY
12SP	00NR	3	'FROM->TO'	G11_046	'PLANT X STATION (WH_ALM20171) 230/115/13.2KV TRANSFORMER CKT 1'	239	0.042	118.10	'LAMB COUNTY INTERCHANGE - TOLK STATION WEST 230KV CKT 1'
12SP	00NR	3	'FROM->TO'	G11_046	'PLANT X STATION (WH_ALM20171) 230/115/13.2KV TRANSFORMER CKT 1'	239	0.042	118.09	'LAMB COUNTY INTERCHANGE (WH_ALM20172) 230/115/13.2KV TRANSFORMER CKT 1'
12SP	00NR	3	'FROM->TO'	G11_046	'PLANT X STATION (WH_ALM20171) 230/115/13.2KV TRANSFORMER CKT 1'	239	0.042	117.62	'LAMB COUNTY INTERCHANGE (WH_ALM20172) 230/115/13.2KV TRANSFORMER CKT 1'
12SP	00NR	3	'FROM->TO'	G11_046	'PLANT X STATION (WH_ALM20171) 230/115/13.2KV TRANSFORMER CKT 1'	239	0.042	117.60	'LAMB COUNTY INTERCHANGE - TOLK STATION WEST 230KV CKT 1'
13SP	00NR	3	'FROM->TO'	G11_046	'PLANT X STATION (WH_ALM20171) 230/115/13.2KV TRANSFORMER CKT 1'	239	0.042	116.20	'LAMB COUNTY INTERCHANGE - TOLK STATION WEST 230KV CKT 1'
13SP	00NR	3	'FROM->TO'	G11_046	'PLANT X STATION (WH_ALM20171) 230/115/13.2KV TRANSFORMER CKT 1'	239	0.042	116.19	'LAMB COUNTY INTERCHANGE (WH_ALM20172) 230/115/13.2KV TRANSFORMER CKT 1'
13SP	00NR	3	'FROM->TO'	G11_046	'PLANT X STATION (WH_ALM20171) 230/115/13.2KV TRANSFORMER CKT 1'	239	0.042	115.70	'LAMB COUNTY INTERCHANGE - TOLK STATION WEST 230KV CKT 1'
13SP	00NR	3	'FROM->TO'	G11_046	'PLANT X STATION (WH_ALM20171) 230/115/13.2KV TRANSFORMER CKT 1'	239	0.042	115.69	'LAMB COUNTY INTERCHANGE (WH_ALM20172) 230/115/13.2KV TRANSFORMER CKT 1'
12SP	00NR	3	'FROM->TO'	G11_046	'PLANT X STATION (WH_ALM20171) 230/115/13.2KV TRANSFORMER CKT 1'	239	0.037	108.74	'SPP-SWPS-T04'
12SP	00NR	3	'FROM->TO'	G11_046	'PLANT X STATION (WH_ALM20171) 230/115/13.2KV TRANSFORMER CKT 1'	239	0.037	108.60	'SPP-SWPS-T04'
13SP	00NR	3	'FROM->TO'	G11_046	'PLANT X STATION (WH_ALM20171) 230/115/13.2KV TRANSFORMER CKT 1'	239	0.037	107.14	'SPP-SWPS-T04'
13SP	00NR	3	'FROM->TO'	G11_046	'PLANT X STATION (WH_ALM20171) 230/115/13.2KV TRANSFORMER CKT 1'	239	0.037	106.95	'SPP-SWPS-T04'
12G	06NR	3	'FROM->TO'	G11_046	'PLANT X STATION (WH_ALM20171) 230/115/13.2KV TRANSFORMER CKT 1'	239	0.035	100.00	'LAMB COUNTY INTERCHANGE - TOLK STATION WEST 230KV CKT 1'
12G	06NR	3	'FROM->TO'	G11_046	'PLANT X STATION (WH_ALM20171) 230/115/13.2KV TRANSFORMER CKT 1'	239	0.035	100.00	'LAMB COUNTY INTERCHANGE (WH_ALM20172) 230/115/13.2KV TRANSFORMER CKT 1'
12SP	00NR	3	'FROM->TO'	G11_046	'PLANT X STATION (WH_ALM20171) 230/115/13.2KV TRANSFORMER CKT 1'	239	0.035	100.37	'DEAF SMITH COUNTY INTERCHANGE - PLANT X STATION 230KV CKT 1'
12SP	00NR	3	'FROM->TO'	G11_046	'PLANT X STATION (WH_ALM20171) 230/115/13.2KV TRANSFORMER CKT 1'	239	0.031	101.12	'LAMB COUNTY INTERCHANGE - PLANT X STATION 115KV CKT 1'
12SP	00NR	3	'FROM->TO'	G11_046	'PLANT X STATION (WH_ALM20171) 230/115/13.2KV TRANSFORMER CKT 1'	239	0.031	100.54	'LAMB COUNTY INTERCHANGE - PLANT X STATION 115KV CKT 1'
17WP	0	0	'FROM->TO'	G11_048	'MUSTANG STATION - YOAKUM COUNTY INTERCHANGE 230KV CKT 1'	361	0.658	102.44	'AMOCO WASSON SWITCHING STATION - MUSTANG STATION 230KV CKT 1'
12SP	0	0	'FROM->TO'	G11_048	'MUSTANG STATION - YOAKUM COUNTY INTERCHANGE 230KV CKT 1'	351	0.656	100.30	'AMOCO WASSON SWITCHING STATION - MUSTANG STATION 230KV CKT 1'
13WP	0	0	'FROM->TO'	G11_048	'MUSTANG STATION - YOAKUM COUNTY INTERCHANGE 230KV CKT 1'	361	0.655	106.62	'AMOCO WASSON SWITCHING STATION - MUSTANG STATION 230KV CKT 1'
12WP	0	0	'FROM->TO'	G11_048	'MUSTANG STATION - YOAKUM COUNTY INTERCHANGE 230KV CKT 1'	361	0.655	106.96	'AMOCO WASSON SWITCHING STATION - MUSTANG STATION 230KV CKT 1'
13WP	00NR	0	'FROM->TO'	G11_048	'MUSTANG STATION - YOAKUM COUNTY INTERCHANGE 230KV CKT 1'	361	0.547	100.96	'AMOCO WASSON SWITCHING STATION - MUSTANG STATION 230KV CKT 1'
12WP	00NR	0	'FROM->TO'	G11_048	'MUSTANG STATION - YOAKUM COUNTY INTERCHANGE 230KV CKT 1'	361	0.545	102.06	'AMOCO WASSON SWITCHING STATION - MUSTANG STATION 230KV CKT 1'
12WP	0	0	'FROM->TO'	G11_048	'TUCO INTERCHANGE (GE_M1022338) 345/230/13.2KV TRANSFORMER CKT 1'	560	0.411	121.62	'TUCO INTERCHANGE (UPDATE DATA) 345/230/13.2KV TRANSFORMER CKT 2'
12WP	0	0	'FROM->TO'	G11_048	'TUCO INTERCHANGE (GE_M1022338) 345/230/13.2KV TRANSFORMER CKT 1'	560	0.411	121.40	'TUCO INTERCHANGE (UPDATE DATA) 345/230/13.2KV TRANSFORMER CKT 2'
13WP	0	0	'FROM->TO'	G11_048	'TUCO INTERCHANGE (GE_M1022338) 345/230/13.2KV TRANSFORMER CKT 1'	560	0.410	120.36	'TUCO INTERCHANGE (UPDATE DATA) 345/230/13.2KV TRANSFORMER CKT 2'
13WP	0	0	'FROM->TO'	G11_048	'TUCO INTERCHANGE (GE_M1022338) 345/230/13.2KV TRANSFORMER CKT 1'	560	0.410	120.04	'TUCO INTERCHANGE (UPDATE DATA) 345/230/13.2KV TRANSFORMER CKT 2'
12WP	0	0	'FROM->TO'	G11_048	'TUCO INTERCHANGE (UPDATE DATA) 345/230/13.2KV TRANSFORMER CKT 2'	560	0.401	118.80	'TUCO INTERCHANGE (GE_M1022338) 345/230/13.2KV TRANSFORMER CKT 1'
12WP	0	0	'FROM->TO'	G11_048	'TUCO INTERCHANGE (UPDATE DATA) 345/230/13.2KV TRANSFORMER CKT 2'	560	0.401	118.70	'TUCO INTERCHANGE (GE_M1022338) 345/230/13.2KV TRANSFORMER CKT 1'
13WP	0	0	'FROM->TO'	G11_048	'TUCO INTERCHANGE (UPDATE DATA) 345/230/13.2KV TRANSFORMER CKT 2'	560	0.400	117.56	'TUCO INTERCHANGE (GE_M1022338) 345/230/13.2KV TRANSFORMER CKT 1'
13WP	0	0	'FROM->TO'	G11_048	'TUCO INTERCHANGE (UPDATE DATA) 345/230/13.2KV TRANSFORMER CKT 2'	560	0.400	117.39	'TUCO INTERCHANGE (GE_M1022338) 345/230/13.2KV TRANSFORMER CKT 1'
12G	06G11_048	0	'FROM->TO'	G11_048	'JONES STATION - TUCO INTERCHANGE 230KV CKT 1'	351	0.22796	109.1335	'TOLK STATION EAST - TUCO INTERCHANGE 230KV CKT 1'
12WP	0	0	'FROM->TO'	G11_048	'JONES STATION - TUCO INTERCHANGE 230KV CKT 1'	361	0.222	102.83	'TOLK STATION EAST - TUCO INTERCHANGE 230KV CKT 1'
13WP	0	0	'FROM->TO'	G11_048	'JONES STATION - TUCO INTERCHANGE 230KV CKT 1'	361	0.221	105.25	'TOLK STATION EAST - TUCO INTERCHANGE 230KV CKT 1'
12G	06NR	0	'FROM->TO'	G11_048	'JONES STATION - TUCO INTERCHANGE 230KV CKT 1'	351	0.07969	118.2301	'PLANT X STATION - SUNDOWN INTERCHANGE 230KV CKT 1'
12G	06NR	0	'FROM->TO'	G11_048	'TUCO INTERCHANGE (GE_M1022338) 345/230/13.2KV TRANSFORMER CKT 1'	560	0.077	105.86	'TUCO INTERCHANGE (UPDATE DATA) 345/230/13.2KV TRANSFORMER CKT 2'
12G	06NR	0	'FROM->TO'	G11_048	'TUCO INTERCHANGE (GE_M1022338) 345/230/13.2KV TRANSFORMER CKT 1'	560	0.077	105.76	'TUCO INTERCHANGE (UPDATE DATA) 345/230/13.2KV TRANSFORMER CKT 2'
12G	06NR	0	'FROM->TO'	G11_048	'TUCO INTERCHANGE (UPDATE DATA) 345/230/13.2KV TRANSFORMER CKT 2'	560	0.075	103.51	'TUCO INTERCHANGE (GE_M1022338) 345/230/13.2KV TRANSFORMER CKT 1'
12G	06NR	0	'FROM->TO'	G11_048	'TUCO INTERCHANGE (UPDATE DATA) 345/230/13.2KV TRANSFORMER CKT 2'	560	0.075	103.45	'TUCO INTERCHANGE (GE_M1022338) 345/230/13.2KV TRANSFORMER CKT 1'
12G	06NR	0	'FROM->TO'	G11_048	'JONES STATION - TUCO INTERCHANGE 230KV CKT 1'	351	0.065	106.68	'WOLFFORTH INTERCHANGE - YUMA INTERCHANGE 115KV CKT 1'
12G	06NR	0	'FROM->TO'	G11_048	'JONES STATION - TUCO INTERCHANGE 230KV CKT 1'	351	0.065	105.30	'LP-DOUD_TP 3115.00 - YUMA INTERCHANGE 115KV CKT 1'
12G	06NR	0	'FROM->TO'	G11_048	'JONES STATION - TUCO INTERCHANGE 230KV CKT 1'	351	0.065	104.10	'CARLISLE INTERCHANGE - LP-DOUD_TP 3115.00 115KV CKT 1'
12G	06NR	0	'FROM->TO'	G11_048	'JONES STATION - TUCO INTERCHANGE 230KV CKT 1'	351	0.06242	125.2739	'CARLISLE INTERCHANGE - LP-DOUD_TP 3115.00 115KV CKT 1'
12G	06NR	0	'FROM->TO'	G11_048	'JONES STATION - TUCO INTERCHANGE 230KV CKT 1'	351	0.06242	126.4968	'LP-DOUD_TP 3115.00 - YUMA INTERCHANGE 115KV CKT 1'
12G	06NR	0	'FROM->TO'	G11_048	'JONES STATION - TUCO INTERCHANGE 230KV CKT 1'	351	0.06242	127.8806	'WOLFFORTH INTERCHANGE - YUMA INTERCHANGE 115KV CKT 1'
12G	06NR	0	'FROM->TO'	G11_048	'JONES STATION - TUCO INTERCHANGE 230KV CKT 1'	351	0.061	102.07	'CARLISLE INTERCHANGE (WH_XHS70711) 230/115/13.2KV TRANSFORMER CKT 1'
12G	06NR	0	'FROM->TO'	G11_048	'JONES STATION - TUCO INTERCHANGE 230KV CKT 1'	351	0.06043	122.7637	'CARLISLE INTERCHANGE - TUCO INTERCHANGE 230KV CKT 1'
12G	06NR	0	'FROM->TO'	G11_048	'JONES STATION - TUCO INTERCHANGE 230KV CKT 1'	351	0.0581	123.9029	'CARLISLE INTERCHANGE (WH_XHS70711) 230/115/13.2KV TRANSFORMER CKT 1'
12G	06NR	0	'FROM->TO'	G11_048	'JONES STATION - TUCO INTERCHANGE 230KV CKT 1'	351	0.057	101.84	'CHAVESCO 345.00 - TOLK STATION 345KV CKT 1'
12G	06NR	0	'FROM->TO'	G11_048	'JONES STATION - TUCO INTERCHANGE 230KV CKT 1'	351	0.057	101.83	'TOLK STATION (ABBXNL844501) 345/230/13.2KV TRANSFORMER CKT 1'
12G	06NR	0	'FROM->TO'	G11_048	'JONES STATION - TUCO INTERCHANGE 230KV CKT 1'	351	0.057	100.62	'DEAF SMITH COUNTY INTERCHANGE - S-RANDLCO 230.00 230KV CKT 1'
12G	06NR	0	'FROM->TO'	G11_048	'JONES STATION - TUCO INTERCHANGE 230KV CKT 1'	351	0.057	123.89	'TOLK STATION EAST - TUCO INTERCHANGE 230KV CKT 1'
12G	06NR	0	'FROM->TO'	G11_048	'JONES STATION - TUCO INTERCHANGE 230KV CKT 1'	351	0.0566	140.1215	'TOLK STATION EAST - TUCO INTERCHANGE 230KV CKT 1'
12G	06NR	0	'FROM->TO'	G11_048	'JONES STATION - TUCO INTERCHANGE 230KV CKT 1'	351	0.056	103.20	'DEAF SMITH COUNTY INTERCHANGE - PLANT X STATION 230KV CKT 1'
12G	06NR	0	'FROM->TO'	G11_048	'JONES STATION - TUCO INTERCHANGE 230KV CKT 1'	351	0.056	108.99	'LUBBOCK EAST INTERCHANGE - TUCO INTERCHANGE 115KV CKT 1'
12G	06NR	0	'FROM->TO'	G11_048	'JONES STATION - TUCO INTERCHANGE 230KV CKT 1'	351	0.056	102.65	'CARLISLE INTERCHANGE - SOUTH PLAINS REC-ERSKINE 115KV CKT 1'
12G	06NR	0	'FROM->TO'	G11_048	'JONES STATION - TUCO INTERCHANGE 230KV CKT 1'	351	0.056	102.42	'SPP-SWPS-V62'
12G	06NR	0	'FROM->TO'	G11_048	'JONES STATION - TUCO INTERCHANGE 230KV CKT 1'	351	0.056	102.07	'INDIANA SUB - SOUTH PLAINS REC-ERSKINE 115KV CKT 1'
12G	06NR	0	'FROM->TO'	G11_048	'JONES STATION - TUCO INTERCHANGE 230KV CKT 1'	351	0.056	100.66	'INDIANA SUB - STANTON SUB 115KV CKT 1'
12G	06NR	0	'FROM->TO'	G11_048	'JONES STATION - TUCO INTERCHANGE 230KV CKT 1'	351	0.055	102.06	'PLANT X STATION - S-RANDLCO 230.00 230KV CKT 1'
12G	06NR	0	'FROM->TO'	G11_048	'JONES STATION - TUCO INTERCHANGE 230KV CKT 1'	351	0.055	102.50	'POTTER COUNTY INTERCHANGE - S-RANDLCO 230.00 230KV CKT 1'
13SP	00NR	0	'FROM->TO'	G11_048	'WOLFFORTH INTERCHANGE - YUMA INTERCHANGE 115KV CKT 1'	160	0.055	100.18	'ALLEN SUB - LUBBOCK SOUTH INTERCHANGE 115KV CKT 1'
12G	06NR	0	'FROM->TO'	G11_048	'JONES STATION - TUCO INTERCHANGE 230KV CKT 1'	351	0.054	101.87	'BUSHLAND INTERCHANGE - S-RANDLCO 230.00 230KV CKT 1'
12G	06NR	0	'FROM->TO'	G11_048	'JONES STATION - TUCO INTERCHANGE 230KV CKT 1'	351	0.05396	124.2535	'DEAF SMITH COUNTY INTERCHANGE - PLANT X STATION 230KV CKT 1'
12G	06NR	0	'FROM->TO'	G11_048	'JONES STATION - TUCO INTERCHANGE 230KV CKT 1'	351	0.05389	117.3996	'CHAVESCO 345.00 - EDDY COUNTY INTERCHANGE 345KV CKT 1'
12G	06NR	0	'FROM->TO'	G11_048	'JONES STATION - TUCO INTERCHANGE 230KV CKT 1'	351	0.05389	123.5443	'CHAVESCO 345.00 - TOLK STATION 345KV CKT 1'
12G	06NR	0	'FROM->TO'	G11_048	'JONES STATION - TUCO INTERCHANGE 230KV CKT 1'	351	0.05389	117.402	'EDDY COUNTY INTERCHANGE (ABB AEM30711) 345/230/13.2KV TRANSFORMER CKT 1'
12G	06NR	0	'FROM->TO'	G11_048	'JONES STATION - TUCO INTERCHANGE 230KV CKT 1'	351	0.05389	123.5271	'TOLK STATION (ABBXNL844501) 345/230/13.2KV TRANSFORMER CKT 1'
12G	06NR	0	'FROM->TO'	G11_048	'JONES STATION - TUCO INTERCHANGE 230KV CKT 1'	351	0.054	101.75	'OASIS INTERCHANGE - SAN JUAN MESA TAP 230KV CKT 1'
12G	06NR	0	'FROM->TO'	G11_048	'JONES STATION - TUCO INTERCHANGE 230KV CKT 1'	351	0.05362	119.8914	'HOCKLEY COUNTY INTERCHANGE - LAMB COUNTY INTERCHANGE 115KV CKT 1'
12G	06NR	0	'FROM->TO'	G11_048	'JONES STATION - TUCO INTERCHANGE 230KV CKT 1'	351	0.05362	122.0167	'Lamb County REC-Opdyke Sub - SUNDOWN INTERCHANGE 115KV CKT 1'
12G	06NR	0	'FROM->TO'	G11_048	'JONES STATION - TUCO INTERCHANGE 230KV CKT 1'	351	0.05362	122.0264	'SPP-SWPS-T31'
12G	06NR	0	'FROM->TO'	G11_048	'JONES STATION - TUCO INTERCHANGE 230KV CKT 1'	351	0.053	100.65	'HALE CO INTERCHANGE - KRESS INTERCHANGE 115KV CKT 1'
12G	06NR	0	'FROM->TO'	G11_048	'JONES STATION - TUCO INTERCHANGE 230KV CKT 1'	351	0.05312	132.4127	'LUBBOCK EAST INTERCHANGE - TUCO INTERCHANGE 115KV CKT 1'
12G	06NR	0	'FROM->TO'	G11_048	'JONES STATION - TUCO INTERCHANGE 230KV CKT 1'	351	0.053	101.05	'BUSHLAND INTERCHANGE - POTTER COUNTY INTERCHANGE 230KV CKT 1'
12G	06NR	0	'FROM->TO'	G11_048	'JONES STATION - TUCO INTERCHANGE 230KV CKT 1'	351	0.05287	123.1862	'PLANT X STATION - S-RANDLCO 230.00 230KV CKT 1'
12G	06NR	0	'FROM->TO'	G11_048	'JONES STATION - TUCO INTERCHANGE 230KV CKT 1'	351	0.05258	124.2487	'CARLISLE INTERCHANGE - SOUTH PLAINS REC-ERSKINE 115KV CKT 1'
12G	06NR	0	'FROM->TO'	G11_048	'JONES STATION - TUCO INTERCHANGE 230KV CKT 1'	351	0.05258	123.7014	'INDIANA SUB - SOUTH PLAINS REC-ERSKINE 115KV CKT 1'

SEASON	GROUP	SCENARIO	DIRECTION	SOURCE	MONITORED ELEMENT	RATE B (MVA)	TDF	(%MVA) LOADING	CONTINGENCY
12G	06NR	0	'FROM->TO'	G11_048	'JONES STATION - TUCO INTERCHANGE 230KV CKT 1'	351	0.05258	122.2929	'INDIANA SUB - STANTON SUB 115KV CKT 1'
12G	06NR	0	'FROM->TO'	G11_048	'JONES STATION - TUCO INTERCHANGE 230KV CKT 1'	351	0.05258	121.9828	'SPP-SWPS-V15'
12G	06NR	0	'FROM->TO'	G11_048	'JONES STATION - TUCO INTERCHANGE 230KV CKT 1'	351	0.05258	124.0324	'SPP-SWPS-V62'
12G	06NR	0	'FROM->TO'	G11_048	'JONES STATION - TUCO INTERCHANGE 230KV CKT 1'	351	0.05251	122.8072	'TOLK STATION EAST - TOLK STATION TAP 230KV CKT 1'
12G	06NR	0	'FROM->TO'	G11_048	'JONES STATION - TUCO INTERCHANGE 230KV CKT 1'	351	0.0525	123.6709	'POTTER COUNTY INTERCHANGE - S-RANDLCO 230.00 230KV CKT 1'
12G	06NR	0	'FROM->TO'	G11_048	'JONES STATION - TUCO INTERCHANGE 230KV CKT 1'	351	0.052	109.76	'Jones Station Bus#2 - LUBBOCK EAST INTERCHANGE 230KV CKT 1'
12G	06NR	0	'FROM->TO'	G11_048	'JONES STATION - TUCO INTERCHANGE 230KV CKT 1'	351	0.052	105.29	'FLOYD COUNTY INTERCHANGE - G11_025T 115.00 115KV CKT 1'
12G	06NR	0	'FROM->TO'	G11_048	'JONES STATION - TUCO INTERCHANGE 230KV CKT 1'	351	0.052	100.62	'SPP-SWPS-T89'
12G	06NR	0	'FROM->TO'	G11_048	'JONES STATION - TUCO INTERCHANGE 230KV CKT 1'	351	0.052	107.01	'LUBBOCK EAST INTERCHANGE (ENRCO 136162) 230/115/13.2KV TRANSFORMER CKT 1'
12G	06NR	0	'FROM->TO'	G11_048	'JONES STATION - TUCO INTERCHANGE 230KV CKT 1'	351	0.05165	123.0755	'BUSHLAND INTERCHANGE - S-RANDLCO 230.00 230KV CKT 1'
12G	06NR	0	'FROM->TO'	G11_048	'JONES STATION - TUCO INTERCHANGE 230KV CKT 1'	351	0.052	101.19	'LUBBOCK POWER & LIGHT-SOUTHEAST - LUBBOCK SOUTH INTERCHANGE 230KV CKT 1'
12G	06NR	0	'FROM->TO'	G11_048	'JONES STATION - TUCO INTERCHANGE 230KV CKT 1'	351	0.052	101.63	'Jones Station Bus#2 - LUBBOCK POWER & LIGHT-HOLLY PLANT 230KV CKT 1'
12G	06NR	0	'FROM->TO'	G11_048	'JONES STATION - TUCO INTERCHANGE 230KV CKT 1'	351	0.052	106.66	'LUBBOCK SOUTH INTERCHANGE (ABB LLM60043) 230/115/13.2KV TRANSFORMER CKT 1'
12G	06NR	0	'FROM->TO'	G11_048	'JONES STATION - TUCO INTERCHANGE 230KV CKT 1'	351	0.052	101.77	'SPP-SWPS-V33'
12G	06NR	0	'FROM->TO'	G11_048	'JONES STATION - TUCO INTERCHANGE 230KV CKT 1'	351	0.052	101.31	'GRASSLAND INTERCHANGE - LYNN COUNTY INTERCHANGE 115KV CKT 1'
12G	06NR	0	'FROM->TO'	G11_048	'JONES STATION - TUCO INTERCHANGE 230KV CKT 1'	351	0.052	100.78	'LYNN COUNTY INTERCHANGE - SOUTH PLAINS REC-WOODROW INTERCHANGE 115KV CKT 1'
12G	06NR	0	'FROM->TO'	G11_048	'JONES STATION - TUCO INTERCHANGE 230KV CKT 1'	351	0.051	100.86	'LUBBOCK EAST INTERCHANGE - LUBBOCK POWER & LIGHT-WADSWORTH 230KV CKT 1'
12G	06NR	0	'FROM->TO'	G11_048	'JONES STATION - TUCO INTERCHANGE 230KV CKT 1'	351	0.051	101.40	'PLANT X STATION (WH ALM20171) 230/115/13.2KV TRANSFORMER CKT 1'
12G	06NR	0	'FROM->TO'	G11_048	'JONES STATION - TUCO INTERCHANGE 230KV CKT 1'	351	0.051	100.67	'SPP-SWPS-T14'
12G	06NR	0	'FROM->TO'	G11_048	'JONES STATION - TUCO INTERCHANGE 230KV CKT 1'	351	0.051	100.86	'SPP-SWPS-V55'
12G	06NR	0	'FROM->TO'	G11_048	'JONES STATION - TUCO INTERCHANGE 230KV CKT 1'	351	0.051	109.73	'BASE CASE'
12G	06NR	0	'FROM->TO'	G11_048	'JONES STATION - TUCO INTERCHANGE 230KV CKT 1'	351	0.051	102.54	'GEN336821 1-GRAND GULF UNIT'
12G	06NR	0	'FROM->TO'	G11_048	'JONES STATION - TUCO INTERCHANGE 230KV CKT 1'	351	0.051	102.30	'GEN336153 1-WATERFORD UNIT#3'
12G	06NR	0	'FROM->TO'	G11_048	'JONES STATION - TUCO INTERCHANGE 230KV CKT 1'	351	0.051	101.98	'GEN337911 1-ARKANSAS NUCLEAR ONE UNIT #2'
12G	06NR	0	'FROM->TO'	G11_048	'JONES STATION - TUCO INTERCHANGE 230KV CKT 1'	351	0.051	101.97	'GEN335831 1-RIVERBEND UNIT#1'
12G	06NR	0	'FROM->TO'	G11_048	'JONES STATION - TUCO INTERCHANGE 230KV CKT 1'	351	0.051	101.57	'GEN337910 1-ARKANSAS NUCLEAR ONE UNIT #1'
12G	06NR	0	'FROM->TO'	G11_048	'JONES STATION - TUCO INTERCHANGE 230KV CKT 1'	351	0.051	101.44	'GEN338146 1-INDEPENDENCE UNIT #2'
12G	06NR	0	'FROM->TO'	G11_048	'JONES STATION - TUCO INTERCHANGE 230KV CKT 1'	351	0.051	101.43	'GEN338143 1-INDEPENDENCE UNIT #1'
12G	06NR	0	'FROM->TO'	G11_048	'JONES STATION - TUCO INTERCHANGE 230KV CKT 1'	351	0.051	101.41	'GEN337652 1-WHITE BLUFF UNIT #1'
12G	06NR	0	'FROM->TO'	G11_048	'JONES STATION - TUCO INTERCHANGE 230KV CKT 1'	351	0.051	101.29	'GEN337653 1-WHITE BLUFF UNIT #2'
12G	06NR	0	'FROM->TO'	G11_048	'JONES STATION - TUCO INTERCHANGE 230KV CKT 1'	351	0.051	101.13	'GEN501801 1-DOLET HILLS UNIT1'
12G	06NR	0	'FROM->TO'	G11_048	'JONES STATION - TUCO INTERCHANGE 230KV CKT 1'	351	0.051	101.12	'GEN337041 1-GERALD ANDRUS'
12G	06NR	0	'FROM->TO'	G11_048	'JONES STATION - TUCO INTERCHANGE 230KV CKT 1'	351	0.051	101.12	'GEN336251 1-NINEMILE POINT UNIT#4'
12G	06NR	0	'FROM->TO'	G11_048	'JONES STATION - TUCO INTERCHANGE 230KV CKT 1'	351	0.051	101.03	'GEN338388 1-1PLUMPT 23.000'
12G	06NR	0	'FROM->TO'	G11_048	'JONES STATION - TUCO INTERCHANGE 230KV CKT 1'	351	0.051	100.99	'GEN501813 1-RODEMACHER UNIT 3'
12G	06NR	0	'FROM->TO'	G11_048	'JONES STATION - TUCO INTERCHANGE 230KV CKT 1'	351	0.051	100.94	'GEN336831 1-BAXTER WILSON SES'
12G	06NR	0	'FROM->TO'	G11_048	'JONES STATION - TUCO INTERCHANGE 230KV CKT 1'	351	0.051	100.91	'GEN509403 1-PIRKEY GENERATION'
12G	06NR	0	'FROM->TO'	G11_048	'JONES STATION - TUCO INTERCHANGE 230KV CKT 1'	351	0.051	100.84	'GEN501812 1-RODEMACHER UNIT 2'
12G	06NR	0	'FROM->TO'	G11_048	'JONES STATION - TUCO INTERCHANGE 230KV CKT 1'	351	0.051	100.83	'GEN335206 1-NELSON UNIT 6'
12G	06NR	0	'FROM->TO'	G11_048	'JONES STATION - TUCO INTERCHANGE 230KV CKT 1'	351	0.051	100.77	'GEN335204 1-NELSON UNIT 4'
12G	06NR	0	'FROM->TO'	G11_048	'JONES STATION - TUCO INTERCHANGE 230KV CKT 1'	351	0.051	100.75	'GEN334440 1-SABINE UNIT 4'
12G	06NR	0	'FROM->TO'	G11_048	'JONES STATION - TUCO INTERCHANGE 230KV CKT 1'	351	0.051	100.67	'GEN336801 1-BAXTER WILSON UNIT #1'
12G	06NR	0	'FROM->TO'	G11_048	'JONES STATION - TUCO INTERCHANGE 230KV CKT 1'	351	0.051	100.66	'GEN509405 1-WELSH #2'
12G	06NR	0	'FROM->TO'	G11_048	'JONES STATION - TUCO INTERCHANGE 230KV CKT 1'	351	0.051	100.66	'GEN509406 1-WELSH #3'
12G	06NR	0	'FROM->TO'	G11_048	'JONES STATION - TUCO INTERCHANGE 230KV CKT 1'	351	0.051	100.66	'GEN509404 1-WELSH #1'
12G	06NR	0	'FROM->TO'	G11_048	'JONES STATION - TUCO INTERCHANGE 230KV CKT 1'	351	0.051	100.61	'GEN334441 1-SABINE UNIT 5'
12G	06NR	0	'FROM->TO'	G11_048	'JONES STATION - TUCO INTERCHANGE 230KV CKT 1'	351	0.051	100.59	'GEN509394 1-FLINT CREEK'
12G	06NR	0	'FROM->TO'	G11_048	'JONES STATION - TUCO INTERCHANGE 230KV CKT 1'	351	0.051	101.33	'SPP-SWPS-V49'
12G	06NR	0	'FROM->TO'	G11_048	'JONES STATION - TUCO INTERCHANGE 230KV CKT 1'	351	0.051	101.01	'DBL-MATT-TAT'
12G	06NR	0	'FROM->TO'	G11_048	'JONES STATION - TUCO INTERCHANGE 230KV CKT 1'	351	0.051	100.65	'G11_051T 345.00 - TATONGA7 345.00 345KV CKT 1'
12G	06NR	0	'FROM->TO'	G11_048	'JONES STATION - TUCO INTERCHANGE 230KV CKT 1'	351	0.051	100.63	'G11_051T 345.00 - WOODWARD DISTRICT EHV 345KV CKT 1'
12G	06NR	0	'FROM->TO'	G11_048	'JONES STATION - TUCO INTERCHANGE 230KV CKT 1'	351	0.051	100.82	'MOORE COUNTY INTERCHANGE - POTTER COUNTY INTERCHANGE 230KV CKT 1'
12G	06NR	0	'FROM->TO'	G11_048	'JONES STATION - TUCO INTERCHANGE 230KV CKT 1'	351	0.051	103.87	'LUBBOCK POWER & LIGHT-MILWAUKEE (M-E C0681251) 230/69/13.5KV TRANSFORMER CKT 1'
12G	06NR	0	'FROM->TO'	G11_048	'JONES STATION - TUCO INTERCHANGE 230KV CKT 1'	351	0.051	103.86	'LUBBOCK POWER & LIGHT-MILWAUKEE - LUBBOCK POWER & LIGHT-VICKSBURG 69KV CKT 1'
12G	06NR	0	'FROM->TO'	G11_048	'JONES STATION - TUCO INTERCHANGE 230KV CKT 1'	351	0.051	100.79	'Hitchland Interchange - WOODWARD DISTRICT EHV 345KV CKT 2'
12G	06NR	0	'FROM->TO'	G11_048	'JONES STATION - TUCO INTERCHANGE 230KV CKT 1'	351	0.051	101.59	'GRAPEVINE INTERCHANGE - NICHOLS STATION 230KV CKT 1'
12G	06NR	0	'FROM->TO'	G11_048	'JONES STATION - TUCO INTERCHANGE 230KV CKT 1'	351	0.051	102.80	'DBL-WWRD-BVR'
12G	06NR	0	'FROM->TO'	G11_048	'JONES STATION - TUCO INTERCHANGE 230KV CKT 1'	351	0.051	100.68	'G11_012T 230.00 - HITCHLAND INTERCHANGE 230KV CKT 1'
12G	06NR	0	'FROM->TO'	G11_048	'JONES STATION - TUCO INTERCHANGE 230KV CKT 1'	351	0.051	102.92	'DBL-HTCH-BVR'
12G	06NR	0	'FROM->TO'	G11_048	'JONES STATION - TUCO INTERCHANGE 230KV CKT 1'	351	0.051	102.53	'ELK CITY 230KV - SWEETWATER 230KV CKT 1'
12G	06NR	0	'FROM->TO'	G11_048	'JONES STATION - TUCO INTERCHANGE 230KV CKT 1'	351	0.051	102.53	'ELK CITY 230KV (ELKCTY-6) 230/138/13.8KV TRANSFORMER CKT 1'
12G	06NR	0	'FROM->TO'	G11_048	'JONES STATION - TUCO INTERCHANGE 230KV CKT 1'	351	0.051	101.83	'GRAPEVINE INTERCHANGE - STATELINE INTERCHANGE 230KV CKT 1'
12G	06NR	0	'FROM->TO'	G11_048	'JONES STATION - TUCO INTERCHANGE 230KV CKT 1'	351	0.051	101.48	'SPP-SWPS-02A'
12G	06NR	0	'FROM->TO'	G11_048	'JONES STATION - TUCO INTERCHANGE 230KV CKT 1'	351	0.051	101.48	'SPP-SWPS-02'
12G	06NR	0	'FROM->TO'	G11_048	'JONES STATION - TUCO INTERCHANGE 230KV CKT 1'	351	0.051	101.48	'STATELINE INTERCHANGE - STLN-DEMARC6 230KV CKT 1'
12G	06NR	0	'FROM->TO'	G11_048	'JONES STATION - TUCO INTERCHANGE 230KV CKT 1'	351	0.051	101.47	'STLN-DEMARC6 - SWEETWATER 230KV CKT 1'
12G	06NR	0	'FROM->TO'	G11_048	'JONES STATION - TUCO INTERCHANGE 230KV CKT 1'	351	0.051	102.13	'SPP-SWPS-03'
12G	06NR	0	'FROM->TO'	G11_048	'JONES STATION - TUCO INTERCHANGE 230KV CKT 1'	351	0.05054	119.611	'CHAVES COUNTY INTERCHANGE - SAN JUAN MESA TAP 230KV CKT 1'
12G	06NR	0	'FROM->TO'	G11_048	'JONES STATION - TUCO INTERCHANGE 230KV CKT 1'	351	0.05054	123.2333	'OASIS INTERCHANGE - SAN JUAN MESA TAP 230KV CKT 1'
12G	06NR	0	'FROM->TO'	G11_048	'JONES STATION - TUCO INTERCHANGE 230KV CKT 1'	351	0.0505	122.029	'HALE CO INTERCHANGE - KRESS INTERCHANGE 115KV CKT 1'
12G	06NR	0	'FROM->TO'	G11_048	'JONES STATION - TUCO INTERCHANGE 230KV CKT 1'	351	0.05017	122.3167	'BUSHLAND INTERCHANGE - POTTER COUNTY INTERCHANGE 230KV CKT 1'
12G	06NR	0	'FROM->TO'	G11_048	'JONES STATION - TUCO INTERCHANGE 230KV CKT 1'	351	0.050	105.68	'G05-17T 345.00 - Hitchland Interchange 345KV CKT 1'
12G	06NR	0	'FROM->TO'	G11_048	'JONES STATION - TUCO INTERCHANGE 230KV CKT 1'	351	0.050	104.43	'G05-17T 345.00 - POTTER COUNTY INTERCHANGE 345KV CKT 1'
12G	06NR	0	'FROM->TO'	G11_048	'JONES STATION - TUCO INTERCHANGE 230KV CKT 1'	351	0.050	103.21	'POTTER COUNTY INTERCHANGE (WAUK 90343-A) 345/230/13.2KV TRANSFORMER CKT 1'
12G	06NR	0	'FROM->TO'	G11_048	'JONES STATION - TUCO INTERCHANGE 230KV CKT 1'	351	0.04937	132.8179	'Jones Station Bus#2 - LUBBOCK EAST INTERCHANGE 230KV CKT 1'
12G	06NR	0	'FROM->TO'	G11_048	'JONES STATION - TUCO INTERCHANGE 230KV CKT 1'	351	0.0493	122.2039	'CROSBY COUNTY INTERCHANGE - LUBBOCK EAST INTERCHANGE 115KV CKT 1'
12G	06NR	0	'FROM->TO'	G11_048	'JONES STATION - TUCO INTERCHANGE 230KV CKT 1'	351	0.0493	127.1018	'FLOYD COUNTY INTERCHANGE - G11_025T 115.00 115KV CKT 1'
12G	06NR	0	'FROM->TO'	G11_048	'JONES STATION - TUCO INTERCHANGE 230KV CKT 1'	351	0.049	100.73	'CAPROCK REC-KOCH - CAPROCK REC-VEALMOOR 138KV CKT 1'

SEASON	GROUP	SCENARIO	DIRECTION	SOURCE	MONITORED ELEMENT	RATE B (MVA)	TDF	(%MVA) LOADING	CONTINGENCY
12G	06NR	0	'FROM->TO'	G11_048	'JONES STATION - TUCO INTERCHANGE 230KV CKT 1'	351	0.049	100.70	'CAPROCK REC-KOCH - CAPROCK REC-REED 138KV CKT 1'
12G	06NR	0	'FROM->TO'	G11_048	'JONES STATION - TUCO INTERCHANGE 230KV CKT 1'	351	0.049	101.25	'SUNDOWN INTERCHANGE (WH XDS70381) 230/115/13.8KV TRANSFORMER CKT 1'
12G	06NR	0	'FROM->TO'	G11_048	'JONES STATION - TUCO INTERCHANGE 230KV CKT 1'	351	0.04889	119.9359	'LAMB COUNTY INTERCHANGE - TOLK STATION WEST 230KV CKT 1'
12G	06NR	0	'FROM->TO'	G11_048	'JONES STATION - TUCO INTERCHANGE 230KV CKT 1'	351	0.04889	119.9093	'LAMB COUNTY INTERCHANGE (WH ALM20172) 230/115/13.2KV TRANSFORMER CKT 1'
12G	06NR	0	'FROM->TO'	G11_048	'JONES STATION - TUCO INTERCHANGE 230KV CKT 1'	351	0.049	100.93	'HOBBS INTERCHANGE - LEA COUNTY INTERCHANGE 230KV CKT 1'
12G	06NR	0	'FROM->TO'	G11_048	'JONES STATION - TUCO INTERCHANGE 230KV CKT 1'	351	0.04868	121.9726	'SPP-SWPS-T89'
12G	06NR	0	'FROM->TO'	G11_048	'JONES STATION - TUCO INTERCHANGE 230KV CKT 1'	351	0.049	100.97	'Jones Station Bus#2 - LUBBOCK SOUTH INTERCHANGE 230KV CKT 2'
12G	06NR	0	'FROM->TO'	G11_048	'JONES STATION - TUCO INTERCHANGE 230KV CKT 1'	351	0.049	108.19	'ALLEN SUB - LUBBOCK SOUTH INTERCHANGE 115KV CKT 1'
12G	06NR	0	'FROM->TO'	G11_048	'JONES STATION - TUCO INTERCHANGE 230KV CKT 1'	351	0.049	105.63	'ALLEN SUB - SOUTH PLAINS REC-QUAKER 115KV CKT 1'
12G	06NR	0	'FROM->TO'	G11_048	'JONES STATION - TUCO INTERCHANGE 230KV CKT 1'	351	0.049	104.61	'SOUTH PLAINS REC-QUAKER - South Plains REC-Frankford Sub 115KV CKT 1'
12G	06NR	0	'FROM->TO'	G11_048	'JONES STATION - TUCO INTERCHANGE 230KV CKT 1'	351	0.049	103.70	'MURPHY SUB - South Plains REC-Frankford Sub 115KV CKT 1'
12G	06NR	0	'FROM->TO'	G11_048	'JONES STATION - TUCO INTERCHANGE 230KV CKT 1'	351	0.049	102.65	'CARLISLE INTERCHANGE - MURPHY SUB 115KV CKT 1'
12G	06NR	0	'FROM->TO'	G11_048	'JONES STATION - TUCO INTERCHANGE 230KV CKT 1'	351	0.04863	122.5309	'LUBBOCK POWER & LIGHT-SOUTHEAST - LUBBOCK SOUTH INTERCHANGE 230KV CKT 1'
12G	06NR	0	'FROM->TO'	G11_048	'JONES STATION - TUCO INTERCHANGE 230KV CKT 1'	351	0.04857	123.043	'Jones Station Bus#2 - LUBBOCK POWER & LIGHT-HOLLY PLANT 230KV CKT 1'
12G	06NR	0	'FROM->TO'	G11_048	'JONES STATION - TUCO INTERCHANGE 230KV CKT 1'	351	0.04847	129.9134	'LUBBOCK EAST INTERCHANGE (ENRCO 136162) 230/115/13.2KV TRANSFORMER CKT 1'
12G	06NR	0	'FROM->TO'	G11_048	'JONES STATION - TUCO INTERCHANGE 230KV CKT 1'	351	0.04846	129.3761	'LUBBOCK SOUTH INTERCHANGE (ABB LLM60043) 230/115/13.2KV TRANSFORMER CKT 1'
12G	06NR	0	'FROM->TO'	G11_048	'JONES STATION - TUCO INTERCHANGE 230KV CKT 1'	351	0.04844	122.2316	'LUBBOCK EAST INTERCHANGE - LUBBOCK POWER & LIGHT-WADSWORTH 230KV CKT 1'
12G	06NR	0	'FROM->TO'	G11_048	'JONES STATION - TUCO INTERCHANGE 230KV CKT 1'	351	0.04844	122.5966	'PLANT X STATION (WH ALM20171) 230/115/13.2KV TRANSFORMER CKT 1'
12G	06NR	0	'FROM->TO'	G11_048	'JONES STATION - TUCO INTERCHANGE 230KV CKT 1'	351	0.04843	122.4987	'GRASSLAND INTERCHANGE - LYNN COUNTY INTERCHANGE 115KV CKT 1'
12G	06NR	0	'FROM->TO'	G11_048	'JONES STATION - TUCO INTERCHANGE 230KV CKT 1'	351	0.04843	122.1098	'GRASSLAND INTERCHANGE (PENN 0105951) 230/115/13.2KV TRANSFORMER CKT 1'
12G	06NR	0	'FROM->TO'	G11_048	'JONES STATION - TUCO INTERCHANGE 230KV CKT 1'	351	0.04843	121.9713	'LYNN COUNTY INTERCHANGE - SOUTH PLAINS REC-WOODROW INTERCHANGE 115KV CKT 1'
12G	06NR	0	'FROM->TO'	G11_048	'JONES STATION - TUCO INTERCHANGE 230KV CKT 1'	351	0.04843	122.9249	'SPP-SWPS-V33'
12G	06NR	0	'FROM->TO'	G11_048	'JONES STATION - TUCO INTERCHANGE 230KV CKT 1'	351	0.04823	122.0006	'SPP-SWPS-T14'
12G	06NR	0	'FROM->TO'	G11_048	'JONES STATION - TUCO INTERCHANGE 230KV CKT 1'	351	0.04819	122.1743	'SPP-SWPS-V55'
12G	06NR	0	'FROM->TO'	G11_048	'JONES STATION - TUCO INTERCHANGE 230KV CKT 1'	351	0.048	102.39	'GRASSLAND INTERCHANGE - WOLFFORTH INTERCHANGE 230KV CKT 1'
12G	06NR	0	'FROM->TO'	G11_048	'JONES STATION - TUCO INTERCHANGE 230KV CKT 1'	351	0.04816	133.2278	'BASE CASE'
12G	06NR	0	'FROM->TO'	G11_048	'JONES STATION - TUCO INTERCHANGE 230KV CKT 1'	351	0.04816	122.2214	'GEN334440 1-SABINE UNIT 4'
12G	06NR	0	'FROM->TO'	G11_048	'JONES STATION - TUCO INTERCHANGE 230KV CKT 1'	351	0.04816	122.0669	'GEN334441 1-SABINE UNIT 5'
12G	06NR	0	'FROM->TO'	G11_048	'JONES STATION - TUCO INTERCHANGE 230KV CKT 1'	351	0.04816	122.2481	'GEN335204 1-NELSON UNIT 4'
12G	06NR	0	'FROM->TO'	G11_048	'JONES STATION - TUCO INTERCHANGE 230KV CKT 1'	351	0.04816	122.3133	'GEN335206 1-NELSON UNIT 6'
12G	06NR	0	'FROM->TO'	G11_048	'JONES STATION - TUCO INTERCHANGE 230KV CKT 1'	351	0.04816	123.5382	'GEN335831 1-RIVERBEND UNIT#1'
12G	06NR	0	'FROM->TO'	G11_048	'JONES STATION - TUCO INTERCHANGE 230KV CKT 1'	351	0.04816	123.8992	'GEN336153 1-WATERFORD UNIT#3'
12G	06NR	0	'FROM->TO'	G11_048	'JONES STATION - TUCO INTERCHANGE 230KV CKT 1'	351	0.04816	122.6279	'GEN336251 1-NINEMILE POINT UNIT#4'
12G	06NR	0	'FROM->TO'	G11_048	'JONES STATION - TUCO INTERCHANGE 230KV CKT 1'	351	0.04816	122.1372	'GEN336801 1-BAXTER WILSON UNIT #1'
12G	06NR	0	'FROM->TO'	G11_048	'JONES STATION - TUCO INTERCHANGE 230KV CKT 1'	351	0.04816	124.1731	'GEN336821 1-GRAND GULF UNIT'
12G	06NR	0	'FROM->TO'	G11_048	'JONES STATION - TUCO INTERCHANGE 230KV CKT 1'	351	0.04816	120.9344	'TUCO INTERCHANGE 230/13.0KV TRANSFORMER CKT 1'
12G	06NR	0	'FROM->TO'	G11_048	'JONES STATION - TUCO INTERCHANGE 230KV CKT 1'	351	0.04815	122.6654	'SPP-SWPS-V49'
12G	06NR	0	'FROM->TO'	G11_048	'JONES STATION - TUCO INTERCHANGE 230KV CKT 1'	351	0.04812	122.0019	'G11_051T 345.00 - TATONGA7 345.00 345KV CKT 1'
12G	06NR	0	'FROM->TO'	G11_048	'JONES STATION - TUCO INTERCHANGE 230KV CKT 1'	351	0.04812	121.9694	'G11_051T 345.00 - WOODWARD DISTRICT EHV 345KV CKT 1'
12G	06NR	0	'FROM->TO'	G11_048	'JONES STATION - TUCO INTERCHANGE 230KV CKT 1'	351	0.04809	120.2141	'LAWTON EASTSIDE - SUNNYSIDE 345KV CKT 1'
12G	06NR	0	'FROM->TO'	G11_048	'JONES STATION - TUCO INTERCHANGE 230KV CKT 1'	351	0.04803	122.1653	'MOORE COUNTY INTERCHANGE - POTTER COUNTY INTERCHANGE 230KV CKT 1'
12G	06NR	0	'FROM->TO'	G11_048	'JONES STATION - TUCO INTERCHANGE 230KV CKT 1'	351	0.048	122.1544	'Hitchland Interchange - WOODWARD DISTRICT EHV 345KV CKT 2'
12G	06NR	0	'FROM->TO'	G11_048	'JONES STATION - TUCO INTERCHANGE 230KV CKT 1'	351	0.04787	118.7505	'CARLISLE INTERCHANGE - LUBBOCK POWER & LIGHT-MILWAUKEE 230KV CKT 1'
12G	06NR	0	'FROM->TO'	G11_048	'JONES STATION - TUCO INTERCHANGE 230KV CKT 1'	351	0.04787	125.8271	'LUBBOCK POWER & LIGHT-MILWAUKEE - LUBBOCK POWER & LIGHT-VICKSBURG 69KV CKT 1'
12G	06NR	0	'FROM->TO'	G11_048	'JONES STATION - TUCO INTERCHANGE 230KV CKT 1'	351	0.04787	125.8313	'LUBBOCK POWER & LIGHT-MILWAUKEE (M-E C0681251) 230/69/13.5KV TRANSFORMER CKT 1'
12G	06NR	0	'FROM->TO'	G11_048	'JONES STATION - TUCO INTERCHANGE 230KV CKT 1'	351	0.04782	119.2567	'BORDER 7345.00 - WOODWARD DISTRICT EHV 345KV CKT 1'
12G	06NR	0	'FROM->TO'	G11_048	'JONES STATION - TUCO INTERCHANGE 230KV CKT 1'	351	0.04782	122.927	'GRAPEVINE INTERCHANGE - NICHOLS STATION 230KV CKT 1'
12G	06NR	0	'FROM->TO'	G11_048	'JONES STATION - TUCO INTERCHANGE 230KV CKT 1'	351	0.04772	122.0229	'G11_012T 230.00 - HITCHLAND INTERCHANGE 230KV CKT 1'
12G	06NR	0	'FROM->TO'	G11_048	'JONES STATION - TUCO INTERCHANGE 230KV CKT 1'	351	0.04765	119.9124	'TUCO INTERCHANGE (UPDATE DATA) 345/230/13.2KV TRANSFORMER CKT 2'
12G	06NR	0	'FROM->TO'	G11_048	'JONES STATION - TUCO INTERCHANGE 230KV CKT 1'	351	0.04758	120.1611	'CAPROCK REC-1956 - CAPROCK REC-MCDONALD 138KV CKT 1'
12G	06NR	0	'FROM->TO'	G11_048	'JONES STATION - TUCO INTERCHANGE 230KV CKT 1'	351	0.04758	123.8698	'ELK CITY 230KV - SWEETWATER 230KV CKT 1'
12G	06NR	0	'FROM->TO'	G11_048	'JONES STATION - TUCO INTERCHANGE 230KV CKT 1'	351	0.04758	123.8696	'ELK CITY 230KV (ELKCTY-6) 230/138/13.8KV TRANSFORMER CKT 1'
12G	06NR	0	'FROM->TO'	G11_048	'JONES STATION - TUCO INTERCHANGE 230KV CKT 1'	351	0.04758	123.1555	'GRAPEVINE INTERCHANGE - STATELINE INTERCHANGE 230KV CKT 1'
12G	06NR	0	'FROM->TO'	G11_048	'JONES STATION - TUCO INTERCHANGE 230KV CKT 1'	351	0.04758	122.8067	'SPP-SWPS-02'
12G	06NR	0	'FROM->TO'	G11_048	'JONES STATION - TUCO INTERCHANGE 230KV CKT 1'	351	0.04758	122.8219	'SPP-SWPS-02A'
12G	06NR	0	'FROM->TO'	G11_048	'JONES STATION - TUCO INTERCHANGE 230KV CKT 1'	351	0.04758	122.8067	'STATELINE INTERCHANGE - STLN-DEMARC6 230KV CKT 1'
12G	06NR	0	'FROM->TO'	G11_048	'JONES STATION - TUCO INTERCHANGE 230KV CKT 1'	351	0.04758	122.8084	'STLN-DEMARC6 - SWEETWATER 230KV CKT 1'
12G	06NR	0	'FROM->TO'	G11_048	'JONES STATION - TUCO INTERCHANGE 230KV CKT 1'	351	0.04757	123.457	'SPP-SWPS-03'
12G	06NR	0	'FROM->TO'	G11_048	'JONES STATION - TUCO INTERCHANGE 230KV CKT 1'	351	0.047	101.33	'JONES STATION - LUBBOCK SOUTH INTERCHANGE 230KV CKT 1'
12G	06NR	0	'FROM->TO'	G11_048	'JONES STATION - TUCO INTERCHANGE 230KV CKT 1'	351	0.04737	119.5555	'TUCO INTERCHANGE (GE M1022338) 345/230/13.2KV TRANSFORMER CKT 1'
12G	06NR	0	'FROM->TO'	G11_048	'JONES STATION - TUCO INTERCHANGE 230KV CKT 1'	351	0.0469	126.7874	'G05-17T 345.00 - Hitchland Interchange 345KV CKT 1'
12G	06NR	0	'FROM->TO'	G11_048	'JONES STATION - TUCO INTERCHANGE 230KV CKT 1'	351	0.0469	125.5692	'G05-17T 345.00 - POTTER COUNTY INTERCHANGE 345KV CKT 1'
12G	06NR	0	'FROM->TO'	G11_048	'JONES STATION - TUCO INTERCHANGE 230KV CKT 1'	351	0.0469	124.4745	'POTTER COUNTY INTERCHANGE (WAUK 90343-A) 345/230/13.2KV TRANSFORMER CKT 1'
12G	06NR	0	'FROM->TO'	G11_048	'JONES STATION - TUCO INTERCHANGE 230KV CKT 1'	351	0.047	106.24	'WOLFFORTH INTERCHANGE (WH 7001668) 230/115/13.2KV TRANSFORMER CKT 1'
12G	06NR	0	'FROM->TO'	G11_048	'JONES STATION - TUCO INTERCHANGE 230KV CKT 1'	351	0.046	104.12	'BORDEN COUNTY INTERCHANGE (ABB LL58862) 230/138/13.2KV TRANSFORMER CKT 1'
12G	06NR	0	'FROM->TO'	G11_048	'JONES STATION - TUCO INTERCHANGE 230KV CKT 1'	351	0.046	104.12	'BORDEN COUNTY INTERCHANGE - G11_058T 230.00 230KV CKT 1'
12G	06NR	0	'FROM->TO'	G11_048	'JONES STATION - TUCO INTERCHANGE 230KV CKT 1'	351	0.04602	122.2198	'CAPROCK REC-GRADY - CAPROCK REC-REED 138KV CKT 1'
12G	06NR	0	'FROM->TO'	G11_048	'JONES STATION - TUCO INTERCHANGE 230KV CKT 1'	351	0.04602	122.3371	'CAPROCK REC-KOCH - CAPROCK REC-REED 138KV CKT 1'
12G	06NR	0	'FROM->TO'	G11_048	'JONES STATION - TUCO INTERCHANGE 230KV CKT 1'	351	0.04602	122.3743	'CAPROCK REC-KOCH - CAPROCK REC-VEALMOOR 138KV CKT 1'
12G	06NR	0	'FROM->TO'	G11_048	'JONES STATION - TUCO INTERCHANGE 230KV CKT 1'	351	0.04595	122.7229	'SUNDOWN INTERCHANGE (WH XDS70381) 230/115/13.8KV TRANSFORMER CKT 1'
12G	06NR	0	'FROM->TO'	G11_048	'JONES STATION - TUCO INTERCHANGE 230KV CKT 1'	351	0.04557	122.9279	'Jones Station Bus#2 - LUBBOCK SOUTH INTERCHANGE 230KV CKT 2'
12G	06NR	0	'FROM->TO'	G11_048	'JONES STATION - TUCO INTERCHANGE 230KV CKT 1'	351	0.04555	122.3839	'HOBBS INTERCHANGE - LEA COUNTY INTERCHANGE 230KV CKT 1'
12G	06NR	0	'FROM->TO'	G11_048	'JONES STATION - TUCO INTERCHANGE 230KV CKT 1'	351	0.04552	110.9847	'G05-15T 345.00 - OKLAUNION 345KV CKT 1'
12G	06NR	0	'FROM->TO'	G11_048	'JONES STATION - TUCO INTERCHANGE 230KV CKT 1'	351	0.04552	113.0845	'G05-15T 345.00 - TUCO INTERCHANGE 345KV CKT 1'
12G	06NR	0	'FROM->TO'	G11_048	'JONES STATION - TUCO INTERCHANGE 230KV CKT 1'	351	0.04548	130.5194	'ALLEN SUB - LUBBOCK SOUTH INTERCHANGE 115KV CKT 1'
12G	06NR	0	'FROM->TO'	G11_048	'JONES STATION - TUCO INTERCHANGE 230KV CKT 1'	351	0.04548	127.9671	'ALLEN SUB - SOUTH PLAINS REC-QUAKER 115KV CKT 1'
12G	06NR	0	'FROM->TO'	G11_048	'JONES STATION - TUCO INTERCHANGE 230KV CKT 1'	351	0.04548	124.9653	'CARLISLE INTERCHANGE - MURPHY SUB 115KV CKT 1'
12G	06NR	0	'FROM->TO'	G11_048	'JONES STATION - TUCO INTERCHANGE 230KV CKT 1'	351	0.04548	126.0111	'MURPHY SUB - South Plains REC-Frankford Sub 115KV CKT 1'

SEASON	GROUP	SCENARIO	DIRECTION	SOURCE	MONITORED ELEMENT	RATE B (MVA)	TDF	(%MVA) LOADING	CONTINGENCY
12G	06NR	0	'FROM->TO'	G11_048	'JONES STATION - TUCO INTERCHANGE 230KV CKT 1'	351	0.04548	126.9232	'SOUTH PLAINS REC-QUAKER - South Plains REC-Frankford Sub 115KV CKT 1'
12G	06NR	0	'FROM->TO'	G11_048	'JONES STATION - TUCO INTERCHANGE 230KV CKT 1'	351	0.04504	124.2963	'GRASSLAND INTERCHANGE - WOLFFORTH INTERCHANGE 230KV CKT 1'
12G	06NR	0	'FROM->TO'	G11_048	'JONES STATION - TUCO INTERCHANGE 230KV CKT 1'	351	0.04429	123.2713	'JONES STATION - LUBBOCK SOUTH INTERCHANGE 230KV CKT 1'
12G	06NR	0	'FROM->TO'	G11_048	'JONES STATION - TUCO INTERCHANGE 230KV CKT 1'	351	0.04408	114.6073	'BORDER 7345.00 - TUCO INTERCHANGE 345KV CKT 1'
12G	06NR	0	'FROM->TO'	G11_048	'JONES STATION - TUCO INTERCHANGE 230KV CKT 1'	351	0.04402	116.3455	'JONES STATION - Jones Station Bus#2 230KV CKT 1'
12G	06NR	0	'FROM->TO'	G11_048	'JONES STATION - TUCO INTERCHANGE 230KV CKT 1'	351	0.0436	128.4789	'WOLFFORTH INTERCHANGE (WH 7001668) 230/115/13.2KV TRANSFORMER CKT 1'
12G	06NR	0	'FROM->TO'	G11_048	'JONES STATION - TUCO INTERCHANGE 230KV CKT 1'	351	0.04311	126.1475	'BORDEN COUNTY INTERCHANGE - G11_058T 230.00 230KV CKT 1'
12G	06NR	0	'FROM->TO'	G11_048	'JONES STATION - TUCO INTERCHANGE 230KV CKT 1'	351	0.04311	126.1518	'BORDEN COUNTY INTERCHANGE (ABB LL58862) 230/138/13.2KV TRANSFORMER CKT 1'
12G	06NR	0	'FROM->TO'	G11_048	'JONES STATION - TUCO INTERCHANGE 230KV CKT 1'	351	0.04311	118.6959	'CAPROCK REC-MCDONALD - CAPROCK REC-PHILLIPS 138KV CKT 1'
12G	06NR	0	'FROM->TO'	G11_048	'JONES STATION - TUCO INTERCHANGE 230KV CKT 1'	351	0.04311	118.0698	'CAPROCK REC-PHILLIPS - CAPROCK REC-TATE 138KV CKT 1'
12G	06NR	0	'FROM->TO'	G11_048	'JONES STATION - TUCO INTERCHANGE 230KV CKT 1'	351	0.04311	117.787	'HOBBS INTERCHANGE - MIDLAND COUNTY INTERCHANGE 230KV CKT 1'
12G	06NR	0	'FROM->TO'	G11_048	'JONES STATION - TUCO INTERCHANGE 230KV CKT 1'	351	0.04311	117.7914	'MIDLAND COUNTY INTERCHANGE (ABB LLL58861) 230/138/13.2KV TRANSFORMER CKT 1'
12G	06NR	0	'FROM->TO'	G11_048	'JONES STATION - TUCO INTERCHANGE 230KV CKT 1'	351	0.04301	118.9748	'AMARILLO SOUTH INTERCHANGE - G07-48T 230.00 230KV CKT 1'
12G	06NR	0	'FROM->TO'	G11_048	'JONES STATION - TUCO INTERCHANGE 230KV CKT 1'	351	0.04134	113.9897	'GRASSLAND INTERCHANGE - Jones Station Bus#2 230KV CKT 1'
12G	06NR	0	'FROM->TO'	G11_048	'JONES STATION - TUCO INTERCHANGE 230KV CKT 1'	351	0.04097	119.6973	'SWISHER COUNTY INTERCHANGE - TUCO INTERCHANGE 230KV CKT 1'
12G	06G11_048	2	'FROM->TO'	G11_048	'AMOCO WASSON SWITCHING STATION - YOAKUM COUNTY INTERCHANGE 230KV CKT 1'	351	0.66481	106.2536	'MUSTANG STATION - YOAKUM COUNTY INTERCHANGE 230KV CKT 1'
12G	06G11_048	2	'FROM->TO'	G11_048	'MUSTANG STATION - YOAKUM COUNTY INTERCHANGE 230KV CKT 1'	351	0.66249	113.7393	'AMOCO WASSON SWITCHING STATION - MUSTANG STATION 230KV CKT 1'
12G	06G11_048	2	'FROM->TO'	G11_048	'MUSTANG STATION - YOAKUM COUNTY INTERCHANGE 230KV CKT 1'	351	0.66249	106.3226	'AMOCO WASSON SWITCHING STATION - YOAKUM COUNTY INTERCHANGE 230KV CKT 1'
13WP	00NR	2	'FROM->TO'	G11_048	'MUSTANG STATION - YOAKUM COUNTY INTERCHANGE 230KV CKT 1'	361	0.554	100.65	'AMOCO WASSON SWITCHING STATION - MUSTANG STATION 230KV CKT 1'
12WP	00NR	2	'FROM->TO'	G11_048	'MUSTANG STATION - YOAKUM COUNTY INTERCHANGE 230KV CKT 1'	361	0.553	101.61	'AMOCO WASSON SWITCHING STATION - MUSTANG STATION 230KV CKT 1'
12G	06G11_048	2	'FROM->TO'	G11_048	'JONES STATION - TUCO INTERCHANGE 230KV CKT 1'	502	0.23704	102.8645	'TOLK STATION EAST - TUCO INTERCHANGE 230KV CKT 1'
12WP	00NR	2	'FROM->TO'	G11_048	'TUCO INTERCHANGE (GE M1022338) 345/230/13.2KV TRANSFORMER CKT 1'	560	0.126	101.74	'TUCO INTERCHANGE (UPDATE DATA) 345/230/13.2KV TRANSFORMER CKT 2'
12WP	00NR	2	'FROM->TO'	G11_048	'TUCO INTERCHANGE (GE M1022338) 345/230/13.2KV TRANSFORMER CKT 1'	560	0.126	100.88	'TUCO INTERCHANGE (UPDATE DATA) 345/230/13.2KV TRANSFORMER CKT 2'
12G	06NR	2	'FROM->TO'	G11_048	'TUCO INTERCHANGE (GE M1022338) 345/230/13.2KV TRANSFORMER CKT 1'	560	0.108	104.30	'TUCO INTERCHANGE (UPDATE DATA) 345/230/13.2KV TRANSFORMER CKT 2'
12G	06NR	2	'FROM->TO'	G11_048	'TUCO INTERCHANGE (GE M1022338) 345/230/13.2KV TRANSFORMER CKT 1'	560	0.108	103.20	'TUCO INTERCHANGE (UPDATE DATA) 345/230/13.2KV TRANSFORMER CKT 2'
12G	06NR	2	'FROM->TO'	G11_048	'TUCO INTERCHANGE (UPDATE DATA) 345/230/13.2KV TRANSFORMER CKT 2'	560	0.104	100.66	'TUCO INTERCHANGE (GE M1022338) 345/230/13.2KV TRANSFORMER CKT 1'
12G	06NR	2	'FROM->TO'	G11_048	'TUCO INTERCHANGE (UPDATE DATA) 345/230/13.2KV TRANSFORMER CKT 2'	560	0.104	100.00	'TUCO INTERCHANGE (GE M1022338) 345/230/13.2KV TRANSFORMER CKT 1'
12SP	00NR	2	'FROM->TO'	G11_048	'WOLFFORTH INTERCHANGE - YUMA INTERCHANGE 115KV CKT 1'	160	0.058	100.65	'ALLEN SUB - LUBBOCK SOUTH INTERCHANGE 115KV CKT 1'
17SP	00NR	2	'FROM->TO'	G11_048	'WOLFFORTH INTERCHANGE - YUMA INTERCHANGE 115KV CKT 1'	160	0.057	100.85	'ALLEN SUB - LUBBOCK SOUTH INTERCHANGE 115KV CKT 1'
13SP	00NR	2	'FROM->TO'	G11_048	'WOLFFORTH INTERCHANGE - YUMA INTERCHANGE 115KV CKT 1'	160	0.057	104.16	'ALLEN SUB - LUBBOCK SOUTH INTERCHANGE 115KV CKT 1'
13WP	00NR	3	'FROM->TO'	G11_048	'MUSTANG STATION - YOAKUM COUNTY INTERCHANGE 230KV CKT 1'	361	0.55369	100.8783	'AMOCO WASSON SWITCHING STATION - MUSTANG STATION 230KV CKT 1'
12WP	00NR	3	'FROM->TO'	G11_048	'MUSTANG STATION - YOAKUM COUNTY INTERCHANGE 230KV CKT 1'	361	0.55255	101.824	'AMOCO WASSON SWITCHING STATION - MUSTANG STATION 230KV CKT 1'
12G	06NR	3	'FROM->TO'	G11_048	'AMOCO WASSON SWITCHING STATION - YOAKUM COUNTY INTERCHANGE 230KV CKT 1'	351	0.54832	106.2281	'MUSTANG STATION - YOAKUM COUNTY INTERCHANGE 230KV CKT 1'
12G	06NR	3	'FROM->TO'	G11_048	'MUSTANG STATION - YOAKUM COUNTY INTERCHANGE 230KV CKT 1'	351	0.54641	113.7083	'AMOCO WASSON SWITCHING STATION - MUSTANG STATION 230KV CKT 1'
12G	06NR	3	'FROM->TO'	G11_048	'MUSTANG STATION - YOAKUM COUNTY INTERCHANGE 230KV CKT 1'	351	0.54641	106.2968	'AMOCO WASSON SWITCHING STATION - YOAKUM COUNTY INTERCHANGE 230KV CKT 1'
12G	06NR	3	'TO->FROM'	G11_048	'BUSHLAND INTERCHANGE - S-RANDLCO 230.00 230KV CKT 1'	350	0.0849	120.4519	'POTTER COUNTY INTERCHANGE - S-RANDLCO 230.00 230KV CKT 1'
12G	06NR	3	'FROM->TO'	G11_048	'WOLFFORTH INTERCHANGE - YUMA INTERCHANGE 115KV CKT 1'	160	0.08487	111.0467	'LUBBOCK SOUTH INTERCHANGE - WOLFFORTH INTERCHANGE 230KV CKT 1'
12G	06NR	3	'TO->FROM'	G11_048	'DEAF SMITH COUNTY INTERCHANGE - PLANT X STATION 230KV CKT 1'	351	0.07488	100.5013	'PLANT X STATION - S-RANDLCO 230.00 230KV CKT 1'
12G	06NR	3	'FROM->TO'	G11_048	'JONES STATION - TUCO INTERCHANGE 230KV CKT 1'	502	0.0723	112.3383	'TOLK STATION WEST - YOAKUM COUNTY INTERCHANGE 230KV CKT 1'
12G	06NR	3	'FROM->TO'	G11_048	'WOLFFORTH INTERCHANGE - YUMA INTERCHANGE 115KV CKT 1'	160	0.07134	108.3718	'TOLK STATION WEST - YOAKUM COUNTY INTERCHANGE 230KV CKT 1'
12G	06NR	3	'TO->FROM'	G11_048	'CARLISLE INTERCHANGE - LP-DOUD_TP 3115.00 115KV CKT 1'	154	0.06225	121.7082	'JONES STATION - TUCO INTERCHANGE 230KV CKT 1'
12G	06NR	3	'TO->FROM'	G11_048	'LP-DOUD_TP 3115.00 - YUMA INTERCHANGE 115KV CKT 1'	175	0.06225	118.2377	'JONES STATION - TUCO INTERCHANGE 230KV CKT 1'
12G	06NR	3	'FROM->TO'	G11_048	'WOLFFORTH INTERCHANGE - YUMA INTERCHANGE 115KV CKT 1'	160	0.06225	142.8828	'JONES STATION - TUCO INTERCHANGE 230KV CKT 1'
12G	06NR	3	'FROM->TO'	G11_048	'JONES STATION - TUCO INTERCHANGE 230KV CKT 1'	502	0.0607	115.2691	'CARLISLE INTERCHANGE - TUCO INTERCHANGE 230KV CKT 1'
12G	06NR	3	'FROM->TO'	G11_048	'JONES STATION - TUCO INTERCHANGE 230KV CKT 1'	502	0.06061	115.1394	'CARLISLE INTERCHANGE - LP-DOUD_TP 3115.00 115KV CKT 1'
12G	06NR	3	'FROM->TO'	G11_048	'JONES STATION - TUCO INTERCHANGE 230KV CKT 1'	502	0.06061	115.9443	'LP-DOUD_TP 3115.00 - YUMA INTERCHANGE 115KV CKT 1'
12G	06NR	3	'FROM->TO'	G11_048	'JONES STATION - TUCO INTERCHANGE 230KV CKT 1'	502	0.06061	116.9551	'WOLFFORTH INTERCHANGE - YUMA INTERCHANGE 115KV CKT 1'
12G	06NR	3	'FROM->TO'	G11_048	'WOLFFORTH INTERCHANGE - YUMA INTERCHANGE 115KV CKT 1'	160	0.06051	106.9034	'LYNTEGAR REC-CLAUENE - TERRY COUNTY INTERCHANGE 115KV CKT 1'
12G	06NR	3	'FROM->TO'	G11_048	'WOLFFORTH INTERCHANGE - YUMA INTERCHANGE 115KV CKT 1'	160	0.06003	106.3829	'HOCKLEY COUNTY INTERCHANGE - Lamb County REC-Opdyke Sub 115KV CKT 1'
12G	06NR	3	'FROM->TO'	G11_048	'WOLFFORTH INTERCHANGE - YUMA INTERCHANGE 115KV CKT 1'	160	0.06003	106.6585	'Lamb County REC-Opdyke Sub - SUNDOWN INTERCHANGE 115KV CKT 1'
12G	06NR	3	'TO->FROM'	G11_048	'CARLISLE INTERCHANGE - LP-DOUD_TP 3115.00 115KV CKT 1'	154	0.05974	111.5076	'TOLK STATION EAST - TUCO INTERCHANGE 230KV CKT 1'
12G	06NR	3	'TO->FROM'	G11_048	'LP-DOUD_TP 3115.00 - YUMA INTERCHANGE 115KV CKT 1'	175	0.05974	108.7092	'TOLK STATION EAST - TUCO INTERCHANGE 230KV CKT 1'
12G	06NR	3	'FROM->TO'	G11_048	'WOLFFORTH INTERCHANGE - YUMA INTERCHANGE 115KV CKT 1'	160	0.05974	130.9621	'TOLK STATION EAST - TUCO INTERCHANGE 230KV CKT 1'
12G	06NR	3	'FROM->TO'	G11_048	'WOLFFORTH INTERCHANGE - YUMA INTERCHANGE 115KV CKT 1'	160	0.05971	101.3763	'CHAVESCO 345.00 - EDDY COUNTY INTERCHANGE 345KV CKT 1'
12G	06NR	3	'FROM->TO'	G11_048	'WOLFFORTH INTERCHANGE - YUMA INTERCHANGE 115KV CKT 1'	160	0.05971	108.608	'CHAVESCO 345.00 - TOLK STATION 345KV CKT 1'
12G	06NR	3	'FROM->TO'	G11_048	'WOLFFORTH INTERCHANGE - YUMA INTERCHANGE 115KV CKT 1'	160	0.05971	101.3804	'EDDY COUNTY INTERCHANGE (ABB AEM30711) 345/230/13.2KV TRANSFORMER CKT 1'
12G	06NR	3	'FROM->TO'	G11_048	'WOLFFORTH INTERCHANGE - YUMA INTERCHANGE 115KV CKT 1'	160	0.05971	108.5617	'TOLK STATION (ABBXNL844501) 345/230/13.2KV TRANSFORMER CKT 1'
12G	06NR	3	'FROM->TO'	G11_048	'WOLFFORTH INTERCHANGE - YUMA INTERCHANGE 115KV CKT 1'	160	0.05939	112.9238	'GRASSLAND INTERCHANGE - Jones Station Bus#2 230KV CKT 1'
12G	06NR	3	'FROM->TO'	G11_048	'WOLFFORTH INTERCHANGE - YUMA INTERCHANGE 115KV CKT 1'	160	0.05896	106.3405	'TOLK STATION EAST - TOLK STATION TAP 230KV CKT 1'
12G	06NR	3	'FROM->TO'	G11_048	'WOLFFORTH INTERCHANGE - YUMA INTERCHANGE 115KV CKT 1'	160	0.05882	107.7677	'DEAF SMITH COUNTY INTERCHANGE - S-RANDLCO 230.00 230KV CKT 1'
12G	06NR	3	'FROM->TO'	G11_048	'WOLFFORTH INTERCHANGE - YUMA INTERCHANGE 115KV CKT 1'	160	0.05872	110.783	'DEAF SMITH COUNTY INTERCHANGE - PLANT X STATION 230KV CKT 1'
12G	06NR	3	'FROM->TO'	G11_048	'JONES STATION - TUCO INTERCHANGE 230KV CKT 1'	502	0.05841	114.9909	'CARLISLE INTERCHANGE (WH XHS70711) 230/115/13.2KV TRANSFORMER CKT 1'
12G	06NR	3	'FROM->TO'	G11_048	'WOLFFORTH INTERCHANGE - YUMA INTERCHANGE 115KV CKT 1'	160	0.05835	101.6306	'SUNDOWN INTERCHANGE (WH XDS70381) 230/115/13.8KV TRANSFORMER CKT 1'
12G	06NR	3	'FROM->TO'	G11_048	'WOLFFORTH INTERCHANGE - YUMA INTERCHANGE 115KV CKT 1'	160	0.05832	108.9393	'PLANT X STATION - S-RANDLCO 230.00 230KV CKT 1'
12G	06NR	3	'FROM->TO'	G11_048	'WOLFFORTH INTERCHANGE - YUMA INTERCHANGE 115KV CKT 1'	160	0.05815	109.2646	'POTTER COUNTY INTERCHANGE - S-RANDLCO 230.00 230KV CKT 1'
12SP	00NR	3	'FROM->TO'	G11_048	'WOLFFORTH INTERCHANGE - YUMA INTERCHANGE 115KV CKT 1'	160	0.0581	100.3153	'ALLEN SUB - LUBBOCK SOUTH INTERCHANGE 115KV CKT 1'
12G	06NR	3	'FROM->TO'	G11_048	'WOLFFORTH INTERCHANGE - YUMA INTERCHANGE 115KV CKT 1'	160	0.05789	107.3296	'OASIS INTERCHANGE - SAN JUAN MESA TAP 230KV CKT 1'
12G	06NR	3	'FROM->TO'	G11_048	'WOLFFORTH INTERCHANGE - YUMA INTERCHANGE 115KV CKT 1'	160	0.05787	108.1013	'BUSHLAND INTERCHANGE - S-RANDLCO 230.00 230KV CKT 1'
12G	06NR	3	'FROM->TO'	G11_048	'WOLFFORTH INTERCHANGE - YUMA INTERCHANGE 115KV CKT 1'	160	0.05755	106.1847	'HOBBS INTERCHANGE - MIDLAND COUNTY INTERCHANGE 230KV CKT 1'
12G	06NR	3	'FROM->TO'	G11_048	'WOLFFORTH INTERCHANGE - YUMA INTERCHANGE 115KV CKT 1'	160	0.05755	106.1845	'MIDLAND COUNTY INTERCHANGE (ABB LLL58861) 230/138/13.2KV TRANSFORMER CKT 1'
17SP	00NR	3	'FROM->TO'	G11_048	'WOLFFORTH INTERCHANGE - YUMA INTERCHANGE 115KV CKT 1'	160	0.05752	100.4108	'ALLEN SUB - LUBBOCK SOUTH INTERCHANGE 115KV CKT 1'
12G	06NR	3	'FROM->TO'	G11_048	'WOLFFORTH INTERCHANGE - YUMA INTERCHANGE 115KV CKT 1'	160	0.05736	109.4765	'LUBBOCK EAST INTERCHANGE - TUCO INTERCHANGE 115KV CKT 1'
13SP	00NR	3	'FROM->TO'	G11_048	'WOLFFORTH INTERCHANGE - YUMA INTERCHANGE 115KV CKT 1'	160	0.05735	103.8055	'ALLEN SUB - LUBBOCK SOUTH INTERCHANGE 115KV CKT 1'
12G	06NR	3	'FROM->TO'	G11_048	'WOLFFORTH INTERCHANGE - YUMA INTERCHANGE 115KV CKT 1'	160	0.05733	106.5944	'BUSHLAND INTERCHANGE - POTTER COUNTY INTERCHANGE 230KV CKT 1'
12G	06NR	3	'FROM->TO'	G11_048	'WOLFFORTH INTERCHANGE - YUMA INTERCHANGE 115KV CKT 1'	160	0.05701	106.067	'HALE CO INTERCHANGE - PLANT X STATION 115KV CKT 1'
12G	06NR	3	'FROM->TO'	G11_048	'WOLFFORTH INTERCHANGE - YUMA INTERCHANGE 115KV CKT 1'	160	0.05689	110.0026	'Jones Station Bus#2 - LUBBOCK EAST INTERCHANGE 230KV CKT 1'
12G	06NR	3	'FROM->TO'	G11_048	'WOLFFORTH INTERCHANGE - YUMA INTERCHANGE 115KV CKT 1'	160	0.05684	108.5926	'PLANT X STATION (WH ALM20171) 230/115/13.2KV TRANSFORMER CKT 1'
12G	06NR	3	'FROM->TO'	G11_048	'WOLFFORTH INTERCHANGE - YUMA INTERCHANGE 115KV CKT 1'	160	0.05683	106.7146	'GRASSLAND INTERCHANGE - LYNN COUNTY INTERCHANGE 115KV CKT 1'

SEASON	GROUP	SCENARIO	DIRECTION	SOURCE	MONITORED ELEMENT	RATE B (MVA)	TDF	(%MVA) LOADING	CONTINGENCY
12G	06NR	3	'FROM->TO'	G11_048	'WOLFFORTH INTERCHANGE - YUMA INTERCHANGE 115KV CKT 1'	160	0.05672	108.3637	'LUBBOCK EAST INTERCHANGE (ENRCO 136162) 230/115/13.2KV TRANSFORMER CKT 1'
12G	06NR	3	'FROM->TO'	G11_048	'WOLFFORTH INTERCHANGE - YUMA INTERCHANGE 115KV CKT 1'	160	0.05672	108.0936	'LUBBOCK SOUTH INTERCHANGE (ABB LLM60043) 230/115/13.2KV TRANSFORMER CKT 1'
12G	06NR	3	'FROM->TO'	G11_048	'WOLFFORTH INTERCHANGE - YUMA INTERCHANGE 115KV CKT 1'	160	0.05672	108.0651	'LUBBOCK SOUTH INTERCHANGE (DIS1102LUBS) 230/115/13.2KV TRANSFORMER CKT 2'
12G	06NR	3	'TO->FROM'	G11_048	'CARLISLE INTERCHANGE - LP-DOUD_TP 3115.00 115KV CKT 1'	154	0.05663	107.8882	'BASE CASE'
12G	06NR	3	'FROM->TO'	G11_048	'WOLFFORTH INTERCHANGE - YUMA INTERCHANGE 115KV CKT 1'	160	0.05663	104.7605	'BASE CASE'
12G	06NR	3	'FROM->TO'	G11_048	'WOLFFORTH INTERCHANGE - YUMA INTERCHANGE 115KV CKT 1'	160	0.05662	107.5066	'LUBBOCK POWER & LIGHT-MILWAUKEE - LUBBOCK POWER & LIGHT-VICKSBURG 69KV CKT 1'
12G	06NR	3	'FROM->TO'	G11_048	'WOLFFORTH INTERCHANGE - YUMA INTERCHANGE 115KV CKT 1'	160	0.05662	107.4893	'LUBBOCK POWER & LIGHT-MILWAUKEE (M-E C0681251) 230/69/13.5KV TRANSFORMER CKT 1'
12G	06NR	3	'FROM->TO'	G11_048	'WOLFFORTH INTERCHANGE - YUMA INTERCHANGE 115KV CKT 1'	160	0.05651	106.4961	'ELK CITY 230KV - SWEETWATER 230KV CKT 1'
12G	06NR	3	'FROM->TO'	G11_048	'WOLFFORTH INTERCHANGE - YUMA INTERCHANGE 115KV CKT 1'	160	0.05651	106.5045	'ELK CITY 230KV (ELKCTY-6) 230/138/13.8KV TRANSFORMER CKT 1'
12G	06NR	3	'FROM->TO'	G11_048	'JONES STATION - TUCO INTERCHANGE 230KV CKT 1'	502	0.05633	130.7738	'TOLK STATION EAST - TUCO INTERCHANGE 230KV CKT 1'
12G	06NR	3	'FROM->TO'	G11_048	'WOLFFORTH INTERCHANGE - YUMA INTERCHANGE 115KV CKT 1'	160	0.05632	100.0521	'G05-15T 345.00 - OKLAUNION 345KV CKT 1'
12G	06NR	3	'FROM->TO'	G11_048	'WOLFFORTH INTERCHANGE - YUMA INTERCHANGE 115KV CKT 1'	160	0.05632	100.3755	'G05-15T 345.00 - TUCO INTERCHANGE 345KV CKT 1'
12G	06NR	3	'FROM->TO'	G11_048	'WOLFFORTH INTERCHANGE - YUMA INTERCHANGE 115KV CKT 1'	160	0.05619	100.566	'BORDER 7345.00 - TUCO INTERCHANGE 345KV CKT 1'
12G	06NR	3	'FROM->TO'	G11_048	'WOLFFORTH INTERCHANGE - YUMA INTERCHANGE 115KV CKT 1'	160	0.05588	101.6811	'MUSTANG STATION N. - SEAGRAVES INTERCHANGE 115KV CKT 1'
12G	06NR	3	'FROM->TO'	G11_048	'WOLFFORTH INTERCHANGE - YUMA INTERCHANGE 115KV CKT 1'	160	0.05563	102.2949	'AMARILLO SOUTH INTERCHANGE - G07-48T 230.00 230KV CKT 1'
12G	06NR	3	'FROM->TO'	G11_048	'WOLFFORTH INTERCHANGE - YUMA INTERCHANGE 115KV CKT 1'	160	0.05492	109.7028	'POTTER COUNTY INTERCHANGE (WAUK 90343-A) 345/230/13.2KV TRANSFORMER CKT 1'
12G	06NR	3	'FROM->TO'	G11_048	'WOLFFORTH INTERCHANGE - YUMA INTERCHANGE 115KV CKT 1'	160	0.05481	101.2772	'POTTER COUNTY INTERCHANGE - TUCO INTERCHANGE 345KV CKT 1'
12G	06NR	3	'FROM->TO'	G11_048	'JONES STATION - TUCO INTERCHANGE 230KV CKT 1'	502	0.05445	108.5514	'CHAVESCO 345.00 - EDDY COUNTY INTERCHANGE 345KV CKT 1'
12G	06NR	3	'FROM->TO'	G11_048	'JONES STATION - TUCO INTERCHANGE 230KV CKT 1'	502	0.05445	112.7553	'CHAVESCO 345.00 - TOLK STATION 345KV CKT 1'
12G	06NR	3	'FROM->TO'	G11_048	'JONES STATION - TUCO INTERCHANGE 230KV CKT 1'	502	0.05445	108.5545	'EDDY COUNTY INTERCHANGE (ABB AEM30711) 345/230/13.2KV TRANSFORMER CKT 1'
12G	06NR	3	'FROM->TO'	G11_048	'JONES STATION - TUCO INTERCHANGE 230KV CKT 1'	502	0.05445	112.7255	'TOLK STATION (ABBXNL844501) 345/230/13.2KV TRANSFORMER CKT 1'
12G	06NR	3	'FROM->TO'	G11_048	'JONES STATION - TUCO INTERCHANGE 230KV CKT 1'	502	0.05421	113.2224	'DEAF SMITH COUNTY INTERCHANGE - S-RANDLCO 230.00 230KV CKT 1'
12G	06NR	3	'FROM->TO'	G11_048	'JONES STATION - TUCO INTERCHANGE 230KV CKT 1'	502	0.05406	121.1927	'LUBBOCK EAST INTERCHANGE - TUCO INTERCHANGE 115KV CKT 1'
12G	06NR	3	'FROM->TO'	G11_048	'JONES STATION - TUCO INTERCHANGE 230KV CKT 1'	502	0.05397	111.1925	'HOCKLEY COUNTY INTERCHANGE - Lamb County REC-Opdyke Sub 115KV CKT 1'
12G	06NR	3	'FROM->TO'	G11_048	'JONES STATION - TUCO INTERCHANGE 230KV CKT 1'	502	0.05397	111.3184	'Lamb County REC-Opdyke Sub - SUNDOWN INTERCHANGE 115KV CKT 1'
12G	06NR	3	'TO->FROM'	G11_048	'CARLISLE INTERCHANGE - LP-DOUD_TP 3115.00 115KV CKT 1'	154	0.05377	117.1323	'ALLEN SUB - LUBBOCK SOUTH INTERCHANGE 115KV CKT 1'
12G	06NR	3	'TO->FROM'	G11_048	'CARLISLE INTERCHANGE - LP-DOUD_TP 3115.00 115KV CKT 1'	154	0.05377	109.3645	'ALLEN SUB - SOUTH PLAINS REC-QUAKER 115KV CKT 1'
12G	06NR	3	'TO->FROM'	G11_048	'CARLISLE INTERCHANGE - LP-DOUD_TP 3115.00 115KV CKT 1'	154	0.05377	100.6593	'CARLISLE INTERCHANGE - MURPHY SUB 115KV CKT 1'
12G	06NR	3	'TO->FROM'	G11_048	'CARLISLE INTERCHANGE - LP-DOUD_TP 3115.00 115KV CKT 1'	154	0.05377	103.8106	'MURPHY SUB - South Plains REC-Frankford Sub 115KV CKT 1'
12G	06NR	3	'TO->FROM'	G11_048	'CARLISLE INTERCHANGE - LP-DOUD_TP 3115.00 115KV CKT 1'	154	0.05377	106.3407	'SOUTH PLAINS REC-QUAKER - South Plains REC-Frankford Sub 115KV CKT 1'
12G	06NR	3	'TO->FROM'	G11_048	'LP-DOUD_TP 3115.00 - YUMA INTERCHANGE 115KV CKT 1'	175	0.05377	113.7397	'ALLEN SUB - LUBBOCK SOUTH INTERCHANGE 115KV CKT 1'
12G	06NR	3	'TO->FROM'	G11_048	'LP-DOUD_TP 3115.00 - YUMA INTERCHANGE 115KV CKT 1'	175	0.05377	106.7334	'ALLEN SUB - SOUTH PLAINS REC-QUAKER 115KV CKT 1'
12G	06NR	3	'TO->FROM'	G11_048	'LP-DOUD_TP 3115.00 - YUMA INTERCHANGE 115KV CKT 1'	175	0.05377	101.6912	'MURPHY SUB - South Plains REC-Frankford Sub 115KV CKT 1'
12G	06NR	3	'TO->FROM'	G11_048	'LP-DOUD_TP 3115.00 - YUMA INTERCHANGE 115KV CKT 1'	175	0.05377	103.9864	'SOUTH PLAINS REC-QUAKER - South Plains REC-Frankford Sub 115KV CKT 1'
12G	06NR	3	'FROM->TO'	G11_048	'WOLFFORTH INTERCHANGE - YUMA INTERCHANGE 115KV CKT 1'	160	0.05377	136.6552	'ALLEN SUB - LUBBOCK SOUTH INTERCHANGE 115KV CKT 1'
12G	06NR	3	'FROM->TO'	G11_048	'WOLFFORTH INTERCHANGE - YUMA INTERCHANGE 115KV CKT 1'	160	0.05377	128.6732	'ALLEN SUB - SOUTH PLAINS REC-QUAKER 115KV CKT 1'
12G	06NR	3	'FROM->TO'	G11_048	'WOLFFORTH INTERCHANGE - YUMA INTERCHANGE 115KV CKT 1'	160	0.05377	119.6999	'CARLISLE INTERCHANGE - MURPHY SUB 115KV CKT 1'
12G	06NR	3	'FROM->TO'	G11_048	'WOLFFORTH INTERCHANGE - YUMA INTERCHANGE 115KV CKT 1'	160	0.05377	122.8717	'MURPHY SUB - South Plains REC-Frankford Sub 115KV CKT 1'
12G	06NR	3	'FROM->TO'	G11_048	'WOLFFORTH INTERCHANGE - YUMA INTERCHANGE 115KV CKT 1'	160	0.05377	125.5088	'SOUTH PLAINS REC-QUAKER - South Plains REC-Frankford Sub 115KV CKT 1'
12G	06NR	3	'FROM->TO'	G11_048	'JONES STATION - TUCO INTERCHANGE 230KV CKT 1'	502	0.05376	111.5382	'TOLK STATION EAST - TOLK STATION TAP 230KV CKT 1'
12G	06NR	3	'FROM->TO'	G11_048	'JONES STATION - TUCO INTERCHANGE 230KV CKT 1'	502	0.05374	115.5874	'DEAF SMITH COUNTY INTERCHANGE - PLANT X STATION 230KV CKT 1'
12G	06NR	3	'FROM->TO'	G11_048	'WOLFFORTH INTERCHANGE - YUMA INTERCHANGE 115KV CKT 1'	160	0.0535	101.7978	'PRENTICE SUB - TERRY COUNTY INTERCHANGE 115KV CKT 1'
12G	06NR	3	'FROM->TO'	G11_048	'WOLFFORTH INTERCHANGE - YUMA INTERCHANGE 115KV CKT 1'	160	0.0535	100.496	'PRENTICE SUB - YOAKUM COUNTY INTERCHANGE 115KV CKT 1'
12G	06NR	3	'FROM->TO'	G11_048	'JONES STATION - TUCO INTERCHANGE 230KV CKT 1'	502	0.05314	113.8721	'CARLISLE INTERCHANGE - SOUTH PLAINS REC-ERSKINE 115KV CKT 1'
12G	06NR	3	'FROM->TO'	G11_048	'JONES STATION - TUCO INTERCHANGE 230KV CKT 1'	502	0.05314	113.434	'INDIANA SUB - SOUTH PLAINS REC-ERSKINE 115KV CKT 1'
12G	06NR	3	'FROM->TO'	G11_048	'JONES STATION - TUCO INTERCHANGE 230KV CKT 1'	502	0.05314	112.3034	'INDIANA SUB - STANTON SUB 115KV CKT 1'
12G	06NR	3	'FROM->TO'	G11_048	'JONES STATION - TUCO INTERCHANGE 230KV CKT 1'	502	0.05314	111.8035	'STANTON SUB - TUCO INTERCHANGE 115KV CKT 1'
12G	06NR	3	'FROM->TO'	G11_048	'JONES STATION - TUCO INTERCHANGE 230KV CKT 1'	502	0.05289	114.0955	'PLANT X STATION - S-RANDLCO 230.00 230KV CKT 1'
12G	06NR	3	'FROM->TO'	G11_048	'JONES STATION - TUCO INTERCHANGE 230KV CKT 1'	502	0.05261	114.5182	'POTTER COUNTY INTERCHANGE - S-RANDLCO 230.00 230KV CKT 1'
12G	06NR	3	'FROM->TO'	G11_048	'JONES STATION - TUCO INTERCHANGE 230KV CKT 1'	502	0.05194	113.4774	'BUSHLAND INTERCHANGE - S-RANDLCO 230.00 230KV CKT 1'
12G	06NR	3	'FROM->TO'	G11_048	'JONES STATION - TUCO INTERCHANGE 230KV CKT 1'	502	0.05176	111.7768	'TUCO INTERCHANGE (GE M102345) 230/115/13.2KV TRANSFORMER CKT 1'
12G	06NR	3	'FROM->TO'	G11_048	'JONES STATION - TUCO INTERCHANGE 230KV CKT 1'	502	0.05159	111.672	'TUCO INTERCHANGE (ENRCO 136401) 230/115/13.2KV TRANSFORMER CKT 2'
12G	06NR	3	'FROM->TO'	G11_048	'JONES STATION - TUCO INTERCHANGE 230KV CKT 1'	502	0.05157	110.9306	'CUNNINGHAM STATION - EDDY COUNTY INTERCHANGE 230KV CKT 1'
12G	06NR	3	'FROM->TO'	G11_048	'JONES STATION - TUCO INTERCHANGE 230KV CKT 1'	502	0.05131	112.031	'OASIS INTERCHANGE - SAN JUAN MESA TAP 230KV CKT 1'
12G	06NR	3	'FROM->TO'	G11_048	'JONES STATION - TUCO INTERCHANGE 230KV CKT 1'	502	0.05098	111.6939	'HALE CO INTERCHANGE - KRESS INTERCHANGE 115KV CKT 1'
12G	06NR	3	'FROM->TO'	G11_048	'JONES STATION - TUCO INTERCHANGE 230KV CKT 1'	502	0.05074	112.2673	'BUSHLAND INTERCHANGE - POTTER COUNTY INTERCHANGE 230KV CKT 1'
12G	06NR	3	'FROM->TO'	G11_048	'JONES STATION - TUCO INTERCHANGE 230KV CKT 1'	502	0.05063	111.9249	'LUBBOCK EAST INTERCHANGE - LUBBOCK SOUTH INTERCHANGE 115KV CKT 1'
12G	06NR	3	'FROM->TO'	G11_048	'JONES STATION - TUCO INTERCHANGE 230KV CKT 1'	502	0.05013	110.8498	'CROSBY COUNTY INTERCHANGE - G11_025T 115.00 115KV CKT 1'
12G	06NR	3	'FROM->TO'	G11_048	'JONES STATION - TUCO INTERCHANGE 230KV CKT 1'	502	0.05013	111.4175	'CROSBY COUNTY INTERCHANGE - LUBBOCK EAST INTERCHANGE 115KV CKT 1'
12G	06NR	3	'FROM->TO'	G11_048	'JONES STATION - TUCO INTERCHANGE 230KV CKT 1'	502	0.05013	115.1172	'FLOYD COUNTY INTERCHANGE - G11_025T 115.00 115KV CKT 1'
12G	06NR	3	'FROM->TO'	G11_048	'JONES STATION - TUCO INTERCHANGE 230KV CKT 1'	502	0.05009	116.9671	'Jones Station Bus#2 - LUBBOCK EAST INTERCHANGE 230KV CKT 1'
12G	06NR	3	'FROM->TO'	G11_048	'JONES STATION - TUCO INTERCHANGE 230KV CKT 1'	502	0.05001	110.9411	'DAWN SUB - Panda Energy Substation Hereford 115KV CKT 1'
12G	06NR	3	'FROM->TO'	G11_048	'JONES STATION - TUCO INTERCHANGE 230KV CKT 1'	502	0.05001	110.9563	'HEREFORD INTERCHANGE - Panda Energy Substation Hereford 115KV CKT 1'
12G	06NR	3	'FROM->TO'	G11_048	'JONES STATION - TUCO INTERCHANGE 230KV CKT 1'	502	0.04994	110.7967	'CUNNINGHAM STATION - POTASH JUNCTION INTERCHANGE 230KV CKT 1'
12G	06NR	3	'FROM->TO'	G11_048	'JONES STATION - TUCO INTERCHANGE 230KV CKT 1'	502	0.0498	109.3688	'LAMB COUNTY INTERCHANGE - TOLK STATION WEST 230KV CKT 1'
12G	06NR	3	'FROM->TO'	G11_048	'JONES STATION - TUCO INTERCHANGE 230KV CKT 1'	502	0.0498	109.3664	'LAMB COUNTY INTERCHANGE (WH ALM20172) 230/115/13.2KV TRANSFORMER CKT 1'
12G	06NR	3	'FROM->TO'	G11_048	'JONES STATION - TUCO INTERCHANGE 230KV CKT 1'	502	0.0497	110.9581	'CURRY COUNTY INTERCHANGE - DEAF SMITH REC-#20 115KV CKT 1'
12G	06NR	3	'FROM->TO'	G11_048	'JONES STATION - TUCO INTERCHANGE 230KV CKT 1'	502	0.04947	111.1641	'LUBBOCK POWER & LIGHT-SOUTHEAST - LUBBOCK SOUTH INTERCHANGE 230KV CKT 1'
12G	06NR	3	'FROM->TO'	G11_048	'JONES STATION - TUCO INTERCHANGE 230KV CKT 1'	502	0.04944	111.5371	'Jones Station Bus#2 - LUBBOCK POWER & LIGHT-HOLLY PLANT 230KV CKT 1'
12G	06NR	3	'FROM->TO'	G11_048	'JONES STATION - TUCO INTERCHANGE 230KV CKT 1'	502	0.04944	115.0268	'LUBBOCK EAST INTERCHANGE (ENRCO 136162) 230/115/13.2KV TRANSFORMER CKT 1'
12G	06NR	3	'FROM->TO'	G11_048	'JONES STATION - TUCO INTERCHANGE 230KV CKT 1'	502	0.04934	111.0213	'LUBBOCK EAST INTERCHANGE - LUBBOCK POWER & LIGHT-WADSWORTH 230KV CKT 1'
12G	06NR	3	'FROM->TO'	G11_048	'JONES STATION - TUCO INTERCHANGE 230KV CKT 1'	502	0.0493	110.6445	'FLOYD COUNTY INTERCHANGE - TUCO INTERCHANGE 115KV CKT 1'
12G	06NR	3	'FROM->TO'	G11_048	'JONES STATION - TUCO INTERCHANGE 230KV CKT 1'	502	0.04928	111.614	'PLANT X STATION (WH ALM20171) 230/115/13.2KV TRANSFORMER CKT 1'
12G	06NR	3	'FROM->TO'	G11_048	'JONES STATION - TUCO INTERCHANGE 230KV CKT 1'	502	0.04922	111.7273	'LUBBOCK SOUTH INTERCHANGE (ABB LLM60043) 230/115/13.2KV TRANSFORMER CKT 1'
12G	06NR	3	'FROM->TO'	G11_048	'JONES STATION - TUCO INTERCHANGE 230KV CKT 1'	502	0.04922	111.6364	'LUBBOCK SOUTH INTERCHANGE (DIS1102LUBS) 230/115/13.2KV TRANSFORMER CKT 2'
12G	06NR	3	'FROM->TO'	G11_048	'JONES STATION - TUCO INTERCHANGE 230KV CKT 1'	502	0.04909	110.1328	'BASE CASE'
12G	06NR	3	'FROM->TO'	G11_048	'JONES STATION - TUCO INTERCHANGE 230KV CKT 1'	502	0.04909	111.337	'TUCO INTERCHANGE 230/13.0KV TRANSFORMER CKT 1'
12G	06NR	3	'FROM->TO'	G11_048	'JONES STATION - TUCO INTERCHANGE 230KV CKT 1'	502	0.04906	108.9046	'CARLISLE INTERCHANGE - LUBBOCK POWER & LIGHT-MILWAUKEE 230KV CKT 1'

SEASON	GROUP	SCENARIO	DIRECTION	SOURCE	MONITORED ELEMENT	RATE B (MVA)	TDF	(%MVA) LOADING	CONTINGENCY
12G	06NR	3	'FROM->TO'	G11_048	'JONES STATION - TUCO INTERCHANGE 230KV CKT 1'	502	0.04906	114.0815	'LUBBOCK POWER & LIGHT-MILWAUKEE - LUBBOCK POWER & LIGHT-VICKSBURG 69KV CKT 1'
12G	06NR	3	'FROM->TO'	G11_048	'JONES STATION - TUCO INTERCHANGE 230KV CKT 1'	502	0.04906	114.07	'LUBBOCK POWER & LIGHT-MILWAUKEE (M-E C0681251) 230/69/13.5KV TRANSFORMER CKT 1'
12G	06NR	3	'FROM->TO'	G11_048	'JONES STATION - TUCO INTERCHANGE 230KV CKT 1'	502	0.04898	109.697	'BORDER 7345.00 - WOODWARD DISTRICT EHV 345KV CKT 1'
12G	06NR	3	'FROM->TO'	G11_048	'JONES STATION - TUCO INTERCHANGE 230KV CKT 1'	502	0.04891	112.3579	'GRAPEVINE INTERCHANGE - NICHOLS STATION 230KV CKT 1'
12G	06NR	3	'FROM->TO'	G11_048	'JONES STATION - TUCO INTERCHANGE 230KV CKT 1'	502	0.04881	111.5267	'G11_012T 230.00 - HITCHLAND INTERCHANGE 230KV CKT 1'
12G	06NR	3	'FROM->TO'	G11_048	'JONES STATION - TUCO INTERCHANGE 230KV CKT 1'	502	0.04881	111.361	'G11_012T 230.00 - MOORE COUNTY INTERCHANGE 230KV CKT 1'
12G	06NR	3	'FROM->TO'	G11_048	'JONES STATION - TUCO INTERCHANGE 230KV CKT 1'	502	0.04877	113.483	'ELK CITY 230KV - SWEETWATER 230KV CKT 1'
12G	06NR	3	'FROM->TO'	G11_048	'JONES STATION - TUCO INTERCHANGE 230KV CKT 1'	502	0.04877	113.4922	'ELK CITY 230KV (ELKCTY-6) 230/138/13.8KV TRANSFORMER CKT 1'
12G	06NR	3	'FROM->TO'	G11_048	'JONES STATION - TUCO INTERCHANGE 230KV CKT 1'	502	0.04877	112.2927	'STATELINE INTERCHANGE - STLN-DEMARC6 230KV CKT 1'
12G	06NR	3	'FROM->TO'	G11_048	'JONES STATION - TUCO INTERCHANGE 230KV CKT 1'	502	0.04877	112.3051	'STLN-DEMARC6 - SWEETWATER 230KV CKT 1'
12G	06NR	3	'FROM->TO'	G11_048	'JONES STATION - TUCO INTERCHANGE 230KV CKT 1'	502	0.04872	109.5216	'TUCO INTERCHANGE (DIS1102TUCO) 345/230/13.2KV TRANSFORMER CKT 3'
12G	06NR	3	'FROM->TO'	G11_048	'JONES STATION - TUCO INTERCHANGE 230KV CKT 1'	502	0.04872	109.5216	'TUCO INTERCHANGE (UPDATE DATA) 345/230/13.2KV TRANSFORMER CKT 2'
12G	06NR	3	'FROM->TO'	G11_048	'JONES STATION - TUCO INTERCHANGE 230KV CKT 1'	502	0.04857	108.9926	'TUCO INTERCHANGE (GE M1022338) 345/230/13.2KV TRANSFORMER CKT 1'
12G	06NR	3	'FROM->TO'	G11_048	'JONES STATION - TUCO INTERCHANGE 230KV CKT 1'	502	0.04855	109.316	'CAPROCK REC-1956 - CAPROCK REC-MCDONALD 138KV CKT 1'
12G	06NR	3	'FROM->TO'	G11_048	'JONES STATION - TUCO INTERCHANGE 230KV CKT 1'	502	0.04855	109.4253	'CAPROCK REC-1956 - CAPROCK REC-NEW SCHWARTZ 138KV CKT 1'
12G	06NR	3	'FROM->TO'	G11_048	'JONES STATION - TUCO INTERCHANGE 230KV CKT 1'	502	0.04828	106.8839	'G05-15T 345.00 - OKLAUNION 345KV CKT 1'
12G	06NR	3	'FROM->TO'	G11_048	'JONES STATION - TUCO INTERCHANGE 230KV CKT 1'	502	0.04828	107.1448	'G05-15T 345.00 - TUCO INTERCHANGE 345KV CKT 1'
12G	06NR	3	'FROM->TO'	G11_048	'JONES STATION - TUCO INTERCHANGE 230KV CKT 1'	502	0.04796	108.5714	'BORDER 7345.00 - TUCO INTERCHANGE 345KV CKT 1'
12G	06NR	3	'FROM->TO'	G11_048	'JONES STATION - TUCO INTERCHANGE 230KV CKT 1'	502	0.04724	110.9266	'SUNDOWN INTERCHANGE (WH XDS70381) 230/115/13.8KV TRANSFORMER CKT 1'
12G	06NR	3	'FROM->TO'	G11_048	'JONES STATION - TUCO INTERCHANGE 230KV CKT 1'	502	0.04701	109.1576	'AMARILLO SOUTH INTERCHANGE - G07-48T 230.00 230KV CKT 1'
12G	06NR	3	'FROM->TO'	G11_048	'JONES STATION - TUCO INTERCHANGE 230KV CKT 1'	502	0.04687	118.232	'ALLEN SUB - LUBBOCK SOUTH INTERCHANGE 115KV CKT 1'
12G	06NR	3	'FROM->TO'	G11_048	'JONES STATION - TUCO INTERCHANGE 230KV CKT 1'	502	0.04687	116.1717	'ALLEN SUB - SOUTH PLAINS REC-QUAKER 115KV CKT 1'
12G	06NR	3	'FROM->TO'	G11_048	'JONES STATION - TUCO INTERCHANGE 230KV CKT 1'	502	0.04687	113.7815	'CARLISLE INTERCHANGE - MURPHY SUB 115KV CKT 1'
12G	06NR	3	'FROM->TO'	G11_048	'JONES STATION - TUCO INTERCHANGE 230KV CKT 1'	502	0.04687	114.5949	'MURPHY SUB - South Plains REC-Frankford Sub 115KV CKT 1'
12G	06NR	3	'FROM->TO'	G11_048	'JONES STATION - TUCO INTERCHANGE 230KV CKT 1'	502	0.04687	115.3029	'SOUTH PLAINS REC-QUAKER - South Plains REC-Frankford Sub 115KV CKT 1'
12G	06NR	3	'FROM->TO'	G11_048	'JONES STATION - TUCO INTERCHANGE 230KV CKT 1'	502	0.04685	110.9661	'HOBBS INTERCHANGE - LEA COUNTY INTERCHANGE 230KV CKT 1'
12G	06NR	3	'FROM->TO'	G11_048	'JONES STATION - TUCO INTERCHANGE 230KV CKT 1'	502	0.04663	111.3079	'Jones Station Bus#2 - LUBBOCK SOUTH INTERCHANGE 230KV CKT 2'
12G	06NR	3	'FROM->TO'	G11_048	'JONES STATION - TUCO INTERCHANGE 230KV CKT 1'	502	0.04627	112.0122	'GRASSLAND INTERCHANGE - WOLFFORTH INTERCHANGE 230KV CKT 1'
12G	06NR	3	'FROM->TO'	G11_048	'JONES STATION - TUCO INTERCHANGE 230KV CKT 1'	502	0.04575	109.6366	'SWISHER COUNTY INTERCHANGE - TUCO INTERCHANGE 230KV CKT 1'
12G	06NR	3	'FROM->TO'	G11_048	'JONES STATION - TUCO INTERCHANGE 230KV CKT 1'	502	0.04553	114.6992	'WOLFFORTH INTERCHANGE (WH 7001668) 230/115/13.2KV TRANSFORMER CKT 1'
12G	06NR	3	'FROM->TO'	G11_048	'JONES STATION - TUCO INTERCHANGE 230KV CKT 1'	502	0.04547	111.3156	'JONES STATION - LUBBOCK SOUTH INTERCHANGE 230KV CKT 1'
12G	06NR	3	'FROM->TO'	G11_048	'JONES STATION - TUCO INTERCHANGE 230KV CKT 1'	502	0.04515	105.261	'JONES STATION - Jones Station Bus#2 230KV CKT 1'
12G	06NR	3	'FROM->TO'	G11_048	'JONES STATION - TUCO INTERCHANGE 230KV CKT 1'	502	0.04469	115.982	'POTTER COUNTY INTERCHANGE (WAUK 90343-A) 345/230/13.2KV TRANSFORMER CKT 1'
12G	06NR	3	'FROM->TO'	G11_048	'JONES STATION - TUCO INTERCHANGE 230KV CKT 1'	502	0.0444	109.1955	'POTTER COUNTY INTERCHANGE - TUCO INTERCHANGE 345KV CKT 1'
12G	06NR	3	'FROM->TO'	G11_048	'JONES STATION - TUCO INTERCHANGE 230KV CKT 1'	502	0.04439	112.3681	'BORDEN COUNTY INTERCHANGE - G11_058T 230.00 230KV CKT 1'
12G	06NR	3	'FROM->TO'	G11_048	'JONES STATION - TUCO INTERCHANGE 230KV CKT 1'	502	0.04439	112.3687	'BORDEN COUNTY INTERCHANGE (ABB LL58862) 230/138/13.2KV TRANSFORMER CKT 1'
12G	06NR	3	'FROM->TO'	G11_048	'JONES STATION - TUCO INTERCHANGE 230KV CKT 1'	502	0.04439	107.0308	'CAPROCK REC-MCDONALD - CAPROCK REC-PHILLIPS 138KV CKT 1'
12G	06NR	3	'FROM->TO'	G11_048	'JONES STATION - TUCO INTERCHANGE 230KV CKT 1'	502	0.04439	106.5676	'CAPROCK REC-PHILLIPS - CAPROCK REC-TATE 138KV CKT 1'
12G	06NR	3	'FROM->TO'	G11_048	'JONES STATION - TUCO INTERCHANGE 230KV CKT 1'	502	0.04439	106.3669	'HOBBS INTERCHANGE - MIDLAND COUNTY INTERCHANGE 230KV CKT 1'
12G	06NR	3	'FROM->TO'	G11_048	'JONES STATION - TUCO INTERCHANGE 230KV CKT 1'	502	0.04439	106.3692	'MIDLAND COUNTY INTERCHANGE (ABB LLL58861) 230/138/13.2KV TRANSFORMER CKT 1'
12G	06NR	3	'FROM->TO'	G11_048	'JONES STATION - TUCO INTERCHANGE 230KV CKT 1'	502	0.04433	108.9944	'TERRY COUNTY INTERCHANGE - WOLFFORTH INTERCHANGE 115KV CKT 1'
12G	06NR	3	'FROM->TO'	G11_048	'JONES STATION - TUCO INTERCHANGE 230KV CKT 1'	502	0.04329	103.9688	'GRASSLAND INTERCHANGE - Jones Station Bus#2 230KV CKT 1'
12G	06NR	3	'FROM->TO'	G11_048	'TOLK STATION EAST - TUCO INTERCHANGE 230KV CKT 1'	502	0.03726	100.5764	'JONES STATION - TUCO INTERCHANGE 230KV CKT 1'
12SP	00NR	0	'FROM->TO'	G11_049	'MATTHEWSON 345.00 - NORTHWEST 345KV CKT 1'	1195	0.307	112.53	'DBL-MATT-CIM'
13SP	00NR	0	'FROM->TO'	G11_049	'MATTHEWSON 345.00 - NORTHWEST 345KV CKT 1'	1195	0.305	112.07	'DBL-MATT-CIM'
12WP	00NR	0	'FROM->TO'	G11_049	'MATTHEWSON 345.00 - NORTHWEST 345KV CKT 1'	1195	0.283	135.11	'DBL-MATT-CIM'
13WP	00NR	0	'FROM->TO'	G11_049	'MATTHEWSON 345.00 - NORTHWEST 345KV CKT 1'	1195	0.282	135.51	'DBL-MATT-CIM'
17WP	00NR	0	'FROM->TO'	G11_049	'MATTHEWSON 345.00 - NORTHWEST 345KV CKT 1'	1195	0.282	129.10	'DBL-MATT-CIM'
12G	03ALL	0		G11_049	NCONV-Iteration Limit	0	0.227	9999.00	'DBL-MATT-TAT'
12G	03ALL2	0		G11_049	NCONV-Iteration Limit	0	0.227	9999.00	'DBL-MATT-TAT'
12G	03ALL	0		G11_049	NCONV-Iteration Limit	0	0.172	9999.00	'DBL-WICH-THI'
12G	03ALL2	0		G11_049	NCONV-Blown Up	0	0.172	9999.00	'DBL-WICH-THI'
12WP	00NR	0	'TO->FROM'	G11_049	'BENTON - WICHITA 345KV CKT 1'	956	0.172	108.26	'DBL-MATT-TAT'
13WP	00NR	0	'TO->FROM'	G11_049	'BENTON - WICHITA 345KV CKT 1'	956	0.170	105.51	'DBL-MATT-TAT'
12SP	00NR	0	'TO->FROM'	G11_049	'BENTON - WICHITA 345KV CKT 1'	956	0.167	100.67	'DBL-MATT-TAT'
12WP	00NR	0	'FROM->TO'	G11_049	'CIMARRON - DRAPER LAKE 345KV CKT 1'	717	0.163	112.50	'ARCADIA - NORTHWEST 345KV CKT 1'
13WP	00NR	0	'FROM->TO'	G11_049	'CIMARRON - DRAPER LAKE 345KV CKT 1'	717	0.151	117.35	'ARCADIA - NORTHWEST 345KV CKT 1'
17WP	00NR	0	'FROM->TO'	G11_049	'CIMARRON - DRAPER LAKE 345KV CKT 1'	717	0.144	104.47	'ARCADIA - NORTHWEST 345KV CKT 1'
12WP	00NR	0	'FROM->TO'	G11_049	'CIMARRON - DRAPER LAKE 345KV CKT 1'	717	0.135	117.18	'LAWTON EASTSIDE - SUNNYSIDE 345KV CKT 1'
12WP	00NR	0	'FROM->TO'	G11_049	'CIMARRON - DRAPER LAKE 345KV CKT 1'	717	0.127	106.21	'MATTHEWSON 345.00 - NORTHWEST 345KV CKT 1'
13WP	00NR	0	'FROM->TO'	G11_049	'CIMARRON - DRAPER LAKE 345KV CKT 1'	717	0.125	121.69	'LAWTON EASTSIDE - SUNNYSIDE 345KV CKT 1'
12WP	00NR	0	'FROM->TO'	G11_049	'CIMARRON - DRAPER LAKE 345KV CKT 1'	717	0.121	100.18	'CIMARRON - NORTHWEST 345KV CKT 1'
12WP	00NR	0	'TO->FROM'	G11_049	'BENTON - WICHITA 345KV CKT 1'	956	0.121	111.25	'GEN532751 1-WOLF CREEK GENERATING STATION UNIT 1'
17WP	00NR	0	'FROM->TO'	G11_049	'CIMARRON - DRAPER LAKE 345KV CKT 1'	717	0.121	109.96	'LAWTON EASTSIDE - SUNNYSIDE 345KV CKT 1'
12WP	00NR	0	'FROM->TO'	G11_049	'CIMARRON - DRAPER LAKE 345KV CKT 1'	717	0.120	100.00	'LAWTON EASTSIDE - OKLAUNION 345KV CKT 1'
13WP	00NR	0	'TO->FROM'	G11_049	'BENTON - WICHITA 345KV CKT 1'	956	0.120	109.79	'GEN532751 1-WOLF CREEK GENERATING STATION UNIT 1'
12WP	00NR	0	'FROM->TO'	G11_049	'CIMARRON - DRAPER LAKE 345KV CKT 1'	717	0.120	108.82	'ARCADIA - HORSESHOE LAKE 345KV CKT 1'
12WP	00NR	0	'FROM->TO'	G11_049	'CIMARRON - DRAPER LAKE 345KV CKT 1'	717	0.120	108.82	'HORSESHOE LAKE - SEMINOLE 345KV CKT 1'
12WP	00NR	0	'FROM->TO'	G11_049	'CIMARRON - DRAPER LAKE 345KV CKT 1'	717	0.120	102.04	'DBL-WICH-THI'
12WP	00NR	0	'FROM->TO'	G11_049	'CIMARRON - DRAPER LAKE 345KV CKT 1'	717	0.120	100.00	'JOHNSON COUNTY - SUNNYSIDE 345KV CKT 1'
12WP	00NR	0	'FROM->TO'	G11_049	'CIMARRON - DRAPER LAKE 345KV CKT 1'	717	0.119	109.18	'CLEVELAND - SOONER 345KV CKT 1'
12WP	00NR	0	'FROM->TO'	G11_049	'CIMARRON - DRAPER LAKE 345KV CKT 1'	717	0.119	104.13	'CIMARRON - SARA 138KV CKT 1'
12WP	00NR	0	'FROM->TO'	G11_049	'CIMARRON - DRAPER LAKE 345KV CKT 1'	717	0.119	102.88	'MCCLAIN - SARA 138KV CKT 1'
13WP	00NR	0	'FROM->TO'	G11_049	'CIMARRON - DRAPER LAKE 345KV CKT 1'	717	0.118	110.42	'MATTHEWSON 345.00 - NORTHWEST 345KV CKT 1'
12WP	00NR	0	'FROM->TO'	G11_049	'CIMARRON - DRAPER LAKE 345KV CKT 1'	717	0.118	102.84	'CIMARRON - CZECH HALL 138KV CKT 1'
12WP	00NR	0	'FROM->TO'	G11_049	'CIMARRON - DRAPER LAKE 345KV CKT 1'	717	0.118	102.39	'CZECH HALL - XEROX 138KV CKT 1'
12WP	00NR	0	'FROM->TO'	G11_049	'CIMARRON - DRAPER LAKE 345KV CKT 1'	717	0.118	102.37	'MORGAN - XEROX 138KV CKT 1'
12WP	00NR	0	'FROM->TO'	G11_049	'CIMARRON - DRAPER LAKE 345KV CKT 1'	717	0.118	102.26	'MORGAN - MUSTANG 138KV CKT 1'

SEASON	GROUP	SCENARIO	DIRECTION	SOURCE	MONITORED ELEMENT	RATE B (MVA)	TDF	(%MVA) LOADING	CONTINGENCY
17WP	00NR	0	'TO->FROM'	G11_049	'BENTON - WICHITA 345KV CKT 1'	956	0.118	106.16	'GEN532751 1-WOLF CREEK GENERATING STATION UNIT 1'
12WP	00NR	0	'FROM->TO'	G11_049	'CIMARRON - DRAPER LAKE 345KV CKT 1'	717	0.118	104.28	'CLEVELAND - TULSA NORTH 345KV CKT 1'
12WP	00NR	0	'FROM->TO'	G11_049	'CIMARRON - DRAPER LAKE 345KV CKT 1'	717	0.118	100.97	'ANADARKO - POCASSETT 138KV CKT 1'
12WP	00NR	0	'FROM->TO'	G11_049	'CIMARRON - DRAPER LAKE 345KV CKT 1'	717	0.118	100.79	'POCASSETT - TUTTLE 138KV CKT 1'
12WP	00NR	0	'FROM->TO'	G11_049	'CIMARRON - DRAPER LAKE 345KV CKT 1'	717	0.118	100.35	'SUNSHINE CANYON - TUTTLE 138KV CKT 1'
12WP	00NR	0	'FROM->TO'	G11_049	'CIMARRON - DRAPER LAKE 345KV CKT 1'	717	0.117	100.96	'CANEYRV7 345.00 - NEOSHO 345KV CKT 1'
12WP	00NR	0	'FROM->TO'	G11_049	'CIMARRON - DRAPER LAKE 345KV CKT 1'	717	0.117	100.82	'CANEYRV7 345.00 - LATHAMS7 345.00 345KV CKT 1'
12WP	00NR	0	'FROM->TO'	G11_049	'CIMARRON - DRAPER LAKE 345KV CKT 1'	717	0.117	100.35	'LATHAMS7 345.00 - ROSE HILL 345KV CKT 1'
12WP	00NR	0	'FROM->TO'	G11_049	'CIMARRON - DRAPER LAKE 345KV CKT 1'	717	0.116	101.59	'NORTHWEST (NORTWST2) 345/138/13.8KV TRANSFORMER CKT 1'
17SP	00NR	0	'TO->FROM'	G11_049	'BENTON - WICHITA 345KV CKT 1'	956	0.116	108.74	'GEN532751 1-WOLF CREEK GENERATING STATION UNIT 1'
12WP	00NR	0	'FROM->TO'	G11_049	'CIMARRON - DRAPER LAKE 345KV CKT 1'	717	0.116	100.80	'NORTHWEST (NORTWST3) 345/138/13.8KV TRANSFORMER CKT 1'
12WP	00NR	0	'FROM->TO'	G11_049	'CIMARRON - DRAPER LAKE 345KV CKT 1'	717	0.116	103.74	'CIMARRON (CIMARON1) 345/138/13.8KV TRANSFORMER CKT 1'
12WP	00NR	0	'FROM->TO'	G11_049	'CIMARRON - DRAPER LAKE 345KV CKT 1'	717	0.116	103.53	'CIMARRON (CIMARON2) 345/138/13.8KV TRANSFORMER CKT 1'
13WP	00NR	0	'FROM->TO'	G11_049	'CIMARRON - DRAPER LAKE 345KV CKT 1'	717	0.116	105.74	'DBL-THIS-WWR'
12WP	00NR	0	'FROM->TO'	G11_049	'CIMARRON - DRAPER LAKE 345KV CKT 1'	717	0.116	101.12	'ANDERSONCO 345.00 - LACYGNE 345KV CKT 1'
12WP	00NR	0	'FROM->TO'	G11_049	'CIMARRON - DRAPER LAKE 345KV CKT 1'	717	0.116	101.01	'ANDERSONCO 345.00 - WOLF CREEK 345KV CKT 1'
12WP	00NR	0	'FROM->TO'	G11_049	'CIMARRON - DRAPER LAKE 345KV CKT 1'	717	0.116	100.63	'REDBUD - RIVERSIDE STATION 345KV CKT 1'
17WP	00NR	0	'FROM->TO'	G11_049	'CIMARRON - DRAPER LAKE 345KV CKT 1'	717	0.115	101.14	'MATTHEWSON 345.00 - NORTHWEST 345KV CKT 1'
12WP	00NR	0	'FROM->TO'	G11_049	'CIMARRON - DRAPER LAKE 345KV CKT 1'	717	0.115	106.80	'GEN336821 1-GRAND GULF UNIT'
12WP	00NR	0	'FROM->TO'	G11_049	'CIMARRON - DRAPER LAKE 345KV CKT 1'	717	0.115	106.35	'GEN336153 1-WATERFORD UNIT#3'
12WP	00NR	0	'FROM->TO'	G11_049	'CIMARRON - DRAPER LAKE 345KV CKT 1'	717	0.115	105.55	'GEN515042 1-SEMINOLE 3G'
12WP	00NR	0	'FROM->TO'	G11_049	'CIMARRON - DRAPER LAKE 345KV CKT 1'	717	0.115	105.38	'GEN337911 1-ARKANSAS NUCLEAR ONE UNIT #2'
12WP	00NR	0	'FROM->TO'	G11_049	'CIMARRON - DRAPER LAKE 345KV CKT 1'	717	0.115	105.22	'GEN335831 1-RIVERBEND UNIT#1'
12WP	00NR	0	'FROM->TO'	G11_049	'CIMARRON - DRAPER LAKE 345KV CKT 1'	717	0.115	104.59	'GEN515041 1-SEMINOLE 2G'
12WP	00NR	0	'FROM->TO'	G11_049	'CIMARRON - DRAPER LAKE 345KV CKT 1'	717	0.115	104.30	'GEN501801 1-DOLET HILLS UNIT1'
12WP	00NR	0	'FROM->TO'	G11_049	'CIMARRON - DRAPER LAKE 345KV CKT 1'	717	0.115	104.15	'GEN337910 1-ARKANSAS NUCLEAR ONE UNIT #1'
12WP	00NR	0	'FROM->TO'	G11_049	'CIMARRON - DRAPER LAKE 345KV CKT 1'	717	0.115	103.74	'GEN520947 1-HUGO1'
12WP	00NR	0	'FROM->TO'	G11_049	'CIMARRON - DRAPER LAKE 345KV CKT 1'	717	0.115	103.26	'GEN337652 1-WHITE BLUFF UNIT #1'
12WP	00NR	0	'FROM->TO'	G11_049	'CIMARRON - DRAPER LAKE 345KV CKT 1'	717	0.115	102.89	'GEN509403 1-PIRKEY GENERATION'
12WP	00NR	0	'FROM->TO'	G11_049	'CIMARRON - DRAPER LAKE 345KV CKT 1'	717	0.115	102.89	'GEN509416 1-TURK GENERATION'
12WP	00NR	0	'FROM->TO'	G11_049	'CIMARRON - DRAPER LAKE 345KV CKT 1'	717	0.115	102.70	'GEN336252 1-NINEMILE POINT UNIT#5'
12WP	00NR	0	'FROM->TO'	G11_049	'CIMARRON - DRAPER LAKE 345KV CKT 1'	717	0.115	102.68	'GEN338146 1-INDEPENDENCE UNIT #2'
12WP	00NR	0	'FROM->TO'	G11_049	'CIMARRON - DRAPER LAKE 345KV CKT 1'	717	0.115	102.67	'GEN515040 1-SEMINOLE 1G'
12WP	00NR	0	'FROM->TO'	G11_049	'CIMARRON - DRAPER LAKE 345KV CKT 1'	717	0.115	102.66	'GEN336251 1-NINEMILE POINT UNIT#4'
12WP	00NR	0	'FROM->TO'	G11_049	'CIMARRON - DRAPER LAKE 345KV CKT 1'	717	0.115	102.60	'GEN501813 1-RODEMACHER UNIT 3'
12WP	00NR	0	'FROM->TO'	G11_049	'CIMARRON - DRAPER LAKE 345KV CKT 1'	717	0.115	102.51	'GEN338143 1-INDEPENDENCE UNIT #1'
12WP	00NR	0	'FROM->TO'	G11_049	'CIMARRON - DRAPER LAKE 345KV CKT 1'	717	0.115	102.49	'GEN337041 1-GERALD ANDRUS'
12WP	00NR	0	'FROM->TO'	G11_049	'CIMARRON - DRAPER LAKE 345KV CKT 1'	717	0.115	102.45	'GEN337653 1-WHITE BLUFF UNIT #2'
12WP	00NR	0	'FROM->TO'	G11_049	'CIMARRON - DRAPER LAKE 345KV CKT 1'	717	0.115	101.98	'GEN501812 1-RODEMACHER UNIT 2'
12WP	00NR	0	'FROM->TO'	G11_049	'CIMARRON - DRAPER LAKE 345KV CKT 1'	717	0.115	101.96	'GEN509406 1-WELSH #3'
12WP	00NR	0	'FROM->TO'	G11_049	'CIMARRON - DRAPER LAKE 345KV CKT 1'	717	0.115	101.96	'GEN509405 1-WELSH #2'
12WP	00NR	0	'FROM->TO'	G11_049	'CIMARRON - DRAPER LAKE 345KV CKT 1'	717	0.115	101.96	'GEN509404 1-WELSH #1'
12WP	00NR	0	'FROM->TO'	G11_049	'CIMARRON - DRAPER LAKE 345KV CKT 1'	717	0.115	101.85	'GEN335206 1-NELSON UNIT 6'
12WP	00NR	0	'FROM->TO'	G11_049	'CIMARRON - DRAPER LAKE 345KV CKT 1'	717	0.115	101.64	'GEN336831 1-BAXTER WILSON SES'
12WP	00NR	0	'FROM->TO'	G11_049	'CIMARRON - DRAPER LAKE 345KV CKT 1'	717	0.115	101.61	'GEN334440 1-SABINE UNIT 4'
12WP	00NR	0	'FROM->TO'	G11_049	'CIMARRON - DRAPER LAKE 345KV CKT 1'	717	0.115	101.61	'GEN515226 1-MUSKOGEE 6G'
12WP	00NR	0	'FROM->TO'	G11_049	'CIMARRON - DRAPER LAKE 345KV CKT 1'	717	0.115	101.42	'GEN338388 1-1PLUMPT 23.000'
12WP	00NR	0	'FROM->TO'	G11_049	'CIMARRON - DRAPER LAKE 345KV CKT 1'	717	0.115	101.22	'GEN515225 1-MUSKOGEE 5G'
12WP	00NR	0	'FROM->TO'	G11_049	'CIMARRON - DRAPER LAKE 345KV CKT 1'	717	0.115	101.22	'GEN515223 1-MUSKOGEE 4G'
12WP	00NR	0	'FROM->TO'	G11_049	'CIMARRON - DRAPER LAKE 345KV CKT 1'	717	0.115	101.19	'GEN335204 1-NELSON UNIT 4'
12WP	00NR	0	'FROM->TO'	G11_049	'CIMARRON - DRAPER LAKE 345KV CKT 1'	717	0.115	101.11	'GEN334433 1-SABINE UNIT 3'
12WP	00NR	0	'FROM->TO'	G11_049	'CIMARRON - DRAPER LAKE 345KV CKT 1'	717	0.115	101.11	'GEN336801 1-BAXTER WILSON UNIT #1'
12WP	00NR	0	'FROM->TO'	G11_049	'CIMARRON - DRAPER LAKE 345KV CKT 1'	717	0.115	101.11	'GEN334441 1-SABINE UNIT 5'
12WP	00NR	0	'FROM->TO'	G11_049	'CIMARRON - DRAPER LAKE 345KV CKT 1'	717	0.115	100.00	'GEN336170 1-GULF OXY U4'
13WP	00NR	0	'FROM->TO'	G11_049	'CIMARRON - DRAPER LAKE 345KV CKT 1'	717	0.113	107.46	'CIMARRON - SARA 138KV CKT 1'
13WP	00NR	0	'FROM->TO'	G11_049	'CIMARRON - DRAPER LAKE 345KV CKT 1'	717	0.113	106.37	'MCCLAIN - SARA 138KV CKT 1'
13WP	00NR	0	'FROM->TO'	G11_049	'CIMARRON - DRAPER LAKE 345KV CKT 1'	717	0.113	104.53	'CIMARRON - NORTHWEST 345KV CKT 1'
13WP	00NR	0	'FROM->TO'	G11_049	'CIMARRON - DRAPER LAKE 345KV CKT 1'	717	0.112	103.94	'SOONER - WOODRING 345KV CKT 1'
13WP	00NR	0	'FROM->TO'	G11_049	'CIMARRON - DRAPER LAKE 345KV CKT 1'	717	0.112	103.95	'LAWTON EASTSIDE - OKLAUNION 345KV CKT 1'
13WP	00NR	0	'FROM->TO'	G11_049	'CIMARRON - DRAPER LAKE 345KV CKT 1'	717	0.112	103.23	'G05-15T 345.00 - OKLAUNION 345KV CKT 1'
13WP	00NR	0	'FROM->TO'	G11_049	'CIMARRON - DRAPER LAKE 345KV CKT 1'	717	0.112	103.13	'G05-15T 345.00 - TUCO INTERCHANGE 345KV CKT 1'
12G	06ALL	0		G11_049	NCONV-Iteration Limit	0	0.111	9999.00	'DBL-HTCH-BVR'
13WP	00NR	0	'FROM->TO'	G11_049	'CIMARRON - DRAPER LAKE 345KV CKT 1'	717	0.111	104.56	'JOHNSON COUNTY - SUNNYSIDE 345KV CKT 1'
13WP	00NR	0	'FROM->TO'	G11_049	'CIMARRON - DRAPER LAKE 345KV CKT 1'	717	0.111	103.06	'JOHNSON COUNTY - PITTSBURG 345KV CKT 1'
13WP	00NR	0	'FROM->TO'	G11_049	'CIMARRON - DRAPER LAKE 345KV CKT 1'	717	0.111	101.78	'PECAN CREEK - RIVERSIDE STATION 345KV CKT 1'
13WP	00NR	0	'FROM->TO'	G11_049	'CIMARRON - DRAPER LAKE 345KV CKT 1'	717	0.110	113.22	'CLEVELAND - SOONER 345KV CKT 1'
13WP	00NR	0	'FROM->TO'	G11_049	'CIMARRON - DRAPER LAKE 345KV CKT 1'	717	0.110	103.55	'SUNSHINE CANYON - WESTMOORE 138KV CKT 1'
13WP	00NR	0	'FROM->TO'	G11_049	'CIMARRON - DRAPER LAKE 345KV CKT 1'	717	0.110	102.92	'FRANKLIN SW - WESTMOORE 138KV CKT 1'
13WP	00NR	0	'FROM->TO'	G11_049	'CIMARRON - DRAPER LAKE 345KV CKT 1'	717	0.110	106.85	'CIMARRON - CZECH HALL 138KV CKT 1'
13WP	00NR	0	'FROM->TO'	G11_049	'CIMARRON - DRAPER LAKE 345KV CKT 1'	717	0.110	106.40	'CZECH HALL - XEROX 138KV CKT 1'
13WP	00NR	0	'FROM->TO'	G11_049	'CIMARRON - DRAPER LAKE 345KV CKT 1'	717	0.110	106.38	'MORGAN - XEROX 138KV CKT 1'
13WP	00NR	0	'FROM->TO'	G11_049	'CIMARRON - DRAPER LAKE 345KV CKT 1'	717	0.110	106.33	'MORGAN - MUSTANG 138KV CKT 1'
13WP	00NR	0	'FROM->TO'	G11_049	'CIMARRON - DRAPER LAKE 345KV CKT 1'	717	0.110	103.16	'THISTLE 7 345.00 - WOODWARD DISTRICT EHV 345KV CKT 1'
13WP	00NR	0	'FROM->TO'	G11_049	'CIMARRON - DRAPER LAKE 345KV CKT 1'	717	0.110	103.16	'THISTLE 7 345.00 - WOODWARD DISTRICT EHV 345KV CKT 2'
13WP	00NR	0	'FROM->TO'	G11_049	'CIMARRON - DRAPER LAKE 345KV CKT 1'	717	0.109	102.86	'CLARKSVILLE - ONETA 345KV CKT 1'
13WP	00NR	0	'FROM->TO'	G11_049	'CIMARRON - DRAPER LAKE 345KV CKT 1'	717	0.109	105.06	'ANADARKO - POCASSETT 138KV CKT 1'
13WP	00NR	0	'FROM->TO'	G11_049	'CIMARRON - DRAPER LAKE 345KV CKT 1'	717	0.109	104.88	'POCASSETT - TUTTLE 138KV CKT 1'
13WP	00NR	0	'FROM->TO'	G11_049	'CIMARRON - DRAPER LAKE 345KV CKT 1'	717	0.109	104.44	'SUNSHINE CANYON - TUTTLE 138KV CKT 1'

SEASON	GROUP	SCENARIO	DIRECTION	SOURCE	MONITORED ELEMENT	RATE B (MVA)	TDF	(%MVA) LOADING	CONTINGENCY
13WP	00NR	0	'FROM->TO'	G11_049	'CIMARRON - DRAPER LAKE 345KV CKT 1'	717	0.109	108.44	'CLEVELAND - TULSA NORTH 345KV CKT 1'
13WP	00NR	0	'FROM->TO'	G11_049	'CIMARRON - DRAPER LAKE 345KV CKT 1'	717	0.109	103.77	'BENTON - WICHITA 345KV CKT 1'
13WP	00NR	0	'FROM->TO'	G11_049	'CIMARRON - DRAPER LAKE 345KV CKT 1'	717	0.109	103.37	'BLANCHARD - CORNVILLE 138KV CKT 1'
13WP	00NR	0	'FROM->TO'	G11_049	'CIMARRON - DRAPER LAKE 345KV CKT 1'	717	0.109	103.17	'BLANCHARD - MAUD 138KV CKT 1'
13WP	00NR	0	'FROM->TO'	G11_049	'CIMARRON - DRAPER LAKE 345KV CKT 1'	717	0.109	105.18	'CANEYRV7 345.00 - NEOSHO 345KV CKT 1'
13WP	00NR	0	'FROM->TO'	G11_049	'CIMARRON - DRAPER LAKE 345KV CKT 1'	717	0.109	105.04	'CANEYRV7 345.00 - LATHAMS7 345.00 345KV CKT 1'
13WP	00NR	0	'FROM->TO'	G11_049	'CIMARRON - DRAPER LAKE 345KV CKT 1'	717	0.109	104.54	'LATHAMS7 345.00 - ROSE HILL 345KV CKT 1'
13WP	00NR	0	'FROM->TO'	G11_049	'CIMARRON - DRAPER LAKE 345KV CKT 1'	717	0.109	102.68	'DBL-FINY-HOL'
13WP	00NR	0	'FROM->TO'	G11_049	'CIMARRON - DRAPER LAKE 345KV CKT 1'	717	0.109	103.39	'OGE3TERM18'
13WP	00NR	0	'FROM->TO'	G11_049	'CIMARRON - DRAPER LAKE 345KV CKT 1'	717	0.109	103.29	'36 & MERIDIAN - PENNSYLVANIA 138KV CKT 1'
13WP	00NR	0	'FROM->TO'	G11_049	'CIMARRON - DRAPER LAKE 345KV CKT 1'	717	0.109	114.08	'ARCADIA - HORSESHOE LAKE 345KV CKT 1'
13WP	00NR	0	'FROM->TO'	G11_049	'CIMARRON - DRAPER LAKE 345KV CKT 1'	717	0.109	114.05	'HORSESHOE LAKE - SEMINOLE 345KV CKT 1'
13WP	00NR	0	'FROM->TO'	G11_049	'CIMARRON - DRAPER LAKE 345KV CKT 1'	717	0.109	103.87	'NORTHEAST STATION - ONETA 345KV CKT 1'
13WP	00NR	0	'FROM->TO'	G11_049	'CIMARRON - DRAPER LAKE 345KV CKT 1'	717	0.109	103.25	'MINGO - RED WILLOW 345KV CKT 1'
13WP	00NR	0	'FROM->TO'	G11_049	'CIMARRON - DRAPER LAKE 345KV CKT 1'	717	0.108	101.56	'DELAWARE - NORTHEAST STATION 345KV CKT 1'
13WP	00NR	0	'FROM->TO'	G11_049	'CIMARRON - DRAPER LAKE 345KV CKT 1'	717	0.108	103.22	'MINGO - SETAB 345KV CKT 1'
13WP	00NR	0	'FROM->TO'	G11_049	'CIMARRON - DRAPER LAKE 345KV CKT 1'	717	0.108	107.59	'CIMARRON (CIMARON1) 345/138/13.8KV TRANSFORMER CKT 1'
13WP	00NR	0	'FROM->TO'	G11_049	'CIMARRON - DRAPER LAKE 345KV CKT 1'	717	0.108	107.39	'CIMARRON (CIMARON2) 345/138/13.8KV TRANSFORMER CKT 1'
13WP	00NR	0	'FROM->TO'	G11_049	'CIMARRON - DRAPER LAKE 345KV CKT 1'	717	0.108	100.09	'FRANKLIN SW - MIDWEST TAP 138KV CKT 1'
13WP	00NR	0	'FROM->TO'	G11_049	'CIMARRON - DRAPER LAKE 345KV CKT 1'	717	0.108	100.00	'CHAMBER SPRINGS - CLARKSVILLE 345KV CKT 1'
13WP	00NR	0	'FROM->TO'	G11_049	'CIMARRON - DRAPER LAKE 345KV CKT 1'	717	0.108	103.58	'CIMARRON - HAYMAKER 138KV CKT 1'
13WP	00NR	0	'FROM->TO'	G11_049	'CIMARRON - DRAPER LAKE 345KV CKT 1'	717	0.108	103.44	'DIVISION AVE - HAYMAKER 138KV CKT 1'
13WP	00NR	0	'FROM->TO'	G11_049	'CIMARRON - DRAPER LAKE 345KV CKT 1'	717	0.108	103.36	'CLASSEN - ROBINSON 138KV CKT 1'
13WP	00NR	0	'FROM->TO'	G11_049	'CIMARRON - DRAPER LAKE 345KV CKT 1'	717	0.108	102.94	'LIGHTNING CREEK - ROBINSON 138KV CKT 1'
13WP	00NR	0	'FROM->TO'	G11_049	'CIMARRON - DRAPER LAKE 345KV CKT 1'	717	0.108	102.78	'LIGHTNING CREEK - TROSPER 138KV CKT 1'
13WP	00NR	0	'FROM->TO'	G11_049	'CIMARRON - DRAPER LAKE 345KV CKT 1'	717	0.108	102.88	'HOLCOMB - SETAB 345KV CKT 1'
13WP	00NR	0	'FROM->TO'	G11_049	'CIMARRON - DRAPER LAKE 345KV CKT 1'	717	0.108	103.09	'THISTLE 7 345.00 - WICHITA 345KV CKT 1'
13WP	00NR	0	'FROM->TO'	G11_049	'CIMARRON - DRAPER LAKE 345KV CKT 1'	717	0.108	103.09	'THISTLE 7 345.00 - WICHITA 345KV CKT 2'
13WP	00NR	0	'FROM->TO'	G11_049	'CIMARRON - DRAPER LAKE 345KV CKT 1'	717	0.108	103.55	'LACYGNE - NEOSHO 345KV CKT 1'
13WP	00NR	0	'FROM->TO'	G11_049	'CIMARRON - DRAPER LAKE 345KV CKT 1'	717	0.108	105.59	'NORTHWEST (NORTWST2) 345/138/13.8KV TRANSFORMER CKT 1'
13WP	00NR	0	'FROM->TO'	G11_049	'CIMARRON - DRAPER LAKE 345KV CKT 1'	717	0.108	103.26	'TULSA NORTH - WEKIWA 345KV CKT 1'
13WP	00NR	0	'FROM->TO'	G11_049	'CIMARRON - DRAPER LAKE 345KV CKT 1'	717	0.108	102.69	'SAPULPA ROAD - WEKIWA 345KV CKT 1'
13WP	00NR	0	'FROM->TO'	G11_049	'CIMARRON - DRAPER LAKE 345KV CKT 1'	717	0.108	101.73	'MUSKOGEE - PECAN CREEK 345KV CKT 2'
13WP	00NR	0	'FROM->TO'	G11_049	'CIMARRON - DRAPER LAKE 345KV CKT 1'	717	0.108	104.85	'NORTHWEST (NORTWST3) 345/138/13.8KV TRANSFORMER CKT 1'
13WP	00NR	0	'FROM->TO'	G11_049	'CIMARRON - DRAPER LAKE 345KV CKT 1'	717	0.108	103.58	'QUAIL CREEK - SKYLINE 138KV CKT 1'
13WP	00NR	0	'FROM->TO'	G11_049	'CIMARRON - DRAPER LAKE 345KV CKT 1'	717	0.108	103.31	'OGE3TERM20'
13WP	00NR	0	'FROM->TO'	G11_049	'CIMARRON - DRAPER LAKE 345KV CKT 1'	717	0.108	103.93	'AXTELL - POST ROCK 345KV CKT 1'
13WP	00NR	0	'FROM->TO'	G11_049	'CIMARRON - DRAPER LAKE 345KV CKT 1'	717	0.108	103.28	'KETCH TAP - NORTHWEST 138KV CKT 1'
13WP	00NR	0	'FROM->TO'	G11_049	'CIMARRON - DRAPER LAKE 345KV CKT 1'	717	0.108	100.76	'FT SMITH - MUSKOGEE 345KV CKT 1'
13WP	00NR	0	'FROM->TO'	G11_049	'CIMARRON - DRAPER LAKE 345KV CKT 1'	717	0.108	103.30	'OGE3TERM11'
13WP	00NR	0	'FROM->TO'	G11_049	'CIMARRON - DRAPER LAKE 345KV CKT 1'	717	0.108	102.95	'MARSHALL - WOODRING 138KV CKT 1'
13WP	00NR	0	'FROM->TO'	G11_049	'CIMARRON - DRAPER LAKE 345KV CKT 1'	717	0.108	102.95	'COTTONWOOD CREEK - MARSHALL 138KV CKT 1'
13WP	00NR	0	'FROM->TO'	G11_049	'CIMARRON - DRAPER LAKE 345KV CKT 1'	717	0.108	100.87	'OAKCREEK - WILD MARY 138KV CKT 1'
13WP	00NR	0	'FROM->TO'	G11_049	'CIMARRON - DRAPER LAKE 345KV CKT 1'	717	0.108	100.61	'AIRDEPT4 138.00 - WILD MARY 138KV CKT 1'
13WP	00NR	0	'FROM->TO'	G11_049	'CIMARRON - DRAPER LAKE 345KV CKT 1'	717	0.108	100.61	'AIRDEPT4 138.00 - GM 138KV CKT 1'
13WP	00NR	0	'FROM->TO'	G11_049	'CIMARRON - DRAPER LAKE 345KV CKT 1'	717	0.108	100.35	'DRAPER LAKE - GM 138KV CKT 1'
13WP	00NR	0	'FROM->TO'	G11_049	'CIMARRON - DRAPER LAKE 345KV CKT 1'	717	0.108	101.19	'MAUD - SEMINOLE 138KV CKT 1'
13WP	00NR	0	'FROM->TO'	G11_049	'CIMARRON - DRAPER LAKE 345KV CKT 1'	717	0.108	103.74	'G11-17T 345.00 - POST ROCK 345KV CKT 1'
13WP	00NR	0	'FROM->TO'	G11_049	'CIMARRON - DRAPER LAKE 345KV CKT 1'	717	0.108	103.25	'DBL-CIR-RENO'
13WP	00NR	0	'FROM->TO'	G11_049	'CIMARRON - DRAPER LAKE 345KV CKT 1'	717	0.108	103.24	'DBL-MULG-CIR'
13WP	00NR	0	'FROM->TO'	G11_049	'CIMARRON - DRAPER LAKE 345KV CKT 1'	717	0.108	103.21	'DBL-SPRVL-MU'
13WP	00NR	0	'FROM->TO'	G11_049	'CIMARRON - DRAPER LAKE 345KV CKT 1'	717	0.108	101.56	'OGE3TERM33'
13WP	00NR	0	'FROM->TO'	G11_049	'CIMARRON - DRAPER LAKE 345KV CKT 1'	717	0.108	104.11	'HORSESHOE LAKE - JONES TAP 138KV CKT 1'
13WP	00NR	0	'FROM->TO'	G11_049	'CIMARRON - DRAPER LAKE 345KV CKT 1'	717	0.108	101.64	'PENNSYLVANIA - WESTMOORE 138KV CKT 1'
13WP	00NR	0	'FROM->TO'	G11_049	'CIMARRON - DRAPER LAKE 345KV CKT 1'	717	0.108	101.46	'WESTMOORE - WILROGR4 138KV CKT 1'
13WP	00NR	0	'FROM->TO'	G11_049	'CIMARRON - DRAPER LAKE 345KV CKT 1'	717	0.108	101.69	'FOREST HILL - SQUIRL CREEK 138KV CKT 1'
13WP	00NR	0	'FROM->TO'	G11_049	'CIMARRON - DRAPER LAKE 345KV CKT 1'	717	0.108	101.36	'FOREST HILL - MAUD 138KV CKT 1'
13WP	00NR	0	'FROM->TO'	G11_049	'CIMARRON - DRAPER LAKE 345KV CKT 1'	717	0.108	103.53	'MEMORIAL - SKYLINE 138KV CKT 1'
13WP	00NR	0	'FROM->TO'	G11_049	'CIMARRON - DRAPER LAKE 345KV CKT 1'	717	0.108	101.73	'ARCADIA - OMPA-EDMOND AIR DEPOT (PLANNED 2007) 138KV CKT 1'
13WP	00NR	0	'FROM->TO'	G11_049	'CIMARRON - DRAPER LAKE 345KV CKT 1'	717	0.108	101.19	'PARK LANE - SEMINOLE 138KV CKT 1'
13WP	00NR	0	'FROM->TO'	G11_049	'CIMARRON - DRAPER LAKE 345KV CKT 1'	717	0.107	101.71	'ARBUCKLE - VANOSS 138KV CKT 1'
13WP	00NR	0	'FROM->TO'	G11_049	'CIMARRON - DRAPER LAKE 345KV CKT 1'	717	0.107	103.64	'HUGO - SUNNYSIDE 345KV CKT 1'
13WP	00NR	0	'FROM->TO'	G11_049	'CIMARRON - DRAPER LAKE 345KV CKT 1'	717	0.107	103.54	'CORN TAP - PAOLI 138KV CKT 1'
13WP	00NR	0	'FROM->TO'	G11_049	'CIMARRON - DRAPER LAKE 345KV CKT 1'	717	0.107	102.98	'CIVIT - PAOLI 138KV CKT 1'
13WP	00NR	0	'FROM->TO'	G11_049	'CIMARRON - DRAPER LAKE 345KV CKT 1'	717	0.107	102.93	'CIVIT - STRATFORD 138KV CKT 1'
13WP	00NR	0	'FROM->TO'	G11_049	'CIMARRON - DRAPER LAKE 345KV CKT 1'	717	0.107	102.87	'OIL CENTER - STRATFORD 138KV CKT 1'
13WP	00NR	0	'FROM->TO'	G11_049	'CIMARRON - DRAPER LAKE 345KV CKT 1'	717	0.107	102.80	'LATTA JCT - OIL CENTER 138KV CKT 1'
13WP	00NR	0	'FROM->TO'	G11_049	'CIMARRON - DRAPER LAKE 345KV CKT 1'	717	0.107	103.26	'SWISSVALE - WEST GARDNER 345KV CKT 1'
13WP	00NR	0	'FROM->TO'	G11_049	'CIMARRON - DRAPER LAKE 345KV CKT 1'	717	0.107	102.84	'DAYTON - MUSTANG 138KV CKT 1'
13WP	00NR	0	'FROM->TO'	G11_049	'CIMARRON - DRAPER LAKE 345KV CKT 1'	717	0.107	102.83	'DAYTON - HOBBY LOBBY 138KV CKT 1'
13WP	00NR	0	'FROM->TO'	G11_049	'CIMARRON - DRAPER LAKE 345KV CKT 1'	717	0.107	102.78	'36 & MERIDIAN - HOBBY LOBBY 138KV CKT 1'
13WP	00NR	0	'FROM->TO'	G11_049	'CIMARRON - DRAPER LAKE 345KV CKT 1'	717	0.107	103.62	'BLACKBERRY - NEOSHO 345KV CKT 1'
13WP	00NR	0	'FROM->TO'	G11_049	'CIMARRON - DRAPER LAKE 345KV CKT 1'	717	0.107	103.21	'DIVISION AVE - LAKESIDE 138KV CKT 1'
13WP	00NR	0	'FROM->TO'	G11_049	'CIMARRON - DRAPER LAKE 345KV CKT 1'	717	0.107	103.08	'HEFNER - LAKESIDE 138KV CKT 1'
13WP	00NR	0	'FROM->TO'	G11_049	'CIMARRON - DRAPER LAKE 345KV CKT 1'	717	0.107	103.35	'EMPORIA ENERGY CENTER - WICHITA 345KV CKT 1'
13WP	00NR	0	'FROM->TO'	G11_049	'CIMARRON - DRAPER LAKE 345KV CKT 1'	717	0.107	102.74	'ANADARKO - BLANCHARD 69KV CKT 1'
13WP	00NR	0	'FROM->TO'	G11_049	'CIMARRON - DRAPER LAKE 345KV CKT 1'	717	0.107	103.18	'OVERTON-TRF'
13WP	00NR	0	'FROM->TO'	G11_049	'CIMARRON - DRAPER LAKE 345KV CKT 1'	717	0.107	103.04	'KETCH - KETCH TAP 138KV CKT 1'

SEASON	GROUP	SCENARIO	DIRECTION	SOURCE	MONITORED ELEMENT	RATE B (MVA)	TDF	(%MVA) LOADING	CONTINGENCY
13WP	00NR	0	'FROM->TO'	G11_049	'CIMARRON - DRAPER LAKE 345KV CKT 1'	717	0.107	103.25	'7OVERTON 345.00 - SIBLEY 345KV CKT 1'
13WP	00NR	0	'FROM->TO'	G11_049	'CIMARRON - DRAPER LAKE 345KV CKT 1'	717	0.107	105.38	'ANDERSONCO 345.00 - LACYGNE 345KV CKT 1'
13WP	00NR	0	'FROM->TO'	G11_049	'CIMARRON - DRAPER LAKE 345KV CKT 1'	717	0.107	105.27	'ANDERSONCO 345.00 - WOLF CREEK 345KV CKT 1'
13WP	00NR	0	'FROM->TO'	G11_049	'CIMARRON - DRAPER LAKE 345KV CKT 1'	717	0.107	101.55	'DISCVRY - FOSTER 138KV CKT 1'
13WP	00NR	0	'FROM->TO'	G11_049	'CIMARRON - DRAPER LAKE 345KV CKT 1'	717	0.107	101.38	'DISCVRY - OAKCREEK 138KV CKT 1'
13WP	00NR	0	'FROM->TO'	G11_049	'CIMARRON - DRAPER LAKE 345KV CKT 1'	717	0.107	103.73	'WRTOD400'
13WP	00NR	0	'FROM->TO'	G11_049	'CIMARRON - DRAPER LAKE 345KV CKT 1'	717	0.107	102.75	'HEALDTON - LOCO 138KV CKT 1'
13WP	00NR	0	'FROM->TO'	G11_049	'CIMARRON - DRAPER LAKE 345KV CKT 1'	717	0.107	103.64	'HOYT - JEFFREY ENERGY CENTER 345KV CKT 1'
13WP	00NR	0	'FROM->TO'	G11_049	'CIMARRON - DRAPER LAKE 345KV CKT 1'	717	0.107	103.44	'HOYT - STRANGER CREEK 345KV CKT 1'
13WP	00NR	0	'FROM->TO'	G11_049	'CIMARRON - DRAPER LAKE 345KV CKT 1'	717	0.107	103.02	'COMANCHE - LOCO 138KV CKT 1'
13WP	00NR	0	'FROM->TO'	G11_049	'CIMARRON - DRAPER LAKE 345KV CKT 1'	717	0.107	101.73	'SEMINOLE - VANOSS 138KV CKT 1'
13WP	00NR	0	'FROM->TO'	G11_049	'CIMARRON - DRAPER LAKE 345KV CKT 1'	717	0.107	102.99	'EMPORIA ENERGY CENTER - SWISSVALE 345KV CKT 1'
13WP	00NR	0	'FROM->TO'	G11_049	'CIMARRON - DRAPER LAKE 345KV CKT 1'	717	0.107	102.82	'RENO COUNTY - SUMMIT 345KV CKT 1'
13WP	00NR	0	'FROM->TO'	G11_049	'CIMARRON - DRAPER LAKE 345KV CKT 1'	717	0.107	102.74	'EL RENO SW - MUSTANG 69KV CKT 1'
13WP	00NR	0	'FROM->TO'	G11_049	'CIMARRON - DRAPER LAKE 345KV CKT 1'	717	0.107	102.69	'5LOCSTGV - MAID 161KV CKT 1'
13WP	00NR	0	'FROM->TO'	G11_049	'CIMARRON - DRAPER LAKE 345KV CKT 1'	717	0.107	102.68	'5CDRCRST 161.00 - 5LOCSTGV 161KV CKT 1'
13WP	00NR	0	'FROM->TO'	G11_049	'CIMARRON - DRAPER LAKE 345KV CKT 1'	717	0.107	102.75	'PENNSYLVANIA - SANTA FE 138KV CKT 1'
13WP	00NR	0	'FROM->TO'	G11_049	'CIMARRON - DRAPER LAKE 345KV CKT 1'	717	0.107	102.96	'AXTELL - PAULINE 345KV CKT 1'
13WP	00NR	0	'FROM->TO'	G11_049	'CIMARRON - DRAPER LAKE 345KV CKT 1'	717	0.107	103.23	'HUGO - VALLIANT 345KV CKT 1'
13WP	00NR	0	'FROM->TO'	G11_049	'CIMARRON - DRAPER LAKE 345KV CKT 1'	717	0.107	103.01	'GRAND ISLAND - SWEETWATER 345KV CKT 1'
13WP	00NR	0	'FROM->TO'	G11_049	'CIMARRON - DRAPER LAKE 345KV CKT 1'	717	0.107	104.83	'REDBUD - RIVERSIDE STATION 345KV CKT 1'
13WP	00NR	0	'FROM->TO'	G11_049	'CIMARRON - DRAPER LAKE 345KV CKT 1'	717	0.107	103.08	'LONEOAK - NORTHWEST 138KV CKT 1'
13WP	00NR	0	'FROM->TO'	G11_049	'CIMARRON - DRAPER LAKE 345KV CKT 1'	717	0.107	102.94	'LONEOAK - QUAIL CREEK 138KV CKT 1'
13WP	00NR	0	'FROM->TO'	G11_049	'CIMARRON - DRAPER LAKE 345KV CKT 1'	717	0.107	102.83	'MOORE - PAULINE 345KV CKT 1'
17WP	00NR	0	'FROM->TO'	G11_049	'CIMARRON - DRAPER LAKE 345KV CKT 1'	717	0.107	103.17	'CLEVELAND - SOONER 345KV CKT 1'
13WP	00NR	0	'FROM->TO'	G11_049	'CIMARRON - DRAPER LAKE 345KV CKT 1'	717	0.107	101.40	'KEO EHV - WEST MEMPHIS 500 500KV CKT 1'
13WP	00NR	0	'FROM->TO'	G11_049	'CIMARRON - DRAPER LAKE 345KV CKT 1'	717	0.107	102.94	'DIVISION AVE - MUSTANG 138KV CKT 1'
13WP	00NR	0	'FROM->TO'	G11_049	'CIMARRON - DRAPER LAKE 345KV CKT 1'	717	0.107	102.75	'OUMED 4 - STONEWALL 138KV CKT 1'
13WP	00NR	0	'FROM->TO'	G11_049	'CIMARRON - DRAPER LAKE 345KV CKT 1'	717	0.107	102.74	'OUMED 4 - PARK PLACE 138KV CKT 1'
13WP	00NR	0	'FROM->TO'	G11_049	'CIMARRON - DRAPER LAKE 345KV CKT 1'	717	0.107	102.91	'HAMMETT TAP - HORSESHOE LAKE 138KV CKT 1'
13WP	00NR	0	'FROM->TO'	G11_049	'CIMARRON - DRAPER LAKE 345KV CKT 1'	717	0.107	101.73	'OGE3TERM41'
13WP	00NR	0	'FROM->TO'	G11_049	'CIMARRON - DRAPER LAKE 345KV CKT 1'	717	0.107	101.64	'G11_040_TAP 138.00 - POOLEVILLE 138KV CKT 1'
13WP	00NR	0	'FROM->TO'	G11_049	'CIMARRON - DRAPER LAKE 345KV CKT 1'	717	0.107	101.72	'8BHAM STEEL 500.00 - WEST MEMPHIS 500 500KV CKT 1'
13WP	00NR	0	'FROM->TO'	G11_049	'CIMARRON - DRAPER LAKE 345KV CKT 1'	717	0.107	101.71	'AMRN_OUTS5'
13WP	00NR	0	'FROM->TO'	G11_049	'CIMARRON - DRAPER LAKE 345KV CKT 1'	717	0.107	100.95	'OGE3TERM22'
13WP	00NR	0	'FROM->TO'	G11_049	'CIMARRON - DRAPER LAKE 345KV CKT 1'	717	0.107	102.59	'COUNCIL - MUSTANG 138KV CKT 1'
13WP	00NR	0	'FROM->TO'	G11_049	'CIMARRON - DRAPER LAKE 345KV CKT 1'	717	0.107	100.96	'DRAPER LAKE - SOONER TAP 138KV CKT 1'
13WP	00NR	0	'FROM->TO'	G11_049	'CIMARRON - DRAPER LAKE 345KV CKT 1'	717	0.107	103.33	'OGE3TERM17'
13WP	00NR	0	'FROM->TO'	G11_049	'CIMARRON - DRAPER LAKE 345KV CKT 1'	717	0.107	103.02	'CLEVELAND (CLVAUTO1) 345/138/13.8KV TRANSFORMER CKT 1'
13WP	00NR	0	'FROM->TO'	G11_049	'CIMARRON - DRAPER LAKE 345KV CKT 1'	717	0.107	101.38	'DELL 500 - INDEPENDENCE 500KV CKT 1'
13WP	00NR	0	'FROM->TO'	G11_049	'CIMARRON - DRAPER LAKE 345KV CKT 1'	717	0.107	102.91	'ANADARKO - GEORGIA 138KV CKT 1'
13WP	00NR	0	'FROM->TO'	G11_049	'CIMARRON - DRAPER LAKE 345KV CKT 1'	717	0.107	102.87	'FLETCHER - GEORGIA 138KV CKT 1'
13WP	00NR	0	'FROM->TO'	G11_049	'CIMARRON - DRAPER LAKE 345KV CKT 1'	717	0.107	101.58	'CANADIAN RIVER - MCALESTER SOUTH 138KV CKT 1'
13WP	00NR	0	'FROM->TO'	G11_049	'CIMARRON - DRAPER LAKE 345KV CKT 1'	717	0.107	101.57	'CANADIAN RIVER () 345/138/13.8KV TRANSFORMER CKT 1'
13WP	00NR	0	'FROM->TO'	G11_049	'CIMARRON - DRAPER LAKE 345KV CKT 1'	717	0.107	104.10	'OGE3TERM14'
13WP	00NR	0	'FROM->TO'	G11_049	'CIMARRON - DRAPER LAKE 345KV CKT 1'	717	0.107	102.96	'NORTHWEST - PANTHER 138KV CKT 1'
13WP	00NR	0	'FROM->TO'	G11_049	'CIMARRON - DRAPER LAKE 345KV CKT 1'	717	0.107	102.92	'PANTHER - SILVER LAKE 138KV CKT 1'
13WP	00NR	0	'FROM->TO'	G11_049	'CIMARRON - DRAPER LAKE 345KV CKT 1'	717	0.107	102.73	'EMPIRE - FLETCHER 138KV CKT 1'
13WP	00NR	0	'FROM->TO'	G11_049	'CIMARRON - DRAPER LAKE 345KV CKT 1'	717	0.107	102.68	'COMANCHE - EMPIRE 138KV CKT 1'
13WP	00NR	0	'FROM->TO'	G11_049	'CIMARRON - DRAPER LAKE 345KV CKT 1'	717	0.107	102.54	'HEFNER - TULSA 138KV CKT 1'
13WP	00NR	0	'FROM->TO'	G11_049	'CIMARRON - DRAPER LAKE 345KV CKT 1'	717	0.107	102.98	'OGE3TERM13'
13WP	00NR	0	'FROM->TO'	G11_049	'CIMARRON - DRAPER LAKE 345KV CKT 1'	717	0.107	102.94	'AI43'
13WP	00NR	0	'FROM->TO'	G11_049	'CIMARRON - DRAPER LAKE 345KV CKT 1'	717	0.107	102.93	'7LUTESVIL 345.00 - 7ST FRANC 345.00 345KV CKT 1'
13WP	00NR	0	'FROM->TO'	G11_049	'CIMARRON - DRAPER LAKE 345KV CKT 1'	717	0.107	102.87	'CLINTON - MONTROSE 161KV CKT 1'
13WP	00NR	0	'FROM->TO'	G11_049	'CIMARRON - DRAPER LAKE 345KV CKT 1'	717	0.107	101.71	'ARKANSAS NUCLEAR ONE - PLEASANT HILL 500KV CKT 1'
13WP	00NR	0	'FROM->TO'	G11_049	'CIMARRON - DRAPER LAKE 345KV CKT 1'	717	0.107	103.08	'OGE3TERM19'
13WP	00NR	0	'FROM->TO'	G11_049	'CIMARRON - DRAPER LAKE 345KV CKT 1'	717	0.107	102.70	'NEOSHO (NEOSHO2X) 345/161/13.8KV TRANSFORMER CKT 1'
13WP	00NR	0	'FROM->TO'	G11_049	'CIMARRON - DRAPER LAKE 345KV CKT 1'	717	0.107	101.57	'BAXTER WILSON SES - PERRYVILLE 500KV CKT 1'
13WP	00NR	0	'FROM->TO'	G11_049	'CIMARRON - DRAPER LAKE 345KV CKT 1'	717	0.107	102.73	'LAKEOVER - MCADAMS 500KV CKT 1'
13WP	00NR	0	'FROM->TO'	G11_049	'CIMARRON - DRAPER LAKE 345KV CKT 1'	717	0.107	101.68	'OSAGE - WEBB CITY TAP 138KV CKT 1'
13WP	00NR	0	'FROM->TO'	G11_049	'CIMARRON - DRAPER LAKE 345KV CKT 1'	717	0.107	101.50	'FAIRFAX TAP - WEBB CITY TAP 138KV CKT 1'
13WP	00NR	0	'FROM->TO'	G11_049	'CIMARRON - DRAPER LAKE 345KV CKT 1'	717	0.107	102.93	'WEBRE - WELLS 500KV CKT 1'
13WP	00NR	0	'FROM->TO'	G11_049	'CIMARRON - DRAPER LAKE 345KV CKT 1'	717	0.107	104.19	'OGE3TERM12'
13WP	00NR	0	'FROM->TO'	G11_049	'CIMARRON - DRAPER LAKE 345KV CKT 1'	717	0.107	100.20	'SPP-AEPW-01'
13WP	00NR	0	'FROM->TO'	G11_049	'CIMARRON - DRAPER LAKE 345KV CKT 1'	717	0.107	102.83	'OGE3TERM28'
13WP	00NR	0	'FROM->TO'	G11_049	'CIMARRON - DRAPER LAKE 345KV CKT 1'	717	0.107	102.79	'ATCHSNT3 345.00 - BOONEVILLE 345KV CKT 1'
13WP	00NR	0	'FROM->TO'	G11_049	'CIMARRON - DRAPER LAKE 345KV CKT 1'	717	0.107	102.72	'ATCHSNT3 345.00 - COOPER 345KV CKT 1'
13WP	00NR	0	'FROM->TO'	G11_049	'CIMARRON - DRAPER LAKE 345KV CKT 1'	717	0.107	103.25	'FAIRFAX TAP - SHIDLER 138KV CKT 1'
13WP	00NR	0	'FROM->TO'	G11_049	'CIMARRON - DRAPER LAKE 345KV CKT 1'	717	0.107	103.21	'SHIDLER - WEST PAWHUSKA 138KV CKT 1'
13WP	00NR	0	'FROM->TO'	G11_049	'CIMARRON - DRAPER LAKE 345KV CKT 1'	717	0.107	103.21	'PAWHUSKA TAP - WEST PAWHUSKA 138KV CKT 1'
13WP	00NR	0	'FROM->TO'	G11_049	'CIMARRON - DRAPER LAKE 345KV CKT 1'	717	0.107	103.16	'DOMES - PAWHUSKA TAP 138KV CKT 1'
13WP	00NR	0	'FROM->TO'	G11_049	'CIMARRON - DRAPER LAKE 345KV CKT 1'	717	0.107	103.13	'DOMES - MOUND ROAD 138KV CKT 1'
13WP	00NR	0	'FROM->TO'	G11_049	'CIMARRON - DRAPER LAKE 345KV CKT 1'	717	0.107	102.74	'SHERIDAN EHV - WHITE BLUFF 500KV CKT 1'
13WP	00NR	0	'FROM->TO'	G11_049	'CIMARRON - DRAPER LAKE 345KV CKT 1'	717	0.107	101.12	'LYDIA - WELSH 345KV CKT 1'
13WP	00NR	0	'FROM->TO'	G11_049	'CIMARRON - DRAPER LAKE 345KV CKT 1'	717	0.107	100.59	'LYDIA - VALLIANT 345KV CKT 1'
13WP	00NR	0	'FROM->TO'	G11_049	'CIMARRON - DRAPER LAKE 345KV CKT 1'	717	0.107	103.14	'8DANIEL 500.00 - MCKNIGHT 500KV CKT 1'
13WP	00NR	0	'FROM->TO'	G11_049	'CIMARRON - DRAPER LAKE 345KV CKT 1'	717	0.107	103.03	'DOLET HILLS - SOUTHWEST SHREVEPORT 345KV CKT 1'
13WP	00NR	0	'FROM->TO'	G11_049	'CIMARRON - DRAPER LAKE 345KV CKT 1'	717	0.107	102.98	'7JASPER 345.00 - MORGAN 345KV CKT 1'

SEASON	GROUP	SCENARIO	DIRECTION	SOURCE	MONITORED ELEMENT	RATE B (MVA)	TDF	(%MVA) LOADING	CONTINGENCY
13WP	00NR	0	'FROM->TO'	G11_049	'CIMARRON - DRAPER LAKE 345KV CKT 1'	717	0.107	101.77	'ROSE HILL - WOLF CREEK 345KV CKT 1'
13WP	00NR	0	'FROM->TO'	G11_049	'CIMARRON - DRAPER LAKE 345KV CKT 1'	717	0.107	101.77	'CROCKETT - GRIMES 345KV CKT 1'
13WP	00NR	0	'FROM->TO'	G11_049	'CIMARRON - DRAPER LAKE 345KV CKT 1'	717	0.107	101.71	'BAXTER WILSON SES - RAY BRASWELL SES 500KV CKT 1'
13WP	00NR	0	'FROM->TO'	G11_049	'CIMARRON - DRAPER LAKE 345KV CKT 1'	717	0.107	101.69	'NELSON - RICHARD 500KV CKT 1'
13WP	00NR	0	'FROM->TO'	G11_049	'CIMARRON - DRAPER LAKE 345KV CKT 1'	717	0.107	101.43	'DOLET HILLS 345/230KV TRANSFORMER CKT 1'
13WP	00NR	0	'FROM->TO'	G11_049	'CIMARRON - DRAPER LAKE 345KV CKT 1'	717	0.107	103.31	'7SAREPT 345.00 - LONGWOOD 345KV CKT 1'
13WP	00NR	0	'FROM->TO'	G11_049	'CIMARRON - DRAPER LAKE 345KV CKT 1'	717	0.107	103.30	'A222'
13WP	00NR	0	'FROM->TO'	G11_049	'CIMARRON - DRAPER LAKE 345KV CKT 1'	717	0.107	103.30	'7SAREPT 345.00 - ELDORADO EHV 345KV CKT 1'
13WP	00NR	0	'FROM->TO'	G11_049	'CIMARRON - DRAPER LAKE 345KV CKT 1'	717	0.107	103.28	'ELDORADO EHV 500/345KV TRANSFORMER CKT 1'
13WP	00NR	0	'FROM->TO'	G11_049	'CIMARRON - DRAPER LAKE 345KV CKT 1'	717	0.107	102.95	'HAMMETT TAP - HAMMETT2 138KV CKT 1'
13WP	00NR	0	'FROM->TO'	G11_049	'CIMARRON - DRAPER LAKE 345KV CKT 1'	717	0.107	102.83	'HAMMETT2 - MEEKER 138KV CKT 1'
13WP	00NR	0	'FROM->TO'	G11_049	'CIMARRON - DRAPER LAKE 345KV CKT 1'	717	0.107	101.63	'LEBROCK - TENASKA RUSK COUNTY 345KV CKT 1'
13WP	00NR	0	'FROM->TO'	G11_049	'CIMARRON - DRAPER LAKE 345KV CKT 1'	717	0.107	101.63	'CROCKETT - TENASKA RUSK COUNTY 345KV CKT 1'
13WP	00NR	0	'FROM->TO'	G11_049	'CIMARRON - DRAPER LAKE 345KV CKT 1'	717	0.107	101.47	'SPP-AEPW-04'
13WP	00NR	0	'FROM->TO'	G11_049	'CIMARRON - DRAPER LAKE 345KV CKT 1'	717	0.107	101.26	'NORTHWEST TEXARKANA - VALLIANT 345KV CKT 1'
13WP	00NR	0	'FROM->TO'	G11_049	'CIMARRON - DRAPER LAKE 345KV CKT 1'	717	0.107	102.98	'OGE3TERM3'
13WP	00NR	0	'FROM->TO'	G11_049	'CIMARRON - DRAPER LAKE 345KV CKT 1'	717	0.107	102.70	'CELE-WELLOP1'
13WP	00NR	0	'FROM->TO'	G11_049	'CIMARRON - DRAPER LAKE 345KV CKT 1'	717	0.107	101.58	'WELSH - WILKES 345KV CKT 1'
13WP	00NR	0	'FROM->TO'	G11_049	'CIMARRON - DRAPER LAKE 345KV CKT 1'	717	0.107	110.45	'GEN336821 1-GRAND GULF UNIT'
13WP	00NR	0	'FROM->TO'	G11_049	'CIMARRON - DRAPER LAKE 345KV CKT 1'	717	0.107	110.25	'GEN336153 1-WATERFORD UNIT#3'
13WP	00NR	0	'FROM->TO'	G11_049	'CIMARRON - DRAPER LAKE 345KV CKT 1'	717	0.107	109.19	'GEN337911 1-ARKANSAS NUCLEAR ONE UNIT #2'
13WP	00NR	0	'FROM->TO'	G11_049	'CIMARRON - DRAPER LAKE 345KV CKT 1'	717	0.107	109.13	'GEN335831 1-RIVERBEND UNIT#1'
13WP	00NR	0	'FROM->TO'	G11_049	'CIMARRON - DRAPER LAKE 345KV CKT 1'	717	0.107	108.27	'GEN501801 1-DOLET HILLS UNIT1'
13WP	00NR	0	'FROM->TO'	G11_049	'CIMARRON - DRAPER LAKE 345KV CKT 1'	717	0.107	108.02	'GEN337910 1-ARKANSAS NUCLEAR ONE UNIT #1'
13WP	00NR	0	'FROM->TO'	G11_049	'CIMARRON - DRAPER LAKE 345KV CKT 1'	717	0.107	107.77	'GEN520947 1-HUGO1'
13WP	00NR	0	'FROM->TO'	G11_049	'CIMARRON - DRAPER LAKE 345KV CKT 1'	717	0.107	107.17	'GEN337652 1-WHITE BLUFF UNIT #1'
13WP	00NR	0	'FROM->TO'	G11_049	'CIMARRON - DRAPER LAKE 345KV CKT 1'	717	0.107	106.95	'GEN509416 1-TURK GENERATION'
13WP	00NR	0	'FROM->TO'	G11_049	'CIMARRON - DRAPER LAKE 345KV CKT 1'	717	0.107	106.94	'GEN509403 1-PIRKEY GENERATION'
13WP	00NR	0	'FROM->TO'	G11_049	'CIMARRON - DRAPER LAKE 345KV CKT 1'	717	0.107	106.90	'GEN515042 1-SEMINOLE 3G'
13WP	00NR	0	'FROM->TO'	G11_049	'CIMARRON - DRAPER LAKE 345KV CKT 1'	717	0.107	106.82	'GEN337653 1-WHITE BLUFF UNIT #2'
13WP	00NR	0	'FROM->TO'	G11_049	'CIMARRON - DRAPER LAKE 345KV CKT 1'	717	0.107	106.75	'GEN336251 1-NINEMILE POINT UNIT#4'
13WP	00NR	0	'FROM->TO'	G11_049	'CIMARRON - DRAPER LAKE 345KV CKT 1'	717	0.107	106.70	'GEN515040 1-SEMINOLE 1G'
13WP	00NR	0	'FROM->TO'	G11_049	'CIMARRON - DRAPER LAKE 345KV CKT 1'	717	0.107	106.61	'GEN501813 1-RODEMACHER UNIT 3'
13WP	00NR	0	'FROM->TO'	G11_049	'CIMARRON - DRAPER LAKE 345KV CKT 1'	717	0.107	106.60	'GEN338146 1-INDEPENDENCE UNIT #2'
13WP	00NR	0	'FROM->TO'	G11_049	'CIMARRON - DRAPER LAKE 345KV CKT 1'	717	0.107	106.44	'GEN337041 1-GERALD ANDRUS'
13WP	00NR	0	'FROM->TO'	G11_049	'CIMARRON - DRAPER LAKE 345KV CKT 1'	717	0.107	106.43	'GEN338143 1-INDEPENDENCE UNIT #1'
13WP	00NR	0	'FROM->TO'	G11_049	'CIMARRON - DRAPER LAKE 345KV CKT 1'	717	0.107	106.30	'GEN515041 1-SEMINOLE 2G'
13WP	00NR	0	'FROM->TO'	G11_049	'CIMARRON - DRAPER LAKE 345KV CKT 1'	717	0.107	106.03	'GEN509406 1-WELSH #3'
13WP	00NR	0	'FROM->TO'	G11_049	'CIMARRON - DRAPER LAKE 345KV CKT 1'	717	0.107	106.03	'GEN509405 1-WELSH #2'
13WP	00NR	0	'FROM->TO'	G11_049	'CIMARRON - DRAPER LAKE 345KV CKT 1'	717	0.107	106.03	'GEN509404 1-WELSH #1'
13WP	00NR	0	'FROM->TO'	G11_049	'CIMARRON - DRAPER LAKE 345KV CKT 1'	717	0.107	106.02	'GEN334440 1-SABINE UNIT 4'
13WP	00NR	0	'FROM->TO'	G11_049	'CIMARRON - DRAPER LAKE 345KV CKT 1'	717	0.107	106.02	'GEN501812 1-RODEMACHER UNIT 2'
13WP	00NR	0	'FROM->TO'	G11_049	'CIMARRON - DRAPER LAKE 345KV CKT 1'	717	0.107	105.89	'GEN335206 1-NELSON UNIT 6'
13WP	00NR	0	'FROM->TO'	G11_049	'CIMARRON - DRAPER LAKE 345KV CKT 1'	717	0.107	105.77	'GEN515226 1-MUSKOGEE 6G'
13WP	00NR	0	'FROM->TO'	G11_049	'CIMARRON - DRAPER LAKE 345KV CKT 1'	717	0.107	105.69	'GEN336831 1-BAXTER WILSON SES'
13WP	00NR	0	'FROM->TO'	G11_049	'CIMARRON - DRAPER LAKE 345KV CKT 1'	717	0.107	105.56	'GEN334441 1-SABINE UNIT 5'
13WP	00NR	0	'FROM->TO'	G11_049	'CIMARRON - DRAPER LAKE 345KV CKT 1'	717	0.107	105.40	'GEN338388 1-1PLUMPT 23.000'
13WP	00NR	0	'FROM->TO'	G11_049	'CIMARRON - DRAPER LAKE 345KV CKT 1'	717	0.107	105.29	'GEN515223 1-MUSKOGEE 4G'
13WP	00NR	0	'FROM->TO'	G11_049	'CIMARRON - DRAPER LAKE 345KV CKT 1'	717	0.107	105.25	'GEN335204 1-NELSON UNIT 4'
13WP	00NR	0	'FROM->TO'	G11_049	'CIMARRON - DRAPER LAKE 345KV CKT 1'	717	0.107	105.24	'GEN515225 1-MUSKOGEE 5G'
13WP	00NR	0	'FROM->TO'	G11_049	'CIMARRON - DRAPER LAKE 345KV CKT 1'	717	0.107	105.17	'GEN334433 1-SABINE UNIT 3'
13WP	00NR	0	'FROM->TO'	G11_049	'CIMARRON - DRAPER LAKE 345KV CKT 1'	717	0.107	105.15	'GEN336801 1-BAXTER WILSON UNIT #1'
13WP	00NR	0	'FROM->TO'	G11_049	'CIMARRON - DRAPER LAKE 345KV CKT 1'	717	0.107	104.07	'GEN336170 1-GULF OXY U4'
13WP	00NR	0	'FROM->TO'	G11_049	'CIMARRON - DRAPER LAKE 345KV CKT 1'	717	0.107	103.92	'GEN334070 1-LEWIS CREEK 1'
13WP	00NR	0	'FROM->TO'	G11_049	'CIMARRON - DRAPER LAKE 345KV CKT 1'	717	0.107	103.89	'GEN334071 1-LEWIS CREEK 2'
13WP	00NR	0	'FROM->TO'	G11_049	'CIMARRON - DRAPER LAKE 345KV CKT 1'	717	0.107	103.74	'GEN300006 1-NEW MADRID UNIT 1'
13WP	00NR	0	'FROM->TO'	G11_049	'CIMARRON - DRAPER LAKE 345KV CKT 1'	717	0.107	103.72	'GEN300007 1-NEW MADRID UNIT 2'
13WP	00NR	0	'FROM->TO'	G11_049	'CIMARRON - DRAPER LAKE 345KV CKT 1'	717	0.107	103.63	'GEN509391 G1-ARSENAL HILL GENS #2 (STALL)'
13WP	00NR	0	'FROM->TO'	G11_049	'CIMARRON - DRAPER LAKE 345KV CKT 1'	717	0.107	103.63	'GEN509392 G2-ARSENAL HILL GENS #3 (STALL)'
13WP	00NR	0	'FROM->TO'	G11_049	'CIMARRON - DRAPER LAKE 345KV CKT 1'	717	0.107	103.61	'GEN334432 1-SABINE UNIT 2'
13WP	00NR	0	'FROM->TO'	G11_049	'CIMARRON - DRAPER LAKE 345KV CKT 1'	717	0.107	103.56	'GEN334030 1-FRONTIER UNIT 1'
13WP	00NR	0	'FROM->TO'	G11_049	'CIMARRON - DRAPER LAKE 345KV CKT 1'	717	0.107	103.56	'GEN334031 1-FRONTIER UNIT 2'
13WP	00NR	0	'FROM->TO'	G11_049	'CIMARRON - DRAPER LAKE 345KV CKT 1'	717	0.107	103.55	'GEN509393 S1-ARSENAL HILL GENS #4 (STALL)'
13WP	00NR	0	'FROM->TO'	G11_049	'CIMARRON - DRAPER LAKE 345KV CKT 1'	717	0.107	103.54	'GEN334431 1-SABINE UNIT 1'
13WP	00NR	0	'FROM->TO'	G11_049	'CIMARRON - DRAPER LAKE 345KV CKT 1'	717	0.107	103.54	'GEN509394 1-FLINT CREEK'
13WP	00NR	0	'FROM->TO'	G11_049	'CIMARRON - DRAPER LAKE 345KV CKT 1'	717	0.107	103.51	'GEN514998 1-MCCLAIN UNIT 1'
13WP	00NR	0	'FROM->TO'	G11_049	'CIMARRON - DRAPER LAKE 345KV CKT 1'	717	0.107	103.51	'GEN503909 1-FULTONU1 1 16.000'
13WP	00NR	0	'FROM->TO'	G11_049	'CIMARRON - DRAPER LAKE 345KV CKT 1'	717	0.107	103.50	'GEN335612 1-WILLOW GLENN UNIT#2'
13WP	00NR	0	'FROM->TO'	G11_049	'CIMARRON - DRAPER LAKE 345KV CKT 1'	717	0.107	103.50	'GEN509408 1-WILKES #2'
13WP	00NR	0	'FROM->TO'	G11_049	'CIMARRON - DRAPER LAKE 345KV CKT 1'	717	0.107	103.45	'GEN511843 1-RIVERSIDE STATION #2'
13WP	00NR	0	'FROM->TO'	G11_049	'CIMARRON - DRAPER LAKE 345KV CKT 1'	717	0.107	103.42	'GEN506752 1-LEBROCK GAS 1'
13WP	00NR	0	'FROM->TO'	G11_049	'CIMARRON - DRAPER LAKE 345KV CKT 1'	717	0.107	103.42	'GEN337429 1-PERYVILLE UNIT #2'
13WP	00NR	0	'FROM->TO'	G11_049	'CIMARRON - DRAPER LAKE 345KV CKT 1'	717	0.107	103.42	'GEN337432 1-PERYVILLE UNIT #5'
13WP	00NR	0	'FROM->TO'	G11_049	'CIMARRON - DRAPER LAKE 345KV CKT 1'	717	0.107	103.37	'GEN337428 1-PERYVILLE UNIT #1'
13WP	00NR	0	'FROM->TO'	G11_049	'CIMARRON - DRAPER LAKE 345KV CKT 1'	717	0.107	103.37	'GEN337430 1-PERYVILLE UNIT #3'
13WP	00NR	0	'FROM->TO'	G11_049	'CIMARRON - DRAPER LAKE 345KV CKT 1'	717	0.107	103.37	'GEN335075 1-DYNEGY#1'
13WP	00NR	0	'FROM->TO'	G11_049	'CIMARRON - DRAPER LAKE 345KV CKT 1'	717	0.107	103.35	'GEN335203 1-NELSON UNIT 3'
13WP	00NR	0	'FROM->TO'	G11_049	'CIMARRON - DRAPER LAKE 345KV CKT 1'	717	0.107	103.35	'GEN336167 1-GULF OXY U1'

SEASON	GROUP	SCENARIO	DIRECTION	SOURCE	MONITORED ELEMENT	RATE B (MVA)	TDF	(%MVA) LOADING	CONTINGENCY
13WP	00NR	0	'FROM->TO'	G11_049	'CIMARRON - DRAPER LAKE 345KV CKT 1'	717	0.107	103.35	'GEN336168 1-GULF OXY U2'
13WP	00NR	0	'FROM->TO'	G11_049	'CIMARRON - DRAPER LAKE 345KV CKT 1'	717	0.107	103.35	'GEN336169 1-GULF OXY U3'
13WP	00NR	0	'FROM->TO'	G11_049	'CIMARRON - DRAPER LAKE 345KV CKT 1'	717	0.107	103.34	'GEN318007 1-5MOROW161 161.00'
13WP	00NR	0	'FROM->TO'	G11_049	'CIMARRON - DRAPER LAKE 345KV CKT 1'	717	0.107	103.31	'GEN337421 1-OUCHITA CTG1'
13WP	00NR	0	'FROM->TO'	G11_049	'CIMARRON - DRAPER LAKE 345KV CKT 1'	717	0.107	103.31	'GEN337423 1-OUCHITA CTG2'
13WP	00NR	0	'FROM->TO'	G11_049	'CIMARRON - DRAPER LAKE 345KV CKT 1'	717	0.107	103.31	'GEN337425 1-OUCHITA CTG3'
13WP	00NR	0	'FROM->TO'	G11_049	'CIMARRON - DRAPER LAKE 345KV CKT 1'	717	0.107	103.31	'GEN512688 2-GRDA1 GSU2 22'
13WP	00NR	0	'FROM->TO'	G11_049	'CIMARRON - DRAPER LAKE 345KV CKT 1'	717	0.107	103.29	'GEN334392 1-EXXON MOBIL IPP 1'
13WP	00NR	0	'FROM->TO'	G11_049	'CIMARRON - DRAPER LAKE 345KV CKT 1'	717	0.107	103.22	'GEN337006 1-DUKE MCADAMS G1'
13WP	00NR	0	'FROM->TO'	G11_049	'CIMARRON - DRAPER LAKE 345KV CKT 1'	717	0.107	103.22	'GEN337007 1-DUKE MCADAMS G2'
13WP	00NR	0	'FROM->TO'	G11_049	'CIMARRON - DRAPER LAKE 345KV CKT 1'	717	0.107	103.20	'GEN512689 1-GRDA1 GSU1 22'
13WP	00NR	0	'FROM->TO'	G11_049	'CIMARRON - DRAPER LAKE 345KV CKT 1'	717	0.107	103.20	'GEN337008 1-DUKE MCADAMS S1'
13WP	00NR	0	'FROM->TO'	G11_049	'CIMARRON - DRAPER LAKE 345KV CKT 1'	717	0.107	103.18	'GEN505432 1-SIKESTON'
13WP	00NR	0	'FROM->TO'	G11_049	'CIMARRON - DRAPER LAKE 345KV CKT 1'	717	0.107	103.16	'GEN338500 1-MCCLELLAN UNIT #1'
13WP	00NR	0	'FROM->TO'	G11_049	'CIMARRON - DRAPER LAKE 345KV CKT 1'	717	0.107	103.09	'GEN515266 1-AES 1G'
13WP	00NR	0	'FROM->TO'	G11_049	'CIMARRON - DRAPER LAKE 345KV CKT 1'	717	0.107	103.09	'GEN515267 1-AES 2G'
13WP	00NR	0	'FROM->TO'	G11_049	'CIMARRON - DRAPER LAKE 345KV CKT 1'	717	0.107	103.07	'GEN335611 1-WILLOW GLENN UNIT#1'
13WP	00NR	0	'FROM->TO'	G11_049	'CIMARRON - DRAPER LAKE 345KV CKT 1'	717	0.107	103.05	'GEN511840 1-NORTHEASTERN STATION #3'
13WP	00NR	0	'FROM->TO'	G11_049	'CIMARRON - DRAPER LAKE 345KV CKT 1'	717	0.107	103.05	'GEN337954 1-LYNCH UNIT #3'
13WP	00NR	0	'FROM->TO'	G11_049	'CIMARRON - DRAPER LAKE 345KV CKT 1'	717	0.107	103.03	'GEN511841 1-NORTHEASTERN STATION #4'
13WP	00NR	0	'FROM->TO'	G11_049	'CIMARRON - DRAPER LAKE 345KV CKT 1'	717	0.107	103.02	'GEN335201 1-NELSON UNIT 1'
13WP	00NR	0	'FROM->TO'	G11_049	'CIMARRON - DRAPER LAKE 345KV CKT 1'	717	0.107	103.01	'GEN511938 1-OEC STEAM # 1'
13WP	00NR	0	'FROM->TO'	G11_049	'CIMARRON - DRAPER LAKE 345KV CKT 1'	717	0.107	103.01	'GEN511839 1-NORTHEASTERN STATION #2'
13WP	00NR	0	'FROM->TO'	G11_049	'CIMARRON - DRAPER LAKE 345KV CKT 1'	717	0.107	103.01	'GEN335202 1-NELSON UNIT 2'
13WP	00NR	0	'FROM->TO'	G11_049	'CIMARRON - DRAPER LAKE 345KV CKT 1'	717	0.107	102.99	'GEN336944 1-REX BROWN'
13WP	00NR	0	'FROM->TO'	G11_049	'CIMARRON - DRAPER LAKE 345KV CKT 1'	717	0.107	102.96	'GEN506749 1-EASTMAN GENERATION A'
13WP	00NR	0	'FROM->TO'	G11_049	'CIMARRON - DRAPER LAKE 345KV CKT 1'	717	0.107	102.92	'GEN337422 1-OUCHITA STG1'
13WP	00NR	0	'FROM->TO'	G11_049	'CIMARRON - DRAPER LAKE 345KV CKT 1'	717	0.107	102.92	'GEN337424 1-OUCHITA STG2'
13WP	00NR	0	'FROM->TO'	G11_049	'CIMARRON - DRAPER LAKE 345KV CKT 1'	717	0.107	102.92	'GEN337426 1-OUCHITA STG3'
13WP	00NR	0	'FROM->TO'	G11_049	'CIMARRON - DRAPER LAKE 345KV CKT 1'	717	0.107	102.91	'GEN511842 1-RIVERSIDE STATION #1'
13WP	00NR	0	'FROM->TO'	G11_049	'CIMARRON - DRAPER LAKE 345KV CKT 1'	717	0.107	102.89	'GEN335137 C4-PPG'
13WP	00NR	0	'FROM->TO'	G11_049	'CIMARRON - DRAPER LAKE 345KV CKT 1'	717	0.107	102.89	'GEN338510 1-1S1KNWRI'
13WP	00NR	0	'FROM->TO'	G11_049	'CIMARRON - DRAPER LAKE 345KV CKT 1'	717	0.107	102.89	'GEN338511 1-1C7KNWRI'
13WP	00NR	0	'FROM->TO'	G11_049	'CIMARRON - DRAPER LAKE 345KV CKT 1'	717	0.107	102.87	'GEN338513 1-BAILEY UNIT #1'
13WP	00NR	0	'FROM->TO'	G11_049	'CIMARRON - DRAPER LAKE 345KV CKT 1'	717	0.107	102.82	'GEN500915 3-WESTERN KRAFT'
13WP	00NR	0	'FROM->TO'	G11_049	'CIMARRON - DRAPER LAKE 345KV CKT 1'	717	0.107	102.81	'GEN300015 1-1SGPDEL 18.000'
13WP	00NR	0	'FROM->TO'	G11_049	'CIMARRON - DRAPER LAKE 345KV CKT 1'	717	0.107	102.81	'GEN300016 1-1G1GPDEL 18.000'
13WP	00NR	0	'FROM->TO'	G11_049	'CIMARRON - DRAPER LAKE 345KV CKT 1'	717	0.107	102.81	'GEN300017 1-1G2GPDEL 18.000'
13WP	00NR	0	'FROM->TO'	G11_049	'CIMARRON - DRAPER LAKE 345KV CKT 1'	717	0.107	102.80	'GEN501910 1-ACADIA UNIT ST1'
13WP	00NR	0	'FROM->TO'	G11_049	'CIMARRON - DRAPER LAKE 345KV CKT 1'	717	0.107	102.79	'GEN334467 1-DUPONT UNIT#1'
13WP	00NR	0	'FROM->TO'	G11_049	'CIMARRON - DRAPER LAKE 345KV CKT 1'	717	0.107	102.79	'GEN503900 1-FITZHUGH CT1'
13WP	00NR	0	'FROM->TO'	G11_049	'CIMARRON - DRAPER LAKE 345KV CKT 1'	717	0.107	102.79	'GEN334335 1-TOLEDO BEND'
13WP	00NR	0	'FROM->TO'	G11_049	'CIMARRON - DRAPER LAKE 345KV CKT 1'	717	0.107	102.77	'GEN335546 3-DOW COGEN'
13WP	00NR	0	'FROM->TO'	G11_049	'CIMARRON - DRAPER LAKE 345KV CKT 1'	717	0.107	102.77	'GEN337124 5-LS POWER BATESVILLE'
13WP	00NR	0	'FROM->TO'	G11_049	'CIMARRON - DRAPER LAKE 345KV CKT 1'	717	0.107	102.76	'GEN318008 3-5MOSEL161 161.00'
13WP	00NR	0	'FROM->TO'	G11_049	'CIMARRON - DRAPER LAKE 345KV CKT 1'	717	0.107	102.75	'A059'
13WP	00NR	0	'FROM->TO'	G11_049	'CIMARRON - DRAPER LAKE 345KV CKT 1'	717	0.107	102.75	'EUREKA SPRIN'
13WP	00NR	0	'FROM->TO'	G11_049	'CIMARRON - DRAPER LAKE 345KV CKT 1'	717	0.107	102.74	'GEN336176 1-UNION CARBIDE COGEN GT1'
13WP	00NR	0	'FROM->TO'	G11_049	'CIMARRON - DRAPER LAKE 345KV CKT 1'	717	0.107	102.74	'GEN336177 1-UNION CARBIDE COGEN GT2'
13WP	00NR	0	'FROM->TO'	G11_049	'CIMARRON - DRAPER LAKE 345KV CKT 1'	717	0.107	102.71	'GEN509409 1-WILKES #3'
13WP	00NR	0	'FROM->TO'	G11_049	'CIMARRON - DRAPER LAKE 345KV CKT 1'	717	0.107	102.65	'GEN300003 1-THOMAS HILL UNIT 3'
13WP	00NR	0	'FROM->TO'	G11_049	'CIMARRON - DRAPER LAKE 345KV CKT 1'	717	0.107	102.23	'BASE CASE'
13WP	00NR	0	'FROM->TO'	G11_049	'CIMARRON - DRAPER LAKE 345KV CKT 1'	717	0.107	101.76	'GEN532663 1-LAWRENCE ENERGY CENTER UNIT 5'
13WP	00NR	0	'FROM->TO'	G11_049	'CIMARRON - DRAPER LAKE 345KV CKT 1'	717	0.107	101.73	'GEN542956 2-LACYGNE UNIT #2'
13WP	00NR	0	'FROM->TO'	G11_049	'CIMARRON - DRAPER LAKE 345KV CKT 1'	717	0.107	101.71	'GEN542955 1-LACYGNE UNIT #1'
13WP	00NR	0	'FROM->TO'	G11_049	'CIMARRON - DRAPER LAKE 345KV CKT 1'	717	0.107	101.64	'DRAPER LAKE - DRPCAPS4 138.00 138KV CKT 1'
13WP	00NR	0	'FROM->TO'	G11_049	'CIMARRON - DRAPER LAKE 345KV CKT 1'	717	0.107	101.50	'GEN523462 1-BLACKHAWK GEN #2'
13WP	00NR	0	'FROM->TO'	G11_049	'CIMARRON - DRAPER LAKE 345KV CKT 1'	717	0.107	101.50	'GEN523461 1-BLACKHAWK GEN #1'
13WP	00NR	0	'FROM->TO'	G11_049	'CIMARRON - DRAPER LAKE 345KV CKT 1'	717	0.107	101.28	'GEN527165 1-Mustang Gen #5'
13WP	00NR	0	'FROM->TO'	G11_049	'CIMARRON - DRAPER LAKE 345KV CKT 1'	717	0.107	101.28	'GEN527164 1-MUSTANG GEN #4 22 KV'
13WP	00NR	0	'FROM->TO'	G11_049	'CIMARRON - DRAPER LAKE 345KV CKT 1'	717	0.107	101.27	'GEN532653 1-JEFFREY ENERGY CENTER UNIT 3'
13WP	00NR	0	'FROM->TO'	G11_049	'CIMARRON - DRAPER LAKE 345KV CKT 1'	717	0.107	101.26	'GEN527901 1-HOBBS PLANT #1 (CT)'
13WP	00NR	0	'FROM->TO'	G11_049	'CIMARRON - DRAPER LAKE 345KV CKT 1'	717	0.107	101.26	'GEN527902 1-HOBBS PLANT #2 (CT)'
13WP	00NR	0	'FROM->TO'	G11_049	'CIMARRON - DRAPER LAKE 345KV CKT 1'	717	0.107	101.25	'GEN532651 1-JEFFREY ENERGY CENTER UNIT 1'
13WP	00NR	0	'FROM->TO'	G11_049	'CIMARRON - DRAPER LAKE 345KV CKT 1'	717	0.107	101.23	'GEN532652 1-JEFFREY ENERGY CENTER UNIT 2'
13WP	00NR	0	'FROM->TO'	G11_049	'CIMARRON - DRAPER LAKE 345KV CKT 1'	717	0.107	101.22	'GEN527163 1-MUSTANG GEN #3 22 KV'
13WP	00NR	0	'FROM->TO'	G11_049	'CIMARRON - DRAPER LAKE 345KV CKT 1'	717	0.107	101.20	'GEN527161 1-MUSTANG GEN #1'
13WP	00NR	0	'FROM->TO'	G11_049	'CIMARRON - DRAPER LAKE 345KV CKT 1'	717	0.107	101.19	'GEN527162 1-MUSTANG GEN #2'
13WP	00NR	0	'FROM->TO'	G11_049	'CIMARRON - DRAPER LAKE 345KV CKT 1'	717	0.107	101.13	'GEN520997 1-MORLND2'
13WP	00NR	0	'FROM->TO'	G11_049	'CIMARRON - DRAPER LAKE 345KV CKT 1'	717	0.107	101.06	'GEN520998 1-MORLND3'
13WP	00NR	0	'FROM->TO'	G11_049	'CIMARRON - DRAPER LAKE 345KV CKT 1'	717	0.107	101.03	'GEN527903 1-HOBBS PLANT #3 (ST)'
13WP	00NR	0	'FROM->TO'	G11_049	'CIMARRON - DRAPER LAKE 345KV CKT 1'	717	0.107	100.80	'GEN526333 1-JONES GEN #3 21 KV'
13WP	00NR	0	'FROM->TO'	G11_049	'CIMARRON - DRAPER LAKE 345KV CKT 1'	717	0.107	100.80	'GEN526334 1-JONES_4 116.500'
13WP	00NR	0	'FROM->TO'	G11_049	'CIMARRON - DRAPER LAKE 345KV CKT 1'	717	0.107	100.43	'GEN531447 1-HOLCOMB GENERATOR'
13WP	00NR	0	'FROM->TO'	G11_049	'CIMARRON - DRAPER LAKE 345KV CKT 1'	717	0.107	100.34	'GEN514805 1-SOONER UNIT 1'
13WP	00NR	0	'FROM->TO'	G11_049	'CIMARRON - DRAPER LAKE 345KV CKT 1'	717	0.107	100.06	'GEN525561 1-TOLK GEN #1 24 KV'
13WP	00NR	0	'FROM->TO'	G11_049	'CIMARRON - DRAPER LAKE 345KV CKT 1'	717	0.107	100.00	'GEN514806 1-SOONER UNIT 2'
13WP	00NR	0	'FROM->TO'	G11_049	'CIMARRON - DRAPER LAKE 345KV CKT 1'	717	0.107	103.98	'OGE3TERM47'

SEASON	GROUP	SCENARIO	DIRECTION	SOURCE	MONITORED ELEMENT	RATE B (MVA)	TDF	(%MVA) LOADING	CONTINGENCY
13WP	00NR	0	'FROM->TO'	G11_049	'CIMARRON - DRAPER LAKE 345KV CKT 1'	717	0.107	102.95	'GRDA-OPGD-05'
13WP	00NR	0	'FROM->TO'	G11_049	'CIMARRON - DRAPER LAKE 345KV CKT 1'	717	0.107	102.97	'7JASPER 345.00 - BLACKBERRY 345KV CKT 1'
13WP	00NR	0	'FROM->TO'	G11_049	'CIMARRON - DRAPER LAKE 345KV CKT 1'	717	0.107	101.49	'FIXICO TAP - MAUD 138KV CKT 1'
13WP	00NR	0	'FROM->TO'	G11_049	'CIMARRON - DRAPER LAKE 345KV CKT 1'	717	0.107	102.98	'ELDORADO EHV - SHERIDAN EHV 500KV CKT 1'
13WP	00NR	0	'FROM->TO'	G11_049	'CIMARRON - DRAPER LAKE 345KV CKT 1'	717	0.107	102.75	'EL RENO - ROMAN NOSE 138KV CKT 1'
13WP	00NR	0	'FROM->TO'	G11_049	'CIMARRON - DRAPER LAKE 345KV CKT 1'	717	0.107	102.72	'ROMAN NOSE - SOUTHARD 138KV CKT 1'
13WP	00NR	0	'FROM->TO'	G11_049	'CIMARRON - DRAPER LAKE 345KV CKT 1'	717	0.107	101.78	'FIXICO TAP - WELEETKA 138KV CKT 1'
13WP	00NR	0	'FROM->TO'	G11_049	'CIMARRON - DRAPER LAKE 345KV CKT 1'	717	0.107	101.57	'DBL-CLRK-G11'
13WP	00NR	0	'FROM->TO'	G11_049	'CIMARRON - DRAPER LAKE 345KV CKT 1'	717	0.107	101.54	'OGE3TERM36'
13WP	00NR	0	'FROM->TO'	G11_049	'CIMARRON - DRAPER LAKE 345KV CKT 1'	717	0.107	101.14	'DBL-THIS-CLR'
13WP	00NR	0	'FROM->TO'	G11_049	'CIMARRON - DRAPER LAKE 345KV CKT 1'	717	0.107	102.81	'CHERRY CREEK - PLEASANT VALLEY 138KV CKT 1'
13WP	00NR	0	'FROM->TO'	G11_049	'CIMARRON - DRAPER LAKE 345KV CKT 1'	717	0.107	102.68	'BOYD - CHERRY CREEK 138KV CKT 1'
13WP	00NR	0	'FROM->TO'	G11_049	'CIMARRON - DRAPER LAKE 345KV CKT 1'	717	0.107	103.93	'MORISNT4 138.00 - STILLWATER 138KV CKT 1'
13WP	00NR	0	'FROM->TO'	G11_049	'CIMARRON - DRAPER LAKE 345KV CKT 1'	717	0.107	103.24	'MCELROY - STILLWATER 138KV CKT 1'
13WP	00NR	0	'FROM->TO'	G11_049	'CIMARRON - DRAPER LAKE 345KV CKT 1'	717	0.107	102.99	'KINZE - MCELROY 138KV CKT 1'
13WP	00NR	0	'FROM->TO'	G11_049	'CIMARRON - DRAPER LAKE 345KV CKT 1'	717	0.107	102.60	'MORISNT4 138.00 - SOONER 138KV CKT 1'
13WP	00NR	0	'FROM->TO'	G11_049	'CIMARRON - DRAPER LAKE 345KV CKT 1'	717	0.107	101.56	'HOLLYWOOD - MIDWEST TAP 138KV CKT 1'
13WP	00NR	0	'FROM->TO'	G11_049	'CIMARRON - DRAPER LAKE 345KV CKT 1'	717	0.107	102.98	'GRACEMONT (BANK 1) 345/138/13.8KV TRANSFORMER CKT 1'
13WP	00NR	0	'FROM->TO'	G11_049	'CIMARRON - DRAPER LAKE 345KV CKT 1'	717	0.107	101.81	'RENO COUNTY - WICHITA 345KV CKT 1'
13WP	00NR	0	'FROM->TO'	G11_049	'CIMARRON - DRAPER LAKE 345KV CKT 1'	717	0.107	101.26	'SEMINOLE (SEMINOL2) 345/138/14.4KV TRANSFORMER CKT 1'
13WP	00NR	0	'FROM->TO'	G11_049	'CIMARRON - DRAPER LAKE 345KV CKT 1'	717	0.107	101.25	'SEMINOLE (SEMINOL1) 345/138/14.4KV TRANSFORMER CKT 1'
13WP	00NR	0	'FROM->TO'	G11_049	'CIMARRON - DRAPER LAKE 345KV CKT 1'	717	0.106	102.95	'ARCADIA - OMPA-EDMOND GARBER(LAKE) 138KV CKT 1'
13WP	00NR	0	'FROM->TO'	G11_049	'CIMARRON - DRAPER LAKE 345KV CKT 1'	717	0.106	102.88	'CHITWOOD - OMPA-EDMOND GARBER(LAKE) 138KV CKT 1'
13WP	00NR	0	'FROM->TO'	G11_049	'CIMARRON - DRAPER LAKE 345KV CKT 1'	717	0.106	102.86	'CHITWOOD - JONES TAP 138KV CKT 1'
13WP	00NR	0	'FROM->TO'	G11_049	'CIMARRON - DRAPER LAKE 345KV CKT 1'	717	0.106	104.00	'ARCADIA - KAMO MEMORIAL 138KV CKT 1'
13WP	00NR	0	'FROM->TO'	G11_049	'CIMARRON - DRAPER LAKE 345KV CKT 1'	717	0.106	101.09	'BEAVER CO 345.00 - WOODWARD DISTRICT EHV 345KV CKT 1'
13WP	00NR	0	'FROM->TO'	G11_049	'CIMARRON - DRAPER LAKE 345KV CKT 1'	717	0.106	101.09	'FRANKLIN - PINK SW 138KV CKT 1'
13WP	00NR	0	'FROM->TO'	G11_049	'CIMARRON - DRAPER LAKE 345KV CKT 1'	717	0.106	100.81	'FRANKLIN - FRANKLIN SW 138KV CKT 1'
13WP	00NR	0	'FROM->TO'	G11_049	'CIMARRON - DRAPER LAKE 345KV CKT 1'	717	0.106	102.80	'WOODRING (WOODRNG2) 345/138/13.8KV TRANSFORMER CKT 1'
13WP	00NR	0	'FROM->TO'	G11_049	'CIMARRON - DRAPER LAKE 345KV CKT 1'	717	0.106	103.68	'HORSESHOE LAKE - KAMO MEMORIAL 138KV CKT 1'
13WP	00NR	0	'FROM->TO'	G11_049	'CIMARRON - DRAPER LAKE 345KV CKT 1'	717	0.106	103.07	'HOLLYWOOD - PLEASANT VALLEY 138KV CKT 1'
13WP	00NR	0	'FROM->TO'	G11_049	'CIMARRON - DRAPER LAKE 345KV CKT 1'	717	0.106	103.97	'MCCLAIN - PLEASANT VALLEY 138KV CKT 1'
13WP	00NR	0	'FROM->TO'	G11_049	'CIMARRON - DRAPER LAKE 345KV CKT 1'	717	0.106	101.76	'Hitchland Interchange - WOODWARD DISTRICT EHV 345KV CKT 2'
17WP	00NR	0	'FROM->TO'	G11_049	'CIMARRON - DRAPER LAKE 345KV CKT 1'	717	0.106	104.31	'ARCADIA - HORSESHOE LAKE 345KV CKT 1'
17WP	00NR	0	'FROM->TO'	G11_049	'CIMARRON - DRAPER LAKE 345KV CKT 1'	717	0.106	104.31	'HORSESHOE LAKE - SEMINOLE 345KV CKT 1'
13WP	00NR	0	'FROM->TO'	G11_049	'CIMARRON - DRAPER LAKE 345KV CKT 1'	717	0.105	101.50	'DBL-HTCH-BVR'
17WP	00NR	0	'FROM->TO'	G11_049	'CIMARRON - DRAPER LAKE 345KV CKT 1'	717	0.104	101.05	'GEN336821 1-GRAND GULF UNIT'
17WP	00NR	0	'FROM->TO'	G11_049	'CIMARRON - DRAPER LAKE 345KV CKT 1'	717	0.104	100.72	'GEN336153 1-WATERFORD UNIT#3'
13WP	00NR	0	'FROM->TO'	G11_049	'CIMARRON - DRAPER LAKE 345KV CKT 1'	717	0.104	103.60	'CANADIAN RIVER - MUSKOGEE 345KV CKT 1'
13WP	00NR	0	'FROM->TO'	G11_049	'CIMARRON - DRAPER LAKE 345KV CKT 1'	717	0.103	100.16	'G08-13T 345.00 - SUMNERCO 345.00 345KV CKT 1'
13WP	00NR	0	'FROM->TO'	G11_049	'CIMARRON - DRAPER LAKE 345KV CKT 1'	717	0.102	100.00	'DRAPER LAKE - SEMINOLE 345KV CKT 3'
13WP	00NR	0	'FROM->TO'	G11_049	'CIMARRON - DRAPER LAKE 345KV CKT 1'	717	0.098	101.74	'BORDER 7345.00 - WOODWARD DISTRICT EHV 345KV CKT 1'
13WP	00NR	0	'FROM->TO'	G11_049	'CIMARRON - DRAPER LAKE 345KV CKT 1'	717	0.093	103.82	'GRACEMONT - MINCO 345KV CKT 1'
13WP	00NR	0	'FROM->TO'	G11_049	'CIMARRON - DRAPER LAKE 345KV CKT 1'	717	0.093	103.28	'CIMARRON - MINCO 345KV CKT 1'
13WP	00NR	0	'FROM->TO'	G11_049	'ELK CITY 230KV (ELKCTY-6) 230/138/13.8KV TRANSFORMER CKT 1'	287	0.065	102.22	'BORDER 7345.00 - WOODWARD DISTRICT EHV 345KV CKT 1'
13WP	00NR	0	'FROM->TO'	G11_049	'ELK CITY 230KV (ELKCTY-6) 230/138/13.8KV TRANSFORMER CKT 1'	287	0.065	101.73	'BORDER 7345.00 - WOODWARD DISTRICT EHV 345KV CKT 1'
12WP	00NR	0	'FROM->TO'	G11_049	'ELK CITY 230KV (ELKCTY-6) 230/138/13.8KV TRANSFORMER CKT 1'	287	0.064	103.57	'BORDER 7345.00 - WOODWARD DISTRICT EHV 345KV CKT 1'
12WP	00NR	0	'FROM->TO'	G11_049	'ELK CITY 230KV (ELKCTY-6) 230/138/13.8KV TRANSFORMER CKT 1'	287	0.064	103.03	'BORDER 7345.00 - WOODWARD DISTRICT EHV 345KV CKT 1'
12G	03ALL2	0		G11_049	NCONV-Blown Up	0	0.062	9999.00	'DBL-CIR-RENO'
12G	03ALL2	0		G11_049	NCONV-Iteration Limit	0	0.062	9999.00	'DBL-MULG-CIR'
12G	03ALL2	0		G11_049	NCONV-Iteration Limit	0	0.062	9999.00	'DBL-SPRVL-MU'
12G	03ALL	0		G11_049	NCONV-Blown Up	0	0.062	9999.00	'DBL-CIR-RENO'
12G	03ALL	0		G11_049	NCONV-Iteration Limit	0	0.062	9999.00	'DBL-MULG-CIR'
12G	03ALL	0		G11_049	NCONV-Iteration Limit	0	0.062	9999.00	'DBL-SPRVL-MU'
17WP	00NR	0	'FROM->TO'	G11_049	'ELK CITY 230KV (ELKCTY-6) 230/138/13.8KV TRANSFORMER CKT 1'	287	0.056	112.49	'LAWTON EASTSIDE - OKLAUNION 345KV CKT 1'
17WP	00NR	0	'FROM->TO'	G11_049	'ELK CITY 230KV (ELKCTY-6) 230/138/13.8KV TRANSFORMER CKT 1'	287	0.056	111.60	'LAWTON EASTSIDE - OKLAUNION 345KV CKT 1'
12WP	00NR	0	'FROM->TO'	G11_049	'ELK CITY 230KV (ELKCTY-6) 230/138/13.8KV TRANSFORMER CKT 1'	287	0.056	126.49	'LAWTON EASTSIDE - OKLAUNION 345KV CKT 1'
12WP	00NR	0	'FROM->TO'	G11_049	'ELK CITY 230KV (ELKCTY-6) 230/138/13.8KV TRANSFORMER CKT 1'	287	0.056	124.79	'LAWTON EASTSIDE - OKLAUNION 345KV CKT 1'
12WP	00NR	0	'FROM->TO'	G11_049	'ELK CITY 230KV (ELKCTY-6) 230/138/13.8KV TRANSFORMER CKT 1'	287	0.056	117.55	'G05-15T 345.00 - OKLAUNION 345KV CKT 1'
12WP	00NR	0	'FROM->TO'	G11_049	'ELK CITY 230KV (ELKCTY-6) 230/138/13.8KV TRANSFORMER CKT 1'	287	0.056	117.00	'G05-15T 345.00 - TUCO INTERCHANGE 345KV CKT 1'
12WP	00NR	0	'FROM->TO'	G11_049	'ELK CITY 230KV (ELKCTY-6) 230/138/13.8KV TRANSFORMER CKT 1'	287	0.056	116.42	'G05-15T 345.00 - OKLAUNION 345KV CKT 1'
12WP	00NR	0	'FROM->TO'	G11_049	'ELK CITY 230KV (ELKCTY-6) 230/138/13.8KV TRANSFORMER CKT 1'	287	0.056	115.89	'G05-15T 345.00 - TUCO INTERCHANGE 345KV CKT 1'
12WP	00NR	0	'FROM->TO'	G11_049	'GRAPEVINE INTERCHANGE - STATELINE INTERCHANGE 230KV CKT 1'	361	0.056	111.06	'LAWTON EASTSIDE - OKLAUNION 345KV CKT 1'
12WP	00NR	0	'FROM->TO'	G11_049	'GRAPEVINE INTERCHANGE - STATELINE INTERCHANGE 230KV CKT 1'	361	0.056	101.43	'G05-15T 345.00 - OKLAUNION 345KV CKT 1'
12WP	00NR	0	'FROM->TO'	G11_049	'GRAPEVINE INTERCHANGE - STATELINE INTERCHANGE 230KV CKT 1'	361	0.056	100.84	'G05-15T 345.00 - TUCO INTERCHANGE 345KV CKT 1'
13WP	00NR	0	'FROM->TO'	G11_049	'ELK CITY 230KV (ELKCTY-6) 230/138/13.8KV TRANSFORMER CKT 1'	287	0.056	125.06	'LAWTON EASTSIDE - OKLAUNION 345KV CKT 1'
13WP	00NR	0	'FROM->TO'	G11_049	'ELK CITY 230KV (ELKCTY-6) 230/138/13.8KV TRANSFORMER CKT 1'	287	0.056	123.45	'LAWTON EASTSIDE - OKLAUNION 345KV CKT 1'
13WP	00NR	0	'FROM->TO'	G11_049	'ELK CITY 230KV (ELKCTY-6) 230/138/13.8KV TRANSFORMER CKT 1'	287	0.056	116.14	'G05-15T 345.00 - OKLAUNION 345KV CKT 1'
13WP	00NR	0	'FROM->TO'	G11_049	'ELK CITY 230KV (ELKCTY-6) 230/138/13.8KV TRANSFORMER CKT 1'	287	0.056	115.59	'G05-15T 345.00 - TUCO INTERCHANGE 345KV CKT 1'
13WP	00NR	0	'FROM->TO'	G11_049	'ELK CITY 230KV (ELKCTY-6) 230/138/13.8KV TRANSFORMER CKT 1'	287	0.056	115.07	'G05-15T 345.00 - OKLAUNION 345KV CKT 1'
13WP	00NR	0	'FROM->TO'	G11_049	'ELK CITY 230KV (ELKCTY-6) 230/138/13.8KV TRANSFORMER CKT 1'	287	0.056	114.55	'G05-15T 345.00 - TUCO INTERCHANGE 345KV CKT 1'
13WP	00NR	0	'FROM->TO'	G11_049	'GRAPEVINE INTERCHANGE - STATELINE INTERCHANGE 230KV CKT 1'	361	0.056	109.65	'LAWTON EASTSIDE - OKLAUNION 345KV CKT 1'
13WP	00NR	0	'FROM->TO'	G11_049	'GRAPEVINE INTERCHANGE - STATELINE INTERCHANGE 230KV CKT 1'	361	0.056	100.14	'G05-15T 345.00 - OKLAUNION 345KV CKT 1'
12WP	00NR	0	'FROM->TO'	G11_049	'CLEO CORNER - MEN TAP 138KV CKT 1'	191	0.051	130.62	'DBL-MATT-TAT'
12WP	00NR	0	'FROM->TO'	G11_049	'CLEO CORNER - MEN TAP 138KV CKT 1'	191	0.051	116.14	'G11_051T 345.00 - TATONGA7 345.00 345KV CKT 1'
12WP	00NR	0	'FROM->TO'	G11_049	'CLEO CORNER - MEN TAP 138KV CKT 1'	191	0.051	112.64	'G11_051T 345.00 - WOODWARD DISTRICT EHV 345KV CKT 1'
13WP	00NR	0	'FROM->TO'	G11_049	'ELK CITY 230KV (ELKCTY-6) 230/138/13.8KV TRANSFORMER CKT 1'	287	0.051	105.54	'DBL-HTCH-BVR'
13WP	00NR	0	'FROM->TO'	G11_049	'ELK CITY 230KV (ELKCTY-6) 230/138/13.8KV TRANSFORMER CKT 1'	287	0.051	104.92	'DBL-HTCH-BVR'

SEASON	GROUP	SCENARIO	DIRECTION	SOURCE	MONITORED ELEMENT	RATE B (MVA)	TDF	(%MVA) LOADING	CONTINGENCY
13WP	00NR	0	'FROM->TO'	G11_049	'CLEO CORNER - MEN TAP 138KV CKT 1'	191	0.051	127.83	'DBL-MATT-TAT'
13WP	00NR	0	'FROM->TO'	G11_049	'CLEO CORNER - MEN TAP 138KV CKT 1'	191	0.051	114.53	'G11_051T 345.00 - TATONGA7 345.00 345KV CKT 1'
13WP	00NR	0	'FROM->TO'	G11_049	'CLEO CORNER - MEN TAP 138KV CKT 1'	191	0.051	111.38	'G11_051T 345.00 - WOODWARD DISTRICT EHV 345KV CKT 1'
17WP	00NR	0	'FROM->TO'	G11_049	'CLEO CORNER - MEN TAP 138KV CKT 1'	191	0.051	121.19	'DBL-MATT-TAT'
17WP	00NR	0	'FROM->TO'	G11_049	'CLEO CORNER - MEN TAP 138KV CKT 1'	191	0.051	108.47	'G11_051T 345.00 - TATONGA7 345.00 345KV CKT 1'
17WP	00NR	0	'FROM->TO'	G11_049	'CLEO CORNER - MEN TAP 138KV CKT 1'	191	0.051	105.19	'G11_051T 345.00 - WOODWARD DISTRICT EHV 345KV CKT 1'
12SP	00NR	0	'FROM->TO'	G11_049	'CLEO CORNER - MEN TAP 138KV CKT 1'	191	0.051	106.90	'DBL-MATT-TAT'
13SP	00NR	0	'FROM->TO'	G11_049	'CLEO CORNER - MEN TAP 138KV CKT 1'	191	0.050	105.80	'DBL-MATT-TAT'
17WP	00NR	0	'FROM->TO'	G11_049	'ELK CITY 230KV (ELKCTY-6) 230/138/13.8KV TRANSFORMER CKT 1'	287	0.050	104.59	'DBL-MATT-TAT'
17WP	00NR	0	'FROM->TO'	G11_049	'ELK CITY 230KV (ELKCTY-6) 230/138/13.8KV TRANSFORMER CKT 1'	287	0.050	104.35	'DBL-MATT-TAT'
12WP	00NR	0	'FROM->TO'	G11_049	'ELK CITY 230KV (ELKCTY-6) 230/138/13.8KV TRANSFORMER CKT 1'	287	0.050	117.85	'DBL-MATT-TAT'
12WP	00NR	0	'FROM->TO'	G11_049	'ELK CITY 230KV (ELKCTY-6) 230/138/13.8KV TRANSFORMER CKT 1'	287	0.050	117.17	'DBL-MATT-TAT'
12WP	00NR	0	'FROM->TO'	G11_049	'ELK CITY 230KV (ELKCTY-6) 230/138/13.8KV TRANSFORMER CKT 1'	287	0.050	112.05	'G11_051T 345.00 - TATONGA7 345.00 345KV CKT 1'
12WP	00NR	0	'FROM->TO'	G11_049	'ELK CITY 230KV (ELKCTY-6) 230/138/13.8KV TRANSFORMER CKT 1'	287	0.050	111.42	'G11_051T 345.00 - TATONGA7 345.00 345KV CKT 1'
12WP	00NR	0	'FROM->TO'	G11_049	'ELK CITY 230KV (ELKCTY-6) 230/138/13.8KV TRANSFORMER CKT 1'	287	0.050	110.30	'G11_051T 345.00 - WOODWARD DISTRICT EHV 345KV CKT 1'
12WP	00NR	0	'FROM->TO'	G11_049	'ELK CITY 230KV (ELKCTY-6) 230/138/13.8KV TRANSFORMER CKT 1'	287	0.050	109.77	'G11_051T 345.00 - WOODWARD DISTRICT EHV 345KV CKT 1'
12WP	00NR	0	'FROM->TO'	G11_049	'GRAPEVINE INTERCHANGE - STATELINE INTERCHANGE 230KV CKT 1'	361	0.050	103.29	'DBL-MATT-TAT'
13WP	00NR	0	'FROM->TO'	G11_049	'ELK CITY 230KV (ELKCTY-6) 230/138/13.8KV TRANSFORMER CKT 1'	287	0.050	116.15	'DBL-MATT-TAT'
13WP	00NR	0	'FROM->TO'	G11_049	'ELK CITY 230KV (ELKCTY-6) 230/138/13.8KV TRANSFORMER CKT 1'	287	0.050	115.47	'DBL-MATT-TAT'
13WP	00NR	0	'FROM->TO'	G11_049	'ELK CITY 230KV (ELKCTY-6) 230/138/13.8KV TRANSFORMER CKT 1'	287	0.050	110.68	'G11_051T 345.00 - TATONGA7 345.00 345KV CKT 1'
13WP	00NR	0	'FROM->TO'	G11_049	'ELK CITY 230KV (ELKCTY-6) 230/138/13.8KV TRANSFORMER CKT 1'	287	0.050	110.09	'G11_051T 345.00 - TATONGA7 345.00 345KV CKT 1'
13WP	00NR	0	'FROM->TO'	G11_049	'ELK CITY 230KV (ELKCTY-6) 230/138/13.8KV TRANSFORMER CKT 1'	287	0.050	109.21	'G11_051T 345.00 - WOODWARD DISTRICT EHV 345KV CKT 1'
13WP	00NR	0	'FROM->TO'	G11_049	'ELK CITY 230KV (ELKCTY-6) 230/138/13.8KV TRANSFORMER CKT 1'	287	0.050	108.70	'G11_051T 345.00 - WOODWARD DISTRICT EHV 345KV CKT 1'
13WP	00NR	0	'FROM->TO'	G11_049	'GRAPEVINE INTERCHANGE - STATELINE INTERCHANGE 230KV CKT 1'	361	0.050	101.36	'DBL-MATT-TAT'
12SP	00NR	0	'TO->FROM'	G11_049	'ROMAN NOSE - SOUTHARD 138KV CKT 1'	153	0.050	124.34	'DBL-MATT-TAT'
12SP	00NR	0	'TO->FROM'	G11_049	'EL RENO - ROMAN NOSE 138KV CKT 1'	153	0.050	121.03	'DBL-MATT-TAT'
12SP	00NR	0	'TO->FROM'	G11_049	'ROMAN NOSE - SOUTHARD 138KV CKT 1'	153	0.050	107.72	'G11_051T 345.00 - TATONGA7 345.00 345KV CKT 1'
12SP	00NR	0	'TO->FROM'	G11_049	'EL RENO - ROMAN NOSE 138KV CKT 1'	153	0.050	107.39	'G11_051T 345.00 - TATONGA7 345.00 345KV CKT 1'
12SP	00NR	0	'TO->FROM'	G11_049	'EL RENO - ROMAN NOSE 138KV CKT 1'	153	0.050	103.88	'G11_051T 345.00 - WOODWARD DISTRICT EHV 345KV CKT 1'
12SP	00NR	0	'TO->FROM'	G11_049	'ROMAN NOSE - SOUTHARD 138KV CKT 1'	153	0.050	103.58	'G11_051T 345.00 - WOODWARD DISTRICT EHV 345KV CKT 1'
13SP	00NR	0	'TO->FROM'	G11_049	'ROMAN NOSE - SOUTHARD 138KV CKT 1'	153	0.049	121.43	'DBL-MATT-TAT'
13SP	00NR	0	'TO->FROM'	G11_049	'EL RENO - ROMAN NOSE 138KV CKT 1'	153	0.049	118.40	'DBL-MATT-TAT'
13SP	00NR	0	'TO->FROM'	G11_049	'ROMAN NOSE - SOUTHARD 138KV CKT 1'	153	0.049	105.04	'G11_051T 345.00 - TATONGA7 345.00 345KV CKT 1'
13SP	00NR	0	'TO->FROM'	G11_049	'EL RENO - ROMAN NOSE 138KV CKT 1'	153	0.049	104.89	'G11_051T 345.00 - TATONGA7 345.00 345KV CKT 1'
13SP	00NR	0	'TO->FROM'	G11_049	'EL RENO - ROMAN NOSE 138KV CKT 1'	153	0.049	101.39	'G11_051T 345.00 - WOODWARD DISTRICT EHV 345KV CKT 1'
13SP	00NR	0	'TO->FROM'	G11_049	'ROMAN NOSE - SOUTHARD 138KV CKT 1'	153	0.049	100.98	'G11_051T 345.00 - WOODWARD DISTRICT EHV 345KV CKT 1'
12G	03ALL	0		G11_049	NCONV-Iteration Limit	1792	0.048	47.07	'G11-17T 345.00 - POST ROCK 345KV CKT 1'
17SP	00NR	0	'TO->FROM'	G11_049	'ROMAN NOSE - SOUTHARD 138KV CKT 1'	153	0.047	105.89	'G11_051T 345.00 - TATONGA7 345.00 345KV CKT 1'
17SP	00NR	0	'TO->FROM'	G11_049	'EL RENO - ROMAN NOSE 138KV CKT 1'	153	0.047	104.58	'G11_051T 345.00 - TATONGA7 345.00 345KV CKT 1'
17SP	00NR	0	'TO->FROM'	G11_049	'ROMAN NOSE - SOUTHARD 138KV CKT 1'	153	0.047	101.72	'G11_051T 345.00 - WOODWARD DISTRICT EHV 345KV CKT 1'
17SP	00NR	0	'TO->FROM'	G11_049	'EL RENO - ROMAN NOSE 138KV CKT 1'	153	0.047	100.96	'G11_051T 345.00 - WOODWARD DISTRICT EHV 345KV CKT 1'
12WP	00NR	0	'TO->FROM'	G11_049	'ROMAN NOSE - SOUTHARD 138KV CKT 1'	185	0.047	128.15	'DBL-MATT-TAT'
12WP	00NR	0	'TO->FROM'	G11_049	'EL RENO - ROMAN NOSE 138KV CKT 1'	185	0.047	122.73	'DBL-MATT-TAT'
12WP	00NR	0	'TO->FROM'	G11_049	'ROMAN NOSE - SOUTHARD 138KV CKT 1'	185	0.047	113.53	'G11_051T 345.00 - TATONGA7 345.00 345KV CKT 1'
12WP	00NR	0	'TO->FROM'	G11_049	'ROMAN NOSE - SOUTHARD 138KV CKT 1'	185	0.047	109.67	'G11_051T 345.00 - WOODWARD DISTRICT EHV 345KV CKT 1'
12WP	00NR	0	'TO->FROM'	G11_049	'EL RENO - ROMAN NOSE 138KV CKT 1'	185	0.047	109.10	'G11_051T 345.00 - TATONGA7 345.00 345KV CKT 1'
12WP	00NR	0	'TO->FROM'	G11_049	'EL RENO - ROMAN NOSE 138KV CKT 1'	185	0.047	105.96	'G11_051T 345.00 - WOODWARD DISTRICT EHV 345KV CKT 1'
13WP	00NR	0	'TO->FROM'	G11_049	'ROMAN NOSE - SOUTHARD 138KV CKT 1'	185	0.047	124.48	'DBL-MATT-TAT'
13WP	00NR	0	'TO->FROM'	G11_049	'EL RENO - ROMAN NOSE 138KV CKT 1'	185	0.047	118.67	'DBL-MATT-TAT'
13WP	00NR	0	'TO->FROM'	G11_049	'ROMAN NOSE - SOUTHARD 138KV CKT 1'	185	0.047	110.67	'G11_051T 345.00 - TATONGA7 345.00 345KV CKT 1'
13WP	00NR	0	'TO->FROM'	G11_049	'ROMAN NOSE - SOUTHARD 138KV CKT 1'	185	0.047	107.32	'G11_051T 345.00 - WOODWARD DISTRICT EHV 345KV CKT 1'
13WP	00NR	0	'TO->FROM'	G11_049	'EL RENO - ROMAN NOSE 138KV CKT 1'	185	0.047	106.38	'G11_051T 345.00 - TATONGA7 345.00 345KV CKT 1'
13WP	00NR	0	'TO->FROM'	G11_049	'EL RENO - ROMAN NOSE 138KV CKT 1'	185	0.047	103.94	'G11_051T 345.00 - WOODWARD DISTRICT EHV 345KV CKT 1'
17WP	00NR	0	'TO->FROM'	G11_049	'ROMAN NOSE - SOUTHARD 138KV CKT 1'	185	0.047	116.00	'DBL-MATT-TAT'
17WP	00NR	0	'TO->FROM'	G11_049	'EL RENO - ROMAN NOSE 138KV CKT 1'	185	0.047	110.42	'DBL-MATT-TAT'
17WP	00NR	0	'TO->FROM'	G11_049	'ROMAN NOSE - SOUTHARD 138KV CKT 1'	185	0.047	102.15	'G11_051T 345.00 - TATONGA7 345.00 345KV CKT 1'
12WP	00NR	0	'TO->FROM'	G11_049	'GLASS MOUNTAIN - MOORELAND 138KV CKT 1'	152	0.045	161.65	'DBL-MATT-TAT'
12WP	00NR	0	'TO->FROM'	G11_049	'GLASS MOUNTAIN - MOORELAND 138KV CKT 1'	152	0.045	145.22	'G11_051T 345.00 - TATONGA7 345.00 345KV CKT 1'
12WP	00NR	0	'TO->FROM'	G11_049	'GLASS MOUNTAIN - MOORELAND 138KV CKT 1'	152	0.045	141.30	'G11_051T 345.00 - WOODWARD DISTRICT EHV 345KV CKT 1'
12WP	00NR	0	'TO->FROM'	G11_049	'CLEO CORNER - GLASS MOUNTAIN 138KV CKT 1'	185	0.045	130.14	'DBL-MATT-TAT'
12WP	00NR	0	'TO->FROM'	G11_049	'CLEO CORNER - GLASS MOUNTAIN 138KV CKT 1'	185	0.045	116.81	'G11_051T 345.00 - TATONGA7 345.00 345KV CKT 1'
12WP	00NR	0	'TO->FROM'	G11_049	'CLEO CORNER - GLASS MOUNTAIN 138KV CKT 1'	185	0.045	113.61	'G11_051T 345.00 - WOODWARD DISTRICT EHV 345KV CKT 1'
17WP	00NR	0	'TO->FROM'	G11_049	'GLASS MOUNTAIN - MOORELAND 138KV CKT 1'	152	0.044	151.85	'DBL-MATT-TAT'
17WP	00NR	0	'TO->FROM'	G11_049	'GLASS MOUNTAIN - MOORELAND 138KV CKT 1'	152	0.044	137.62	'G11_051T 345.00 - TATONGA7 345.00 345KV CKT 1'
17WP	00NR	0	'TO->FROM'	G11_049	'GLASS MOUNTAIN - MOORELAND 138KV CKT 1'	152	0.044	133.99	'G11_051T 345.00 - WOODWARD DISTRICT EHV 345KV CKT 1'
17WP	00NR	0	'TO->FROM'	G11_049	'CLEO CORNER - GLASS MOUNTAIN 138KV CKT 1'	185	0.044	122.07	'DBL-MATT-TAT'
17WP	00NR	0	'TO->FROM'	G11_049	'CLEO CORNER - GLASS MOUNTAIN 138KV CKT 1'	185	0.044	110.48	'G11_051T 345.00 - TATONGA7 345.00 345KV CKT 1'
17WP	00NR	0	'TO->FROM'	G11_049	'CLEO CORNER - GLASS MOUNTAIN 138KV CKT 1'	185	0.044	107.51	'G11_051T 345.00 - WOODWARD DISTRICT EHV 345KV CKT 1'
12SP	00NR	0	'TO->FROM'	G11_049	'GLASS MOUNTAIN - MOORELAND 138KV CKT 1'	152	0.044	139.63	'DBL-MATT-TAT'
12SP	00NR	0	'TO->FROM'	G11_049	'CLEO CORNER - GLASS MOUNTAIN 138KV CKT 1'	153	0.044	133.97	'DBL-MATT-TAT'
12SP	00NR	0	'TO->FROM'	G11_049	'GLASS MOUNTAIN - MOORELAND 138KV CKT 1'	152	0.044	125.80	'G11_051T 345.00 - TATONGA7 345.00 345KV CKT 1'
12SP	00NR	0	'TO->FROM'	G11_049	'GLASS MOUNTAIN - MOORELAND 138KV CKT 1'	152	0.044	122.38	'G11_051T 345.00 - WOODWARD DISTRICT EHV 345KV CKT 1'
12SP	00NR	0	'TO->FROM'	G11_049	'CLEO CORNER - GLASS MOUNTAIN 138KV CKT 1'	153	0.044	120.36	'G11_051T 345.00 - TATONGA7 345.00 345KV CKT 1'
12SP	00NR	0	'TO->FROM'	G11_049	'CLEO CORNER - GLASS MOUNTAIN 138KV CKT 1'	153	0.044	116.99	'G11_051T 345.00 - WOODWARD DISTRICT EHV 345KV CKT 1'
13WP	00NR	0	'TO->FROM'	G11_049	'GLASS MOUNTAIN - MOORELAND 138KV CKT 1'	152	0.044	158.57	'DBL-MATT-TAT'
13WP	00NR	0	'TO->FROM'	G11_049	'GLASS MOUNTAIN - MOORELAND 138KV CKT 1'	152	0.044	143.61	'G11_051T 345.00 - TATONGA7 345.00 345KV CKT 1'
13WP	00NR	0	'TO->FROM'	G11_049	'GLASS MOUNTAIN - MOORELAND 138KV CKT 1'	152	0.044	140.13	'G11_051T 345.00 - WOODWARD DISTRICT EHV 345KV CKT 1'
13WP	00NR	0	'TO->FROM'	G11_049	'CLEO CORNER - GLASS MOUNTAIN 138KV CKT 1'	185	0.044	127.62	'DBL-MATT-TAT'

SEASON	GROUP	SCENARIO	DIRECTION	SOURCE	MONITORED ELEMENT	RATE B (MVA)	TDF	(%MVA) LOADING	CONTINGENCY
13WP	00NR	0	'TO->FROM'	G11_049	'CLEO CORNER - GLASS MOUNTAIN 138KV CKT 1'	185	0.044	115.47	'G11_051T 345.00 - TATONGA7 345.00 345KV CKT 1'
13WP	00NR	0	'TO->FROM'	G11_049	'CLEO CORNER - GLASS MOUNTAIN 138KV CKT 1'	185	0.044	112.63	'G11_051T 345.00 - WOODWARD DISTRICT EHV 345KV CKT 1'
13WP	00NR	0	'FROM->TO'	G11_049	'ELK CITY 230KV (ELKCTY-6) 230/138/13.8KV TRANSFORMER CKT 1'	287	0.044	110.20	'DBL-WWRD-BVR'
13WP	00NR	0	'FROM->TO'	G11_049	'ELK CITY 230KV (ELKCTY-6) 230/138/13.8KV TRANSFORMER CKT 1'	287	0.044	109.35	'DBL-WWRD-BVR'
17SP	00NR	0	'TO->FROM'	G11_049	'GLASS MOUNTAIN - MOORELAND 138KV CKT 1'	152	0.044	123.25	'G11_051T 345.00 - TATONGA7 345.00 345KV CKT 1'
17SP	00NR	0	'TO->FROM'	G11_049	'GLASS MOUNTAIN - MOORELAND 138KV CKT 1'	152	0.044	119.69	'G11_051T 345.00 - WOODWARD DISTRICT EHV 345KV CKT 1'
17SP	00NR	0	'TO->FROM'	G11_049	'CLEO CORNER - GLASS MOUNTAIN 138KV CKT 1'	153	0.044	117.57	'G11_051T 345.00 - TATONGA7 345.00 345KV CKT 1'
17SP	00NR	0	'TO->FROM'	G11_049	'CLEO CORNER - GLASS MOUNTAIN 138KV CKT 1'	153	0.044	114.06	'G11_051T 345.00 - WOODWARD DISTRICT EHV 345KV CKT 1'
13SP	00NR	0	'TO->FROM'	G11_049	'GLASS MOUNTAIN - MOORELAND 138KV CKT 1'	152	0.044	138.49	'DBL-MATT-TAT'
13SP	00NR	0	'TO->FROM'	G11_049	'CLEO CORNER - GLASS MOUNTAIN 138KV CKT 1'	153	0.044	132.80	'DBL-MATT-TAT'
13SP	00NR	0	'TO->FROM'	G11_049	'GLASS MOUNTAIN - MOORELAND 138KV CKT 1'	152	0.044	124.81	'G11_051T 345.00 - TATONGA7 345.00 345KV CKT 1'
13SP	00NR	0	'TO->FROM'	G11_049	'GLASS MOUNTAIN - MOORELAND 138KV CKT 1'	152	0.044	121.40	'G11_051T 345.00 - WOODWARD DISTRICT EHV 345KV CKT 1'
13SP	00NR	0	'TO->FROM'	G11_049	'CLEO CORNER - GLASS MOUNTAIN 138KV CKT 1'	153	0.044	119.32	'G11_051T 345.00 - TATONGA7 345.00 345KV CKT 1'
13SP	00NR	0	'TO->FROM'	G11_049	'CLEO CORNER - GLASS MOUNTAIN 138KV CKT 1'	153	0.044	115.96	'G11_051T 345.00 - WOODWARD DISTRICT EHV 345KV CKT 1'
17SP	00NR	0	'TO->FROM'	G11_049	'DOVER SW - OKEENE 138KV CKT 1'	130	0.043	116.32	'G11_051T 345.00 - TATONGA7 345.00 345KV CKT 1'
17SP	00NR	0	'TO->FROM'	G11_049	'DOVER SW - OKEENE 138KV CKT 1'	130	0.043	112.47	'G11_051T 345.00 - WOODWARD DISTRICT EHV 345KV CKT 1'
17SP	00NR	0	'FROM->TO'	G11_049	'EVANS ENERGY CENTER NORTH - MAIZE 138KV CKT 1'	382	0.043	113.45	'BENTON - WICHITA 345KV CKT 1'
17SP	00NR	0	'FROM->TO'	G11_049	'CHISHOLM - MAIZE 138KV CKT 1'	382	0.043	109.10	'BENTON - WICHITA 345KV CKT 1'
17WP	00NR	0	'TO->FROM'	G11_049	'DOVER SW - OKEENE 138KV CKT 1'	143	0.043	139.52	'DBL-MATT-TAT'
17WP	00NR	0	'TO->FROM'	G11_049	'DOVER SW - OKEENE 138KV CKT 1'	143	0.043	124.93	'G11_051T 345.00 - TATONGA7 345.00 345KV CKT 1'
17WP	00NR	0	'TO->FROM'	G11_049	'DOVER SW - OKEENE 138KV CKT 1'	143	0.043	121.36	'G11_051T 345.00 - WOODWARD DISTRICT EHV 345KV CKT 1'
12WP	00NR	0	'FROM->TO'	G11_049	'ELK CITY 230KV (ELKCTY-6) 230/138/13.8KV TRANSFORMER CKT 1'	287	0.043	108.85	'MOORELAND - NINE MILE 138KV CKT 1'
12WP	00NR	0	'FROM->TO'	G11_049	'ELK CITY 230KV (ELKCTY-6) 230/138/13.8KV TRANSFORMER CKT 1'	287	0.043	108.80	'MOREWOOD SW - NINE MILE 138KV CKT 1'
12WP	00NR	0	'FROM->TO'	G11_049	'ELK CITY 230KV (ELKCTY-6) 230/138/13.8KV TRANSFORMER CKT 1'	287	0.043	107.87	'MOORELAND - NINE MILE 138KV CKT 1'
12WP	00NR	0	'FROM->TO'	G11_049	'ELK CITY 230KV (ELKCTY-6) 230/138/13.8KV TRANSFORMER CKT 1'	287	0.043	107.83	'MOREWOOD SW - NINE MILE 138KV CKT 1'
13WP	00NR	0	'FROM->TO'	G11_049	'ELK CITY 230KV (ELKCTY-6) 230/138/13.8KV TRANSFORMER CKT 1'	287	0.043	107.73	'MOORELAND - NINE MILE 138KV CKT 1'
13WP	00NR	0	'FROM->TO'	G11_049	'ELK CITY 230KV (ELKCTY-6) 230/138/13.8KV TRANSFORMER CKT 1'	287	0.043	107.68	'MOREWOOD SW - NINE MILE 138KV CKT 1'
13WP	00NR	0	'FROM->TO'	G11_049	'ELK CITY 230KV (ELKCTY-6) 230/138/13.8KV TRANSFORMER CKT 1'	287	0.043	106.81	'MOORELAND - NINE MILE 138KV CKT 1'
13WP	00NR	0	'FROM->TO'	G11_049	'ELK CITY 230KV (ELKCTY-6) 230/138/13.8KV TRANSFORMER CKT 1'	287	0.043	106.76	'MOREWOOD SW - NINE MILE 138KV CKT 1'
13WP	00NR	0	'FROM->TO'	G11_049	'ELK CITY 230KV (ELKCTY-6) 230/138/13.8KV TRANSFORMER CKT 1'	287	0.043	100.00	'DBL-FINY-HOL'
12WP	00NR	0	'FROM->TO'	G11_049	'ELK CITY 230KV (ELKCTY-6) 230/138/13.8KV TRANSFORMER CKT 1'	287	0.043	100.46	'FINNEY SWITCHING STATION - STEVENSCO 345.00 345KV CKT 1'
12WP	00NR	0	'FROM->TO'	G11_049	'ELK CITY 230KV (ELKCTY-6) 230/138/13.8KV TRANSFORMER CKT 1'	287	0.043	100.06	'FINNEY SWITCHING STATION - STEVENSCO 345.00 345KV CKT 1'
12WP	00NR	0	'FROM->TO'	G11_049	'ELK CITY 230KV (ELKCTY-6) 230/138/13.8KV TRANSFORMER CKT 1'	287	0.043	100.00	'Hitchland Interchange - STEVENSCO 345.00 345KV CKT 1'
12SP	00NR	0	'FROM->TO'	G11_049	'EVANS ENERGY CENTER NORTH - MAIZE 138KV CKT 1'	382	0.043	122.71	'BENTON - WICHITA 345KV CKT 1'
13SP	00NR	0	'FROM->TO'	G11_049	'EVANS ENERGY CENTER NORTH - MAIZE 138KV CKT 1'	382	0.043	120.61	'BENTON - WICHITA 345KV CKT 1'
12SP	00NR	0	'TO->FROM'	G11_049	'CHISHOLM - MAIZE 138KV CKT 1'	382	0.043	118.96	'BENTON - WICHITA 345KV CKT 1'
13SP	00NR	0	'TO->FROM'	G11_049	'CHISHOLM - MAIZE 138KV CKT 1'	382	0.043	116.74	'BENTON - WICHITA 345KV CKT 1'
12WP	00NR	0	'FROM->TO'	G11_049	'ELK CITY 230KV (ELKCTY-6) 230/138/13.8KV TRANSFORMER CKT 1'	287	0.042	105.01	'CHILDRESS - LAKE PAULINE 138KV CKT 1'
12WP	00NR	0	'FROM->TO'	G11_049	'ELK CITY 230KV (ELKCTY-6) 230/138/13.8KV TRANSFORMER CKT 1'	287	0.042	104.48	'CHILDRESS - LAKE PAULINE 138KV CKT 1'
13WP	00NR	0	'FROM->TO'	G11_049	'ELK CITY 230KV (ELKCTY-6) 230/138/13.8KV TRANSFORMER CKT 1'	287	0.042	103.71	'CHILDRESS - LAKE PAULINE 138KV CKT 1'
13WP	00NR	0	'FROM->TO'	G11_049	'ELK CITY 230KV (ELKCTY-6) 230/138/13.8KV TRANSFORMER CKT 1'	287	0.042	103.23	'CHILDRESS - LAKE PAULINE 138KV CKT 1'
13WP	00NR	0	'FROM->TO'	G11_049	'ELK CITY 230KV (ELKCTY-6) 230/138/13.8KV TRANSFORMER CKT 1'	287	0.042	100.32	'GRAY CO 345.00 - SPEARVILLE 345KV CKT 1'
12WP	00NR	0	'FROM->TO'	G11_049	'ELK CITY 230KV (ELKCTY-6) 230/138/13.8KV TRANSFORMER CKT 1'	287	0.042	101.61	'GRAY CO 345.00 - SPEARVILLE 345KV CKT 1'
12WP	00NR	0	'FROM->TO'	G11_049	'ELK CITY 230KV (ELKCTY-6) 230/138/13.8KV TRANSFORMER CKT 1'	287	0.042	101.19	'GRAY CO 345.00 - SPEARVILLE 345KV CKT 1'
12WP	00NR	0	'FROM->TO'	G11_049	'ELK CITY 230KV (ELKCTY-6) 230/138/13.8KV TRANSFORMER CKT 1'	287	0.042	101.85	'Hitchland Interchange - WOODWARD DISTRICT EHV 345KV CKT 2'
12WP	00NR	0	'FROM->TO'	G11_049	'ELK CITY 230KV (ELKCTY-6) 230/138/13.8KV TRANSFORMER CKT 1'	287	0.042	101.38	'Hitchland Interchange - WOODWARD DISTRICT EHV 345KV CKT 2'
13WP	00NR	0	'FROM->TO'	G11_049	'ELK CITY 230KV (ELKCTY-6) 230/138/13.8KV TRANSFORMER CKT 1'	287	0.042	100.59	'Hitchland Interchange - WOODWARD DISTRICT EHV 345KV CKT 2'
13WP	00NR	0	'FROM->TO'	G11_049	'ELK CITY 230KV (ELKCTY-6) 230/138/13.8KV TRANSFORMER CKT 1'	287	0.042	100.17	'Hitchland Interchange - WOODWARD DISTRICT EHV 345KV CKT 2'
12WP	00NR	0	'FROM->TO'	G11_049	'ELK CITY 230KV (ELKCTY-6) 230/138/13.8KV TRANSFORMER CKT 1'	287	0.041	102.84	'ELK CITY - RED HILLS WIND 138KV CKT 1'
12WP	00NR	0	'FROM->TO'	G11_049	'ELK CITY 230KV (ELKCTY-6) 230/138/13.8KV TRANSFORMER CKT 1'	287	0.041	102.31	'ELK CITY - RED HILLS WIND 138KV CKT 1'
12WP	00NR	0	'FROM->TO'	G11_049	'ELK CITY 230KV (ELKCTY-6) 230/138/13.8KV TRANSFORMER CKT 1'	287	0.041	102.24	'MOREWOOD SW - RED HILLS WIND 138KV CKT 1'
12WP	00NR	0	'FROM->TO'	G11_049	'ELK CITY 230KV (ELKCTY-6) 230/138/13.8KV TRANSFORMER CKT 1'	287	0.041	101.69	'MOREWOOD SW - RED HILLS WIND 138KV CKT 1'
13WP	00NR	0	'FROM->TO'	G11_049	'ELK CITY 230KV (ELKCTY-6) 230/138/13.8KV TRANSFORMER CKT 1'	287	0.041	101.68	'ELK CITY - RED HILLS WIND 138KV CKT 1'
13WP	00NR	0	'FROM->TO'	G11_049	'ELK CITY 230KV (ELKCTY-6) 230/138/13.8KV TRANSFORMER CKT 1'	287	0.041	101.19	'ELK CITY - RED HILLS WIND 138KV CKT 1'
12WP	00NR	0	'FROM->TO'	G11_049	'ELK CITY 230KV (ELKCTY-6) 230/138/13.8KV TRANSFORMER CKT 1'	287	0.041	101.12	'MATTHEWSON 345.00 - TATONGA7 345.00 345KV CKT 1'
12WP	00NR	0	'FROM->TO'	G11_049	'ELK CITY 230KV (ELKCTY-6) 230/138/13.8KV TRANSFORMER CKT 1'	287	0.041	101.12	'MATTHEWSON 345.00 - TATONGA7 345.00 345KV CKT 2'
13WP	00NR	0	'FROM->TO'	G11_049	'ELK CITY 230KV (ELKCTY-6) 230/138/13.8KV TRANSFORMER CKT 1'	287	0.041	101.11	'MOREWOOD SW - RED HILLS WIND 138KV CKT 1'
12WP	00NR	0	'FROM->TO'	G11_049	'ELK CITY 230KV (ELKCTY-6) 230/138/13.8KV TRANSFORMER CKT 1'	287	0.041	100.76	'MATTHEWSON 345.00 - TATONGA7 345.00 345KV CKT 1'
12WP	00NR	0	'FROM->TO'	G11_049	'ELK CITY 230KV (ELKCTY-6) 230/138/13.8KV TRANSFORMER CKT 1'	287	0.041	100.76	'MATTHEWSON 345.00 - TATONGA7 345.00 345KV CKT 2'
13WP	00NR	0	'FROM->TO'	G11_049	'ELK CITY 230KV (ELKCTY-6) 230/138/13.8KV TRANSFORMER CKT 1'	287	0.041	100.61	'MOREWOOD SW - RED HILLS WIND 138KV CKT 1'
12WP	00NR	0	'FROM->TO'	G11_049	'WICHITA (WICHT12X) 345/138/13.8KV TRANSFORMER CKT 1'	440	0.041	111.73	'BENTON - WICHITA 345KV CKT 1'
12WP	00NR	0	'FROM->TO'	G11_049	'WICHITA (WICHT12X) 345/138/13.8KV TRANSFORMER CKT 1'	440	0.041	110.42	'BENTON - WICHITA 345KV CKT 1'
12WP	00NR	0	'FROM->TO'	G11_049	'ELK CITY 230KV (ELKCTY-6) 230/138/13.8KV TRANSFORMER CKT 1'	287	0.041	103.69	'KIRBY SWITCHING STATION - MCCLELLAN SUB 115KV CKT 1'
12WP	00NR	0	'FROM->TO'	G11_049	'ELK CITY 230KV (ELKCTY-6) 230/138/13.8KV TRANSFORMER CKT 1'	287	0.041	103.53	'MCCLELLAN SUB - MCLEAN RURAL SUB 115KV CKT 1'
12WP	00NR	0	'FROM->TO'	G11_049	'ELK CITY 230KV (ELKCTY-6) 230/138/13.8KV TRANSFORMER CKT 1'	287	0.041	103.20	'KIRBY SWITCHING STATION - MCCLELLAN SUB 115KV CKT 1'
12WP	00NR	0	'FROM->TO'	G11_049	'ELK CITY 230KV (ELKCTY-6) 230/138/13.8KV TRANSFORMER CKT 1'	287	0.041	103.05	'SHAMROCK (SHAMRCK1) 115/69/14.4KV TRANSFORMER CKT 1'
12WP	00NR	0	'FROM->TO'	G11_049	'ELK CITY 230KV (ELKCTY-6) 230/138/13.8KV TRANSFORMER CKT 1'	287	0.041	103.05	'MCLEAN RURAL SUB - SHAMROCK 115KV CKT 1'
12WP	00NR	0	'FROM->TO'	G11_049	'ELK CITY 230KV (ELKCTY-6) 230/138/13.8KV TRANSFORMER CKT 1'	287	0.041	103.04	'MCCLELLAN SUB - MCLEAN RURAL SUB 115KV CKT 1'
12WP	00NR	0	'FROM->TO'	G11_049	'ELK CITY 230KV (ELKCTY-6) 230/138/13.8KV TRANSFORMER CKT 1'	287	0.041	102.58	'SHAMROCK (SHAMRCK1) 115/69/14.4KV TRANSFORMER CKT 1'
12WP	00NR	0	'FROM->TO'	G11_049	'ELK CITY 230KV (ELKCTY-6) 230/138/13.8KV TRANSFORMER CKT 1'	287	0.041	102.58	'MCLEAN RURAL SUB - SHAMROCK 115KV CKT 1'
12WP	00NR	0	'FROM->TO'	G11_049	'ELK CITY 230KV (ELKCTY-6) 230/138/13.8KV TRANSFORMER CKT 1'	287	0.041	102.54	'SHAMROCK - WELLINGTON 138KV CKT 1'
12WP	00NR	0	'FROM->TO'	G11_049	'ELK CITY 230KV (ELKCTY-6) 230/138/13.8KV TRANSFORMER CKT 1'	287	0.041	102.53	'SHAMROCK (SHAMRCK2) 138/69/14.4KV TRANSFORMER CKT 1'
12WP	00NR	0	'FROM->TO'	G11_049	'ELK CITY 230KV (ELKCTY-6) 230/138/13.8KV TRANSFORMER CKT 1'	287	0.041	102.10	'SHAMROCK - WELLINGTON 138KV CKT 1'
12WP	00NR	0	'FROM->TO'	G11_049	'ELK CITY 230KV (ELKCTY-6) 230/138/13.8KV TRANSFORMER CKT 1'	287	0.041	102.09	'SHAMROCK (SHAMRCK2) 138/69/14.4KV TRANSFORMER CKT 1'
12WP	00NR	0	'FROM->TO'	G11_049	'ELK CITY 230KV (ELKCTY-6) 230/138/13.8KV TRANSFORMER CKT 1'	287	0.041	101.97	'HOLLIS TAP - WELLINGTON 138KV CKT 1'
12WP	00NR	0	'FROM->TO'	G11_049	'ELK CITY 230KV (ELKCTY-6) 230/138/13.8KV TRANSFORMER CKT 1'	287	0.041	101.81	'CHILDRESS - HOLLIS TAP 138KV CKT 1'
12WP	00NR	0	'FROM->TO'	G11_049	'ELK CITY 230KV (ELKCTY-6) 230/138/13.8KV TRANSFORMER CKT 1'	287	0.041	101.54	'HOLLIS TAP - WELLINGTON 138KV CKT 1'
12WP	00NR	0	'FROM->TO'	G11_049	'ELK CITY 230KV (ELKCTY-6) 230/138/13.8KV TRANSFORMER CKT 1'	287	0.041	101.39	'CHILDRESS - HOLLIS TAP 138KV CKT 1'

SEASON	GROUP	SCENARIO	DIRECTION	SOURCE	MONITORED ELEMENT	RATE B (MVA)	TDF	(%MVA) LOADING	CONTINGENCY
13WP	00NR	0	'FROM->TO'	G11_049	'ELK CITY 230KV (ELKCTY-6) 230/138/13.8KV TRANSFORMER CKT 1'	287	0.041	102.46	'KIRBY SWITCHING STATION - MCCLELLAN SUB 115KV CKT 1'
13WP	00NR	0	'FROM->TO'	G11_049	'ELK CITY 230KV (ELKCTY-6) 230/138/13.8KV TRANSFORMER CKT 1'	287	0.041	102.29	'MCCLELLAN SUB - MCLEAN RURAL SUB 115KV CKT 1'
13WP	00NR	0	'FROM->TO'	G11_049	'ELK CITY 230KV (ELKCTY-6) 230/138/13.8KV TRANSFORMER CKT 1'	287	0.041	102.13	'SPP-SWPS-T54'
13WP	00NR	0	'FROM->TO'	G11_049	'ELK CITY 230KV (ELKCTY-6) 230/138/13.8KV TRANSFORMER CKT 1'	287	0.041	102.01	'KIRBY SWITCHING STATION - MCCLELLAN SUB 115KV CKT 1'
13WP	00NR	0	'FROM->TO'	G11_049	'ELK CITY 230KV (ELKCTY-6) 230/138/13.8KV TRANSFORMER CKT 1'	287	0.041	101.85	'MCCLELLAN SUB - MCLEAN RURAL SUB 115KV CKT 1'
13WP	00NR	0	'FROM->TO'	G11_049	'ELK CITY 230KV (ELKCTY-6) 230/138/13.8KV TRANSFORMER CKT 1'	287	0.041	101.81	'SHAMROCK (SHAMRCK1) 115/69/14.4KV TRANSFORMER CKT 1'
13WP	00NR	0	'FROM->TO'	G11_049	'ELK CITY 230KV (ELKCTY-6) 230/138/13.8KV TRANSFORMER CKT 1'	287	0.041	101.80	'MCLEAN RURAL SUB - SHAMROCK 115KV CKT 1'
13WP	00NR	0	'FROM->TO'	G11_049	'ELK CITY 230KV (ELKCTY-6) 230/138/13.8KV TRANSFORMER CKT 1'	287	0.041	101.70	'SPP-SWPS-T54'
13WP	00NR	0	'FROM->TO'	G11_049	'ELK CITY 230KV (ELKCTY-6) 230/138/13.8KV TRANSFORMER CKT 1'	287	0.041	101.38	'SHAMROCK (SHAMRCK1) 115/69/14.4KV TRANSFORMER CKT 1'
13WP	00NR	0	'FROM->TO'	G11_049	'ELK CITY 230KV (ELKCTY-6) 230/138/13.8KV TRANSFORMER CKT 1'	287	0.041	101.38	'MCLEAN RURAL SUB - SHAMROCK 115KV CKT 1'
13WP	00NR	0	'FROM->TO'	G11_049	'ELK CITY 230KV (ELKCTY-6) 230/138/13.8KV TRANSFORMER CKT 1'	287	0.041	101.30	'SHAMROCK - WELLINGTON 138KV CKT 1'
13WP	00NR	0	'FROM->TO'	G11_049	'ELK CITY 230KV (ELKCTY-6) 230/138/13.8KV TRANSFORMER CKT 1'	287	0.041	101.29	'SHAMROCK (SHAMRCK2) 138/69/14.4KV TRANSFORMER CKT 1'
13WP	00NR	0	'FROM->TO'	G11_049	'ELK CITY 230KV (ELKCTY-6) 230/138/13.8KV TRANSFORMER CKT 1'	287	0.041	100.90	'SHAMROCK - WELLINGTON 138KV CKT 1'
13WP	00NR	0	'FROM->TO'	G11_049	'ELK CITY 230KV (ELKCTY-6) 230/138/13.8KV TRANSFORMER CKT 1'	287	0.041	100.89	'SHAMROCK (SHAMRCK2) 138/69/14.4KV TRANSFORMER CKT 1'
13WP	00NR	0	'FROM->TO'	G11_049	'ELK CITY 230KV (ELKCTY-6) 230/138/13.8KV TRANSFORMER CKT 1'	287	0.041	100.72	'HOLLIS TAP - WELLINGTON 138KV CKT 1'
13WP	00NR	0	'FROM->TO'	G11_049	'ELK CITY 230KV (ELKCTY-6) 230/138/13.8KV TRANSFORMER CKT 1'	287	0.041	100.56	'CHILDRESS - HOLLIS TAP 138KV CKT 1'
13WP	00NR	0	'FROM->TO'	G11_049	'ELK CITY 230KV (ELKCTY-6) 230/138/13.8KV TRANSFORMER CKT 1'	287	0.041	100.34	'HOLLIS TAP - WELLINGTON 138KV CKT 1'
13WP	00NR	0	'FROM->TO'	G11_049	'ELK CITY 230KV (ELKCTY-6) 230/138/13.8KV TRANSFORMER CKT 1'	287	0.041	100.18	'CHILDRESS - HOLLIS TAP 138KV CKT 1'
17WP	00NR	0	'TO->FROM'	G11_049	'CLINTON JUNCTION - ELK CITY 138KV CKT 1'	210	0.040	101.36	'DBL-MATT-TAT'
13WP	00NR	0	'TO->FROM'	G11_049	'CLINTON JUNCTION - ELK CITY 138KV CKT 1'	210	0.040	108.57	'DBL-MATT-TAT'
12WP	00NR	0	'TO->FROM'	G11_049	'CLINTON JUNCTION - ELK CITY 138KV CKT 1'	210	0.040	110.70	'DBL-MATT-TAT'
12WP	00NR	0	'TO->FROM'	G11_049	'CLINTON JUNCTION - ELK CITY 138KV CKT 1'	210	0.040	100.79	'G11_051T 345.00 - TATONGA7 345.00 345KV CKT 1'
17WP	00NR	0	'TO->FROM'	G11_049	'CEDARDALE - MOORELAND 138KV CKT 1'	214	0.040	102.24	'DBL-MATT-TAT'
17WP	00NR	0	'FROM->TO'	G11_049	'CEDARDALE - OKEENE 138KV CKT 1'	214	0.040	101.06	'DBL-MATT-TAT'
12WP	00NR	0	'FROM->TO'	G11_049	'ELK CITY 230KV (ELKCTY-6) 230/138/13.8KV TRANSFORMER CKT 1'	287	0.040	100.75	'LAKE PAULINE - RUSSELL 138KV CKT 1'
12WP	00NR	0	'FROM->TO'	G11_049	'ELK CITY 230KV (ELKCTY-6) 230/138/13.8KV TRANSFORMER CKT 1'	287	0.040	100.39	'LAKE PAULINE - RUSSELL 138KV CKT 1'
13WP	00NR	0	'FROM->TO'	G11_049	'WICHITA (WICHT12X) 345/138/13.8KV TRANSFORMER CKT 1'	440	0.040	105.68	'BENTON - WICHITA 345KV CKT 1'
13WP	00NR	0	'FROM->TO'	G11_049	'WICHITA (WICHT12X) 345/138/13.8KV TRANSFORMER CKT 1'	440	0.040	103.47	'BENTON - WICHITA 345KV CKT 1'
12WP	00NR	0	'FROM->TO'	G11_049	'ELK CITY 230KV (ELKCTY-6) 230/138/13.8KV TRANSFORMER CKT 1'	287	0.039	102.22	'BEAVER CO 345.00 - WOODWARD DISTRICT EHV 345KV CKT 1'
12WP	00NR	0	'FROM->TO'	G11_049	'ELK CITY 230KV (ELKCTY-6) 230/138/13.8KV TRANSFORMER CKT 1'	287	0.039	101.73	'BEAVER CO 345.00 - WOODWARD DISTRICT EHV 345KV CKT 1'
13WP	00NR	0	'FROM->TO'	G11_049	'ELK CITY 230KV (ELKCTY-6) 230/138/13.8KV TRANSFORMER CKT 1'	287	0.039	101.04	'BEAVER CO 345.00 - WOODWARD DISTRICT EHV 345KV CKT 1'
13WP	00NR	0	'FROM->TO'	G11_049	'ELK CITY 230KV (ELKCTY-6) 230/138/13.8KV TRANSFORMER CKT 1'	287	0.039	100.59	'BEAVER CO 345.00 - WOODWARD DISTRICT EHV 345KV CKT 1'
12WP	00NR	0	'FROM->TO'	G11_049	'ELK CITY 230KV (ELKCTY-6) 230/138/13.8KV TRANSFORMER CKT 1'	287	0.039	103.59	'GRAPEVINE INTERCHANGE - KIRBY SWITCHING STATION 115KV CKT 1'
12WP	00NR	0	'FROM->TO'	G11_049	'ELK CITY 230KV (ELKCTY-6) 230/138/13.8KV TRANSFORMER CKT 1'	287	0.039	103.13	'GRAPEVINE INTERCHANGE - KIRBY SWITCHING STATION 115KV CKT 1'
13WP	00NR	0	'FROM->TO'	G11_049	'ELK CITY 230KV (ELKCTY-6) 230/138/13.8KV TRANSFORMER CKT 1'	287	0.039	102.25	'GRAPEVINE INTERCHANGE - KIRBY SWITCHING STATION 115KV CKT 1'
13WP	00NR	0	'FROM->TO'	G11_049	'ELK CITY 230KV (ELKCTY-6) 230/138/13.8KV TRANSFORMER CKT 1'	287	0.039	101.83	'GRAPEVINE INTERCHANGE - KIRBY SWITCHING STATION 115KV CKT 1'
13SP	00NR	0	'FROM->TO'	G11_049	'NORTHWEST (NORTWST2) 345/138/13.8KV TRANSFORMER CKT 1'	493	0.039	114.16	'NORTHWEST (NORTWST3) 345/138/13.8KV TRANSFORMER CKT 1'
13SP	00NR	0	'FROM->TO'	G11_049	'NORTHWEST (NORTWST2) 345/138/13.8KV TRANSFORMER CKT 1'	493	0.039	111.65	'NORTHWEST (NORTWST3) 345/138/13.8KV TRANSFORMER CKT 1'
12SP	00NR	0	'FROM->TO'	G11_049	'NORTHWEST (NORTWST2) 345/138/13.8KV TRANSFORMER CKT 1'	493	0.039	116.95	'NORTHWEST (NORTWST3) 345/138/13.8KV TRANSFORMER CKT 1'
12SP	00NR	0	'FROM->TO'	G11_049	'NORTHWEST (NORTWST2) 345/138/13.8KV TRANSFORMER CKT 1'	493	0.039	114.57	'NORTHWEST (NORTWST3) 345/138/13.8KV TRANSFORMER CKT 1'
17WP	00NR	0	'FROM->TO'	G11_049	'WICHITA (WICHT12X) 345/138/13.8KV TRANSFORMER CKT 1'	440	0.039	100.91	'BENTON - WICHITA 345KV CKT 1'
17WP	00NR	0	'FROM->TO'	G11_049	'WICHITA (WICHT12X) 345/138/13.8KV TRANSFORMER CKT 1'	440	0.039	100.17	'BENTON - WICHITA 345KV CKT 1'
12WP	00NR	0	'FROM->TO'	G11_049	'ELK CITY 230KV (ELKCTY-6) 230/138/13.8KV TRANSFORMER CKT 1'	287	0.039	105.49	'GEN336821 1-GRAND GULF UNIT'
12WP	00NR	0	'FROM->TO'	G11_049	'ELK CITY 230KV (ELKCTY-6) 230/138/13.8KV TRANSFORMER CKT 1'	287	0.039	105.01	'GEN336821 1-GRAND GULF UNIT'
12WP	00NR	0	'FROM->TO'	G11_049	'ELK CITY 230KV (ELKCTY-6) 230/138/13.8KV TRANSFORMER CKT 1'	287	0.039	104.82	'GEN336153 1-WATERFORD UNIT#3'
12WP	00NR	0	'FROM->TO'	G11_049	'ELK CITY 230KV (ELKCTY-6) 230/138/13.8KV TRANSFORMER CKT 1'	287	0.039	104.38	'GEN336153 1-WATERFORD UNIT#3'
12WP	00NR	0	'FROM->TO'	G11_049	'ELK CITY 230KV (ELKCTY-6) 230/138/13.8KV TRANSFORMER CKT 1'	287	0.039	104.00	'GEN337911 1-ARKANSAS NUCLEAR ONE UNIT #2'
12WP	00NR	0	'FROM->TO'	G11_049	'ELK CITY 230KV (ELKCTY-6) 230/138/13.8KV TRANSFORMER CKT 1'	287	0.039	103.90	'GEN335831 1-RIVERBEND UNIT#1'
12WP	00NR	0	'FROM->TO'	G11_049	'ELK CITY 230KV (ELKCTY-6) 230/138/13.8KV TRANSFORMER CKT 1'	287	0.039	103.57	'GEN337911 1-ARKANSAS NUCLEAR ONE UNIT #2'
12WP	00NR	0	'FROM->TO'	G11_049	'ELK CITY 230KV (ELKCTY-6) 230/138/13.8KV TRANSFORMER CKT 1'	287	0.039	103.47	'GEN335831 1-RIVERBEND UNIT#1'
12WP	00NR	0	'FROM->TO'	G11_049	'ELK CITY 230KV (ELKCTY-6) 230/138/13.8KV TRANSFORMER CKT 1'	287	0.039	102.95	'GEN337910 1-ARKANSAS NUCLEAR ONE UNIT #1'
12WP	00NR	0	'FROM->TO'	G11_049	'ELK CITY 230KV (ELKCTY-6) 230/138/13.8KV TRANSFORMER CKT 1'	287	0.039	102.55	'GEN532751 1-WOLF CREEK GENERATING STATION UNIT 1'
12WP	00NR	0	'FROM->TO'	G11_049	'ELK CITY 230KV (ELKCTY-6) 230/138/13.8KV TRANSFORMER CKT 1'	287	0.039	102.54	'GEN337910 1-ARKANSAS NUCLEAR ONE UNIT #1'
12WP	00NR	0	'FROM->TO'	G11_049	'ELK CITY 230KV (ELKCTY-6) 230/138/13.8KV TRANSFORMER CKT 1'	287	0.039	102.40	'GEN337652 1-WHITE BLUFF UNIT #1'
12WP	00NR	0	'FROM->TO'	G11_049	'ELK CITY 230KV (ELKCTY-6) 230/138/13.8KV TRANSFORMER CKT 1'	287	0.039	102.36	'GEN338146 1-INDEPENDENCE UNIT #2'
12WP	00NR	0	'FROM->TO'	G11_049	'ELK CITY 230KV (ELKCTY-6) 230/138/13.8KV TRANSFORMER CKT 1'	287	0.039	102.30	'GEN338143 1-INDEPENDENCE UNIT #1'
12WP	00NR	0	'FROM->TO'	G11_049	'ELK CITY 230KV (ELKCTY-6) 230/138/13.8KV TRANSFORMER CKT 1'	287	0.039	102.13	'GEN532751 1-WOLF CREEK GENERATING STATION UNIT 1'
12WP	00NR	0	'FROM->TO'	G11_049	'ELK CITY 230KV (ELKCTY-6) 230/138/13.8KV TRANSFORMER CKT 1'	287	0.039	102.00	'GEN337652 1-WHITE BLUFF UNIT #1'
12WP	00NR	0	'FROM->TO'	G11_049	'ELK CITY 230KV (ELKCTY-6) 230/138/13.8KV TRANSFORMER CKT 1'	287	0.039	101.98	'GEN501801 1-DOLET HILLS UNIT1'
12WP	00NR	0	'FROM->TO'	G11_049	'ELK CITY 230KV (ELKCTY-6) 230/138/13.8KV TRANSFORMER CKT 1'	287	0.039	101.96	'GEN338146 1-INDEPENDENCE UNIT #2'
12WP	00NR	0	'FROM->TO'	G11_049	'ELK CITY 230KV (ELKCTY-6) 230/138/13.8KV TRANSFORMER CKT 1'	287	0.039	101.90	'GEN338143 1-INDEPENDENCE UNIT #1'
12WP	00NR	0	'FROM->TO'	G11_049	'ELK CITY 230KV (ELKCTY-6) 230/138/13.8KV TRANSFORMER CKT 1'	287	0.039	101.87	'GEN337041 1-GERALD ANDRUS'
12WP	00NR	0	'FROM->TO'	G11_049	'ELK CITY 230KV (ELKCTY-6) 230/138/13.8KV TRANSFORMER CKT 1'	287	0.039	101.77	'GEN336252 1-NINEMILE POINT UNIT#5'
12WP	00NR	0	'FROM->TO'	G11_049	'ELK CITY 230KV (ELKCTY-6) 230/138/13.8KV TRANSFORMER CKT 1'	287	0.039	101.75	'GEN336251 1-NINEMILE POINT UNIT#4'
12WP	00NR	0	'FROM->TO'	G11_049	'ELK CITY 230KV (ELKCTY-6) 230/138/13.8KV TRANSFORMER CKT 1'	287	0.039	101.70	'GEN337653 1-WHITE BLUFF UNIT #2'
12WP	00NR	0	'FROM->TO'	G11_049	'ELK CITY 230KV (ELKCTY-6) 230/138/13.8KV TRANSFORMER CKT 1'	287	0.039	101.60	'GEN501801 1-DOLET HILLS UNIT1'
12WP	00NR	0	'FROM->TO'	G11_049	'ELK CITY 230KV (ELKCTY-6) 230/138/13.8KV TRANSFORMER CKT 1'	287	0.039	101.48	'GEN337041 1-GERALD ANDRUS'
12WP	00NR	0	'FROM->TO'	G11_049	'ELK CITY 230KV (ELKCTY-6) 230/138/13.8KV TRANSFORMER CKT 1'	287	0.039	101.40	'GEN338388 1-1PLUMPT 23.000'
12WP	00NR	0	'FROM->TO'	G11_049	'ELK CITY 230KV (ELKCTY-6) 230/138/13.8KV TRANSFORMER CKT 1'	287	0.039	101.39	'GEN336252 1-NINEMILE POINT UNIT#5'
12WP	00NR	0	'FROM->TO'	G11_049	'ELK CITY 230KV (ELKCTY-6) 230/138/13.8KV TRANSFORMER CKT 1'	287	0.039	101.36	'GEN336251 1-NINEMILE POINT UNIT#4'
12WP	00NR	0	'FROM->TO'	G11_049	'ELK CITY 230KV (ELKCTY-6) 230/138/13.8KV TRANSFORMER CKT 1'	287	0.039	101.33	'GEN501813 1-RODEMACHER UNIT 3'
12WP	00NR	0	'FROM->TO'	G11_049	'ELK CITY 230KV (ELKCTY-6) 230/138/13.8KV TRANSFORMER CKT 1'	287	0.039	101.31	'GEN337653 1-WHITE BLUFF UNIT #2'
12WP	00NR	0	'FROM->TO'	G11_049	'ELK CITY 230KV (ELKCTY-6) 230/138/13.8KV TRANSFORMER CKT 1'	287	0.039	101.13	'GEN520947 1-HUGO1'
12WP	00NR	0	'FROM->TO'	G11_049	'ELK CITY 230KV (ELKCTY-6) 230/138/13.8KV TRANSFORMER CKT 1'	287	0.039	101.02	'GEN338388 1-1PLUMPT 23.000'
12WP	00NR	0	'FROM->TO'	G11_049	'ELK CITY 230KV (ELKCTY-6) 230/138/13.8KV TRANSFORMER CKT 1'	287	0.039	100.98	'GEN336831 1-BAXTER WILSON SES'
12WP	00NR	0	'FROM->TO'	G11_049	'ELK CITY 230KV (ELKCTY-6) 230/138/13.8KV TRANSFORMER CKT 1'	287	0.039	100.96	'GEN501813 1-RODEMACHER UNIT 3'
12WP	00NR	0	'FROM->TO'	G11_049	'ELK CITY 230KV (ELKCTY-6) 230/138/13.8KV TRANSFORMER CKT 1'	287	0.039	100.86	'GEN501812 1-RODEMACHER UNIT 2'
12WP	00NR	0	'FROM->TO'	G11_049	'ELK CITY 230KV (ELKCTY-6) 230/138/13.8KV TRANSFORMER CKT 1'	287	0.039	100.86	'GEN509403 1-PIRKEY GENERATION'

SEASON	GROUP	SCENARIO	DIRECTION	SOURCE	MONITORED ELEMENT	RATE B (MVA)	TDF	(%MVA) LOADING	CONTINGENCY
12WP	00NR	0	'FROM->TO'	G11_049	'ELK CITY 230KV (ELKCTY-6) 230/138/13.8KV TRANSFORMER CKT 1'	287	0.039	100.83	'GEN335206 1-NELSON UNIT 6'
12WP	00NR	0	'FROM->TO'	G11_049	'ELK CITY 230KV (ELKCTY-6) 230/138/13.8KV TRANSFORMER CKT 1'	287	0.039	100.76	'GEN520947 1-HUGO1'
12WP	00NR	0	'FROM->TO'	G11_049	'ELK CITY 230KV (ELKCTY-6) 230/138/13.8KV TRANSFORMER CKT 1'	287	0.039	100.70	'GEN509416 1-TURK GENERATION'
12WP	00NR	0	'FROM->TO'	G11_049	'ELK CITY 230KV (ELKCTY-6) 230/138/13.8KV TRANSFORMER CKT 1'	287	0.039	100.61	'GEN336831 1-BAXTER WILSON SES'
12WP	00NR	0	'FROM->TO'	G11_049	'ELK CITY 230KV (ELKCTY-6) 230/138/13.8KV TRANSFORMER CKT 1'	287	0.039	100.60	'GEN334440 1-SABINE UNIT 4'
12WP	00NR	0	'FROM->TO'	G11_049	'ELK CITY 230KV (ELKCTY-6) 230/138/13.8KV TRANSFORMER CKT 1'	287	0.039	100.53	'GEN336801 1-BAXTER WILSON UNIT #1'
12WP	00NR	0	'FROM->TO'	G11_049	'ELK CITY 230KV (ELKCTY-6) 230/138/13.8KV TRANSFORMER CKT 1'	287	0.039	100.50	'GEN501812 1-RODEMACHER UNIT 2'
12WP	00NR	0	'FROM->TO'	G11_049	'ELK CITY 230KV (ELKCTY-6) 230/138/13.8KV TRANSFORMER CKT 1'	287	0.039	100.49	'GEN509403 1-PIRKEY GENERATION'
12WP	00NR	0	'FROM->TO'	G11_049	'ELK CITY 230KV (ELKCTY-6) 230/138/13.8KV TRANSFORMER CKT 1'	287	0.039	100.46	'GEN335206 1-NELSON UNIT 6'
12WP	00NR	0	'FROM->TO'	G11_049	'ELK CITY 230KV (ELKCTY-6) 230/138/13.8KV TRANSFORMER CKT 1'	287	0.039	100.37	'GEN640009 1-COOPER NUCLEAR STATION'
12WP	00NR	0	'FROM->TO'	G11_049	'ELK CITY 230KV (ELKCTY-6) 230/138/13.8KV TRANSFORMER CKT 1'	287	0.039	100.34	'GEN509416 1-TURK GENERATION'
12WP	00NR	0	'FROM->TO'	G11_049	'ELK CITY 230KV (ELKCTY-6) 230/138/13.8KV TRANSFORMER CKT 1'	287	0.039	100.32	'GEN335204 1-NELSON UNIT 4'
12WP	00NR	0	'FROM->TO'	G11_049	'ELK CITY 230KV (ELKCTY-6) 230/138/13.8KV TRANSFORMER CKT 1'	287	0.039	100.24	'GEN334440 1-SABINE UNIT 4'
12WP	00NR	0	'FROM->TO'	G11_049	'ELK CITY 230KV (ELKCTY-6) 230/138/13.8KV TRANSFORMER CKT 1'	287	0.039	100.23	'GEN334433 1-SABINE UNIT 3'
12WP	00NR	0	'FROM->TO'	G11_049	'ELK CITY 230KV (ELKCTY-6) 230/138/13.8KV TRANSFORMER CKT 1'	287	0.039	100.22	'GEN334441 1-SABINE UNIT 5'
12WP	00NR	0	'FROM->TO'	G11_049	'ELK CITY 230KV (ELKCTY-6) 230/138/13.8KV TRANSFORMER CKT 1'	287	0.039	100.20	'GEN509404 1-WELSH #1'
12WP	00NR	0	'FROM->TO'	G11_049	'ELK CITY 230KV (ELKCTY-6) 230/138/13.8KV TRANSFORMER CKT 1'	287	0.039	100.20	'GEN509405 1-WELSH #2'
12WP	00NR	0	'FROM->TO'	G11_049	'ELK CITY 230KV (ELKCTY-6) 230/138/13.8KV TRANSFORMER CKT 1'	287	0.039	100.20	'GEN509406 1-WELSH #3'
12WP	00NR	0	'FROM->TO'	G11_049	'ELK CITY 230KV (ELKCTY-6) 230/138/13.8KV TRANSFORMER CKT 1'	287	0.039	100.17	'GEN336801 1-BAXTER WILSON UNIT #1'
12WP	00NR	0	'FROM->TO'	G11_049	'ELK CITY 230KV (ELKCTY-6) 230/138/13.8KV TRANSFORMER CKT 1'	287	0.039	100.00	'GEN335204 1-NELSON UNIT 4'
12WP	00NR	0	'FROM->TO'	G11_049	'ELK CITY 230KV (ELKCTY-6) 230/138/13.8KV TRANSFORMER CKT 1'	287	0.039	100.00	'GEN514805 1-SOONER UNIT 1'
12WP	00NR	0	'FROM->TO'	G11_049	'ELK CITY 230KV (ELKCTY-6) 230/138/13.8KV TRANSFORMER CKT 1'	287	0.039	100.00	'GEN514806 1-SOONER UNIT 2'
12WP	00NR	0	'FROM->TO'	G11_049	'ELK CITY 230KV (ELKCTY-6) 230/138/13.8KV TRANSFORMER CKT 1'	287	0.039	100.00	'GEN515226 1-MUSKOGEE 6G'
12WP	00NR	0	'FROM->TO'	G11_049	'ELK CITY 230KV (ELKCTY-6) 230/138/13.8KV TRANSFORMER CKT 1'	287	0.039	100.00	'GEN560323 1-G10-40 0.6900'
12WP	00NR	0	'FROM->TO'	G11_049	'ELK CITY 230KV (ELKCTY-6) 230/138/13.8KV TRANSFORMER CKT 1'	287	0.039	100.00	'GEN562100 1-G11_054_3 0.6900'
12WP	00NR	0	'FROM->TO'	G11_049	'ELK CITY 230KV (ELKCTY-6) 230/138/13.8KV TRANSFORMER CKT 1'	287	0.039	100.00	'GEN640009 1-COOPER NUCLEAR STATION'
13WP	00NR	0	'FROM->TO'	G11_049	'ELK CITY 230KV (ELKCTY-6) 230/138/13.8KV TRANSFORMER CKT 1'	287	0.039	104.05	'GEN336821 1-GRAND GULF UNIT'
13WP	00NR	0	'FROM->TO'	G11_049	'ELK CITY 230KV (ELKCTY-6) 230/138/13.8KV TRANSFORMER CKT 1'	287	0.039	103.62	'GEN336821 1-GRAND GULF UNIT'
13WP	00NR	0	'FROM->TO'	G11_049	'ELK CITY 230KV (ELKCTY-6) 230/138/13.8KV TRANSFORMER CKT 1'	287	0.039	103.48	'GEN336153 1-WATERFORD UNIT#3'
13WP	00NR	0	'FROM->TO'	G11_049	'ELK CITY 230KV (ELKCTY-6) 230/138/13.8KV TRANSFORMER CKT 1'	287	0.039	103.07	'GEN336153 1-WATERFORD UNIT#3'
13WP	00NR	0	'FROM->TO'	G11_049	'ELK CITY 230KV (ELKCTY-6) 230/138/13.8KV TRANSFORMER CKT 1'	287	0.039	102.61	'GEN337911 1-ARKANSAS NUCLEAR ONE UNIT #2'
13WP	00NR	0	'FROM->TO'	G11_049	'ELK CITY 230KV (ELKCTY-6) 230/138/13.8KV TRANSFORMER CKT 1'	287	0.039	102.54	'GEN335831 1-RIVERBEND UNIT#1'
13WP	00NR	0	'FROM->TO'	G11_049	'ELK CITY 230KV (ELKCTY-6) 230/138/13.8KV TRANSFORMER CKT 1'	287	0.039	102.22	'GEN337911 1-ARKANSAS NUCLEAR ONE UNIT #2'
13WP	00NR	0	'FROM->TO'	G11_049	'ELK CITY 230KV (ELKCTY-6) 230/138/13.8KV TRANSFORMER CKT 1'	287	0.039	102.15	'GEN335831 1-RIVERBEND UNIT#1'
13WP	00NR	0	'FROM->TO'	G11_049	'ELK CITY 230KV (ELKCTY-6) 230/138/13.8KV TRANSFORMER CKT 1'	287	0.039	101.61	'GEN337910 1-ARKANSAS NUCLEAR ONE UNIT #1'
13WP	00NR	0	'FROM->TO'	G11_049	'ELK CITY 230KV (ELKCTY-6) 230/138/13.8KV TRANSFORMER CKT 1'	287	0.039	101.24	'GEN337910 1-ARKANSAS NUCLEAR ONE UNIT #1'
13WP	00NR	0	'FROM->TO'	G11_049	'ELK CITY 230KV (ELKCTY-6) 230/138/13.8KV TRANSFORMER CKT 1'	287	0.039	101.17	'GEN532751 1-WOLF CREEK GENERATING STATION UNIT 1'
13WP	00NR	0	'FROM->TO'	G11_049	'ELK CITY 230KV (ELKCTY-6) 230/138/13.8KV TRANSFORMER CKT 1'	287	0.039	101.08	'GEN337652 1-WHITE BLUFF UNIT #1'
13WP	00NR	0	'FROM->TO'	G11_049	'ELK CITY 230KV (ELKCTY-6) 230/138/13.8KV TRANSFORMER CKT 1'	287	0.039	101.04	'GEN338146 1-INDEPENDENCE UNIT #2'
13WP	00NR	0	'FROM->TO'	G11_049	'ELK CITY 230KV (ELKCTY-6) 230/138/13.8KV TRANSFORMER CKT 1'	287	0.039	100.98	'GEN338143 1-INDEPENDENCE UNIT #1'
13WP	00NR	0	'FROM->TO'	G11_049	'ELK CITY 230KV (ELKCTY-6) 230/138/13.8KV TRANSFORMER CKT 1'	287	0.039	100.79	'GEN532751 1-WOLF CREEK GENERATING STATION UNIT 1'
13WP	00NR	0	'FROM->TO'	G11_049	'ELK CITY 230KV (ELKCTY-6) 230/138/13.8KV TRANSFORMER CKT 1'	287	0.039	100.77	'GEN337653 1-WHITE BLUFF UNIT #2'
13WP	00NR	0	'FROM->TO'	G11_049	'ELK CITY 230KV (ELKCTY-6) 230/138/13.8KV TRANSFORMER CKT 1'	287	0.039	100.72	'GEN337652 1-WHITE BLUFF UNIT #1'
13WP	00NR	0	'FROM->TO'	G11_049	'ELK CITY 230KV (ELKCTY-6) 230/138/13.8KV TRANSFORMER CKT 1'	287	0.039	100.69	'GEN501801 1-DOLET HILLS UNIT1'
13WP	00NR	0	'FROM->TO'	G11_049	'ELK CITY 230KV (ELKCTY-6) 230/138/13.8KV TRANSFORMER CKT 1'	287	0.039	100.68	'GEN338146 1-INDEPENDENCE UNIT #2'
13WP	00NR	0	'FROM->TO'	G11_049	'ELK CITY 230KV (ELKCTY-6) 230/138/13.8KV TRANSFORMER CKT 1'	287	0.039	100.62	'GEN338143 1-INDEPENDENCE UNIT #1'
13WP	00NR	0	'FROM->TO'	G11_049	'ELK CITY 230KV (ELKCTY-6) 230/138/13.8KV TRANSFORMER CKT 1'	287	0.039	100.57	'GEN337041 1-GERALD ANDRUS'
13WP	00NR	0	'FROM->TO'	G11_049	'ELK CITY 230KV (ELKCTY-6) 230/138/13.8KV TRANSFORMER CKT 1'	287	0.039	100.51	'GEN336251 1-NINEMILE POINT UNIT#4'
13WP	00NR	0	'FROM->TO'	G11_049	'ELK CITY 230KV (ELKCTY-6) 230/138/13.8KV TRANSFORMER CKT 1'	287	0.039	100.42	'GEN337653 1-WHITE BLUFF UNIT #2'
13WP	00NR	0	'FROM->TO'	G11_049	'ELK CITY 230KV (ELKCTY-6) 230/138/13.8KV TRANSFORMER CKT 1'	287	0.039	100.34	'GEN501801 1-DOLET HILLS UNIT1'
13WP	00NR	0	'FROM->TO'	G11_049	'ELK CITY 230KV (ELKCTY-6) 230/138/13.8KV TRANSFORMER CKT 1'	287	0.039	100.22	'GEN337041 1-GERALD ANDRUS'
13WP	00NR	0	'FROM->TO'	G11_049	'ELK CITY 230KV (ELKCTY-6) 230/138/13.8KV TRANSFORMER CKT 1'	287	0.039	100.16	'GEN336251 1-NINEMILE POINT UNIT#4'
13WP	00NR	0	'FROM->TO'	G11_049	'ELK CITY 230KV (ELKCTY-6) 230/138/13.8KV TRANSFORMER CKT 1'	287	0.039	100.12	'GEN338388 1-1PLUMPT 23.000'
13WP	00NR	0	'FROM->TO'	G11_049	'ELK CITY 230KV (ELKCTY-6) 230/138/13.8KV TRANSFORMER CKT 1'	287	0.039	100.06	'GEN501813 1-RODEMACHER UNIT 3'
12WP	00NR	0	'FROM->TO'	G11_049	'ELK CITY 230KV (ELKCTY-6) 230/138/13.8KV TRANSFORMER CKT 1'	287	0.038	100.56	'G11_012T 230.00 - HITCHLAND INTERCHANGE 230KV CKT 1'
12WP	00NR	0	'FROM->TO'	G11_049	'ELK CITY 230KV (ELKCTY-6) 230/138/13.8KV TRANSFORMER CKT 1'	287	0.038	100.15	'G11_012T 230.00 - HITCHLAND INTERCHANGE 230KV CKT 1'
17SP	00NR	0	'FROM->TO'	G11_049	'WICHITA (WICHT12X) 345/138/13.8KV TRANSFORMER CKT 1'	440	0.038	107.52	'BENTON - WICHITA 345KV CKT 1'
17SP	00NR	0	'FROM->TO'	G11_049	'WICHITA (WICHT12X) 345/138/13.8KV TRANSFORMER CKT 1'	440	0.038	106.09	'BENTON - WICHITA 345KV CKT 1'
12WP	00NR	0	'FROM->TO'	G11_049	'CLEO CORNER - MEN TAP 138KV CKT 1'	191	0.038	100.70	'DBL-WICH-THI'
13SP	00NR	0	'FROM->TO'	G11_049	'NORTHWEST (NORTWST3) 345/138/13.8KV TRANSFORMER CKT 1'	493	0.038	104.49	'NORTHWEST (NORTWST2) 345/138/13.8KV TRANSFORMER CKT 1'
13SP	00NR	0	'FROM->TO'	G11_049	'NORTHWEST (NORTWST3) 345/138/13.8KV TRANSFORMER CKT 1'	493	0.038	102.18	'NORTHWEST (NORTWST2) 345/138/13.8KV TRANSFORMER CKT 1'
12SP	00NR	0	'FROM->TO'	G11_049	'NORTHWEST (NORTWST3) 345/138/13.8KV TRANSFORMER CKT 1'	493	0.038	107.14	'NORTHWEST (NORTWST2) 345/138/13.8KV TRANSFORMER CKT 1'
12SP	00NR	0	'FROM->TO'	G11_049	'NORTHWEST (NORTWST3) 345/138/13.8KV TRANSFORMER CKT 1'	493	0.038	104.95	'NORTHWEST (NORTWST2) 345/138/13.8KV TRANSFORMER CKT 1'
12WP	00NR	0	'TO->FROM'	G11_049	'DOVER SW - OKEENE 138KV CKT 1'	143	0.038	132.65	'DBL-MATT-TAT'
12WP	00NR	0	'TO->FROM'	G11_049	'DOVER SW - OKEENE 138KV CKT 1'	143	0.038	118.10	'G11_051T 345.00 - TATONGA7 345.00 345KV CKT 1'
12WP	00NR	0	'TO->FROM'	G11_049	'DOVER SW - OKEENE 138KV CKT 1'	143	0.038	114.58	'G11_051T 345.00 - WOODWARD DISTRICT EHV 345KV CKT 1'
13WP	00NR	0	'TO->FROM'	G11_049	'DOVER SW - OKEENE 138KV CKT 1'	143	0.038	133.91	'DBL-MATT-TAT'
13WP	00NR	0	'TO->FROM'	G11_049	'DOVER SW - OKEENE 138KV CKT 1'	143	0.038	120.28	'G11_051T 345.00 - TATONGA7 345.00 345KV CKT 1'
13WP	00NR	0	'TO->FROM'	G11_049	'DOVER SW - OKEENE 138KV CKT 1'	143	0.038	117.04	'G11_051T 345.00 - WOODWARD DISTRICT EHV 345KV CKT 1'
13WP	00NR	0	'FROM->TO'	G11_049	'ELK CITY 230KV (ELKCTY-6) 230/138/13.8KV TRANSFORMER CKT 1'	287	0.037	103.69	'G05-17T 345.00 - Hitchland Interchange 345KV CKT 1'
13WP	00NR	0	'FROM->TO'	G11_049	'ELK CITY 230KV (ELKCTY-6) 230/138/13.8KV TRANSFORMER CKT 1'	287	0.037	103.16	'G05-17T 345.00 - Hitchland Interchange 345KV CKT 1'
13WP	00NR	0	'FROM->TO'	G11_049	'ELK CITY 230KV (ELKCTY-6) 230/138/13.8KV TRANSFORMER CKT 1'	287	0.037	102.47	'G05-17T 345.00 - POTTER COUNTY INTERCHANGE 345KV CKT 1'
13WP	00NR	0	'FROM->TO'	G11_049	'ELK CITY 230KV (ELKCTY-6) 230/138/13.8KV TRANSFORMER CKT 1'	287	0.037	101.99	'G05-17T 345.00 - POTTER COUNTY INTERCHANGE 345KV CKT 1'
13WP	00NR	0	'FROM->TO'	G11_049	'ELK CITY 230KV (ELKCTY-6) 230/138/13.8KV TRANSFORMER CKT 1'	287	0.037	101.32	'POTTER COUNTY INTERCHANGE (WAUK 90343-A) 345/230/13.2KV TRANSFORMER CKT 1'
13WP	00NR	0	'FROM->TO'	G11_049	'ELK CITY 230KV (ELKCTY-6) 230/138/13.8KV TRANSFORMER CKT 1'	287	0.037	100.88	'POTTER COUNTY INTERCHANGE (WAUK 90343-A) 345/230/13.2KV TRANSFORMER CKT 1'
12SP	00NR	0	'TO->FROM'	G11_049	'DOVER SW - OKEENE 138KV CKT 1'	130	0.037	119.90	'DBL-MATT-TAT'
12SP	00NR	0	'TO->FROM'	G11_049	'DOVER SW - OKEENE 138KV CKT 1'	130	0.037	106.38	'G11_051T 345.00 - TATONGA7 345.00 345KV CKT 1'
12WP	00NR	0	'FROM->TO'	G11_049	'ELK CITY 230KV (ELKCTY-6) 230/138/13.8KV TRANSFORMER CKT 1'	287	0.037	105.44	'G05-17T 345.00 - Hitchland Interchange 345KV CKT 1'

SEASON	GROUP	SCENARIO	DIRECTION	SOURCE	MONITORED ELEMENT	RATE B (MVA)	TDF	(%MVA) LOADING	CONTINGENCY
12WP	00NR	0	'FROM->TO'	G11_049	'ELK CITY 230KV (ELKCTY-6) 230/138/13.8KV TRANSFORMER CKT 1'	287	0.037	104.83	'G05-17T 345.00 - Hitchland Interchange 345KV CKT 1'
12WP	00NR	0	'FROM->TO'	G11_049	'ELK CITY 230KV (ELKCTY-6) 230/138/13.8KV TRANSFORMER CKT 1'	287	0.037	104.16	'G05-17T 345.00 - POTTER COUNTY INTERCHANGE 345KV CKT 1'
12WP	00NR	0	'FROM->TO'	G11_049	'ELK CITY 230KV (ELKCTY-6) 230/138/13.8KV TRANSFORMER CKT 1'	287	0.037	103.61	'G05-17T 345.00 - POTTER COUNTY INTERCHANGE 345KV CKT 1'
12WP	00NR	0	'FROM->TO'	G11_049	'ELK CITY 230KV (ELKCTY-6) 230/138/13.8KV TRANSFORMER CKT 1'	287	0.037	103.01	'POTTER COUNTY INTERCHANGE (WAUK 90343-A) 345/230/13.2KV TRANSFORMER CKT 1'
12SP	00NR	0	'TO->FROM'	G11_049	'DOVER SW - OKEENE 138KV CKT 1'	130	0.037	102.97	'G11_051T 345.00 - WOODWARD DISTRICT EHV 345KV CKT 1'
12WP	00NR	0	'FROM->TO'	G11_049	'ELK CITY 230KV (ELKCTY-6) 230/138/13.8KV TRANSFORMER CKT 1'	287	0.037	102.51	'POTTER COUNTY INTERCHANGE (WAUK 90343-A) 345/230/13.2KV TRANSFORMER CKT 1'
13SP	00NR	0	'TO->FROM'	G11_049	'DOVER SW - OKEENE 138KV CKT 1'	130	0.037	120.20	'DBL-MATT-TAT'
13SP	00NR	0	'TO->FROM'	G11_049	'DOVER SW - OKEENE 138KV CKT 1'	130	0.037	106.64	'G11_051T 345.00 - TATONGA7 345.00 345KV CKT 1'
13SP	00NR	0	'TO->FROM'	G11_049	'DOVER SW - OKEENE 138KV CKT 1'	130	0.037	103.48	'G11_051T 345.00 - WOODWARD DISTRICT EHV 345KV CKT 1'
12SP	00NR	0	'TO->FROM'	G11_049	'CEDARDALE - MOORELAND 138KV CKT 1'	179	0.037	106.10	'DBL-MATT-TAT'
12SP	00NR	0	'FROM->TO'	G11_049	'CEDARDALE - OKEENE 138KV CKT 1'	179	0.037	104.51	'DBL-MATT-TAT'
12WP	00NR	0	'TO->FROM'	G11_049	'CEDARDALE - MOORELAND 138KV CKT 1'	214	0.037	102.99	'DBL-MATT-TAT'
12WP	00NR	0	'FROM->TO'	G11_049	'CEDARDALE - OKEENE 138KV CKT 1'	214	0.037	101.90	'DBL-MATT-TAT'
13SP	00NR	0	'TO->FROM'	G11_049	'CEDARDALE - MOORELAND 138KV CKT 1'	179	0.037	104.05	'DBL-MATT-TAT'
13SP	00NR	0	'FROM->TO'	G11_049	'CEDARDALE - OKEENE 138KV CKT 1'	179	0.037	102.46	'DBL-MATT-TAT'
13WP	00NR	0	'TO->FROM'	G11_049	'CEDARDALE - MOORELAND 138KV CKT 1'	214	0.036	100.86	'DBL-MATT-TAT'
13WP	00NR	0	'TO->FROM'	G11_049	'GLASS MOUNTAIN - MOORELAND 138KV CKT 1'	152	0.035	119.26	'DBL-THIS-WWR'
17WP	00NR	0	'TO->FROM'	G11_049	'GLASS MOUNTAIN - MOORELAND 138KV CKT 1'	152	0.035	114.45	'DBL-THIS-WWR'
12G	03ALL	0		G11_049	NCONV-Iteration Limit	0	0.035	9999.00	'SPP-SWPS-03'
12G	03ALL2	0		G11_049	NCONV-Iteration Limit	0	0.035	9999.00	'SPP-SWPS-03'
12WP	00NR	0	'TO->FROM'	G11_049	'CLINTON JUNCTION - ELK CITY 138KV CKT 1'	210	0.035	100.71	'CLINTON AIR FORCE BASE TAP - ELK CITY 138KV CKT 1'
12WP	00NR	0	'TO->FROM'	G11_049	'CLINTON JUNCTION - ELK CITY 138KV CKT 1'	210	0.035	100.12	'CLINTON AIR FORCE BASE TAP - HOBART JUNCTION 138KV CKT 1'
17WP	00NR	0	'FROM->TO'	G11_049	'HARPER - MILAN TAP 138KV CKT 1'	95.6	0.034	270.66	'DBL-WICH-THI'
17WP	00NR	0	'TO->FROM'	G11_049	'CLEARWATER - MILAN TAP 138KV CKT 1'	100	0.034	248.07	'DBL-WICH-THI'
12SP	00NR	0	'TO->FROM'	G11_049	'GLASS MOUNTAIN - MOORELAND 138KV CKT 1'	152	0.034	106.54	'DBL-THIS-WWR'
12SP	00NR	0	'TO->FROM'	G11_049	'CLEO CORNER - GLASS MOUNTAIN 138KV CKT 1'	153	0.034	101.33	'DBL-THIS-WWR'
13SP	00NR	0	'TO->FROM'	G11_049	'GLASS MOUNTAIN - MOORELAND 138KV CKT 1'	152	0.034	106.17	'DBL-THIS-WWR'
13SP	00NR	0	'TO->FROM'	G11_049	'CLEO CORNER - GLASS MOUNTAIN 138KV CKT 1'	153	0.034	100.91	'DBL-THIS-WWR'
17WP	00NR	0	'TO->FROM'	G11_049	'DOVER SW - OKEENE 138KV CKT 1'	143	0.034	100.56	'DBL-THIS-WWR'
13SP	00NR	0	'FROM->TO'	G11_049	'HARPER - MILAN TAP 138KV CKT 1'	95.6	0.034	248.87	'DBL-WICH-THI'
13SP	00NR	0	'TO->FROM'	G11_049	'CLEARWATER - MILAN TAP 138KV CKT 1'	100	0.034	224.01	'DBL-WICH-THI'
12WP	00NR	0	'TO->FROM'	G11_049	'GLASS MOUNTAIN - MOORELAND 138KV CKT 1'	152	0.033	127.96	'DBL-WICH-THI'
12WP	00NR	0	'TO->FROM'	G11_049	'CLEO CORNER - GLASS MOUNTAIN 138KV CKT 1'	185	0.033	102.70	'DBL-WICH-THI'
17WP	00NR	0	'TO->FROM'	G11_049	'GLASS MOUNTAIN - MOORELAND 138KV CKT 1'	152	0.032	120.50	'DBL-WICH-THI'
12SP	00NR	0	'TO->FROM'	G11_049	'GLASS MOUNTAIN - MOORELAND 138KV CKT 1'	152	0.032	114.10	'DBL-WICH-THI'
12SP	00NR	0	'TO->FROM'	G11_049	'CLEO CORNER - GLASS MOUNTAIN 138KV CKT 1'	153	0.032	108.80	'DBL-WICH-THI'
13SP	00NR	0	'TO->FROM'	G11_049	'GLASS MOUNTAIN - MOORELAND 138KV CKT 1'	152	0.032	112.43	'DBL-WICH-THI'
13SP	00NR	0	'TO->FROM'	G11_049	'CLEO CORNER - GLASS MOUNTAIN 138KV CKT 1'	153	0.032	107.10	'DBL-WICH-THI'
12WP	00NR	0	'TO->FROM'	G11_049	'GLASS MOUNTAIN - MOORELAND 138KV CKT 1'	152	0.032	118.26	'LAWTON EASTSIDE - OKLAUNION 345KV CKT 1'
12WP	00NR	0	'TO->FROM'	G11_049	'GLASS MOUNTAIN - MOORELAND 138KV CKT 1'	152	0.032	114.22	'G05-15T 345.00 - OKLAUNION 345KV CKT 1'
12WP	00NR	0	'TO->FROM'	G11_049	'GLASS MOUNTAIN - MOORELAND 138KV CKT 1'	152	0.032	113.92	'G05-15T 345.00 - TUCO INTERCHANGE 345KV CKT 1'
17WP	00NR	0	'TO->FROM'	G11_049	'GLASS MOUNTAIN - MOORELAND 138KV CKT 1'	152	0.031	112.54	'LAWTON EASTSIDE - OKLAUNION 345KV CKT 1'
17WP	00NR	0	'TO->FROM'	G11_049	'DOVER SW - OKEENE 138KV CKT 1'	143	0.031	106.27	'DBL-WICH-THI'
13WP	00NR	0	'TO->FROM'	G11_049	'GLASS MOUNTAIN - MOORELAND 138KV CKT 1'	152	0.031	117.27	'LAWTON EASTSIDE - OKLAUNION 345KV CKT 1'
13WP	00NR	0	'TO->FROM'	G11_049	'GLASS MOUNTAIN - MOORELAND 138KV CKT 1'	152	0.031	113.26	'G05-15T 345.00 - OKLAUNION 345KV CKT 1'
13WP	00NR	0	'TO->FROM'	G11_049	'GLASS MOUNTAIN - MOORELAND 138KV CKT 1'	152	0.031	112.99	'G05-15T 345.00 - TUCO INTERCHANGE 345KV CKT 1'
17WP	00NR	0	'TO->FROM'	G11_049	'DOVER SW - OKEENE 138KV CKT 1'	143	0.031	100.22	'CLEO CORNER - MEN TAP 138KV CKT 1'
17SP	00NR	0	'TO->FROM'	G11_049	'GLASS MOUNTAIN - MOORELAND 138KV CKT 1'	152	0.031	102.13	'LAWTON EASTSIDE - OKLAUNION 345KV CKT 1'
12WP	00NR	0	'TO->FROM'	G11_049	'GLASS MOUNTAIN - MOORELAND 138KV CKT 1'	152	0.031	114.90	'MATTHEWSON 345.00 - TATONGA7 345.00 345KV CKT 1'
12WP	00NR	0	'TO->FROM'	G11_049	'GLASS MOUNTAIN - MOORELAND 138KV CKT 1'	152	0.031	114.90	'MATTHEWSON 345.00 - TATONGA7 345.00 345KV CKT 2'
17WP	00NR	0	'TO->FROM'	G11_049	'GLASS MOUNTAIN - MOORELAND 138KV CKT 1'	152	0.031	109.86	'MATTHEWSON 345.00 - TATONGA7 345.00 345KV CKT 1'
17WP	00NR	0	'TO->FROM'	G11_049	'GLASS MOUNTAIN - MOORELAND 138KV CKT 1'	152	0.031	109.86	'MATTHEWSON 345.00 - TATONGA7 345.00 345KV CKT 2'
12SP	00NR	0	'TO->FROM'	G11_049	'GLASS MOUNTAIN - MOORELAND 138KV CKT 1'	152	0.031	104.51	'LAWTON EASTSIDE - OKLAUNION 345KV CKT 1'
12SP	00NR	0	'TO->FROM'	G11_049	'GLASS MOUNTAIN - MOORELAND 138KV CKT 1'	152	0.031	100.92	'G05-15T 345.00 - OKLAUNION 345KV CKT 1'
12SP	00NR	0	'TO->FROM'	G11_049	'GLASS MOUNTAIN - MOORELAND 138KV CKT 1'	152	0.031	100.67	'G05-15T 345.00 - TUCO INTERCHANGE 345KV CKT 1'
13WP	00NR	0	'TO->FROM'	G11_049	'GLASS MOUNTAIN - MOORELAND 138KV CKT 1'	152	0.031	114.04	'MATTHEWSON 345.00 - TATONGA7 345.00 345KV CKT 1'
13WP	00NR	0	'TO->FROM'	G11_049	'GLASS MOUNTAIN - MOORELAND 138KV CKT 1'	152	0.031	114.04	'MATTHEWSON 345.00 - TATONGA7 345.00 345KV CKT 2'
17WP	00NR	0	'TO->FROM'	G11_049	'DOVER SW - OKEENE 138KV CKT 1'	143	0.031	101.27	'OKEENE - WATONGA SW 69KV CKT 1'
17SP	00NR	0	'TO->FROM'	G11_049	'GLASS MOUNTAIN - MOORELAND 138KV CKT 1'	152	0.031	100.88	'MATTHEWSON 345.00 - TATONGA7 345.00 345KV CKT 1'
17SP	00NR	0	'TO->FROM'	G11_049	'GLASS MOUNTAIN - MOORELAND 138KV CKT 1'	152	0.031	100.88	'MATTHEWSON 345.00 - TATONGA7 345.00 345KV CKT 2'
13SP	00NR	0	'TO->FROM'	G11_049	'GLASS MOUNTAIN - MOORELAND 138KV CKT 1'	152	0.031	103.99	'LAWTON EASTSIDE - OKLAUNION 345KV CKT 1'
13SP	00NR	0	'TO->FROM'	G11_049	'GLASS MOUNTAIN - MOORELAND 138KV CKT 1'	152	0.031	100.46	'G05-15T 345.00 - OKLAUNION 345KV CKT 1'
13SP	00NR	0	'TO->FROM'	G11_049	'GLASS MOUNTAIN - MOORELAND 138KV CKT 1'	152	0.031	100.23	'G05-15T 345.00 - TUCO INTERCHANGE 345KV CKT 1'
12WP	00NR	0	'TO->FROM'	G11_049	'GLASS MOUNTAIN - MOORELAND 138KV CKT 1'	152	0.031	115.51	'CEDARDALE - MOORELAND 138KV CKT 1'
12WP	00NR	0	'TO->FROM'	G11_049	'GLASS MOUNTAIN - MOORELAND 138KV CKT 1'	152	0.031	115.34	'CEDARDALE - OKEENE 138KV CKT 1'
12WP	00NR	0	'TO->FROM'	G11_049	'GLASS MOUNTAIN - MOORELAND 138KV CKT 1'	152	0.031	117.73	'KNOBHILL - MOORELAND 138KV CKT 1'
12WP	00NR	0	'TO->FROM'	G11_049	'GLASS MOUNTAIN - MOORELAND 138KV CKT 1'	152	0.031	117.72	'KNOBHILL (KNOBHIL4) 138/69/13.2KV TRANSFORMER CKT 1'
17WP	00NR	0	'TO->FROM'	G11_049	'GLASS MOUNTAIN - MOORELAND 138KV CKT 1'	152	0.031	110.26	'CEDARDALE - MOORELAND 138KV CKT 1'
17WP	00NR	0	'TO->FROM'	G11_049	'GLASS MOUNTAIN - MOORELAND 138KV CKT 1'	152	0.031	110.08	'CEDARDALE - OKEENE 138KV CKT 1'
17WP	00NR	0	'TO->FROM'	G11_049	'GLASS MOUNTAIN - MOORELAND 138KV CKT 1'	152	0.031	113.30	'KNOBHILL - MOORELAND 138KV CKT 1'
17WP	00NR	0	'TO->FROM'	G11_049	'GLASS MOUNTAIN - MOORELAND 138KV CKT 1'	152	0.031	113.30	'KNOBHILL (KNOBHIL4) 138/69/13.2KV TRANSFORMER CKT 1'
13WP	00NR	0	'TO->FROM'	G11_049	'GLASS MOUNTAIN - MOORELAND 138KV CKT 1'	152	0.030	114.57	'CEDARDALE - MOORELAND 138KV CKT 1'
13WP	00NR	0	'TO->FROM'	G11_049	'GLASS MOUNTAIN - MOORELAND 138KV CKT 1'	152	0.030	114.40	'CEDARDALE - OKEENE 138KV CKT 1'
13WP	00NR	0	'TO->FROM'	G11_049	'GLASS MOUNTAIN - MOORELAND 138KV CKT 1'	152	0.030	116.89	'KNOBHILL - MOORELAND 138KV CKT 1'
13WP	00NR	0	'TO->FROM'	G11_049	'GLASS MOUNTAIN - MOORELAND 138KV CKT 1'	152	0.030	116.89	'KNOBHILL (KNOBHIL4) 138/69/13.2KV TRANSFORMER CKT 1'
12SP	00NR	0	'TO->FROM'	G11_049	'GLASS MOUNTAIN - MOORELAND 138KV CKT 1'	152	0.030	103.75	'MATTHEWSON 345.00 - TATONGA7 345.00 345KV CKT 1'
12SP	00NR	0	'TO->FROM'	G11_049	'GLASS MOUNTAIN - MOORELAND 138KV CKT 1'	152	0.030	103.75	'MATTHEWSON 345.00 - TATONGA7 345.00 345KV CKT 2'
17SP	00NR	0	'TO->FROM'	G11_049	'GLASS MOUNTAIN - MOORELAND 138KV CKT 1'	152	0.030	101.77	'CEDARDALE - MOORELAND 138KV CKT 1'

SEASON	GROUP	SCENARIO	DIRECTION	SOURCE	MONITORED ELEMENT	RATE B (MVA)	TDF	(%MVA) LOADING	CONTINGENCY
17SP	00NR	0	'TO->FROM'	G11_049	'GLASS MOUNTAIN - MOORELAND 138KV CKT 1'	152	0.030	101.58	'CEDARDALE - OKEENE 138KV CKT 1'
12WP	00NR	0	'TO->FROM'	G11_049	'GLASS MOUNTAIN - MOORELAND 138KV CKT 1'	152	0.030	109.44	'DOVER SW - HENESSEY 138KV CKT 1'
12WP	00NR	0	'TO->FROM'	G11_049	'GLASS MOUNTAIN - MOORELAND 138KV CKT 1'	152	0.030	109.08	'HENESSEY - WAUKOMIS 138KV CKT 1'
12WP	00NR	0	'TO->FROM'	G11_049	'GLASS MOUNTAIN - MOORELAND 138KV CKT 1'	152	0.030	108.68	'WAUKOMIS - WAUKOMIS TAP 138KV CKT 1'
17SP	00NR	0	'TO->FROM'	G11_049	'GLASS MOUNTAIN - MOORELAND 138KV CKT 1'	152	0.030	105.88	'KNOBHILL - MOORELAND 138KV CKT 1'
17SP	00NR	0	'TO->FROM'	G11_049	'GLASS MOUNTAIN - MOORELAND 138KV CKT 1'	152	0.030	105.87	'KNOBHILL (KNOBHIL4) 138/69/13.2KV TRANSFORMER CKT 1'
17SP	00NR	0	'TO->FROM'	G11_049	'CLEO CORNER - GLASS MOUNTAIN 138KV CKT 1'	153	0.030	100.46	'KNOBHILL - MOORELAND 138KV CKT 1'
17SP	00NR	0	'TO->FROM'	G11_049	'CLEO CORNER - GLASS MOUNTAIN 138KV CKT 1'	153	0.030	100.45	'KNOBHILL (KNOBHIL4) 138/69/13.2KV TRANSFORMER CKT 1'
12WP	00NR	0	'TO->FROM'	G11_049	'GLASS MOUNTAIN - MOORELAND 138KV CKT 1'	152	0.030	112.13	'DOVER SW - OKEENE 138KV CKT 1'
12WP	00NR	0	'TO->FROM'	G11_049	'GLASS MOUNTAIN - MOORELAND 138KV CKT 1'	152	0.030	109.83	'THISTLE 7 345.00 - WOODWARD DISTRICT EHV 345KV CKT 1'
12WP	00NR	0	'TO->FROM'	G11_049	'GLASS MOUNTAIN - MOORELAND 138KV CKT 1'	152	0.030	109.83	'THISTLE 7 345.00 - WOODWARD DISTRICT EHV 345KV CKT 2'
17WP	00NR	0	'TO->FROM'	G11_049	'GLASS MOUNTAIN - MOORELAND 138KV CKT 1'	152	0.030	107.10	'DOVER SW - OKEENE 138KV CKT 1'
13SP	00NR	0	'TO->FROM'	G11_049	'GLASS MOUNTAIN - MOORELAND 138KV CKT 1'	152	0.030	103.24	'MATTHEWSON 345.00 - TATONGA7 345.00 345KV CKT 1'
13SP	00NR	0	'TO->FROM'	G11_049	'GLASS MOUNTAIN - MOORELAND 138KV CKT 1'	152	0.030	103.24	'MATTHEWSON 345.00 - TATONGA7 345.00 345KV CKT 2'
13WP	00NR	0	'TO->FROM'	G11_049	'GLASS MOUNTAIN - MOORELAND 138KV CKT 1'	152	0.030	108.05	'DOVER SW - HENESSEY 138KV CKT 1'
13WP	00NR	0	'TO->FROM'	G11_049	'GLASS MOUNTAIN - MOORELAND 138KV CKT 1'	152	0.030	107.73	'HENESSEY - WAUKOMIS 138KV CKT 1'
13WP	00NR	0	'TO->FROM'	G11_049	'GLASS MOUNTAIN - MOORELAND 138KV CKT 1'	152	0.030	107.52	'WAUKOMIS - WAUKOMIS TAP 138KV CKT 1'
17WP	00NR	0	'TO->FROM'	G11_049	'GLASS MOUNTAIN - MOORELAND 138KV CKT 1'	152	0.030	104.99	'THISTLE 7 345.00 - WOODWARD DISTRICT EHV 345KV CKT 1'
17WP	00NR	0	'TO->FROM'	G11_049	'GLASS MOUNTAIN - MOORELAND 138KV CKT 1'	152	0.030	104.99	'THISTLE 7 345.00 - WOODWARD DISTRICT EHV 345KV CKT 2'
12WP	00NR	0	'FROM->TO'	G11_049	'CIMARRON - CZECH HALL 138KV CKT 1'	382	0.030	100.76	'CIMARRON - HAYMAKER 138KV CKT 1'
13WP	00NR	0	'TO->FROM'	G11_049	'GLASS MOUNTAIN - MOORELAND 138KV CKT 1'	152	0.030	111.57	'DOVER SW - OKEENE 138KV CKT 1'
13WP	00NR	0	'TO->FROM'	G11_049	'GLASS MOUNTAIN - MOORELAND 138KV CKT 1'	152	0.030	108.98	'THISTLE 7 345.00 - WOODWARD DISTRICT EHV 345KV CKT 1'
13WP	00NR	0	'TO->FROM'	G11_049	'GLASS MOUNTAIN - MOORELAND 138KV CKT 1'	152	0.030	108.98	'THISTLE 7 345.00 - WOODWARD DISTRICT EHV 345KV CKT 2'
12SP	00NR	0	'TO->FROM'	G11_049	'GLASS MOUNTAIN - MOORELAND 138KV CKT 1'	152	0.030	105.11	'CEDARDALE - MOORELAND 138KV CKT 1'
12SP	00NR	0	'TO->FROM'	G11_049	'GLASS MOUNTAIN - MOORELAND 138KV CKT 1'	152	0.030	104.91	'CEDARDALE - OKEENE 138KV CKT 1'
12G	06ALL	0		G11_049	NCONV-Iteration Limit	0	0.013	9999.00	'SPP-AEPW-25'
12SP	00NR	2	'FROM->TO'	G11_049	'MATTHEWSON 345.00 - NORTHWEST 345KV CKT 1'	1195	0.347	120.76	'DBL-MATT-CIM'
13SP	00NR	2	'FROM->TO'	G11_049	'MATTHEWSON 345.00 - NORTHWEST 345KV CKT 1'	1195	0.345	120.38	'DBL-MATT-CIM'
17WP	00NR	2	'FROM->TO'	G11_049	'MATTHEWSON 345.00 - NORTHWEST 345KV CKT 1'	1195	0.321	140.13	'DBL-MATT-CIM'
13WP	00NR	2	'FROM->TO'	G11_049	'MATTHEWSON 345.00 - NORTHWEST 345KV CKT 1'	1195	0.321	147.63	'DBL-MATT-CIM'
12G	1	2	'FROM->TO'	G11_049	'MATTHEWSON 345.00 - NORTHWEST 345KV CKT 1'	1195	0.219	123.17	'DBL-MATT-CIM'
12G	3	2	'FROM->TO'	G11_049	'MATTHEWSON 345.00 - NORTHWEST 345KV CKT 1'	1195	0.213	120.55	'DBL-MATT-CIM'
12WP	00NR	2	'FROM->TO'	G11_049	'CIMARRON - DRAPER LAKE 345KV CKT 1'	717	0.171	119.41	'ARCADIA - NORTHWEST 345KV CKT 1'
13WP	00NR	2	'FROM->TO'	G11_049	'CIMARRON - DRAPER LAKE 345KV CKT 1'	717	0.160	124.03	'ARCADIA - NORTHWEST 345KV CKT 1'
17WP	00NR	2	'FROM->TO'	G11_049	'CIMARRON - DRAPER LAKE 345KV CKT 1'	717	0.152	110.71	'ARCADIA - NORTHWEST 345KV CKT 1'
12WP	00NR	2	'FROM->TO'	G11_049	'CIMARRON - DRAPER LAKE 345KV CKT 1'	717	0.141	123.43	'LAWTON EASTSIDE - SUNNYSIDE 345KV CKT 1'
12WP	00NR	2	'FROM->TO'	G11_049	'CIMARRON - DRAPER LAKE 345KV CKT 1'	717	0.135	112.19	'MATTHEWSON 345.00 - NORTHWEST 345KV CKT 1'
13WP	00NR	2	'FROM->TO'	G11_049	'CIMARRON - DRAPER LAKE 345KV CKT 1'	717	0.132	127.80	'LAWTON EASTSIDE - SUNNYSIDE 345KV CKT 1'
12WP	00NR	2	'FROM->TO'	G11_049	'CIMARRON - DRAPER LAKE 345KV CKT 1'	717	0.129	105.74	'CIMARRON - NORTHWEST 345KV CKT 1'
12WP	00NR	2	'FROM->TO'	G11_049	'CIMARRON - DRAPER LAKE 345KV CKT 1'	717	0.128	114.69	'ARCADIA - HORSESHOE LAKE 345KV CKT 1'
12WP	00NR	2	'FROM->TO'	G11_049	'CIMARRON - DRAPER LAKE 345KV CKT 1'	717	0.128	114.68	'HORSESHOE LAKE - SEMINOLE 345KV CKT 1'
12WP	00NR	2	'FROM->TO'	G11_049	'CIMARRON - DRAPER LAKE 345KV CKT 1'	717	0.128	106.36	'LAWTON EASTSIDE - OKLAUNION 345KV CKT 1'
12WP	00NR	2	'FROM->TO'	G11_049	'CIMARRON - DRAPER LAKE 345KV CKT 1'	717	0.128	105.07	'G05-15T 345.00 - OKLAUNION 345KV CKT 1'
12WP	00NR	2	'FROM->TO'	G11_049	'CIMARRON - DRAPER LAKE 345KV CKT 1'	717	0.128	104.87	'G05-15T 345.00 - TUCO INTERCHANGE 345KV CKT 1'
17WP	00NR	2	'FROM->TO'	G11_049	'CIMARRON - DRAPER LAKE 345KV CKT 1'	717	0.128	115.56	'LAWTON EASTSIDE - SUNNYSIDE 345KV CKT 1'
12WP	00NR	2	'FROM->TO'	G11_049	'CIMARRON - DRAPER LAKE 345KV CKT 1'	717	0.127	104.95	'SOONER - WOODRING 345KV CKT 1'
12WP	00NR	2	'FROM->TO'	G11_049	'CIMARRON - DRAPER LAKE 345KV CKT 1'	717	0.127	114.88	'CLEVELAND - SOONER 345KV CKT 1'
12WP	00NR	2	'FROM->TO'	G11_049	'CIMARRON - DRAPER LAKE 345KV CKT 1'	717	0.127	105.49	'JOHNSON COUNTY - SUNNYSIDE 345KV CKT 1'
13WP	00NR	2	'FROM->TO'	G11_049	'CIMARRON - DRAPER LAKE 345KV CKT 1'	717	0.126	116.37	'MATTHEWSON 345.00 - NORTHWEST 345KV CKT 1'
12WP	00NR	2	'FROM->TO'	G11_049	'CIMARRON - DRAPER LAKE 345KV CKT 1'	717	0.126	103.88	'JOHNSON COUNTY - PITTSBURG 345KV CKT 1'
12WP	00NR	2	'FROM->TO'	G11_049	'CIMARRON - DRAPER LAKE 345KV CKT 1'	717	0.126	102.63	'PECAN CREEK - RIVERSIDE STATION 345KV CKT 1'
12WP	00NR	2	'FROM->TO'	G11_049	'CIMARRON - DRAPER LAKE 345KV CKT 1'	717	0.126	109.60	'CIMARRON - SARA 138KV CKT 1'
12WP	00NR	2	'FROM->TO'	G11_049	'CIMARRON - DRAPER LAKE 345KV CKT 1'	717	0.126	108.36	'MCCLAIN - SARA 138KV CKT 1'
12WP	00NR	2	'FROM->TO'	G11_049	'CIMARRON - DRAPER LAKE 345KV CKT 1'	717	0.126	104.33	'NORTHWEST - SPRING CREEK 345KV CKT 1'
12WP	00NR	2	'FROM->TO'	G11_049	'CIMARRON - DRAPER LAKE 345KV CKT 1'	717	0.126	104.29	'SOONER - SPRING CREEK 345KV CKT 1'
12WP	00NR	2	'FROM->TO'	G11_049	'CIMARRON - DRAPER LAKE 345KV CKT 1'	717	0.125	105.74	'MATTHEWSON 345.00 - WOODRING 345KV CKT 1'
12WP	00NR	2	'FROM->TO'	G11_049	'CIMARRON - DRAPER LAKE 345KV CKT 1'	717	0.125	104.64	'SUNSHINE CANYON - WESTMOORE 138KV CKT 1'
12WP	00NR	2	'FROM->TO'	G11_049	'CIMARRON - DRAPER LAKE 345KV CKT 1'	717	0.125	104.00	'FRANKLIN SW - WESTMOORE 138KV CKT 1'
12WP	00NR	2	'FROM->TO'	G11_049	'CIMARRON - DRAPER LAKE 345KV CKT 1'	717	0.125	108.21	'CIMARRON - CZECH HALL 138KV CKT 1'
12WP	00NR	2	'FROM->TO'	G11_049	'CIMARRON - DRAPER LAKE 345KV CKT 1'	717	0.125	107.82	'CZECH HALL - XEROX 138KV CKT 1'
12WP	00NR	2	'FROM->TO'	G11_049	'CIMARRON - DRAPER LAKE 345KV CKT 1'	717	0.125	107.80	'MORGAN - XEROX 138KV CKT 1'
12WP	00NR	2	'FROM->TO'	G11_049	'CIMARRON - DRAPER LAKE 345KV CKT 1'	717	0.125	107.69	'MORGAN - MUSTANG 138KV CKT 1'
12WP	00NR	2	'FROM->TO'	G11_049	'CIMARRON - DRAPER LAKE 345KV CKT 1'	717	0.125	109.89	'CLEVELAND - TULSA NORTH 345KV CKT 1'
12WP	00NR	2	'FROM->TO'	G11_049	'CIMARRON - DRAPER LAKE 345KV CKT 1'	717	0.125	104.51	'THISTLE 7 345.00 - WOODWARD DISTRICT EHV 345KV CKT 1'
12WP	00NR	2	'FROM->TO'	G11_049	'CIMARRON - DRAPER LAKE 345KV CKT 1'	717	0.125	104.51	'THISTLE 7 345.00 - WOODWARD DISTRICT EHV 345KV CKT 2'
12WP	00NR	2	'FROM->TO'	G11_049	'CIMARRON - DRAPER LAKE 345KV CKT 1'	717	0.125	103.70	'CLARKSVILLE - ONETA 345KV CKT 1'
12WP	00NR	2	'FROM->TO'	G11_049	'CIMARRON - DRAPER LAKE 345KV CKT 1'	717	0.125	106.34	'ANADARKO - POCASSETT 138KV CKT 1'
12WP	00NR	2	'FROM->TO'	G11_049	'CIMARRON - DRAPER LAKE 345KV CKT 1'	717	0.125	106.17	'POCASSETT - TUTTLE 138KV CKT 1'
12WP	00NR	2	'FROM->TO'	G11_049	'CIMARRON - DRAPER LAKE 345KV CKT 1'	717	0.125	105.73	'SUNSHINE CANYON - TUTTLE 138KV CKT 1'
12WP	00NR	2	'FROM->TO'	G11_049	'CIMARRON - DRAPER LAKE 345KV CKT 1'	717	0.125	104.36	'BLANCHARD - CORNVILLE 138KV CKT 1'
12WP	00NR	2	'FROM->TO'	G11_049	'CIMARRON - DRAPER LAKE 345KV CKT 1'	717	0.125	104.16	'BLANCHARD - MAUD 138KV CKT 1'
12WP	00NR	2	'FROM->TO'	G11_049	'CIMARRON - DRAPER LAKE 345KV CKT 1'	717	0.125	104.09	'GRAY CO 345.00 - SPEARVILLE 345KV CKT 1'
12WP	00NR	2	'FROM->TO'	G11_049	'CIMARRON - DRAPER LAKE 345KV CKT 1'	717	0.125	102.21	'DELAWARE - NORTHEAST STATION 345KV CKT 1'
12WP	00NR	2	'FROM->TO'	G11_049	'CIMARRON - DRAPER LAKE 345KV CKT 1'	717	0.125	103.83	'FINNEY SWITCHING STATION - STEVENSCO 345.00 345KV CKT 1'
12WP	00NR	2	'FROM->TO'	G11_049	'CIMARRON - DRAPER LAKE 345KV CKT 1'	717	0.124	106.80	'CANEYRV7 345.00 - NEOSHO 345KV CKT 1'
12WP	00NR	2	'FROM->TO'	G11_049	'CIMARRON - DRAPER LAKE 345KV CKT 1'	717	0.124	106.62	'CANEYRV7 345.00 - LATHAMS7 345.00 345KV CKT 1'
12WP	00NR	2	'FROM->TO'	G11_049	'CIMARRON - DRAPER LAKE 345KV CKT 1'	717	0.124	106.11	'LATHAMS7 345.00 - ROSE HILL 345KV CKT 1'
12WP	00NR	2	'FROM->TO'	G11_049	'CIMARRON - DRAPER LAKE 345KV CKT 1'	717	0.124	103.81	'BEAVER CO 345.00 - GRAY CO 345.00 345KV CKT 1'

SEASON	GROUP	SCENARIO	DIRECTION	SOURCE	MONITORED ELEMENT	RATE B (MVA)	TDF	(%MVA) LOADING	CONTINGENCY
12WP	00NR	2	'FROM->TO'	G11_049	'CIMARRON - DRAPER LAKE 345KV CKT 1'	717	0.124	104.86	'NORTHEAST STATION - ONETA 345KV CKT 1'
12WP	00NR	2	'FROM->TO'	G11_049	'CIMARRON - DRAPER LAKE 345KV CKT 1'	717	0.124	101.72	'OAKCREEK - WILD MARY 138KV CKT 1'
12WP	00NR	2	'FROM->TO'	G11_049	'CIMARRON - DRAPER LAKE 345KV CKT 1'	717	0.124	101.44	'AIRDEPT4 138.00 - WILD MARY 138KV CKT 1'
12WP	00NR	2	'FROM->TO'	G11_049	'CIMARRON - DRAPER LAKE 345KV CKT 1'	717	0.124	101.43	'AIRDEPT4 138.00 - GM 138KV CKT 1'
12WP	00NR	2	'FROM->TO'	G11_049	'CIMARRON - DRAPER LAKE 345KV CKT 1'	717	0.124	101.18	'DRAPER LAKE - GM 138KV CKT 1'
12WP	00NR	2	'FROM->TO'	G11_049	'CIMARRON - DRAPER LAKE 345KV CKT 1'	717	0.124	104.64	'MINGO - RED WILLOW 345KV CKT 1'
12WP	00NR	2	'FROM->TO'	G11_049	'CIMARRON - DRAPER LAKE 345KV CKT 1'	717	0.124	100.23	'DRAPER LAKE (DRAPER2) 345/138/13.8KV TRANSFORMER CKT 1'
12WP	00NR	2	'FROM->TO'	G11_049	'CIMARRON - DRAPER LAKE 345KV CKT 1'	717	0.124	100.00	'DRAPER LAKE (DRAPER3) 345/138/13.8KV TRANSFORMER CKT 1'
12WP	00NR	2	'FROM->TO'	G11_049	'CIMARRON - DRAPER LAKE 345KV CKT 1'	717	0.124	100.00	'DRAPER LAKE (DRAPER4) 345/138/13.8KV TRANSFORMER CKT 1'
12WP	00NR	2	'FROM->TO'	G11_049	'CIMARRON - DRAPER LAKE 345KV CKT 1'	717	0.124	104.57	'MINGO - SETAB 345KV CKT 1'
12WP	00NR	2	'FROM->TO'	G11_049	'CIMARRON - DRAPER LAKE 345KV CKT 1'	717	0.124	102.29	'HOLLYWOOD - MIDWEST TAP 138KV CKT 1'
12WP	00NR	2	'FROM->TO'	G11_049	'CIMARRON - DRAPER LAKE 345KV CKT 1'	717	0.124	104.68	'THISTLE 7 345.00 - WICHITA 345KV CKT 1'
12WP	00NR	2	'FROM->TO'	G11_049	'CIMARRON - DRAPER LAKE 345KV CKT 1'	717	0.124	104.68	'THISTLE 7 345.00 - WICHITA 345KV CKT 2'
12WP	00NR	2	'FROM->TO'	G11_049	'CIMARRON - DRAPER LAKE 345KV CKT 1'	717	0.124	104.72	'36 & MERIDIAN - PENNSYLVANIA 138KV CKT 1'
12WP	00NR	2	'FROM->TO'	G11_049	'CIMARRON - DRAPER LAKE 345KV CKT 1'	717	0.124	104.80	'CIMARRON - HAYMAKER 138KV CKT 1'
12WP	00NR	2	'FROM->TO'	G11_049	'CIMARRON - DRAPER LAKE 345KV CKT 1'	717	0.124	104.67	'DIVISION AVE - HAYMAKER 138KV CKT 1'
12WP	00NR	2	'FROM->TO'	G11_049	'CIMARRON - DRAPER LAKE 345KV CKT 1'	717	0.124	104.39	'CLASSEN - ROBINSON 138KV CKT 1'
12WP	00NR	2	'FROM->TO'	G11_049	'CIMARRON - DRAPER LAKE 345KV CKT 1'	717	0.124	104.10	'LIGHTNING CREEK - ROBINSON 138KV CKT 1'
12WP	00NR	2	'FROM->TO'	G11_049	'CIMARRON - DRAPER LAKE 345KV CKT 1'	717	0.124	103.95	'LIGHTNING CREEK - TROSPER 138KV CKT 1'
17WP	00NR	2	'FROM->TO'	G11_049	'CIMARRON - DRAPER LAKE 345KV CKT 1'	717	0.124	106.61	'MATTHEWSON 345.00 - NORTHWEST 345KV CKT 1'
12WP	00NR	2	'FROM->TO'	G11_049	'CIMARRON - DRAPER LAKE 345KV CKT 1'	717	0.123	104.17	'HOLCOMB - SETAB 345KV CKT 1'
12WP	00NR	2	'FROM->TO'	G11_049	'CIMARRON - DRAPER LAKE 345KV CKT 1'	717	0.123	100.95	'CHAMBER SPRINGS - CLARKSVILLE 345KV CKT 1'
12WP	00NR	2	'FROM->TO'	G11_049	'CIMARRON - DRAPER LAKE 345KV CKT 1'	717	0.123	104.34	'MCCLAIN - PLEASANT VALLEY 138KV CKT 1'
12WP	00NR	2	'FROM->TO'	G11_049	'CIMARRON - DRAPER LAKE 345KV CKT 1'	717	0.123	109.29	'CIMARRON (CIMARON1) 345/138/13.8KV TRANSFORMER CKT 1'
12WP	00NR	2	'FROM->TO'	G11_049	'CIMARRON - DRAPER LAKE 345KV CKT 1'	717	0.123	102.14	'MAUD - SEMINOLE 138KV CKT 1'
12WP	00NR	2	'FROM->TO'	G11_049	'CIMARRON - DRAPER LAKE 345KV CKT 1'	717	0.123	102.38	'FOREST HILL - MAUD 138KV CKT 1'
12WP	00NR	2	'FROM->TO'	G11_049	'CIMARRON - DRAPER LAKE 345KV CKT 1'	717	0.123	109.07	'CIMARRON (CIMARON2) 345/138/13.8KV TRANSFORMER CKT 1'
12WP	00NR	2	'FROM->TO'	G11_049	'CIMARRON - DRAPER LAKE 345KV CKT 1'	717	0.123	107.02	'NORTHWEST (NORTWST2) 345/138/13.8KV TRANSFORMER CKT 1'
12WP	00NR	2	'FROM->TO'	G11_049	'CIMARRON - DRAPER LAKE 345KV CKT 1'	717	0.123	102.66	'MUSKOGEE - PECAN CREEK 345KV CKT 2'
12WP	00NR	2	'FROM->TO'	G11_049	'CIMARRON - DRAPER LAKE 345KV CKT 1'	717	0.123	102.75	'FOREST HILL - SQUIRL CREEK 138KV CKT 1'
12WP	00NR	2	'FROM->TO'	G11_049	'CIMARRON - DRAPER LAKE 345KV CKT 1'	717	0.123	104.06	'BENTON - WICHITA 345KV CKT 1'
12WP	00NR	2	'FROM->TO'	G11_049	'CIMARRON - DRAPER LAKE 345KV CKT 1'	717	0.123	104.31	'TULSA NORTH - WEKIWA 345KV CKT 1'
12WP	00NR	2	'FROM->TO'	G11_049	'CIMARRON - DRAPER LAKE 345KV CKT 1'	717	0.123	103.71	'SAPULPA ROAD - WEKIWA 345KV CKT 1'
12WP	00NR	2	'FROM->TO'	G11_049	'CIMARRON - DRAPER LAKE 345KV CKT 1'	717	0.123	101.30	'FT SMITH - MUSKOGEE 345KV CKT 1'
12WP	00NR	2	'FROM->TO'	G11_049	'CIMARRON - DRAPER LAKE 345KV CKT 1'	717	0.123	104.43	'KETCH TAP - NORTHWEST 138KV CKT 1'
12WP	00NR	2	'FROM->TO'	G11_049	'CIMARRON - DRAPER LAKE 345KV CKT 1'	717	0.123	100.98	'FRANKLIN SW - MIDWEST TAP 138KV CKT 1'
12WP	00NR	2	'FROM->TO'	G11_049	'CIMARRON - DRAPER LAKE 345KV CKT 1'	717	0.123	104.70	'QUAIL CREEK - SKYLINE 138KV CKT 1'
12WP	00NR	2	'FROM->TO'	G11_049	'CIMARRON - DRAPER LAKE 345KV CKT 1'	717	0.123	106.23	'NORTHWEST (NORTWST3) 345/138/13.8KV TRANSFORMER CKT 1'
12WP	00NR	2	'FROM->TO'	G11_049	'CIMARRON - DRAPER LAKE 345KV CKT 1'	717	0.123	104.73	'LACYGNE - NEOSHO 345KV CKT 1'
12WP	00NR	2	'FROM->TO'	G11_049	'CIMARRON - DRAPER LAKE 345KV CKT 1'	717	0.123	105.14	'HORSESHOE LAKE - JONES TAP 138KV CKT 1'
12WP	00NR	2	'FROM->TO'	G11_049	'CIMARRON - DRAPER LAKE 345KV CKT 1'	717	0.123	105.23	'AXTELL - POST ROCK 345KV CKT 1'
12WP	00NR	2	'FROM->TO'	G11_049	'CIMARRON - DRAPER LAKE 345KV CKT 1'	717	0.123	103.98	'MARSHALL - WOODRING 138KV CKT 1'
12WP	00NR	2	'FROM->TO'	G11_049	'CIMARRON - DRAPER LAKE 345KV CKT 1'	717	0.123	103.97	'COTTONWOOD CREEK - MARSHALL 138KV CKT 1'
12WP	00NR	2	'FROM->TO'	G11_049	'CIMARRON - DRAPER LAKE 345KV CKT 1'	717	0.123	105.09	'G11-17T 345.00 - POST ROCK 345KV CKT 1'
12WP	00NR	2	'FROM->TO'	G11_049	'CIMARRON - DRAPER LAKE 345KV CKT 1'	717	0.123	102.10	'PARK LANE - SEMINOLE 138KV CKT 1'
12WP	00NR	2	'FROM->TO'	G11_049	'CIMARRON - DRAPER LAKE 345KV CKT 1'	717	0.123	102.67	'ARBUCKLE - VANOSS 138KV CKT 1'
12WP	00NR	2	'FROM->TO'	G11_049	'CIMARRON - DRAPER LAKE 345KV CKT 1'	717	0.123	101.98	'DRAPER LAKE - SOONER TAP 138KV CKT 1'
12WP	00NR	2	'FROM->TO'	G11_049	'CIMARRON - DRAPER LAKE 345KV CKT 1'	717	0.123	104.80	'MEMORIAL - SKYLINE 138KV CKT 1'
12WP	00NR	2	'FROM->TO'	G11_049	'CIMARRON - DRAPER LAKE 345KV CKT 1'	717	0.123	104.63	'CORN TAP - PAOLI 138KV CKT 1'
12WP	00NR	2	'FROM->TO'	G11_049	'CIMARRON - DRAPER LAKE 345KV CKT 1'	717	0.123	103.96	'CIVIT - PAOLI 138KV CKT 1'
12WP	00NR	2	'FROM->TO'	G11_049	'CIMARRON - DRAPER LAKE 345KV CKT 1'	717	0.123	103.91	'CIVIT - STRATFORD 138KV CKT 1'
12WP	00NR	2	'FROM->TO'	G11_049	'CIMARRON - DRAPER LAKE 345KV CKT 1'	717	0.123	103.86	'OIL CENTER - STRATFORD 138KV CKT 1'
12WP	00NR	2	'FROM->TO'	G11_049	'CIMARRON - DRAPER LAKE 345KV CKT 1'	717	0.123	103.79	'LATTA JCT - OIL CENTER 138KV CKT 1'
12WP	00NR	2	'FROM->TO'	G11_049	'CIMARRON - DRAPER LAKE 345KV CKT 1'	717	0.123	104.61	'HUGO - SUNNYSIDE 345KV CKT 1'
12WP	00NR	2	'FROM->TO'	G11_049	'CIMARRON - DRAPER LAKE 345KV CKT 1'	717	0.123	104.44	'DIVISION AVE - LAKESIDE 138KV CKT 1'
12WP	00NR	2	'FROM->TO'	G11_049	'CIMARRON - DRAPER LAKE 345KV CKT 1'	717	0.123	104.31	'HEFNER - LAKESIDE 138KV CKT 1'
12WP	00NR	2	'FROM->TO'	G11_049	'CIMARRON - DRAPER LAKE 345KV CKT 1'	717	0.123	103.81	'CLINTON AIR FORCE BASE TAP - ELK CITY 138KV CKT 1'
12WP	00NR	2	'FROM->TO'	G11_049	'CIMARRON - DRAPER LAKE 345KV CKT 1'	717	0.123	103.80	'CLINTON AIR FORCE BASE TAP - HOBART JUNCTION 138KV CKT 1'
12WP	00NR	2	'FROM->TO'	G11_049	'CIMARRON - DRAPER LAKE 345KV CKT 1'	717	0.123	103.99	'SPP-SWPS-03'
12WP	00NR	2	'FROM->TO'	G11_049	'CIMARRON - DRAPER LAKE 345KV CKT 1'	717	0.123	102.79	'PAOLI - SEMINOLE 138KV CKT 1'
12WP	00NR	2	'FROM->TO'	G11_049	'CIMARRON - DRAPER LAKE 345KV CKT 1'	717	0.123	104.07	'ELK CITY 230KV - SWEETWATER 230KV CKT 1'
12WP	00NR	2	'FROM->TO'	G11_049	'CIMARRON - DRAPER LAKE 345KV CKT 1'	717	0.123	104.07	'ELK CITY 230KV (ELKCTY-6) 230/138/13.8KV TRANSFORMER CKT 1'
12WP	00NR	2	'FROM->TO'	G11_049	'CIMARRON - DRAPER LAKE 345KV CKT 1'	717	0.123	103.96	'GRAPEVINE INTERCHANGE - STATELINE INTERCHANGE 230KV CKT 1'
12WP	00NR	2	'FROM->TO'	G11_049	'CIMARRON - DRAPER LAKE 345KV CKT 1'	717	0.123	103.89	'SPP-SWPS-02'
12WP	00NR	2	'FROM->TO'	G11_049	'CIMARRON - DRAPER LAKE 345KV CKT 1'	717	0.123	104.21	'SWISSVALE - WEST GARDNER 345KV CKT 1'
12WP	00NR	2	'FROM->TO'	G11_049	'CIMARRON - DRAPER LAKE 345KV CKT 1'	717	0.123	102.57	'AI12'
12WP	00NR	2	'FROM->TO'	G11_049	'CIMARRON - DRAPER LAKE 345KV CKT 1'	717	0.123	102.57	'BROOKLINE - SUB 383 - MONETT 345KV CKT 1'
12WP	00NR	2	'FROM->TO'	G11_049	'CIMARRON - DRAPER LAKE 345KV CKT 1'	717	0.123	102.57	'FLINT CREEK - SUB 383 - MONETT 345KV CKT 1'
12WP	00NR	2	'FROM->TO'	G11_049	'CIMARRON - DRAPER LAKE 345KV CKT 1'	717	0.123	106.08	'REDBUD - RIVERSIDE STATION 345KV CKT 1'
12WP	00NR	2	'FROM->TO'	G11_049	'CIMARRON - DRAPER LAKE 345KV CKT 1'	717	0.123	104.30	'OVERTON-TRF'
12WP	00NR	2	'FROM->TO'	G11_049	'CIMARRON - DRAPER LAKE 345KV CKT 1'	717	0.123	102.71	'MAUD - SEMINOLE 138KV CKT 2'
12WP	00NR	2	'FROM->TO'	G11_049	'CIMARRON - DRAPER LAKE 345KV CKT 1'	717	0.123	104.38	'7OVERTON 345.00 - SIBLEY 345KV CKT 1'
13WP	00NR	2	'FROM->TO'	G11_049	'CIMARRON - DRAPER LAKE 345KV CKT 1'	717	0.123	111.40	'DBL-THIS-WWR'
12WP	00NR	2	'FROM->TO'	G11_049	'CIMARRON - DRAPER LAKE 345KV CKT 1'	717	0.123	104.35	'EMPORIA ENERGY CENTER - WICHITA 345KV CKT 1'
12WP	00NR	2	'FROM->TO'	G11_049	'CIMARRON - DRAPER LAKE 345KV CKT 1'	717	0.123	104.09	'KETCH - KETCH TAP 138KV CKT 1'
12WP	00NR	2	'FROM->TO'	G11_049	'CIMARRON - DRAPER LAKE 345KV CKT 1'	717	0.123	103.75	'ANADARKO - BLANCHARD 69KV CKT 1'
12WP	00NR	2	'FROM->TO'	G11_049	'CIMARRON - DRAPER LAKE 345KV CKT 1'	717	0.123	103.71	'JEFFREY ENERGY CENTER - SUMMIT 345KV CKT 1'
12WP	00NR	2	'FROM->TO'	G11_049	'CIMARRON - DRAPER LAKE 345KV CKT 1'	717	0.123	106.90	'ANDERSONCO 345.00 - LACYGNE 345KV CKT 1'

SEASON	GROUP	SCENARIO	DIRECTION	SOURCE	MONITORED ELEMENT	RATE B (MVA)	TDF	(%MVA) LOADING	CONTINGENCY
12WP	00NR	2	'FROM->TO'	G11_049	'CIMARRON - DRAPER LAKE 345KV CKT 1'	717	0.123	106.77	'ANDERSONCO 345.00 - WOLF CREEK 345KV CKT 1'
12WP	00NR	2	'FROM->TO'	G11_049	'CIMARRON - DRAPER LAKE 345KV CKT 1'	717	0.123	103.73	'HEALDTON - LOCO 138KV CKT 1'
12WP	00NR	2	'FROM->TO'	G11_049	'CIMARRON - DRAPER LAKE 345KV CKT 1'	717	0.123	103.90	'DAYTON - MUSTANG 138KV CKT 1'
12WP	00NR	2	'FROM->TO'	G11_049	'CIMARRON - DRAPER LAKE 345KV CKT 1'	717	0.123	103.89	'DAYTON - HOBBY LOBBY 138KV CKT 1'
12WP	00NR	2	'FROM->TO'	G11_049	'CIMARRON - DRAPER LAKE 345KV CKT 1'	717	0.123	103.84	'36 & MERIDIAN - HOBBY LOBBY 138KV CKT 1'
12WP	00NR	2	'FROM->TO'	G11_049	'CIMARRON - DRAPER LAKE 345KV CKT 1'	717	0.123	102.69	'SEMINOLE - VANOSS 138KV CKT 1'
12WP	00NR	2	'FROM->TO'	G11_049	'CIMARRON - DRAPER LAKE 345KV CKT 1'	717	0.123	104.00	'COMANCHE - LOCO 138KV CKT 1'
12WP	00NR	2	'FROM->TO'	G11_049	'CIMARRON - DRAPER LAKE 345KV CKT 1'	717	0.123	103.84	'CLEO CORNER - MEN TAP 138KV CKT 1'
12WP	00NR	2	'FROM->TO'	G11_049	'CIMARRON - DRAPER LAKE 345KV CKT 1'	717	0.123	103.83	'IMO TAP - MEN TAP 138KV CKT 1'
12WP	00NR	2	'FROM->TO'	G11_049	'CIMARRON - DRAPER LAKE 345KV CKT 1'	717	0.123	103.92	'ROSE HILL - SUMNERCO 345.00 345KV CKT 1'
12WP	00NR	2	'FROM->TO'	G11_049	'CIMARRON - DRAPER LAKE 345KV CKT 1'	717	0.123	104.93	'WRTOD400'
12WP	00NR	2	'FROM->TO'	G11_049	'CIMARRON - DRAPER LAKE 345KV CKT 1'	717	0.123	104.84	'HOYT - JEFFREY ENERGY CENTER 345KV CKT 1'
12WP	00NR	2	'FROM->TO'	G11_049	'CIMARRON - DRAPER LAKE 345KV CKT 1'	717	0.123	104.43	'HOYT - STRANGER CREEK 345KV CKT 1'
12WP	00NR	2	'FROM->TO'	G11_049	'CIMARRON - DRAPER LAKE 345KV CKT 1'	717	0.123	103.73	'EL RENO SW - MUSTANG 69KV CKT 1'
12WP	00NR	2	'FROM->TO'	G11_049	'CIMARRON - DRAPER LAKE 345KV CKT 1'	717	0.123	103.95	'EMPORIA ENERGY CENTER - SWISSVALE 345KV CKT 1'
12WP	00NR	2	'FROM->TO'	G11_049	'CIMARRON - DRAPER LAKE 345KV CKT 1'	717	0.123	103.84	'CLEO CORNER - GLASS MOUNTAIN 138KV CKT 1'
12WP	00NR	2	'FROM->TO'	G11_049	'CIMARRON - DRAPER LAKE 345KV CKT 1'	717	0.123	103.82	'GLASS MOUNTAIN - MOORELAND 138KV CKT 1'
12WP	00NR	2	'FROM->TO'	G11_049	'CIMARRON - DRAPER LAKE 345KV CKT 1'	717	0.123	104.19	'HUGO - VALLIANT 345KV CKT 1'
12WP	00NR	2	'FROM->TO'	G11_049	'CIMARRON - DRAPER LAKE 345KV CKT 1'	717	0.123	103.82	'RENO COUNTY - SUMMIT 345KV CKT 1'
12WP	00NR	2	'FROM->TO'	G11_049	'CIMARRON - DRAPER LAKE 345KV CKT 1'	717	0.123	103.76	'BROOKLINE - MORGAN 345KV CKT 1'
12WP	00NR	2	'FROM->TO'	G11_049	'CIMARRON - DRAPER LAKE 345KV CKT 1'	717	0.123	103.88	'HAMMETT TAP - HORSESHOE LAKE 138KV CKT 1'
12WP	00NR	2	'FROM->TO'	G11_049	'CIMARRON - DRAPER LAKE 345KV CKT 1'	717	0.123	104.02	'AXTELL - PAULINE 345KV CKT 1'
12WP	00NR	2	'FROM->TO'	G11_049	'CIMARRON - DRAPER LAKE 345KV CKT 1'	717	0.123	104.31	'LONEOAK - NORTHWEST 138KV CKT 1'
12WP	00NR	2	'FROM->TO'	G11_049	'CIMARRON - DRAPER LAKE 345KV CKT 1'	717	0.123	104.27	'GRAND ISLAND - SWEETWATER 345KV CKT 1'
12WP	00NR	2	'FROM->TO'	G11_049	'CIMARRON - DRAPER LAKE 345KV CKT 1'	717	0.123	103.99	'LONEOAK - QUAIL CREEK 138KV CKT 1'
12WP	00NR	2	'FROM->TO'	G11_049	'CIMARRON - DRAPER LAKE 345KV CKT 1'	717	0.123	103.66	'CHERRY CREEK - PLEASANT VALLEY 138KV CKT 1'
12WP	00NR	2	'FROM->TO'	G11_049	'CIMARRON - DRAPER LAKE 345KV CKT 1'	717	0.123	103.86	'MOORE - PAULINE 345KV CKT 1'
12WP	00NR	2	'FROM->TO'	G11_049	'CIMARRON - DRAPER LAKE 345KV CKT 1'	717	0.123	102.29	'KEO EHV - WEST MEMPHIS 500 500KV CKT 1'
12WP	00NR	2	'FROM->TO'	G11_049	'CIMARRON - DRAPER LAKE 345KV CKT 1'	717	0.123	103.69	'5LOCSTGV - MAID 161KV CKT 1'
12WP	00NR	2	'FROM->TO'	G11_049	'CIMARRON - DRAPER LAKE 345KV CKT 1'	717	0.123	103.68	'5CDRCRST 161.00 - 5LOCSTGV 161KV CKT 1'
12WP	00NR	2	'FROM->TO'	G11_049	'CIMARRON - DRAPER LAKE 345KV CKT 1'	717	0.123	104.47	'7JASPER 345.00 - MORGAN 345KV CKT 1'
12WP	00NR	2	'FROM->TO'	G11_049	'CIMARRON - DRAPER LAKE 345KV CKT 1'	717	0.123	103.82	'OUMED 4 - STONEWALL 138KV CKT 1'
12WP	00NR	2	'FROM->TO'	G11_049	'CIMARRON - DRAPER LAKE 345KV CKT 1'	717	0.123	103.74	'OUMED 4 - PARK PLACE 138KV CKT 1'
12WP	00NR	2	'FROM->TO'	G11_049	'CIMARRON - DRAPER LAKE 345KV CKT 1'	717	0.123	103.70	'COUNCIL - MUSTANG 138KV CKT 1'
12WP	00NR	2	'FROM->TO'	G11_049	'CIMARRON - DRAPER LAKE 345KV CKT 1'	717	0.123	102.66	'AMRN_OUTS5'
12WP	00NR	2	'FROM->TO'	G11_049	'CIMARRON - DRAPER LAKE 345KV CKT 1'	717	0.123	104.03	'CLEVELAND (CLVAUTO1) 345/138/13.8KV TRANSFORMER CKT 1'
12WP	00NR	2	'FROM->TO'	G11_049	'CIMARRON - DRAPER LAKE 345KV CKT 1'	717	0.123	102.65	'G11_040_TAP 138.00 - POOLEVILLE 138KV CKT 1'
12WP	00NR	2	'FROM->TO'	G11_049	'CIMARRON - DRAPER LAKE 345KV CKT 1'	717	0.123	104.72	'7JASPER 345.00 - NEOSHO 345KV CKT 1'
12WP	00NR	2	'FROM->TO'	G11_049	'CIMARRON - DRAPER LAKE 345KV CKT 1'	717	0.123	102.24	'DELL 500 - INDEPENDENCE 500KV CKT 1'
12WP	00NR	2	'FROM->TO'	G11_049	'CIMARRON - DRAPER LAKE 345KV CKT 1'	717	0.123	103.93	'ANADARKO - GEORGIA 138KV CKT 1'
12WP	00NR	2	'FROM->TO'	G11_049	'CIMARRON - DRAPER LAKE 345KV CKT 1'	717	0.123	103.88	'FLETCHER - GEORGIA 138KV CKT 1'
12WP	00NR	2	'FROM->TO'	G11_049	'CIMARRON - DRAPER LAKE 345KV CKT 1'	717	0.123	104.16	'DIVISION AVE - MUSTANG 138KV CKT 1'
12WP	00NR	2	'FROM->TO'	G11_049	'CIMARRON - DRAPER LAKE 345KV CKT 1'	717	0.123	103.75	'EMPIRE - FLETCHER 138KV CKT 1'
12WP	00NR	2	'FROM->TO'	G11_049	'CIMARRON - DRAPER LAKE 345KV CKT 1'	717	0.123	103.69	'COMANCHE - EMPIRE 138KV CKT 1'
12WP	00NR	2	'FROM->TO'	G11_049	'CIMARRON - DRAPER LAKE 345KV CKT 1'	717	0.123	103.89	'EL RENO - ROMAN NOSE 138KV CKT 1'
12WP	00NR	2	'FROM->TO'	G11_049	'CIMARRON - DRAPER LAKE 345KV CKT 1'	717	0.123	103.85	'ROMAN NOSE - SOUTHARD 138KV CKT 1'
12WP	00NR	2	'FROM->TO'	G11_049	'CIMARRON - DRAPER LAKE 345KV CKT 1'	717	0.123	103.83	'DEWEY - SOUTHARD 138KV CKT 1'
12WP	00NR	2	'FROM->TO'	G11_049	'CIMARRON - DRAPER LAKE 345KV CKT 1'	717	0.123	103.80	'NEOSHO (NEOSHO2X) 345/161/13.8KV TRANSFORMER CKT 1'
12WP	00NR	2	'FROM->TO'	G11_049	'CIMARRON - DRAPER LAKE 345KV CKT 1'	717	0.123	103.71	'HEFNER - TULSA 138KV CKT 1'
12WP	00NR	2	'FROM->TO'	G11_049	'CIMARRON - DRAPER LAKE 345KV CKT 1'	717	0.123	104.18	'NORTHWEST - PANTHER 138KV CKT 1'
12WP	00NR	2	'FROM->TO'	G11_049	'CIMARRON - DRAPER LAKE 345KV CKT 1'	717	0.123	104.15	'PANTHER - SILVER LAKE 138KV CKT 1'
12WP	00NR	2	'FROM->TO'	G11_049	'CIMARRON - DRAPER LAKE 345KV CKT 1'	717	0.123	103.99	'AI43'
12WP	00NR	2	'FROM->TO'	G11_049	'CIMARRON - DRAPER LAKE 345KV CKT 1'	717	0.123	103.99	'7LUTESVIL 345.00 - 7ST FRANC 345.00 345KV CKT 1'
12WP	00NR	2	'FROM->TO'	G11_049	'CIMARRON - DRAPER LAKE 345KV CKT 1'	717	0.123	102.64	'ARKANSAS NUCLEAR ONE - PLEASANT HILL 500KV CKT 1'
12WP	00NR	2	'FROM->TO'	G11_049	'CIMARRON - DRAPER LAKE 345KV CKT 1'	717	0.122	103.89	'CLINTON - MONTROSE 161KV CKT 1'
12WP	00NR	2	'FROM->TO'	G11_049	'CIMARRON - DRAPER LAKE 345KV CKT 1'	717	0.122	103.69	'AI13'
12WP	00NR	2	'FROM->TO'	G11_049	'CIMARRON - DRAPER LAKE 345KV CKT 1'	717	0.122	102.65	'OSAGE - WEBB CITY TAP 138KV CKT 1'
12WP	00NR	2	'FROM->TO'	G11_049	'CIMARRON - DRAPER LAKE 345KV CKT 1'	717	0.122	102.47	'FAIRFAX TAP - WEBB CITY TAP 138KV CKT 1'
12WP	00NR	2	'FROM->TO'	G11_049	'CIMARRON - DRAPER LAKE 345KV CKT 1'	717	0.122	103.68	'FRANKS - SALEM 345KV CKT 1'
12WP	00NR	2	'FROM->TO'	G11_049	'CIMARRON - DRAPER LAKE 345KV CKT 1'	717	0.122	104.10	'WEBRE - WELLS 500KV CKT 1'
12WP	00NR	2	'FROM->TO'	G11_049	'CIMARRON - DRAPER LAKE 345KV CKT 1'	717	0.122	103.68	'ATC_B2_8E2'
12WP	00NR	2	'FROM->TO'	G11_049	'CIMARRON - DRAPER LAKE 345KV CKT 1'	717	0.122	103.82	'ATCHSNT3 345.00 - BOONEVILLE 345KV CKT 1'
12WP	00NR	2	'FROM->TO'	G11_049	'CIMARRON - DRAPER LAKE 345KV CKT 1'	717	0.122	103.76	'ATCHSNT3 345.00 - COOPER 345KV CKT 1'
12WP	00NR	2	'FROM->TO'	G11_049	'CIMARRON - DRAPER LAKE 345KV CKT 1'	717	0.122	102.80	'ROSE HILL - WOLF CREEK 345KV CKT 1'
12WP	00NR	2	'FROM->TO'	G11_049	'CIMARRON - DRAPER LAKE 345KV CKT 1'	717	0.122	104.23	'FAIRFAX TAP - SHIDLER 138KV CKT 1'
12WP	00NR	2	'FROM->TO'	G11_049	'CIMARRON - DRAPER LAKE 345KV CKT 1'	717	0.122	104.20	'SHIDLER - WEST PAWHUSKA 138KV CKT 1'
12WP	00NR	2	'FROM->TO'	G11_049	'CIMARRON - DRAPER LAKE 345KV CKT 1'	717	0.122	104.19	'PAWHUSKA TAP - WEST PAWHUSKA 138KV CKT 1'
12WP	00NR	2	'FROM->TO'	G11_049	'CIMARRON - DRAPER LAKE 345KV CKT 1'	717	0.122	104.15	'DOMES - PAWHUSKA TAP 138KV CKT 1'
12WP	00NR	2	'FROM->TO'	G11_049	'CIMARRON - DRAPER LAKE 345KV CKT 1'	717	0.122	104.12	'DOMES - MOUND ROAD 138KV CKT 1'
12WP	00NR	2	'FROM->TO'	G11_049	'CIMARRON - DRAPER LAKE 345KV CKT 1'	717	0.122	103.73	'SHERIDAN EHV - WHITE BLUFF 500KV CKT 1'
12WP	00NR	2	'FROM->TO'	G11_049	'CIMARRON - DRAPER LAKE 345KV CKT 1'	717	0.122	102.74	'DISCVRY - FOSTER 138KV CKT 1'
12WP	00NR	2	'FROM->TO'	G11_049	'CIMARRON - DRAPER LAKE 345KV CKT 1'	717	0.122	102.57	'DISCVRY - OAKCREEK 138KV CKT 1'
12WP	00NR	2	'FROM->TO'	G11_049	'CIMARRON - DRAPER LAKE 345KV CKT 1'	717	0.122	101.99	'LYDIA - WELSH 345KV CKT 1'
12WP	00NR	2	'FROM->TO'	G11_049	'CIMARRON - DRAPER LAKE 345KV CKT 1'	717	0.122	101.38	'LYDIA - VALLIANT 345KV CKT 1'
12WP	00NR	2	'FROM->TO'	G11_049	'CIMARRON - DRAPER LAKE 345KV CKT 1'	717	0.122	104.11	'8DANIEL 500.00 - MCKNIGHT 500KV CKT 1'
12WP	00NR	2	'FROM->TO'	G11_049	'CIMARRON - DRAPER LAKE 345KV CKT 1'	717	0.122	102.74	'BAXTER WILSON SES - RAY BRASWELL SES 500KV CKT 1'
12WP	00NR	2	'FROM->TO'	G11_049	'CIMARRON - DRAPER LAKE 345KV CKT 1'	717	0.122	104.10	'DOLET HILLS - SOUTHWEST SHREVEPORT 345KV CKT 1'
12WP	00NR	2	'FROM->TO'	G11_049	'CIMARRON - DRAPER LAKE 345KV CKT 1'	717	0.122	103.95	'HAMMETT TAP - HAMMETT2 138KV CKT 1'

SEASON	GROUP	SCENARIO	DIRECTION	SOURCE	MONITORED ELEMENT	RATE B (MVA)	TDF	(%MVA) LOADING	CONTINGENCY
12WP	00NR	2	'FROM->TO'	G11_049	'CIMARRON - DRAPER LAKE 345KV CKT 1'	717	0.122	103.94	'7SAREPT 345.00 - LONGWOOD 345KV CKT 1'
12WP	00NR	2	'FROM->TO'	G11_049	'CIMARRON - DRAPER LAKE 345KV CKT 1'	717	0.122	103.84	'HAMMETT2 - MEEKER 138KV CKT 1'
12WP	00NR	2	'FROM->TO'	G11_049	'CIMARRON - DRAPER LAKE 345KV CKT 1'	717	0.122	102.66	'LEBROCK - TENASKA RUSK COUNTY 345KV CKT 1'
12WP	00NR	2	'FROM->TO'	G11_049	'CIMARRON - DRAPER LAKE 345KV CKT 1'	717	0.122	102.65	'CROCKETT - TENASKA RUSK COUNTY 345KV CKT 1'
12WP	00NR	2	'FROM->TO'	G11_049	'CIMARRON - DRAPER LAKE 345KV CKT 1'	717	0.122	102.41	'DOLET HILLS 345/230KV TRANSFORMER CKT 1'
12WP	00NR	2	'FROM->TO'	G11_049	'CIMARRON - DRAPER LAKE 345KV CKT 1'	717	0.122	102.11	'NORTHWEST TEXARKANA - VALLIANT 345KV CKT 1'
12WP	00NR	2	'FROM->TO'	G11_049	'CIMARRON - DRAPER LAKE 345KV CKT 1'	717	0.122	104.04	'7SAREPT 345.00 - ELDORADO EHV 345KV CKT 1'
12WP	00NR	2	'FROM->TO'	G11_049	'CIMARRON - DRAPER LAKE 345KV CKT 1'	717	0.122	104.04	'A222'
12WP	00NR	2	'FROM->TO'	G11_049	'CIMARRON - DRAPER LAKE 345KV CKT 1'	717	0.122	104.04	'ELDORADO EHV 500/345KV TRANSFORMER CKT 1'
12WP	00NR	2	'FROM->TO'	G11_049	'CIMARRON - DRAPER LAKE 345KV CKT 1'	717	0.122	102.47	'WELSH - WILKES 345KV CKT 1'
12WP	00NR	2	'FROM->TO'	G11_049	'CIMARRON - DRAPER LAKE 345KV CKT 1'	717	0.122	112.24	'GEN336821 1-GRAND GULF UNIT'
12WP	00NR	2	'FROM->TO'	G11_049	'CIMARRON - DRAPER LAKE 345KV CKT 1'	717	0.122	111.75	'GEN336153 1-WATERFORD UNIT#3'
12WP	00NR	2	'FROM->TO'	G11_049	'CIMARRON - DRAPER LAKE 345KV CKT 1'	717	0.122	111.00	'GEN337911 1-ARKANSAS NUCLEAR ONE UNIT #2'
12WP	00NR	2	'FROM->TO'	G11_049	'CIMARRON - DRAPER LAKE 345KV CKT 1'	717	0.122	110.95	'GEN515042 1-SEMINOLE 3G'
12WP	00NR	2	'FROM->TO'	G11_049	'CIMARRON - DRAPER LAKE 345KV CKT 1'	717	0.122	110.70	'GEN335831 1-RIVERBEND UNIT#1'
12WP	00NR	2	'FROM->TO'	G11_049	'CIMARRON - DRAPER LAKE 345KV CKT 1'	717	0.122	109.97	'GEN501801 1-DOLET HILLS UNIT1'
12WP	00NR	2	'FROM->TO'	G11_049	'CIMARRON - DRAPER LAKE 345KV CKT 1'	717	0.122	109.97	'GEN515041 1-SEMINOLE 2G'
12WP	00NR	2	'FROM->TO'	G11_049	'CIMARRON - DRAPER LAKE 345KV CKT 1'	717	0.122	109.77	'GEN337910 1-ARKANSAS NUCLEAR ONE UNIT #1'
12WP	00NR	2	'FROM->TO'	G11_049	'CIMARRON - DRAPER LAKE 345KV CKT 1'	717	0.122	109.35	'GEN520947 1-HUGO1'
12WP	00NR	2	'FROM->TO'	G11_049	'CIMARRON - DRAPER LAKE 345KV CKT 1'	717	0.122	108.70	'GEN337652 1-WHITE BLUFF UNIT #1'
12WP	00NR	2	'FROM->TO'	G11_049	'CIMARRON - DRAPER LAKE 345KV CKT 1'	717	0.122	108.46	'GEN509403 1-PIRKEY GENERATION'
12WP	00NR	2	'FROM->TO'	G11_049	'CIMARRON - DRAPER LAKE 345KV CKT 1'	717	0.122	108.45	'GEN509416 1-TURK GENERATION'
12WP	00NR	2	'FROM->TO'	G11_049	'CIMARRON - DRAPER LAKE 345KV CKT 1'	717	0.122	108.30	'GEN336252 1-NINEMILE POINT UNIT#5'
12WP	00NR	2	'FROM->TO'	G11_049	'CIMARRON - DRAPER LAKE 345KV CKT 1'	717	0.122	108.28	'GEN515040 1-SEMINOLE 1G'
12WP	00NR	2	'FROM->TO'	G11_049	'CIMARRON - DRAPER LAKE 345KV CKT 1'	717	0.122	108.21	'GEN501813 1-RODEMACHER UNIT 3'
12WP	00NR	2	'FROM->TO'	G11_049	'CIMARRON - DRAPER LAKE 345KV CKT 1'	717	0.122	108.20	'GEN336251 1-NINEMILE POINT UNIT#4'
12WP	00NR	2	'FROM->TO'	G11_049	'CIMARRON - DRAPER LAKE 345KV CKT 1'	717	0.122	108.20	'GEN338146 1-INDEPENDENCE UNIT #2'
12WP	00NR	2	'FROM->TO'	G11_049	'CIMARRON - DRAPER LAKE 345KV CKT 1'	717	0.122	108.09	'GEN337041 1-GERALD ANDRUS'
12WP	00NR	2	'FROM->TO'	G11_049	'CIMARRON - DRAPER LAKE 345KV CKT 1'	717	0.122	108.07	'GEN337653 1-WHITE BLUFF UNIT #2'
12WP	00NR	2	'FROM->TO'	G11_049	'CIMARRON - DRAPER LAKE 345KV CKT 1'	717	0.122	108.07	'GEN338143 1-INDEPENDENCE UNIT #1'
12WP	00NR	2	'FROM->TO'	G11_049	'CIMARRON - DRAPER LAKE 345KV CKT 1'	717	0.122	107.57	'GEN501812 1-RODEMACHER UNIT 2'
12WP	00NR	2	'FROM->TO'	G11_049	'CIMARRON - DRAPER LAKE 345KV CKT 1'	717	0.122	107.51	'GEN509406 1-WELSH #3'
12WP	00NR	2	'FROM->TO'	G11_049	'CIMARRON - DRAPER LAKE 345KV CKT 1'	717	0.122	107.51	'GEN509405 1-WELSH #2'
12WP	00NR	2	'FROM->TO'	G11_049	'CIMARRON - DRAPER LAKE 345KV CKT 1'	717	0.122	107.51	'GEN509404 1-WELSH #1'
12WP	00NR	2	'FROM->TO'	G11_049	'CIMARRON - DRAPER LAKE 345KV CKT 1'	717	0.122	107.43	'GEN335206 1-NELSON UNIT 6'
12WP	00NR	2	'FROM->TO'	G11_049	'CIMARRON - DRAPER LAKE 345KV CKT 1'	717	0.122	107.22	'GEN336831 1-BAXTER WILSON SES'
12WP	00NR	2	'FROM->TO'	G11_049	'CIMARRON - DRAPER LAKE 345KV CKT 1'	717	0.122	107.18	'GEN334440 1-SABINE UNIT 4'
12WP	00NR	2	'FROM->TO'	G11_049	'CIMARRON - DRAPER LAKE 345KV CKT 1'	717	0.122	107.15	'GEN515226 1-MUSKOGEE 6G'
12WP	00NR	2	'FROM->TO'	G11_049	'CIMARRON - DRAPER LAKE 345KV CKT 1'	717	0.122	106.99	'GEN338388 1-1PLUMPT 23.000'
12WP	00NR	2	'FROM->TO'	G11_049	'CIMARRON - DRAPER LAKE 345KV CKT 1'	717	0.122	106.75	'GEN515223 1-MUSKOGEE 4G'
12WP	00NR	2	'FROM->TO'	G11_049	'CIMARRON - DRAPER LAKE 345KV CKT 1'	717	0.122	106.75	'GEN515225 1-MUSKOGEE 5G'
12WP	00NR	2	'FROM->TO'	G11_049	'CIMARRON - DRAPER LAKE 345KV CKT 1'	717	0.122	106.71	'GEN335204 1-NELSON UNIT 4'
12WP	00NR	2	'FROM->TO'	G11_049	'CIMARRON - DRAPER LAKE 345KV CKT 1'	717	0.122	106.66	'GEN336801 1-BAXTER WILSON UNIT #1'
12WP	00NR	2	'FROM->TO'	G11_049	'CIMARRON - DRAPER LAKE 345KV CKT 1'	717	0.122	106.63	'GEN334433 1-SABINE UNIT 3'
12WP	00NR	2	'FROM->TO'	G11_049	'CIMARRON - DRAPER LAKE 345KV CKT 1'	717	0.122	106.63	'GEN334441 1-SABINE UNIT 5'
12WP	00NR	2	'FROM->TO'	G11_049	'CIMARRON - DRAPER LAKE 345KV CKT 1'	717	0.122	105.44	'GEN336170 1-GULF OXY U4'
12WP	00NR	2	'FROM->TO'	G11_049	'CIMARRON - DRAPER LAKE 345KV CKT 1'	717	0.122	105.25	'GEN334070 1-LEWIS CREEK 1'
12WP	00NR	2	'FROM->TO'	G11_049	'CIMARRON - DRAPER LAKE 345KV CKT 1'	717	0.122	105.21	'GEN334071 1-LEWIS CREEK 2'
12WP	00NR	2	'FROM->TO'	G11_049	'CIMARRON - DRAPER LAKE 345KV CKT 1'	717	0.122	105.11	'GEN300006 1-NEW MADRID UNIT 1'
12WP	00NR	2	'FROM->TO'	G11_049	'CIMARRON - DRAPER LAKE 345KV CKT 1'	717	0.122	105.09	'GEN300007 1-NEW MADRID UNIT 2'
12WP	00NR	2	'FROM->TO'	G11_049	'CIMARRON - DRAPER LAKE 345KV CKT 1'	717	0.122	105.05	'GEN509394 1-FLINT CREEK'
12WP	00NR	2	'FROM->TO'	G11_049	'CIMARRON - DRAPER LAKE 345KV CKT 1'	717	0.122	104.92	'GEN512688 2-GRDA1 GSU2 22'
12WP	00NR	2	'FROM->TO'	G11_049	'CIMARRON - DRAPER LAKE 345KV CKT 1'	717	0.122	104.88	'GEN334432 1-SABINE UNIT 2'
12WP	00NR	2	'FROM->TO'	G11_049	'CIMARRON - DRAPER LAKE 345KV CKT 1'	717	0.122	104.88	'GEN334431 1-SABINE UNIT 1'
12WP	00NR	2	'FROM->TO'	G11_049	'CIMARRON - DRAPER LAKE 345KV CKT 1'	717	0.122	104.86	'GEN334030 1-FRONTIER UNIT 1'
12WP	00NR	2	'FROM->TO'	G11_049	'CIMARRON - DRAPER LAKE 345KV CKT 1'	717	0.122	104.86	'GEN334031 1-FRONTIER UNIT 2'
12WP	00NR	2	'FROM->TO'	G11_049	'CIMARRON - DRAPER LAKE 345KV CKT 1'	717	0.122	104.84	'GEN509393 S1-ARSENAL HILL GENS #4 (STALL)'
12WP	00NR	2	'FROM->TO'	G11_049	'CIMARRON - DRAPER LAKE 345KV CKT 1'	717	0.122	104.80	'GEN335612 1-WILLOW GLENN UNIT#2'
12WP	00NR	2	'FROM->TO'	G11_049	'CIMARRON - DRAPER LAKE 345KV CKT 1'	717	0.122	104.70	'GEN512689 1-GRDA1 GSU1 22'
12WP	00NR	2	'FROM->TO'	G11_049	'CIMARRON - DRAPER LAKE 345KV CKT 1'	717	0.122	104.70	'GEN509391 G1-ARSENAL HILL GENS #2 (STALL)'
12WP	00NR	2	'FROM->TO'	G11_049	'CIMARRON - DRAPER LAKE 345KV CKT 1'	717	0.122	104.70	'GEN509392 G2-ARSENAL HILL GENS #3 (STALL)'
12WP	00NR	2	'FROM->TO'	G11_049	'CIMARRON - DRAPER LAKE 345KV CKT 1'	717	0.122	104.58	'GEN503909 1-FULTONU1 1 16.000'
12WP	00NR	2	'FROM->TO'	G11_049	'CIMARRON - DRAPER LAKE 345KV CKT 1'	717	0.122	104.56	'GEN337428 1-PERYVILLE UNIT #1'
12WP	00NR	2	'FROM->TO'	G11_049	'CIMARRON - DRAPER LAKE 345KV CKT 1'	717	0.122	104.56	'GEN337430 1-PERYVILLE UNIT #3'
12WP	00NR	2	'FROM->TO'	G11_049	'CIMARRON - DRAPER LAKE 345KV CKT 1'	717	0.122	104.52	'GEN337429 1-PERYVILLE UNIT #2'
12WP	00NR	2	'FROM->TO'	G11_049	'CIMARRON - DRAPER LAKE 345KV CKT 1'	717	0.122	104.52	'GEN337432 1-PERYVILLE UNIT #5'
12WP	00NR	2	'FROM->TO'	G11_049	'CIMARRON - DRAPER LAKE 345KV CKT 1'	717	0.122	104.49	'GEN511840 1-NORTHEASTERN STATION #3'
12WP	00NR	2	'FROM->TO'	G11_049	'CIMARRON - DRAPER LAKE 345KV CKT 1'	717	0.122	104.48	'GEN511839 1-NORTHEASTERN STATION #2'
12WP	00NR	2	'FROM->TO'	G11_049	'CIMARRON - DRAPER LAKE 345KV CKT 1'	717	0.122	104.47	'GEN506752 1-LEBROCK GAS 1'
12WP	00NR	2	'FROM->TO'	G11_049	'CIMARRON - DRAPER LAKE 345KV CKT 1'	717	0.122	104.46	'GEN511841 1-NORTHEASTERN STATION #4'
12WP	00NR	2	'FROM->TO'	G11_049	'CIMARRON - DRAPER LAKE 345KV CKT 1'	717	0.122	104.44	'GEN335075 1-DYNEGY#1'
12WP	00NR	2	'FROM->TO'	G11_049	'CIMARRON - DRAPER LAKE 345KV CKT 1'	717	0.122	104.43	'GEN318007 1-5MOROW161 161.00'
12WP	00NR	2	'FROM->TO'	G11_049	'CIMARRON - DRAPER LAKE 345KV CKT 1'	717	0.122	104.43	'GEN336167 1-GULF OXY U1'
12WP	00NR	2	'FROM->TO'	G11_049	'CIMARRON - DRAPER LAKE 345KV CKT 1'	717	0.122	104.43	'GEN336168 1-GULF OXY U2'
12WP	00NR	2	'FROM->TO'	G11_049	'CIMARRON - DRAPER LAKE 345KV CKT 1'	717	0.122	104.43	'GEN336169 1-GULF OXY U3'
12WP	00NR	2	'FROM->TO'	G11_049	'CIMARRON - DRAPER LAKE 345KV CKT 1'	717	0.122	104.41	'GEN335203 1-NELSON UNIT 3'
12WP	00NR	2	'FROM->TO'	G11_049	'CIMARRON - DRAPER LAKE 345KV CKT 1'	717	0.122	104.36	'GEN334392 1-EXXON MOBIL IPP 1'
12WP	00NR	2	'FROM->TO'	G11_049	'CIMARRON - DRAPER LAKE 345KV CKT 1'	717	0.122	104.30	'GEN337006 1-DUKE MCADAMS G1'

SEASON	GROUP	SCENARIO	DIRECTION	SOURCE	MONITORED ELEMENT	RATE B (MVA)	TDF	(%MVA) LOADING	CONTINGENCY
12WP	00NR	2	'FROM->TO'	G11_049	'CIMARRON - DRAPER LAKE 345KV CKT 1'	717	0.122	104.30	'GEN337007 1-DUKE MCADAMS G2'
12WP	00NR	2	'FROM->TO'	G11_049	'CIMARRON - DRAPER LAKE 345KV CKT 1'	717	0.122	104.28	'GEN505432 1-SIKESTON'
12WP	00NR	2	'FROM->TO'	G11_049	'CIMARRON - DRAPER LAKE 345KV CKT 1'	717	0.122	104.28	'GEN337008 1-DUKE MCADAMS S1'
12WP	00NR	2	'FROM->TO'	G11_049	'CIMARRON - DRAPER LAKE 345KV CKT 1'	717	0.122	104.22	'GEN338500 1-MCCLELLAN UNIT #1'
12WP	00NR	2	'FROM->TO'	G11_049	'CIMARRON - DRAPER LAKE 345KV CKT 1'	717	0.122	104.15	'GEN515266 1-AES 1G'
12WP	00NR	2	'FROM->TO'	G11_049	'CIMARRON - DRAPER LAKE 345KV CKT 1'	717	0.122	104.15	'GEN515267 1-AES 2G'
12WP	00NR	2	'FROM->TO'	G11_049	'CIMARRON - DRAPER LAKE 345KV CKT 1'	717	0.122	104.11	'GEN337954 1-LYNCH UNIT #3'
12WP	00NR	2	'FROM->TO'	G11_049	'CIMARRON - DRAPER LAKE 345KV CKT 1'	717	0.122	104.11	'GEN511938 1-OEC STEAM # 1'
12WP	00NR	2	'FROM->TO'	G11_049	'CIMARRON - DRAPER LAKE 345KV CKT 1'	717	0.122	104.09	'GEN335611 1-WILLOW GLENN UNIT#1'
12WP	00NR	2	'FROM->TO'	G11_049	'CIMARRON - DRAPER LAKE 345KV CKT 1'	717	0.122	104.06	'GEN335201 1-NELSON UNIT 1'
12WP	00NR	2	'FROM->TO'	G11_049	'CIMARRON - DRAPER LAKE 345KV CKT 1'	717	0.122	104.05	'GEN335202 1-NELSON UNIT 2'
12WP	00NR	2	'FROM->TO'	G11_049	'CIMARRON - DRAPER LAKE 345KV CKT 1'	717	0.122	104.02	'GEN336944 1-REX BROWN'
12WP	00NR	2	'FROM->TO'	G11_049	'CIMARRON - DRAPER LAKE 345KV CKT 1'	717	0.122	104.01	'GEN334456 1-CONOCO UNIT#1'
12WP	00NR	2	'FROM->TO'	G11_049	'CIMARRON - DRAPER LAKE 345KV CKT 1'	717	0.122	103.99	'GEN506749 1-EASTMAN GENERATION A'
12WP	00NR	2	'FROM->TO'	G11_049	'CIMARRON - DRAPER LAKE 345KV CKT 1'	717	0.122	103.93	'GEN338510 1-1S1KNWRI'
12WP	00NR	2	'FROM->TO'	G11_049	'CIMARRON - DRAPER LAKE 345KV CKT 1'	717	0.122	103.93	'GEN338511 1-1C7KNWRI'
12WP	00NR	2	'FROM->TO'	G11_049	'CIMARRON - DRAPER LAKE 345KV CKT 1'	717	0.122	103.92	'GEN335137 C4-PPG'
12WP	00NR	2	'FROM->TO'	G11_049	'CIMARRON - DRAPER LAKE 345KV CKT 1'	717	0.122	103.92	'GEN338513 1-BAILEY UNIT #1'
12WP	00NR	2	'FROM->TO'	G11_049	'CIMARRON - DRAPER LAKE 345KV CKT 1'	717	0.122	103.87	'GEN300003 1-THOMAS HILL UNIT 3'
12WP	00NR	2	'FROM->TO'	G11_049	'CIMARRON - DRAPER LAKE 345KV CKT 1'	717	0.122	103.84	'GEN500915 3-WESTERN KRAFT'
12WP	00NR	2	'FROM->TO'	G11_049	'CIMARRON - DRAPER LAKE 345KV CKT 1'	717	0.122	103.84	'GEN300016 1-1G1GPDEL 18.000'
12WP	00NR	2	'FROM->TO'	G11_049	'CIMARRON - DRAPER LAKE 345KV CKT 1'	717	0.122	103.84	'GEN300017 1-1G2GPDEL 18.000'
12WP	00NR	2	'FROM->TO'	G11_049	'CIMARRON - DRAPER LAKE 345KV CKT 1'	717	0.122	103.82	'GEN501910 1-ACADIA UNIT ST1'
12WP	00NR	2	'FROM->TO'	G11_049	'CIMARRON - DRAPER LAKE 345KV CKT 1'	717	0.122	103.81	'GEN334467 1-DUPONT UNIT#1'
12WP	00NR	2	'FROM->TO'	G11_049	'CIMARRON - DRAPER LAKE 345KV CKT 1'	717	0.122	103.81	'GEN334335 1-TOLEDO BEND'
12WP	00NR	2	'FROM->TO'	G11_049	'CIMARRON - DRAPER LAKE 345KV CKT 1'	717	0.122	103.80	'GEN337124 5-LS POWER BATESVILLE'
12WP	00NR	2	'FROM->TO'	G11_049	'CIMARRON - DRAPER LAKE 345KV CKT 1'	717	0.122	103.80	'GEN503900 1-FITZHUGH CT1'
12WP	00NR	2	'FROM->TO'	G11_049	'CIMARRON - DRAPER LAKE 345KV CKT 1'	717	0.122	103.80	'GEN335546 3-DOW COGEN'
12WP	00NR	2	'FROM->TO'	G11_049	'CIMARRON - DRAPER LAKE 345KV CKT 1'	717	0.122	103.78	'GEN318008 3-5MOSEL161 161.00'
12WP	00NR	2	'FROM->TO'	G11_049	'CIMARRON - DRAPER LAKE 345KV CKT 1'	717	0.122	103.77	'GEN549893 2-SOUTHWEST 2'
12WP	00NR	2	'FROM->TO'	G11_049	'CIMARRON - DRAPER LAKE 345KV CKT 1'	717	0.122	103.76	'GEN336176 1-UNION CARBIDE COGEN GT1'
12WP	00NR	2	'FROM->TO'	G11_049	'CIMARRON - DRAPER LAKE 345KV CKT 1'	717	0.122	103.76	'GEN336177 1-UNION CARBIDE COGEN GT2'
12WP	00NR	2	'FROM->TO'	G11_049	'CIMARRON - DRAPER LAKE 345KV CKT 1'	717	0.122	103.73	'A059'
12WP	00NR	2	'FROM->TO'	G11_049	'CIMARRON - DRAPER LAKE 345KV CKT 1'	717	0.122	103.73	'EUREKA SPRIN'
12WP	00NR	2	'FROM->TO'	G11_049	'CIMARRON - DRAPER LAKE 345KV CKT 1'	717	0.122	103.69	'GEN335644 1-EXXON UNIT5'
12WP	00NR	2	'FROM->TO'	G11_049	'CIMARRON - DRAPER LAKE 345KV CKT 1'	717	0.122	103.21	'BASE CASE'
12WP	00NR	2	'FROM->TO'	G11_049	'CIMARRON - DRAPER LAKE 345KV CKT 1'	717	0.122	103.21	'NO5_GEN-NORTH OMAHA 5'
12WP	00NR	2	'FROM->TO'	G11_049	'CIMARRON - DRAPER LAKE 345KV CKT 1'	717	0.122	102.81	'DRAPER LAKE - DRPCAPS4 138.00 138KV CKT 1'
12WP	00NR	2	'FROM->TO'	G11_049	'CIMARRON - DRAPER LAKE 345KV CKT 1'	717	0.122	102.81	'GEN542957 1-IATAN UNIT #1'
12WP	00NR	2	'FROM->TO'	G11_049	'CIMARRON - DRAPER LAKE 345KV CKT 1'	717	0.122	102.80	'GEN542956 2-LACYGNE UNIT #2'
12WP	00NR	2	'FROM->TO'	G11_049	'CIMARRON - DRAPER LAKE 345KV CKT 1'	717	0.122	102.79	'GEN532663 1-LAWRENCE ENERGY CENTER UNIT 5'
12WP	00NR	2	'FROM->TO'	G11_049	'CIMARRON - DRAPER LAKE 345KV CKT 1'	717	0.122	102.77	'GEN542955 1-LACYGNE UNIT #1'
12WP	00NR	2	'FROM->TO'	G11_049	'CIMARRON - DRAPER LAKE 345KV CKT 1'	717	0.122	102.73	'GEN542962 2-IATAN UNIT #2'
12WP	00NR	2	'FROM->TO'	G11_049	'CIMARRON - DRAPER LAKE 345KV CKT 1'	717	0.122	102.50	'GEN527903 1-HOBBS PLANT #3 (ST)'
12WP	00NR	2	'FROM->TO'	G11_049	'CIMARRON - DRAPER LAKE 345KV CKT 1'	717	0.122	102.43	'GEN523461 1-BLACKHAWK GEN #1'
12WP	00NR	2	'FROM->TO'	G11_049	'CIMARRON - DRAPER LAKE 345KV CKT 1'	717	0.122	102.43	'GEN523462 1-BLACKHAWK GEN #2'
12WP	00NR	2	'FROM->TO'	G11_049	'CIMARRON - DRAPER LAKE 345KV CKT 1'	717	0.122	102.40	'GEN560386 1-G10-029-1 0.6900'
12WP	00NR	2	'FROM->TO'	G11_049	'CIMARRON - DRAPER LAKE 345KV CKT 1'	717	0.122	102.40	'GEN560387 1-G10-029-2 0.6900'
12WP	00NR	2	'FROM->TO'	G11_049	'CIMARRON - DRAPER LAKE 345KV CKT 1'	717	0.122	102.40	'GEN560388 1-G10-029-3 0.6900'
12WP	00NR	2	'FROM->TO'	G11_049	'CIMARRON - DRAPER LAKE 345KV CKT 1'	717	0.122	102.30	'GEN532653 1-JEFFREY ENERGY CENTER UNIT 3'
12WP	00NR	2	'FROM->TO'	G11_049	'CIMARRON - DRAPER LAKE 345KV CKT 1'	717	0.122	102.28	'GEN532651 1-JEFFREY ENERGY CENTER UNIT 1'
12WP	00NR	2	'FROM->TO'	G11_049	'CIMARRON - DRAPER LAKE 345KV CKT 1'	717	0.122	102.26	'GEN532652 1-JEFFREY ENERGY CENTER UNIT 2'
12WP	00NR	2	'FROM->TO'	G11_049	'CIMARRON - DRAPER LAKE 345KV CKT 1'	717	0.122	102.24	'GEN527165 1-Mustang Gen #5'
12WP	00NR	2	'FROM->TO'	G11_049	'CIMARRON - DRAPER LAKE 345KV CKT 1'	717	0.122	102.24	'GEN527164 1-MUSTANG GEN #4 22 KV'
12WP	00NR	2	'FROM->TO'	G11_049	'CIMARRON - DRAPER LAKE 345KV CKT 1'	717	0.122	102.22	'GEN527901 1-HOBBS PLANT #1 (CT)'
12WP	00NR	2	'FROM->TO'	G11_049	'CIMARRON - DRAPER LAKE 345KV CKT 1'	717	0.122	102.21	'GEN527902 1-HOBBS PLANT #2 (CT)'
12WP	00NR	2	'FROM->TO'	G11_049	'CIMARRON - DRAPER LAKE 345KV CKT 1'	717	0.122	102.18	'GEN527163 1-MUSTANG GEN #3 22 KV'
12WP	00NR	2	'FROM->TO'	G11_049	'CIMARRON - DRAPER LAKE 345KV CKT 1'	717	0.122	102.16	'GEN527161 1-MUSTANG GEN #1'
12WP	00NR	2	'FROM->TO'	G11_049	'CIMARRON - DRAPER LAKE 345KV CKT 1'	717	0.122	102.15	'GEN527162 1-MUSTANG GEN #2'
12WP	00NR	2	'FROM->TO'	G11_049	'CIMARRON - DRAPER LAKE 345KV CKT 1'	717	0.122	102.08	'GEN560356 1-G10-53 0.6900'
12WP	00NR	2	'FROM->TO'	G11_049	'CIMARRON - DRAPER LAKE 345KV CKT 1'	717	0.122	102.03	'GEN520997 1-MORLND2'
12WP	00NR	2	'FROM->TO'	G11_049	'CIMARRON - DRAPER LAKE 345KV CKT 1'	717	0.122	102.02	'GEN560329 1-G10-45 0.6900'
12WP	00NR	2	'FROM->TO'	G11_049	'CIMARRON - DRAPER LAKE 345KV CKT 1'	717	0.122	101.96	'GEN520998 1-MORLND3'
12WP	00NR	2	'FROM->TO'	G11_049	'CIMARRON - DRAPER LAKE 345KV CKT 1'	717	0.122	101.84	'GEN514805 1-SOONER UNIT 1'
12WP	00NR	2	'FROM->TO'	G11_049	'CIMARRON - DRAPER LAKE 345KV CKT 1'	717	0.122	101.74	'GEN526333 1-JONES GEN #3 21 KV'
12WP	00NR	2	'FROM->TO'	G11_049	'CIMARRON - DRAPER LAKE 345KV CKT 1'	717	0.122	101.74	'GEN526334 1-JONES_4 116.500'
12WP	00NR	2	'FROM->TO'	G11_049	'CIMARRON - DRAPER LAKE 345KV CKT 1'	717	0.122	101.54	'GEN514806 1-SOONER UNIT 2'
12WP	00NR	2	'FROM->TO'	G11_049	'CIMARRON - DRAPER LAKE 345KV CKT 1'	717	0.122	101.31	'GEN531447 1-HOLCOMB GENERATOR'
12WP	00NR	2	'FROM->TO'	G11_049	'CIMARRON - DRAPER LAKE 345KV CKT 1'	717	0.122	100.78	'GEN523971 1-HARRINGTON GEN #1 24 KV'
12WP	00NR	2	'FROM->TO'	G11_049	'CIMARRON - DRAPER LAKE 345KV CKT 1'	717	0.122	100.69	'GEN523972 1-HARRINGTON GEN #2 24 KV'
12WP	00NR	2	'FROM->TO'	G11_049	'CIMARRON - DRAPER LAKE 345KV CKT 1'	717	0.122	100.68	'GEN523973 1-HARRINGTON GEN #3 24 KV'
12WP	00NR	2	'FROM->TO'	G11_049	'CIMARRON - DRAPER LAKE 345KV CKT 1'	717	0.122	100.29	'GEN560225 1-G10-43 18.000'
12WP	00NR	2	'FROM->TO'	G11_049	'CIMARRON - DRAPER LAKE 345KV CKT 1'	717	0.122	100.05	'GEN532751 1-WOLF CREEK GENERATING STATION UNIT 1'
12WP	00NR	2	'FROM->TO'	G11_049	'CIMARRON - DRAPER LAKE 345KV CKT 1'	717	0.122	103.66	'MAGNET COVE - SHERIDAN EHV 500KV CKT 1'
12WP	00NR	2	'FROM->TO'	G11_049	'CIMARRON - DRAPER LAKE 345KV CKT 1'	717	0.122	102.30	'FIXICO TAP - MAUD 138KV CKT 1'
12WP	00NR	2	'FROM->TO'	G11_049	'CIMARRON - DRAPER LAKE 345KV CKT 1'	717	0.122	103.65	'LACYGNE - STILWELL 345KV CKT 1'
12WP	00NR	2	'FROM->TO'	G11_049	'CIMARRON - DRAPER LAKE 345KV CKT 1'	717	0.122	102.55	'FIXICO TAP - WELEETKA 138KV CKT 1'
12WP	00NR	2	'FROM->TO'	G11_049	'CIMARRON - DRAPER LAKE 345KV CKT 1'	717	0.122	104.01	'ELDORADO EHV - SHERIDAN EHV 500KV CKT 1'

SEASON	GROUP	SCENARIO	DIRECTION	SOURCE	MONITORED ELEMENT	RATE B (MVA)	TDF	(%MVA) LOADING	CONTINGENCY
12WP	00NR	2	'FROM->TO'	G11_049	'CIMARRON - DRAPER LAKE 345KV CKT 1'	717	0.122	104.14	'GRACEMONT (BANK 1) 345/138/13.8KV TRANSFORMER CKT 1'
12WP	00NR	2	'FROM->TO'	G11_049	'CIMARRON - DRAPER LAKE 345KV CKT 1'	717	0.122	102.09	'SEMINOLE (SEMINOL2) 345/138/14.4KV TRANSFORMER CKT 1'
12WP	00NR	2	'FROM->TO'	G11_049	'CIMARRON - DRAPER LAKE 345KV CKT 1'	717	0.122	102.08	'SEMINOLE (SEMINOL1) 345/138/14.4KV TRANSFORMER CKT 1'
12WP	00NR	2	'FROM->TO'	G11_049	'CIMARRON - DRAPER LAKE 345KV CKT 1'	717	0.122	105.19	'MORISNT4 138.00 - STILLWATER 138KV CKT 1'
12WP	00NR	2	'FROM->TO'	G11_049	'CIMARRON - DRAPER LAKE 345KV CKT 1'	717	0.122	104.47	'MCELROY - STILLWATER 138KV CKT 1'
12WP	00NR	2	'FROM->TO'	G11_049	'CIMARRON - DRAPER LAKE 345KV CKT 1'	717	0.122	104.23	'KINZE - MCELROY 138KV CKT 1'
12WP	00NR	2	'FROM->TO'	G11_049	'CIMARRON - DRAPER LAKE 345KV CKT 1'	717	0.122	102.70	'HIGHLAND - PINK SW 138KV CKT 1'
12WP	00NR	2	'FROM->TO'	G11_049	'CIMARRON - DRAPER LAKE 345KV CKT 1'	717	0.122	100.51	'BARNES 4 138.00 - DRAPER LAKE 138KV CKT 1'
12WP	00NR	2	'FROM->TO'	G11_049	'CIMARRON - DRAPER LAKE 345KV CKT 1'	717	0.122	103.81	'MORISNT4 138.00 - SOONER 138KV CKT 1'
12WP	00NR	2	'FROM->TO'	G11_049	'CIMARRON - DRAPER LAKE 345KV CKT 1'	717	0.122	103.80	'ARCADIA (ARCADIA3) 345/138/13.8KV TRANSFORMER CKT 1'
12WP	00NR	2	'FROM->TO'	G11_049	'CIMARRON - DRAPER LAKE 345KV CKT 1'	717	0.122	103.74	'WOODRING (WOODRNG2) 345/138/13.8KV TRANSFORMER CKT 1'
12WP	00NR	2	'FROM->TO'	G11_049	'CIMARRON - DRAPER LAKE 345KV CKT 1'	717	0.122	103.86	'ARCADIA (ARCADIA2) 345/138/13.8KV TRANSFORMER CKT 1'
12WP	00NR	2	'FROM->TO'	G11_049	'CIMARRON - DRAPER LAKE 345KV CKT 1'	717	0.122	105.09	'ARCADIA - KAMO MEMORIAL 138KV CKT 1'
12WP	00NR	2	'FROM->TO'	G11_049	'CIMARRON - DRAPER LAKE 345KV CKT 1'	717	0.122	104.06	'ARCADIA - OMPA-EDMOND GARBER(LAKE) 138KV CKT 1'
12WP	00NR	2	'FROM->TO'	G11_049	'CIMARRON - DRAPER LAKE 345KV CKT 1'	717	0.122	104.00	'CHITWOOD - OMPA-EDMOND GARBER(LAKE) 138KV CKT 1'
12WP	00NR	2	'FROM->TO'	G11_049	'CIMARRON - DRAPER LAKE 345KV CKT 1'	717	0.122	103.97	'CHITWOOD - JONES TAP 138KV CKT 1'
12WP	00NR	2	'FROM->TO'	G11_049	'CIMARRON - DRAPER LAKE 345KV CKT 1'	717	0.122	104.73	'HORSESHOE LAKE - KAMO MEMORIAL 138KV CKT 1'
12WP	00NR	2	'FROM->TO'	G11_049	'CIMARRON - DRAPER LAKE 345KV CKT 1'	717	0.122	101.94	'FRANKLIN - PINK SW 138KV CKT 1'
12WP	00NR	2	'FROM->TO'	G11_049	'CIMARRON - DRAPER LAKE 345KV CKT 1'	717	0.122	101.66	'FRANKLIN - FRANKLIN SW 138KV CKT 1'
12WP	00NR	2	'FROM->TO'	G11_049	'CIMARRON - DRAPER LAKE 345KV CKT 1'	717	0.122	101.74	'BEAVER CO 345.00 - WOODWARD DISTRICT EHV 345KV CKT 1'
12WP	00NR	2	'FROM->TO'	G11_049	'CIMARRON - DRAPER LAKE 345KV CKT 1'	717	0.121	102.57	'Hitchland Interchange - WOODWARD DISTRICT EHV 345KV CKT 2'
13WP	00NR	2	'FROM->TO'	G11_049	'CIMARRON - DRAPER LAKE 345KV CKT 1'	717	0.121	113.01	'CIMARRON - SARA 138KV CKT 1'
13WP	00NR	2	'FROM->TO'	G11_049	'CIMARRON - DRAPER LAKE 345KV CKT 1'	717	0.121	111.75	'MCCLAIN - SARA 138KV CKT 1'
17WP	00NR	2	'FROM->TO'	G11_049	'CIMARRON - DRAPER LAKE 345KV CKT 1'	717	0.120	101.72	'CIMARRON - SARA 138KV CKT 1'
17WP	00NR	2	'FROM->TO'	G11_049	'CIMARRON - DRAPER LAKE 345KV CKT 1'	717	0.120	100.37	'MCCLAIN - SARA 138KV CKT 1'
13WP	00NR	2	'FROM->TO'	G11_049	'CIMARRON - DRAPER LAKE 345KV CKT 1'	717	0.120	109.95	'CIMARRON - NORTHWEST 345KV CKT 1'
17WP	00NR	2	'FROM->TO'	G11_049	'CIMARRON - DRAPER LAKE 345KV CKT 1'	717	0.120	101.34	'DBL-THIS-WWR'
13WP	00NR	2	'FROM->TO'	G11_049	'CIMARRON - DRAPER LAKE 345KV CKT 1'	717	0.120	104.34	'CLARKSVILLE - MUSKOGEE 345KV CKT 1'
12WP	00NR	2	'FROM->TO'	G11_049	'CIMARRON - DRAPER LAKE 345KV CKT 1'	717	0.120	102.30	'G08-13T 345.00 - SUMNERCO 345.00 345KV CKT 1'
12WP	00NR	2	'FROM->TO'	G11_049	'CIMARRON - DRAPER LAKE 345KV CKT 1'	717	0.120	102.15	'G08-13T 345.00 - WOODRING 345KV CKT 1'
13WP	00NR	2	'FROM->TO'	G11_049	'CIMARRON - DRAPER LAKE 345KV CKT 1'	717	0.119	110.40	'LAWTON EASTSIDE - OKLAUNION 345KV CKT 1'
13WP	00NR	2	'FROM->TO'	G11_049	'CIMARRON - DRAPER LAKE 345KV CKT 1'	717	0.119	109.22	'G05-15T 345.00 - OKLAUNION 345KV CKT 1'
13WP	00NR	2	'FROM->TO'	G11_049	'CIMARRON - DRAPER LAKE 345KV CKT 1'	717	0.119	109.04	'G05-15T 345.00 - TUCO INTERCHANGE 345KV CKT 1'
13WP	00NR	2	'FROM->TO'	G11_049	'CIMARRON - DRAPER LAKE 345KV CKT 1'	717	0.119	109.10	'SOONER - WOODRING 345KV CKT 1'
13WP	00NR	2	'FROM->TO'	G11_049	'CIMARRON - DRAPER LAKE 345KV CKT 1'	717	0.119	112.16	'DBL-WICH-THI'
12WP	00NR	2	'FROM->TO'	G11_049	'CIMARRON - DRAPER LAKE 345KV CKT 1'	717	0.119	103.95	'MUSKOGEE - PITTSBURG 345KV CKT 1'
13WP	00NR	2	'FROM->TO'	G11_049	'CIMARRON - DRAPER LAKE 345KV CKT 1'	717	0.118	109.90	'JOHNSON COUNTY - SUNNYSIDE 345KV CKT 1'
13WP	00NR	2	'FROM->TO'	G11_049	'CIMARRON - DRAPER LAKE 345KV CKT 1'	717	0.118	118.95	'CLEVELAND - SOONER 345KV CKT 1'
13WP	00NR	2	'FROM->TO'	G11_049	'CIMARRON - DRAPER LAKE 345KV CKT 1'	717	0.118	108.43	'JOHNSON COUNTY - PITTSBURG 345KV CKT 1'
13WP	00NR	2	'FROM->TO'	G11_049	'CIMARRON - DRAPER LAKE 345KV CKT 1'	717	0.117	108.80	'SUNSHINE CANYON - WESTMOORE 138KV CKT 1'
13WP	00NR	2	'FROM->TO'	G11_049	'CIMARRON - DRAPER LAKE 345KV CKT 1'	717	0.117	108.18	'FRANKLIN SW - WESTMOORE 138KV CKT 1'
13WP	00NR	2	'FROM->TO'	G11_049	'CIMARRON - DRAPER LAKE 345KV CKT 1'	717	0.117	109.68	'MATTHEWSON 345.00 - WOODRING 345KV CKT 1'
13WP	00NR	2	'FROM->TO'	G11_049	'CIMARRON - DRAPER LAKE 345KV CKT 1'	717	0.117	112.40	'CIMARRON - CZECH HALL 138KV CKT 1'
13WP	00NR	2	'FROM->TO'	G11_049	'CIMARRON - DRAPER LAKE 345KV CKT 1'	717	0.117	111.95	'CZECH HALL - XEROX 138KV CKT 1'
13WP	00NR	2	'FROM->TO'	G11_049	'CIMARRON - DRAPER LAKE 345KV CKT 1'	717	0.117	111.93	'MORGAN - XEROX 138KV CKT 1'
13WP	00NR	2	'FROM->TO'	G11_049	'CIMARRON - DRAPER LAKE 345KV CKT 1'	717	0.117	111.82	'MORGAN - MUSTANG 138KV CKT 1'
13WP	00NR	2	'FROM->TO'	G11_049	'CIMARRON - DRAPER LAKE 345KV CKT 1'	717	0.117	119.98	'ARCADIA - HORSESHOE LAKE 345KV CKT 1'
13WP	00NR	2	'FROM->TO'	G11_049	'CIMARRON - DRAPER LAKE 345KV CKT 1'	717	0.117	119.97	'HORSESHOE LAKE - SEMINOLE 345KV CKT 1'
17WP	00NR	2	'FROM->TO'	G11_049	'CIMARRON - DRAPER LAKE 345KV CKT 1'	717	0.117	100.67	'CIMARRON - NORTHWEST 345KV CKT 1'
13WP	00NR	2	'FROM->TO'	G11_049	'CIMARRON - DRAPER LAKE 345KV CKT 1'	717	0.117	108.72	'THISTLE 7 345.00 - WOODWARD DISTRICT EHV 345KV CKT 1'
13WP	00NR	2	'FROM->TO'	G11_049	'CIMARRON - DRAPER LAKE 345KV CKT 1'	717	0.117	108.72	'THISTLE 7 345.00 - WOODWARD DISTRICT EHV 345KV CKT 2'
17WP	00NR	2	'FROM->TO'	G11_049	'CIMARRON - DRAPER LAKE 345KV CKT 1'	717	0.117	100.90	'LAWTON EASTSIDE - OKLAUNION 345KV CKT 1'
13WP	00NR	2	'FROM->TO'	G11_049	'CIMARRON - DRAPER LAKE 345KV CKT 1'	717	0.116	108.15	'CLARKSVILLE - ONETA 345KV CKT 1'
12WP	00NR	2	'FROM->TO'	G11_049	'CIMARRON - DRAPER LAKE 345KV CKT 1'	717	0.116	101.49	'DRAPER LAKE - SEMINOLE 345KV CKT 3'
13WP	00NR	2	'FROM->TO'	G11_049	'CIMARRON - DRAPER LAKE 345KV CKT 1'	717	0.116	110.50	'ANADARKO - POCASSETT 138KV CKT 1'
13WP	00NR	2	'FROM->TO'	G11_049	'CIMARRON - DRAPER LAKE 345KV CKT 1'	717	0.116	110.33	'POCASSETT - TUTTLE 138KV CKT 1'
13WP	00NR	2	'FROM->TO'	G11_049	'CIMARRON - DRAPER LAKE 345KV CKT 1'	717	0.116	109.89	'SUNSHINE CANYON - TUTTLE 138KV CKT 1'
13WP	00NR	2	'FROM->TO'	G11_049	'CIMARRON - DRAPER LAKE 345KV CKT 1'	717	0.116	114.10	'CLEVELAND - TULSA NORTH 345KV CKT 1'
13WP	00NR	2	'FROM->TO'	G11_049	'CIMARRON - DRAPER LAKE 345KV CKT 1'	717	0.116	108.29	'GRAY CO 345.00 - SPEARVILLE 345KV CKT 1'
13WP	00NR	2	'FROM->TO'	G11_049	'CIMARRON - DRAPER LAKE 345KV CKT 1'	717	0.116	111.04	'CANEYRV7 345.00 - NEOSHO 345KV CKT 1'
13WP	00NR	2	'FROM->TO'	G11_049	'CIMARRON - DRAPER LAKE 345KV CKT 1'	717	0.116	110.89	'CANEYRV7 345.00 - LATHAMS7 345.00 345KV CKT 1'
13WP	00NR	2	'FROM->TO'	G11_049	'CIMARRON - DRAPER LAKE 345KV CKT 1'	717	0.116	110.35	'LATHAMS7 345.00 - ROSE HILL 345KV CKT 1'
13WP	00NR	2	'FROM->TO'	G11_049	'CIMARRON - DRAPER LAKE 345KV CKT 1'	717	0.116	108.10	'DBL-FINY-HOL'
13WP	00NR	2	'FROM->TO'	G11_049	'CIMARRON - DRAPER LAKE 345KV CKT 1'	717	0.116	108.06	'FINNEY SWITCHING STATION - STEVENSCO 345.00 345KV CKT 1'
13WP	00NR	2	'FROM->TO'	G11_049	'CIMARRON - DRAPER LAKE 345KV CKT 1'	717	0.116	108.81	'OGE3TERM18'
13WP	00NR	2	'FROM->TO'	G11_049	'CIMARRON - DRAPER LAKE 345KV CKT 1'	717	0.116	108.64	'BLANCHARD - CORNVILLE 138KV CKT 1'
13WP	00NR	2	'FROM->TO'	G11_049	'CIMARRON - DRAPER LAKE 345KV CKT 1'	717	0.116	108.44	'BLANCHARD - MAUD 138KV CKT 1'
13WP	00NR	2	'FROM->TO'	G11_049	'CIMARRON - DRAPER LAKE 345KV CKT 1'	717	0.116	108.03	'BEAVER CO 345.00 - GRAY CO 345.00 345KV CKT 1'
13WP	00NR	2	'FROM->TO'	G11_049	'CIMARRON - DRAPER LAKE 345KV CKT 1'	717	0.116	108.71	'36 & MERIDIAN - PENNSYLVANIA 138KV CKT 1'
13WP	00NR	2	'FROM->TO'	G11_049	'CIMARRON - DRAPER LAKE 345KV CKT 1'	717	0.116	102.40	'OGE3TERM21'
13WP	00NR	2	'FROM->TO'	G11_049	'CIMARRON - DRAPER LAKE 345KV CKT 1'	717	0.116	113.23	'CIMARRON (CIMARON1) 345/138/13.8KV TRANSFORMER CKT 1'
13WP	00NR	2	'FROM->TO'	G11_049	'CIMARRON - DRAPER LAKE 345KV CKT 1'	717	0.116	102.54	'DRAPER LAKE - MIDWEST TAP 138KV CKT 1'
13WP	00NR	2	'FROM->TO'	G11_049	'CIMARRON - DRAPER LAKE 345KV CKT 1'	717	0.116	113.02	'CIMARRON (CIMARON2) 345/138/13.8KV TRANSFORMER CKT 1'
13WP	00NR	2	'FROM->TO'	G11_049	'CIMARRON - DRAPER LAKE 345KV CKT 1'	717	0.116	109.13	'NORTHEAST STATION - ONETA 345KV CKT 1'
13WP	00NR	2	'FROM->TO'	G11_049	'CIMARRON - DRAPER LAKE 345KV CKT 1'	717	0.116	108.81	'MINGO - RED WILLOW 345KV CKT 1'
13WP	00NR	2	'FROM->TO'	G11_049	'CIMARRON - DRAPER LAKE 345KV CKT 1'	717	0.116	106.70	'DELAWARE - NORTHEAST STATION 345KV CKT 1'
13WP	00NR	2	'FROM->TO'	G11_049	'CIMARRON - DRAPER LAKE 345KV CKT 1'	717	0.116	101.30	'PITTSBURG - VALLIANT 345KV CKT 1'
17WP	00NR	2	'FROM->TO'	G11_049	'CIMARRON - DRAPER LAKE 345KV CKT 1'	717	0.115	102.03	'DBL-WICH-THI'

SEASON	GROUP	SCENARIO	DIRECTION	SOURCE	MONITORED ELEMENT	RATE B (MVA)	TDF	(%MVA) LOADING	CONTINGENCY
13WP	00NR	2	'FROM->TO'	G11_049	'CIMARRON - DRAPER LAKE 345KV CKT 1'	717	0.115	108.73	'MINGO - SETAB 345KV CKT 1'
13WP	00NR	2	'FROM->TO'	G11_049	'CIMARRON - DRAPER LAKE 345KV CKT 1'	717	0.115	108.81	'THISTLE 7 345.00 - WICHITA 345KV CKT 1'
13WP	00NR	2	'FROM->TO'	G11_049	'CIMARRON - DRAPER LAKE 345KV CKT 1'	717	0.115	108.81	'THISTLE 7 345.00 - WICHITA 345KV CKT 2'
13WP	00NR	2	'FROM->TO'	G11_049	'CIMARRON - DRAPER LAKE 345KV CKT 1'	717	0.115	111.09	'NORTHWEST (NORTWST2) 345/138/13.8KV TRANSFORMER CKT 1'
13WP	00NR	2	'FROM->TO'	G11_049	'CIMARRON - DRAPER LAKE 345KV CKT 1'	717	0.115	108.62	'CLASSEN - ROBINSON 138KV CKT 1'
13WP	00NR	2	'FROM->TO'	G11_049	'CIMARRON - DRAPER LAKE 345KV CKT 1'	717	0.115	108.33	'LIGHTNING CREEK - ROBINSON 138KV CKT 1'
13WP	00NR	2	'FROM->TO'	G11_049	'CIMARRON - DRAPER LAKE 345KV CKT 1'	717	0.115	108.17	'LIGHTNING CREEK - TROSPER 138KV CKT 1'
13WP	00NR	2	'FROM->TO'	G11_049	'CIMARRON - DRAPER LAKE 345KV CKT 1'	717	0.115	105.07	'CHAMBER SPRINGS - CLARKSVILLE 345KV CKT 1'
13WP	00NR	2	'FROM->TO'	G11_049	'CIMARRON - DRAPER LAKE 345KV CKT 1'	717	0.115	108.38	'HOLCOMB - SETAB 345KV CKT 1'
13WP	00NR	2	'FROM->TO'	G11_049	'CIMARRON - DRAPER LAKE 345KV CKT 1'	717	0.115	109.01	'CIMARRON - HAYMAKER 138KV CKT 1'
13WP	00NR	2	'FROM->TO'	G11_049	'CIMARRON - DRAPER LAKE 345KV CKT 1'	717	0.115	108.89	'DIVISION AVE - HAYMAKER 138KV CKT 1'
13WP	00NR	2	'FROM->TO'	G11_049	'CIMARRON - DRAPER LAKE 345KV CKT 1'	717	0.115	110.32	'NORTHWEST (NORTWST3) 345/138/13.8KV TRANSFORMER CKT 1'
13WP	00NR	2	'FROM->TO'	G11_049	'CIMARRON - DRAPER LAKE 345KV CKT 1'	717	0.115	105.28	'FRANKLIN SW - MIDWEST TAP 138KV CKT 1'
13WP	00NR	2	'FROM->TO'	G11_049	'CIMARRON - DRAPER LAKE 345KV CKT 1'	717	0.115	109.00	'LACYGNE - NEOSHO 345KV CKT 1'
13WP	00NR	2	'FROM->TO'	G11_049	'CIMARRON - DRAPER LAKE 345KV CKT 1'	717	0.115	108.50	'TULSA NORTH - WEKIWA 345KV CKT 1'
13WP	00NR	2	'FROM->TO'	G11_049	'CIMARRON - DRAPER LAKE 345KV CKT 1'	717	0.115	108.86	'QUAIL CREEK - SKYLINE 138KV CKT 1'
13WP	00NR	2	'FROM->TO'	G11_049	'CIMARRON - DRAPER LAKE 345KV CKT 1'	717	0.115	108.56	'KETCH TAP - NORTHWEST 138KV CKT 1'
13WP	00NR	2	'FROM->TO'	G11_049	'CIMARRON - DRAPER LAKE 345KV CKT 1'	717	0.115	107.92	'SAPULPA ROAD - WEKIWA 345KV CKT 1'
13WP	00NR	2	'FROM->TO'	G11_049	'CIMARRON - DRAPER LAKE 345KV CKT 1'	717	0.115	108.23	'BENTON - WICHITA 345KV CKT 1'
13WP	00NR	2	'FROM->TO'	G11_049	'CIMARRON - DRAPER LAKE 345KV CKT 1'	717	0.115	106.97	'MUSKOGEE - PECAN CREEK 345KV CKT 2'
13WP	00NR	2	'FROM->TO'	G11_049	'CIMARRON - DRAPER LAKE 345KV CKT 1'	717	0.115	108.57	'OGE3TERM11'
13WP	00NR	2	'FROM->TO'	G11_049	'CIMARRON - DRAPER LAKE 345KV CKT 1'	717	0.115	108.56	'OGE3TERM20'
13WP	00NR	2	'FROM->TO'	G11_049	'CIMARRON - DRAPER LAKE 345KV CKT 1'	717	0.115	106.35	'OAKCREEK - WILD MARY 138KV CKT 1'
13WP	00NR	2	'FROM->TO'	G11_049	'CIMARRON - DRAPER LAKE 345KV CKT 1'	717	0.115	106.09	'AIRDEPT4 138.00 - WILD MARY 138KV CKT 1'
13WP	00NR	2	'FROM->TO'	G11_049	'CIMARRON - DRAPER LAKE 345KV CKT 1'	717	0.115	106.09	'AIRDEPT4 138.00 - GM 138KV CKT 1'
13WP	00NR	2	'FROM->TO'	G11_049	'CIMARRON - DRAPER LAKE 345KV CKT 1'	717	0.115	105.81	'DRAPER LAKE - GM 138KV CKT 1'
13WP	00NR	2	'FROM->TO'	G11_049	'CIMARRON - DRAPER LAKE 345KV CKT 1'	717	0.115	105.78	'FT SMITH - MUSKOGEE 345KV CKT 1'
13WP	00NR	2	'FROM->TO'	G11_049	'CIMARRON - DRAPER LAKE 345KV CKT 1'	717	0.115	109.44	'AXTELL - POST ROCK 345KV CKT 1'
13WP	00NR	2	'FROM->TO'	G11_049	'CIMARRON - DRAPER LAKE 345KV CKT 1'	717	0.115	106.59	'MAUD - SEMINOLE 138KV CKT 1'
13WP	00NR	2	'FROM->TO'	G11_049	'CIMARRON - DRAPER LAKE 345KV CKT 1'	717	0.115	109.48	'HORSESHOE LAKE - JONES TAP 138KV CKT 1'
13WP	00NR	2	'FROM->TO'	G11_049	'CIMARRON - DRAPER LAKE 345KV CKT 1'	717	0.115	108.97	'DBL-MULG-CIR'
13WP	00NR	2	'FROM->TO'	G11_049	'CIMARRON - DRAPER LAKE 345KV CKT 1'	717	0.115	108.94	'DBL-SPRVL-MU'
13WP	00NR	2	'FROM->TO'	G11_049	'CIMARRON - DRAPER LAKE 345KV CKT 1'	717	0.115	108.16	'MARSHALL - WOODRING 138KV CKT 1'
13WP	00NR	2	'FROM->TO'	G11_049	'CIMARRON - DRAPER LAKE 345KV CKT 1'	717	0.115	108.15	'COTTONWOOD CREEK - MARSHALL 138KV CKT 1'
13WP	00NR	2	'FROM->TO'	G11_049	'CIMARRON - DRAPER LAKE 345KV CKT 1'	717	0.115	106.81	'FOREST HILL - MAUD 138KV CKT 1'
13WP	00NR	2	'FROM->TO'	G11_049	'CIMARRON - DRAPER LAKE 345KV CKT 1'	717	0.115	109.30	'G11-17T 345.00 - POST ROCK 345KV CKT 1'
13WP	00NR	2	'FROM->TO'	G11_049	'CIMARRON - DRAPER LAKE 345KV CKT 1'	717	0.115	108.98	'MEMORIAL - SKYLINE 138KV CKT 1'
13WP	00NR	2	'FROM->TO'	G11_049	'CIMARRON - DRAPER LAKE 345KV CKT 1'	717	0.115	106.90	'WESTMOORE - WILROGR4 138KV CKT 1'
13WP	00NR	2	'FROM->TO'	G11_049	'CIMARRON - DRAPER LAKE 345KV CKT 1'	717	0.115	106.78	'OGE3TERM33'
17WP	00NR	2	'FROM->TO'	G11_049	'CIMARRON - DRAPER LAKE 345KV CKT 1'	717	0.115	100.00	'JOHNSON COUNTY - SUNNYSIDE 345KV CKT 1'
13WP	00NR	2	'FROM->TO'	G11_049	'CIMARRON - DRAPER LAKE 345KV CKT 1'	717	0.115	106.42	'PARK LANE - SEMINOLE 138KV CKT 1'
13WP	00NR	2	'FROM->TO'	G11_049	'CIMARRON - DRAPER LAKE 345KV CKT 1'	717	0.115	104.91	'DRAPER LAKE (DRAPER2) 345/138/13.8KV TRANSFORMER CKT 1'
13WP	00NR	2	'FROM->TO'	G11_049	'CIMARRON - DRAPER LAKE 345KV CKT 1'	717	0.115	104.73	'DRAPER LAKE (DRAPER3) 345/138/13.8KV TRANSFORMER CKT 1'
13WP	00NR	2	'FROM->TO'	G11_049	'CIMARRON - DRAPER LAKE 345KV CKT 1'	717	0.115	104.73	'DRAPER LAKE (DRAPER4) 345/138/13.8KV TRANSFORMER CKT 1'
13WP	00NR	2	'FROM->TO'	G11_049	'CIMARRON - DRAPER LAKE 345KV CKT 1'	717	0.115	108.23	'CIVIT - PAOLI 138KV CKT 1'
13WP	00NR	2	'FROM->TO'	G11_049	'CIMARRON - DRAPER LAKE 345KV CKT 1'	717	0.115	108.17	'CIVIT - STRATFORD 138KV CKT 1'
13WP	00NR	2	'FROM->TO'	G11_049	'CIMARRON - DRAPER LAKE 345KV CKT 1'	717	0.115	108.12	'OIL CENTER - STRATFORD 138KV CKT 1'
13WP	00NR	2	'FROM->TO'	G11_049	'CIMARRON - DRAPER LAKE 345KV CKT 1'	717	0.115	108.10	'DAYTON - MUSTANG 138KV CKT 1'
13WP	00NR	2	'FROM->TO'	G11_049	'CIMARRON - DRAPER LAKE 345KV CKT 1'	717	0.115	108.10	'DAYTON - HOBBY LOBBY 138KV CKT 1'
13WP	00NR	2	'FROM->TO'	G11_049	'CIMARRON - DRAPER LAKE 345KV CKT 1'	717	0.115	108.05	'36 & MERIDIAN - HOBBY LOBBY 138KV CKT 1'
13WP	00NR	2	'FROM->TO'	G11_049	'CIMARRON - DRAPER LAKE 345KV CKT 1'	717	0.115	108.05	'LATTA JCT - OIL CENTER 138KV CKT 1'
13WP	00NR	2	'FROM->TO'	G11_049	'CIMARRON - DRAPER LAKE 345KV CKT 1'	717	0.115	107.91	'LASALLE - LATTA JCT 138KV CKT 1'
13WP	00NR	2	'FROM->TO'	G11_049	'CIMARRON - DRAPER LAKE 345KV CKT 1'	717	0.115	108.98	'BLACKBERRY - NEOSHO 345KV CKT 1'
13WP	00NR	2	'FROM->TO'	G11_049	'CIMARRON - DRAPER LAKE 345KV CKT 1'	717	0.115	108.89	'HUGO - SUNNYSIDE 345KV CKT 1'
13WP	00NR	2	'FROM->TO'	G11_049	'CIMARRON - DRAPER LAKE 345KV CKT 1'	717	0.115	108.87	'CORN TAP - PAOLI 138KV CKT 1'
13WP	00NR	2	'FROM->TO'	G11_049	'CIMARRON - DRAPER LAKE 345KV CKT 1'	717	0.115	106.93	'ARBUCKLE - VANOSS 138KV CKT 1'
13WP	00NR	2	'FROM->TO'	G11_049	'CIMARRON - DRAPER LAKE 345KV CKT 1'	717	0.115	108.65	'DIVISION AVE - LAKESIDE 138KV CKT 1'
13WP	00NR	2	'FROM->TO'	G11_049	'CIMARRON - DRAPER LAKE 345KV CKT 1'	717	0.115	108.53	'HEFNER - LAKESIDE 138KV CKT 1'
13WP	00NR	2	'FROM->TO'	G11_049	'CIMARRON - DRAPER LAKE 345KV CKT 1'	717	0.115	108.03	'CLINTON AIR FORCE BASE TAP - ELK CITY 138KV CKT 1'
13WP	00NR	2	'FROM->TO'	G11_049	'CIMARRON - DRAPER LAKE 345KV CKT 1'	717	0.115	108.02	'CLINTON AIR FORCE BASE TAP - HOBART JUNCTION 138KV CKT 1'
13WP	00NR	2	'FROM->TO'	G11_049	'CIMARRON - DRAPER LAKE 345KV CKT 1'	717	0.115	108.46	'SWISSVALE - WEST GARDNER 345KV CKT 1'
13WP	00NR	2	'FROM->TO'	G11_049	'CIMARRON - DRAPER LAKE 345KV CKT 1'	717	0.115	107.91	'DALE - HORSESHOE LAKE 138KV CKT 1'
17WP	00NR	2	'FROM->TO'	G11_049	'CIMARRON - DRAPER LAKE 345KV CKT 1'	717	0.114	108.45	'CLEVELAND - SOONER 345KV CKT 1'
13WP	00NR	2	'FROM->TO'	G11_049	'CIMARRON - DRAPER LAKE 345KV CKT 1'	717	0.114	108.23	'ELK CITY 230KV - SWEETWATER 230KV CKT 1'
13WP	00NR	2	'FROM->TO'	G11_049	'CIMARRON - DRAPER LAKE 345KV CKT 1'	717	0.114	108.23	'ELK CITY 230KV (ELKCTY-6) 230/138/13.8KV TRANSFORMER CKT 1'
13WP	00NR	2	'FROM->TO'	G11_049	'CIMARRON - DRAPER LAKE 345KV CKT 1'	717	0.114	108.29	'KETCH - KETCH TAP 138KV CKT 1'
13WP	00NR	2	'FROM->TO'	G11_049	'CIMARRON - DRAPER LAKE 345KV CKT 1'	717	0.114	107.98	'ANADARKO - BLANCHARD 69KV CKT 1'
13WP	00NR	2	'FROM->TO'	G11_049	'CIMARRON - DRAPER LAKE 345KV CKT 1'	717	0.114	111.18	'ANDERSONCO 345.00 - LACYGNE 345KV CKT 1'
13WP	00NR	2	'FROM->TO'	G11_049	'CIMARRON - DRAPER LAKE 345KV CKT 1'	717	0.114	111.06	'ANDERSONCO 345.00 - WOLF CREEK 345KV CKT 1'
13WP	00NR	2	'FROM->TO'	G11_049	'CIMARRON - DRAPER LAKE 345KV CKT 1'	717	0.114	108.57	'EMPORIA ENERGY CENTER - WICHITA 345KV CKT 1'
13WP	00NR	2	'FROM->TO'	G11_049	'CIMARRON - DRAPER LAKE 345KV CKT 1'	717	0.114	108.48	'OVERTON-TRF'
13WP	00NR	2	'FROM->TO'	G11_049	'CIMARRON - DRAPER LAKE 345KV CKT 1'	717	0.114	108.57	'7OVERTON 345.00 - SIBLEY 345KV CKT 1'
13WP	00NR	2	'FROM->TO'	G11_049	'CIMARRON - DRAPER LAKE 345KV CKT 1'	717	0.114	110.11	'REDBUD - RIVERSIDE STATION 345KV CKT 1'
13WP	00NR	2	'FROM->TO'	G11_049	'CIMARRON - DRAPER LAKE 345KV CKT 1'	717	0.114	106.92	'DISCVRY - FOSTER 138KV CKT 1'
13WP	00NR	2	'FROM->TO'	G11_049	'CIMARRON - DRAPER LAKE 345KV CKT 1'	717	0.114	106.75	'DISCVRY - OAKCREEK 138KV CKT 1'
13WP	00NR	2	'FROM->TO'	G11_049	'CIMARRON - DRAPER LAKE 345KV CKT 1'	717	0.114	108.00	'HEALDTON - LOCO 138KV CKT 1'
13WP	00NR	2	'FROM->TO'	G11_049	'CIMARRON - DRAPER LAKE 345KV CKT 1'	717	0.114	107.92	'HEALDTON - RINGLING 138KV CKT 1'
13WP	00NR	2	'FROM->TO'	G11_049	'CIMARRON - DRAPER LAKE 345KV CKT 1'	717	0.114	108.27	'COMANCHE - LOCO 138KV CKT 1'

SEASON	GROUP	SCENARIO	DIRECTION	SOURCE	MONITORED ELEMENT	RATE B (MVA)	TDF	(%MVA) LOADING	CONTINGENCY
13WP	00NR	2	'FROM->TO'	G11_049	'CIMARRON - DRAPER LAKE 345KV CKT 1'	717	0.114	109.17	'WRTOD400'
13WP	00NR	2	'FROM->TO'	G11_049	'CIMARRON - DRAPER LAKE 345KV CKT 1'	717	0.114	108.16	'ROSE HILL - SUMNERCO 345.00 345KV CKT 1'
13WP	00NR	2	'FROM->TO'	G11_049	'CIMARRON - DRAPER LAKE 345KV CKT 1'	717	0.114	108.03	'CLEO CORNER - MEN TAP 138KV CKT 1'
13WP	00NR	2	'FROM->TO'	G11_049	'CIMARRON - DRAPER LAKE 345KV CKT 1'	717	0.114	108.02	'IMO TAP - MEN TAP 138KV CKT 1'
13WP	00NR	2	'FROM->TO'	G11_049	'CIMARRON - DRAPER LAKE 345KV CKT 1'	717	0.114	106.96	'SEMINOLE - VANOSS 138KV CKT 1'
13WP	00NR	2	'FROM->TO'	G11_049	'CIMARRON - DRAPER LAKE 345KV CKT 1'	717	0.114	109.08	'HOYT - JEFFREY ENERGY CENTER 345KV CKT 1'
13WP	00NR	2	'FROM->TO'	G11_049	'CIMARRON - DRAPER LAKE 345KV CKT 1'	717	0.114	108.69	'HOYT - STRANGER CREEK 345KV CKT 1'
13WP	00NR	2	'FROM->TO'	G11_049	'CIMARRON - DRAPER LAKE 345KV CKT 1'	717	0.114	108.21	'EMPORIA ENERGY CENTER - SWISSVALE 345KV CKT 1'
13WP	00NR	2	'FROM->TO'	G11_049	'CIMARRON - DRAPER LAKE 345KV CKT 1'	717	0.114	107.98	'EL RENO SW - MUSTANG 69KV CKT 1'
13WP	00NR	2	'FROM->TO'	G11_049	'CIMARRON - DRAPER LAKE 345KV CKT 1'	717	0.114	108.06	'RENO COUNTY - SUMMIT 345KV CKT 1'
13WP	00NR	2	'FROM->TO'	G11_049	'CIMARRON - DRAPER LAKE 345KV CKT 1'	717	0.114	107.98	'PENNSYLVANIA - SANTA FE 138KV CKT 1'
13WP	00NR	2	'FROM->TO'	G11_049	'CIMARRON - DRAPER LAKE 345KV CKT 1'	717	0.114	108.52	'LONEOAK - NORTHWEST 138KV CKT 1'
13WP	00NR	2	'FROM->TO'	G11_049	'CIMARRON - DRAPER LAKE 345KV CKT 1'	717	0.114	108.20	'LONEOAK - QUAIL CREEK 138KV CKT 1'
13WP	00NR	2	'FROM->TO'	G11_049	'CIMARRON - DRAPER LAKE 345KV CKT 1'	717	0.114	107.94	'5LOCSTGV - MAID 161KV CKT 1'
13WP	00NR	2	'FROM->TO'	G11_049	'CIMARRON - DRAPER LAKE 345KV CKT 1'	717	0.114	107.93	'5CDRCRST 161.00 - 5LOCSTGV 161KV CKT 1'
13WP	00NR	2	'FROM->TO'	G11_049	'CIMARRON - DRAPER LAKE 345KV CKT 1'	717	0.114	108.03	'GLASS MOUNTAIN - MOORELAND 138KV CKT 1'
13WP	00NR	2	'FROM->TO'	G11_049	'CIMARRON - DRAPER LAKE 345KV CKT 1'	717	0.114	108.03	'CLEO CORNER - GLASS MOUNTAIN 138KV CKT 1'
13WP	00NR	2	'FROM->TO'	G11_049	'CIMARRON - DRAPER LAKE 345KV CKT 1'	717	0.114	108.43	'HUGO - VALLIANT 345KV CKT 1'
13WP	00NR	2	'FROM->TO'	G11_049	'CIMARRON - DRAPER LAKE 345KV CKT 1'	717	0.114	108.36	'DIVISION AVE - MUSTANG 138KV CKT 1'
13WP	00NR	2	'FROM->TO'	G11_049	'CIMARRON - DRAPER LAKE 345KV CKT 1'	717	0.114	108.24	'AXTELL - PAULINE 345KV CKT 1'
13WP	00NR	2	'FROM->TO'	G11_049	'CIMARRON - DRAPER LAKE 345KV CKT 1'	717	0.114	108.50	'GRAND ISLAND - SWEETWATER 345KV CKT 1'
13WP	00NR	2	'FROM->TO'	G11_049	'CIMARRON - DRAPER LAKE 345KV CKT 1'	717	0.114	108.09	'MOORE - PAULINE 345KV CKT 1'
13WP	00NR	2	'FROM->TO'	G11_049	'CIMARRON - DRAPER LAKE 345KV CKT 1'	717	0.114	108.16	'HAMMETT TAP - HORSESHOE LAKE 138KV CKT 1'
13WP	00NR	2	'FROM->TO'	G11_049	'CIMARRON - DRAPER LAKE 345KV CKT 1'	717	0.114	106.53	'KEO EHV - WEST MEMPHIS 500 500KV CKT 1'
13WP	00NR	2	'FROM->TO'	G11_049	'CIMARRON - DRAPER LAKE 345KV CKT 1'	717	0.114	108.05	'OUMED 4 - STONEWALL 138KV CKT 1'
13WP	00NR	2	'FROM->TO'	G11_049	'CIMARRON - DRAPER LAKE 345KV CKT 1'	717	0.114	107.99	'OUMED 4 - PARK PLACE 138KV CKT 1'
13WP	00NR	2	'FROM->TO'	G11_049	'CIMARRON - DRAPER LAKE 345KV CKT 1'	717	0.114	108.75	'OGE3TERM17'
13WP	00NR	2	'FROM->TO'	G11_049	'CIMARRON - DRAPER LAKE 345KV CKT 1'	717	0.114	107.94	'COUNCIL - MUSTANG 138KV CKT 1'
13WP	00NR	2	'FROM->TO'	G11_049	'CIMARRON - DRAPER LAKE 345KV CKT 1'	717	0.114	106.96	'OGE3TERM41'
13WP	00NR	2	'FROM->TO'	G11_049	'CIMARRON - DRAPER LAKE 345KV CKT 1'	717	0.114	106.90	'8BHAM STEEL 500.00 - WEST MEMPHIS 500 500KV CKT 1'
13WP	00NR	2	'FROM->TO'	G11_049	'CIMARRON - DRAPER LAKE 345KV CKT 1'	717	0.114	106.89	'AMRN_OUTS5'
13WP	00NR	2	'FROM->TO'	G11_049	'CIMARRON - DRAPER LAKE 345KV CKT 1'	717	0.114	106.88	'G11_040_TAP 138.00 - POOLEVILLE 138KV CKT 1'
13WP	00NR	2	'FROM->TO'	G11_049	'CIMARRON - DRAPER LAKE 345KV CKT 1'	717	0.114	109.52	'OGE3TERM14'
13WP	00NR	2	'FROM->TO'	G11_049	'CIMARRON - DRAPER LAKE 345KV CKT 1'	717	0.114	108.40	'NORTHWEST - PANTHER 138KV CKT 1'
13WP	00NR	2	'FROM->TO'	G11_049	'CIMARRON - DRAPER LAKE 345KV CKT 1'	717	0.114	108.36	'PANTHER - SILVER LAKE 138KV CKT 1'
13WP	00NR	2	'FROM->TO'	G11_049	'CIMARRON - DRAPER LAKE 345KV CKT 1'	717	0.114	108.26	'CLEVELAND (CLVAUTO1) 345/138/13.8KV TRANSFORMER CKT 1'
13WP	00NR	2	'FROM->TO'	G11_049	'CIMARRON - DRAPER LAKE 345KV CKT 1'	717	0.114	106.39	'DRAPER LAKE - SOONER TAP 138KV CKT 1'
13WP	00NR	2	'FROM->TO'	G11_049	'CIMARRON - DRAPER LAKE 345KV CKT 1'	717	0.114	106.39	'OGE3TERM22'
13WP	00NR	2	'FROM->TO'	G11_049	'CIMARRON - DRAPER LAKE 345KV CKT 1'	717	0.114	108.17	'ANADARKO - GEORGIA 138KV CKT 1'
13WP	00NR	2	'FROM->TO'	G11_049	'CIMARRON - DRAPER LAKE 345KV CKT 1'	717	0.114	108.13	'FLETCHER - GEORGIA 138KV CKT 1'
13WP	00NR	2	'FROM->TO'	G11_049	'CIMARRON - DRAPER LAKE 345KV CKT 1'	717	0.114	106.54	'DELL 500 - INDEPENDENCE 500KV CKT 1'
13WP	00NR	2	'FROM->TO'	G11_049	'CIMARRON - DRAPER LAKE 345KV CKT 1'	717	0.114	106.81	'CANADIAN RIVER - MCALESTER SOUTH 138KV CKT 1'
13WP	00NR	2	'FROM->TO'	G11_049	'CIMARRON - DRAPER LAKE 345KV CKT 1'	717	0.114	106.80	'CANADIAN RIVER () 345/138/13.8KV TRANSFORMER CKT 1'
13WP	00NR	2	'FROM->TO'	G11_049	'CIMARRON - DRAPER LAKE 345KV CKT 1'	717	0.114	107.95	'HEFNER - TULSA 138KV CKT 1'
13WP	00NR	2	'FROM->TO'	G11_049	'CIMARRON - DRAPER LAKE 345KV CKT 1'	717	0.114	108.40	'OGE3TERM13'
13WP	00NR	2	'FROM->TO'	G11_049	'CIMARRON - DRAPER LAKE 345KV CKT 1'	717	0.114	108.00	'EMPIRE - FLETCHER 138KV CKT 1'
13WP	00NR	2	'FROM->TO'	G11_049	'CIMARRON - DRAPER LAKE 345KV CKT 1'	717	0.114	107.93	'COMANCHE - EMPIRE 138KV CKT 1'
13WP	00NR	2	'FROM->TO'	G11_049	'CIMARRON - DRAPER LAKE 345KV CKT 1'	717	0.114	108.21	'AI43'
13WP	00NR	2	'FROM->TO'	G11_049	'CIMARRON - DRAPER LAKE 345KV CKT 1'	717	0.114	108.21	'7LUTESVIL 345.00 - 7ST FRANC 345.00 345KV CKT 1'
13WP	00NR	2	'FROM->TO'	G11_049	'CIMARRON - DRAPER LAKE 345KV CKT 1'	717	0.114	108.12	'CLINTON - MONTROSE 161KV CKT 1'
13WP	00NR	2	'FROM->TO'	G11_049	'CIMARRON - DRAPER LAKE 345KV CKT 1'	717	0.114	108.04	'EL RENO - ROMAN NOSE 138KV CKT 1'
13WP	00NR	2	'FROM->TO'	G11_049	'CIMARRON - DRAPER LAKE 345KV CKT 1'	717	0.114	108.03	'ROMAN NOSE - SOUTHARD 138KV CKT 1'
13WP	00NR	2	'FROM->TO'	G11_049	'CIMARRON - DRAPER LAKE 345KV CKT 1'	717	0.114	108.02	'DEWEY - SOUTHARD 138KV CKT 1'
13WP	00NR	2	'FROM->TO'	G11_049	'CIMARRON - DRAPER LAKE 345KV CKT 1'	717	0.114	106.91	'ARKANSAS NUCLEAR ONE - PLEASANT HILL 500KV CKT 1'
13WP	00NR	2	'FROM->TO'	G11_049	'CIMARRON - DRAPER LAKE 345KV CKT 1'	717	0.114	108.31	'OGE3TERM19'
13WP	00NR	2	'FROM->TO'	G11_049	'CIMARRON - DRAPER LAKE 345KV CKT 1'	717	0.114	107.97	'NEOSHO (NEOSHO2X) 345/161/13.8KV TRANSFORMER CKT 1'
13WP	00NR	2	'FROM->TO'	G11_049	'CIMARRON - DRAPER LAKE 345KV CKT 1'	717	0.114	106.74	'BAXTER WILSON SES - PERRYVILLE 500KV CKT 1'
13WP	00NR	2	'FROM->TO'	G11_049	'CIMARRON - DRAPER LAKE 345KV CKT 1'	717	0.114	107.97	'ATC_B2_8E2'
13WP	00NR	2	'FROM->TO'	G11_049	'CIMARRON - DRAPER LAKE 345KV CKT 1'	717	0.114	107.95	'LAKEOVER - MCADAMS 500KV CKT 1'
13WP	00NR	2	'FROM->TO'	G11_049	'CIMARRON - DRAPER LAKE 345KV CKT 1'	717	0.114	106.93	'OSAGE - WEBB CITY TAP 138KV CKT 1'
13WP	00NR	2	'FROM->TO'	G11_049	'CIMARRON - DRAPER LAKE 345KV CKT 1'	717	0.114	106.75	'FAIRFAX TAP - WEBB CITY TAP 138KV CKT 1'
13WP	00NR	2	'FROM->TO'	G11_049	'CIMARRON - DRAPER LAKE 345KV CKT 1'	717	0.114	109.42	'OGE3TERM12'
13WP	00NR	2	'FROM->TO'	G11_049	'CIMARRON - DRAPER LAKE 345KV CKT 1'	717	0.114	108.15	'WEBRE - WELLS 500KV CKT 1'
13WP	00NR	2	'FROM->TO'	G11_049	'CIMARRON - DRAPER LAKE 345KV CKT 1'	717	0.114	106.98	'ROSE HILL - WOLF CREEK 345KV CKT 1'
13WP	00NR	2	'FROM->TO'	G11_049	'CIMARRON - DRAPER LAKE 345KV CKT 1'	717	0.114	108.06	'OGE3TERM28'
13WP	00NR	2	'FROM->TO'	G11_049	'CIMARRON - DRAPER LAKE 345KV CKT 1'	717	0.114	108.05	'ATCHSNT3 345.00 - BOONEVILLE 345KV CKT 1'
13WP	00NR	2	'FROM->TO'	G11_049	'CIMARRON - DRAPER LAKE 345KV CKT 1'	717	0.114	107.98	'ATCHSNT3 345.00 - COOPER 345KV CKT 1'
13WP	00NR	2	'FROM->TO'	G11_049	'CIMARRON - DRAPER LAKE 345KV CKT 1'	717	0.114	108.19	'HAMMETT TAP - HAMMETT2 138KV CKT 1'
13WP	00NR	2	'FROM->TO'	G11_049	'CIMARRON - DRAPER LAKE 345KV CKT 1'	717	0.114	108.07	'HAMMETT2 - MEEKER 138KV CKT 1'
13WP	00NR	2	'FROM->TO'	G11_049	'CIMARRON - DRAPER LAKE 345KV CKT 1'	717	0.114	108.50	'FAIRFAX TAP - SHIDLER 138KV CKT 1'
13WP	00NR	2	'FROM->TO'	G11_049	'CIMARRON - DRAPER LAKE 345KV CKT 1'	717	0.114	108.46	'SHIDLER - WEST PAWHUSKA 138KV CKT 1'
13WP	00NR	2	'FROM->TO'	G11_049	'CIMARRON - DRAPER LAKE 345KV CKT 1'	717	0.114	108.46	'PAWHUSKA TAP - WEST PAWHUSKA 138KV CKT 1'
13WP	00NR	2	'FROM->TO'	G11_049	'CIMARRON - DRAPER LAKE 345KV CKT 1'	717	0.114	108.41	'DOMES - PAWHUSKA TAP 138KV CKT 1'
13WP	00NR	2	'FROM->TO'	G11_049	'CIMARRON - DRAPER LAKE 345KV CKT 1'	717	0.114	108.39	'DOMES - MOUND ROAD 138KV CKT 1'
13WP	00NR	2	'FROM->TO'	G11_049	'CIMARRON - DRAPER LAKE 345KV CKT 1'	717	0.114	108.27	'7JASPER 345.00 - MORGAN 345KV CKT 1'
13WP	00NR	2	'FROM->TO'	G11_049	'CIMARRON - DRAPER LAKE 345KV CKT 1'	717	0.114	107.98	'SHERIDAN EHV - WHITE BLUFF 500KV CKT 1'
13WP	00NR	2	'FROM->TO'	G11_049	'CIMARRON - DRAPER LAKE 345KV CKT 1'	717	0.114	108.39	'8DANIEL 500.00 - MCKNIGHT 500KV CKT 1'
13WP	00NR	2	'FROM->TO'	G11_049	'CIMARRON - DRAPER LAKE 345KV CKT 1'	717	0.114	108.26	'DOLET HILLS - SOUTHWEST SHREVEPORT 345KV CKT 1'

SEASON	GROUP	SCENARIO	DIRECTION	SOURCE	MONITORED ELEMENT	RATE B (MVA)	TDF	(%MVA) LOADING	CONTINGENCY
13WP	00NR	2	'FROM->TO'	G11_049	'CIMARRON - DRAPER LAKE 345KV CKT 1'	717	0.114	106.95	'CROCKETT - GRIMES 345KV CKT 1'
13WP	00NR	2	'FROM->TO'	G11_049	'CIMARRON - DRAPER LAKE 345KV CKT 1'	717	0.114	106.90	'BAXTER WILSON SES - RAY BRASWELL SES 500KV CKT 1'
13WP	00NR	2	'FROM->TO'	G11_049	'CIMARRON - DRAPER LAKE 345KV CKT 1'	717	0.114	106.88	'NELSON - RICHARD 500KV CKT 1'
13WP	00NR	2	'FROM->TO'	G11_049	'CIMARRON - DRAPER LAKE 345KV CKT 1'	717	0.114	106.61	'DOLET HILLS 345/230KV TRANSFORMER CKT 1'
13WP	00NR	2	'FROM->TO'	G11_049	'CIMARRON - DRAPER LAKE 345KV CKT 1'	717	0.114	105.25	'SPP-AEPW-01'
13WP	00NR	2	'FROM->TO'	G11_049	'CIMARRON - DRAPER LAKE 345KV CKT 1'	717	0.114	108.22	'OGE3TERM3'
13WP	00NR	2	'FROM->TO'	G11_049	'CIMARRON - DRAPER LAKE 345KV CKT 1'	717	0.114	106.83	'LEBROCK - TENASKA RUSK COUNTY 345KV CKT 1'
13WP	00NR	2	'FROM->TO'	G11_049	'CIMARRON - DRAPER LAKE 345KV CKT 1'	717	0.114	106.83	'CROCKETT - TENASKA RUSK COUNTY 345KV CKT 1'
13WP	00NR	2	'FROM->TO'	G11_049	'CIMARRON - DRAPER LAKE 345KV CKT 1'	717	0.114	106.64	'SPP-AEPW-04'
13WP	00NR	2	'FROM->TO'	G11_049	'CIMARRON - DRAPER LAKE 345KV CKT 1'	717	0.114	106.25	'LYDIA - WELSH 345KV CKT 1'
13WP	00NR	2	'FROM->TO'	G11_049	'CIMARRON - DRAPER LAKE 345KV CKT 1'	717	0.114	105.67	'LYDIA - VALLIANT 345KV CKT 1'
13WP	00NR	2	'FROM->TO'	G11_049	'CIMARRON - DRAPER LAKE 345KV CKT 1'	717	0.114	116.03	'GEN336821 1-GRAND GULF UNIT'
13WP	00NR	2	'FROM->TO'	G11_049	'CIMARRON - DRAPER LAKE 345KV CKT 1'	717	0.114	115.71	'GEN336153 1-WATERFORD UNIT#3'
13WP	00NR	2	'FROM->TO'	G11_049	'CIMARRON - DRAPER LAKE 345KV CKT 1'	717	0.114	114.57	'GEN337911 1-ARKANSAS NUCLEAR ONE UNIT #2'
13WP	00NR	2	'FROM->TO'	G11_049	'CIMARRON - DRAPER LAKE 345KV CKT 1'	717	0.114	114.50	'GEN335831 1-RIVERBEND UNIT#1'
13WP	00NR	2	'FROM->TO'	G11_049	'CIMARRON - DRAPER LAKE 345KV CKT 1'	717	0.114	113.64	'GEN501801 1-DOLET HILLS UNIT1'
13WP	00NR	2	'FROM->TO'	G11_049	'CIMARRON - DRAPER LAKE 345KV CKT 1'	717	0.114	113.40	'GEN337910 1-ARKANSAS NUCLEAR ONE UNIT #1'
13WP	00NR	2	'FROM->TO'	G11_049	'CIMARRON - DRAPER LAKE 345KV CKT 1'	717	0.114	113.14	'GEN520947 1-HUGO1'
13WP	00NR	2	'FROM->TO'	G11_049	'CIMARRON - DRAPER LAKE 345KV CKT 1'	717	0.114	112.60	'GEN337652 1-WHITE BLUFF UNIT #1'
13WP	00NR	2	'FROM->TO'	G11_049	'CIMARRON - DRAPER LAKE 345KV CKT 1'	717	0.114	112.49	'GEN515040 1-SEMINOLE 1G'
13WP	00NR	2	'FROM->TO'	G11_049	'CIMARRON - DRAPER LAKE 345KV CKT 1'	717	0.114	112.40	'GEN509403 1-PIRKEY GENERATION'
13WP	00NR	2	'FROM->TO'	G11_049	'CIMARRON - DRAPER LAKE 345KV CKT 1'	717	0.114	112.40	'GEN509416 1-TURK GENERATION'
13WP	00NR	2	'FROM->TO'	G11_049	'CIMARRON - DRAPER LAKE 345KV CKT 1'	717	0.114	112.30	'GEN337653 1-WHITE BLUFF UNIT #2'
13WP	00NR	2	'FROM->TO'	G11_049	'CIMARRON - DRAPER LAKE 345KV CKT 1'	717	0.114	112.28	'GEN515042 1-SEMINOLE 3G'
13WP	00NR	2	'FROM->TO'	G11_049	'CIMARRON - DRAPER LAKE 345KV CKT 1'	717	0.114	112.20	'GEN336251 1-NINEMILE POINT UNIT#4'
13WP	00NR	2	'FROM->TO'	G11_049	'CIMARRON - DRAPER LAKE 345KV CKT 1'	717	0.114	112.14	'GEN501813 1-RODEMACHER UNIT 3'
13WP	00NR	2	'FROM->TO'	G11_049	'CIMARRON - DRAPER LAKE 345KV CKT 1'	717	0.114	112.04	'GEN338146 1-INDEPENDENCE UNIT #2'
13WP	00NR	2	'FROM->TO'	G11_049	'CIMARRON - DRAPER LAKE 345KV CKT 1'	717	0.114	112.00	'GEN338143 1-INDEPENDENCE UNIT #1'
13WP	00NR	2	'FROM->TO'	G11_049	'CIMARRON - DRAPER LAKE 345KV CKT 1'	717	0.114	111.90	'GEN337041 1-GERALD ANDRUS'
13WP	00NR	2	'FROM->TO'	G11_049	'CIMARRON - DRAPER LAKE 345KV CKT 1'	717	0.114	111.65	'GEN515041 1-SEMINOLE 2G'
13WP	00NR	2	'FROM->TO'	G11_049	'CIMARRON - DRAPER LAKE 345KV CKT 1'	717	0.114	111.61	'GEN509406 1-WELSH #3'
13WP	00NR	2	'FROM->TO'	G11_049	'CIMARRON - DRAPER LAKE 345KV CKT 1'	717	0.114	111.61	'GEN509405 1-WELSH #2'
13WP	00NR	2	'FROM->TO'	G11_049	'CIMARRON - DRAPER LAKE 345KV CKT 1'	717	0.114	111.61	'GEN509404 1-WELSH #1'
13WP	00NR	2	'FROM->TO'	G11_049	'CIMARRON - DRAPER LAKE 345KV CKT 1'	717	0.114	111.60	'GEN501812 1-RODEMACHER UNIT 2'
13WP	00NR	2	'FROM->TO'	G11_049	'CIMARRON - DRAPER LAKE 345KV CKT 1'	717	0.114	111.59	'GEN334440 1-SABINE UNIT 4'
13WP	00NR	2	'FROM->TO'	G11_049	'CIMARRON - DRAPER LAKE 345KV CKT 1'	717	0.114	111.47	'GEN335206 1-NELSON UNIT 6'
13WP	00NR	2	'FROM->TO'	G11_049	'CIMARRON - DRAPER LAKE 345KV CKT 1'	717	0.114	111.34	'GEN515226 1-MUSKOGEE 6G'
13WP	00NR	2	'FROM->TO'	G11_049	'CIMARRON - DRAPER LAKE 345KV CKT 1'	717	0.114	111.25	'GEN336831 1-BAXTER WILSON SES'
13WP	00NR	2	'FROM->TO'	G11_049	'CIMARRON - DRAPER LAKE 345KV CKT 1'	717	0.114	111.12	'GEN334441 1-SABINE UNIT 5'
13WP	00NR	2	'FROM->TO'	G11_049	'CIMARRON - DRAPER LAKE 345KV CKT 1'	717	0.114	110.94	'GEN338388 1-1PLUMPT 23.000'
13WP	00NR	2	'FROM->TO'	G11_049	'CIMARRON - DRAPER LAKE 345KV CKT 1'	717	0.114	110.84	'GEN515223 1-MUSKOGEE 4G'
13WP	00NR	2	'FROM->TO'	G11_049	'CIMARRON - DRAPER LAKE 345KV CKT 1'	717	0.114	110.79	'GEN515225 1-MUSKOGEE 5G'
13WP	00NR	2	'FROM->TO'	G11_049	'CIMARRON - DRAPER LAKE 345KV CKT 1'	717	0.114	109.59	'GEN336170 1-GULF OXY U4'
13WP	00NR	2	'FROM->TO'	G11_049	'CIMARRON - DRAPER LAKE 345KV CKT 1'	717	0.114	109.41	'GEN334070 1-LEWIS CREEK 1'
13WP	00NR	2	'FROM->TO'	G11_049	'CIMARRON - DRAPER LAKE 345KV CKT 1'	717	0.114	109.38	'GEN334071 1-LEWIS CREEK 2'
13WP	00NR	2	'FROM->TO'	G11_049	'CIMARRON - DRAPER LAKE 345KV CKT 1'	717	0.114	109.24	'GEN300006 1-NEW MADRID UNIT 1'
13WP	00NR	2	'FROM->TO'	G11_049	'CIMARRON - DRAPER LAKE 345KV CKT 1'	717	0.114	109.22	'GEN300007 1-NEW MADRID UNIT 2'
13WP	00NR	2	'FROM->TO'	G11_049	'CIMARRON - DRAPER LAKE 345KV CKT 1'	717	0.114	109.11	'GEN514998 1-MCCLAIN UNIT 1'
13WP	00NR	2	'FROM->TO'	G11_049	'CIMARRON - DRAPER LAKE 345KV CKT 1'	717	0.114	109.10	'GEN334432 1-SABINE UNIT 2'
13WP	00NR	2	'FROM->TO'	G11_049	'CIMARRON - DRAPER LAKE 345KV CKT 1'	717	0.114	109.05	'GEN509394 1-FLINT CREEK'
13WP	00NR	2	'FROM->TO'	G11_049	'CIMARRON - DRAPER LAKE 345KV CKT 1'	717	0.114	109.03	'GEN334030 1-FRONTIER UNIT 1'
13WP	00NR	2	'FROM->TO'	G11_049	'CIMARRON - DRAPER LAKE 345KV CKT 1'	717	0.114	109.03	'GEN334031 1-FRONTIER UNIT 2'
13WP	00NR	2	'FROM->TO'	G11_049	'CIMARRON - DRAPER LAKE 345KV CKT 1'	717	0.114	109.02	'GEN509393 S1-ARSENAL HILL GENS #4 (STALL)'
13WP	00NR	2	'FROM->TO'	G11_049	'CIMARRON - DRAPER LAKE 345KV CKT 1'	717	0.114	109.02	'GEN334431 1-SABINE UNIT 1'
13WP	00NR	2	'FROM->TO'	G11_049	'CIMARRON - DRAPER LAKE 345KV CKT 1'	717	0.114	108.98	'GEN335612 1-WILLOW GLENN UNIT#2'
13WP	00NR	2	'FROM->TO'	G11_049	'CIMARRON - DRAPER LAKE 345KV CKT 1'	717	0.114	108.96	'GEN511843 1-RIVERSIDE STATION #2'
13WP	00NR	2	'FROM->TO'	G11_049	'CIMARRON - DRAPER LAKE 345KV CKT 1'	717	0.114	108.89	'GEN509391 G1-ARSENAL HILL GENS #2 (STALL)'
13WP	00NR	2	'FROM->TO'	G11_049	'CIMARRON - DRAPER LAKE 345KV CKT 1'	717	0.114	108.89	'GEN509392 G2-ARSENAL HILL GENS #3 (STALL)'
13WP	00NR	2	'FROM->TO'	G11_049	'CIMARRON - DRAPER LAKE 345KV CKT 1'	717	0.114	108.85	'GEN509408 1-WILKES #2'
13WP	00NR	2	'FROM->TO'	G11_049	'CIMARRON - DRAPER LAKE 345KV CKT 1'	717	0.114	108.83	'GEN512688 2-GRDA1 GSU2 22'
13WP	00NR	2	'FROM->TO'	G11_049	'CIMARRON - DRAPER LAKE 345KV CKT 1'	717	0.114	108.77	'GEN503909 1-FULTONU1 1 16.000'
13WP	00NR	2	'FROM->TO'	G11_049	'CIMARRON - DRAPER LAKE 345KV CKT 1'	717	0.114	108.73	'GEN337428 1-PERYVILLE UNIT #1'
13WP	00NR	2	'FROM->TO'	G11_049	'CIMARRON - DRAPER LAKE 345KV CKT 1'	717	0.114	108.73	'GEN337430 1-PERYVILLE UNIT #3'
13WP	00NR	2	'FROM->TO'	G11_049	'CIMARRON - DRAPER LAKE 345KV CKT 1'	717	0.114	108.71	'GEN512689 1-GRDA1 GSU1 22'
13WP	00NR	2	'FROM->TO'	G11_049	'CIMARRON - DRAPER LAKE 345KV CKT 1'	717	0.114	108.69	'GEN337429 1-PERYVILLE UNIT #2'
13WP	00NR	2	'FROM->TO'	G11_049	'CIMARRON - DRAPER LAKE 345KV CKT 1'	717	0.114	108.69	'GEN337432 1-PERYVILLE UNIT #5'
13WP	00NR	2	'FROM->TO'	G11_049	'CIMARRON - DRAPER LAKE 345KV CKT 1'	717	0.114	108.68	'GEN506752 1-LEBROCK GAS 1'
13WP	00NR	2	'FROM->TO'	G11_049	'CIMARRON - DRAPER LAKE 345KV CKT 1'	717	0.114	108.63	'GEN335075 1-DYNEGY#1'
13WP	00NR	2	'FROM->TO'	G11_049	'CIMARRON - DRAPER LAKE 345KV CKT 1'	717	0.114	108.62	'GEN336167 1-GULF OXY U1'
13WP	00NR	2	'FROM->TO'	G11_049	'CIMARRON - DRAPER LAKE 345KV CKT 1'	717	0.114	108.62	'GEN336168 1-GULF OXY U2'
13WP	00NR	2	'FROM->TO'	G11_049	'CIMARRON - DRAPER LAKE 345KV CKT 1'	717	0.114	108.62	'GEN336169 1-GULF OXY U3'
13WP	00NR	2	'FROM->TO'	G11_049	'CIMARRON - DRAPER LAKE 345KV CKT 1'	717	0.114	108.61	'GEN318007 1-5MOROW161 161.00'
13WP	00NR	2	'FROM->TO'	G11_049	'CIMARRON - DRAPER LAKE 345KV CKT 1'	717	0.114	108.61	'GEN335203 1-NELSON UNIT 3'
13WP	00NR	2	'FROM->TO'	G11_049	'CIMARRON - DRAPER LAKE 345KV CKT 1'	717	0.114	108.58	'GEN337421 1-OUCHITA CTG1'
13WP	00NR	2	'FROM->TO'	G11_049	'CIMARRON - DRAPER LAKE 345KV CKT 1'	717	0.114	108.58	'GEN337423 1-OUCHITA CTG2'
13WP	00NR	2	'FROM->TO'	G11_049	'CIMARRON - DRAPER LAKE 345KV CKT 1'	717	0.114	108.58	'GEN337425 1-OUCHITA CTG3'
13WP	00NR	2	'FROM->TO'	G11_049	'CIMARRON - DRAPER LAKE 345KV CKT 1'	717	0.114	108.56	'GEN511840 1-NORTHEASTERN STATION #3'
13WP	00NR	2	'FROM->TO'	G11_049	'CIMARRON - DRAPER LAKE 345KV CKT 1'	717	0.114	108.55	'GEN334392 1-EXXON MOBIL IPP 1'

SEASON	GROUP	SCENARIO	DIRECTION	SOURCE	MONITORED ELEMENT	RATE B (MVA)	TDF	(%MVA) LOADING	CONTINGENCY
13WP	00NR	2	'FROM->TO'	G11_049	'CIMARRON - DRAPER LAKE 345KV CKT 1'	717	0.114	108.54	'GEN511841 1-NORTHEASTERN STATION #4'
13WP	00NR	2	'FROM->TO'	G11_049	'CIMARRON - DRAPER LAKE 345KV CKT 1'	717	0.114	108.52	'GEN511839 1-NORTHEASTERN STATION #2'
13WP	00NR	2	'FROM->TO'	G11_049	'CIMARRON - DRAPER LAKE 345KV CKT 1'	717	0.114	108.48	'GEN337006 1-DUKE MCADAMS G1'
13WP	00NR	2	'FROM->TO'	G11_049	'CIMARRON - DRAPER LAKE 345KV CKT 1'	717	0.114	108.48	'GEN337007 1-DUKE MCADAMS G2'
13WP	00NR	2	'FROM->TO'	G11_049	'CIMARRON - DRAPER LAKE 345KV CKT 1'	717	0.114	108.46	'GEN337008 1-DUKE MCADAMS S1'
13WP	00NR	2	'FROM->TO'	G11_049	'CIMARRON - DRAPER LAKE 345KV CKT 1'	717	0.114	108.44	'GEN505432 1-SIKESTON'
13WP	00NR	2	'FROM->TO'	G11_049	'CIMARRON - DRAPER LAKE 345KV CKT 1'	717	0.114	108.41	'GEN338500 1-MCCLELLAN UNIT #1'
13WP	00NR	2	'FROM->TO'	G11_049	'CIMARRON - DRAPER LAKE 345KV CKT 1'	717	0.114	108.34	'GEN515266 1-AES 1G'
13WP	00NR	2	'FROM->TO'	G11_049	'CIMARRON - DRAPER LAKE 345KV CKT 1'	717	0.114	108.34	'GEN515267 1-AES 2G'
13WP	00NR	2	'FROM->TO'	G11_049	'CIMARRON - DRAPER LAKE 345KV CKT 1'	717	0.114	108.31	'GEN335611 1-WILLOW GLENN UNIT#1'
13WP	00NR	2	'FROM->TO'	G11_049	'CIMARRON - DRAPER LAKE 345KV CKT 1'	717	0.114	108.30	'GEN562053 1-G11_040_4 0.6900'
13WP	00NR	2	'FROM->TO'	G11_049	'CIMARRON - DRAPER LAKE 345KV CKT 1'	717	0.114	108.29	'GEN337954 1-LYNCH UNIT #3'
13WP	00NR	2	'FROM->TO'	G11_049	'CIMARRON - DRAPER LAKE 345KV CKT 1'	717	0.114	108.29	'GEN511938 1-OEC STEAM # 1'
13WP	00NR	2	'FROM->TO'	G11_049	'CIMARRON - DRAPER LAKE 345KV CKT 1'	717	0.114	108.27	'GEN335201 1-NELSON UNIT 1'
13WP	00NR	2	'FROM->TO'	G11_049	'CIMARRON - DRAPER LAKE 345KV CKT 1'	717	0.114	108.25	'GEN335202 1-NELSON UNIT 2'
13WP	00NR	2	'FROM->TO'	G11_049	'CIMARRON - DRAPER LAKE 345KV CKT 1'	717	0.114	108.23	'GEN336944 1-REX BROWN'
13WP	00NR	2	'FROM->TO'	G11_049	'CIMARRON - DRAPER LAKE 345KV CKT 1'	717	0.114	108.22	'GEN506749 1-EASTMAN GENERATION A'
13WP	00NR	2	'FROM->TO'	G11_049	'CIMARRON - DRAPER LAKE 345KV CKT 1'	717	0.114	108.18	'GEN511842 1-RIVERSIDE STATION #1'
13WP	00NR	2	'FROM->TO'	G11_049	'CIMARRON - DRAPER LAKE 345KV CKT 1'	717	0.114	108.17	'GEN562052 1-G11_040_3 0.6900'
13WP	00NR	2	'FROM->TO'	G11_049	'CIMARRON - DRAPER LAKE 345KV CKT 1'	717	0.114	108.16	'GEN337422 1-OUCHITA STG1'
13WP	00NR	2	'FROM->TO'	G11_049	'CIMARRON - DRAPER LAKE 345KV CKT 1'	717	0.114	108.16	'GEN337424 1-OUCHITA STG2'
13WP	00NR	2	'FROM->TO'	G11_049	'CIMARRON - DRAPER LAKE 345KV CKT 1'	717	0.114	108.16	'GEN337426 1-OUCHITA STG3'
13WP	00NR	2	'FROM->TO'	G11_049	'CIMARRON - DRAPER LAKE 345KV CKT 1'	717	0.114	108.13	'GEN335137 C4-PPG'
13WP	00NR	2	'FROM->TO'	G11_049	'CIMARRON - DRAPER LAKE 345KV CKT 1'	717	0.114	108.13	'GEN338510 1-1S1KNWRI'
13WP	00NR	2	'FROM->TO'	G11_049	'CIMARRON - DRAPER LAKE 345KV CKT 1'	717	0.114	108.13	'GEN338511 1-1C7KNWRI'
13WP	00NR	2	'FROM->TO'	G11_049	'CIMARRON - DRAPER LAKE 345KV CKT 1'	717	0.114	108.11	'GEN338513 1-BAILEY UNIT #1'
13WP	00NR	2	'FROM->TO'	G11_049	'CIMARRON - DRAPER LAKE 345KV CKT 1'	717	0.114	108.11	'GEN300003 1-THOMAS HILL UNIT 3'
13WP	00NR	2	'FROM->TO'	G11_049	'CIMARRON - DRAPER LAKE 345KV CKT 1'	717	0.114	108.06	'GEN500915 3-WESTERN KRAFT'
13WP	00NR	2	'FROM->TO'	G11_049	'CIMARRON - DRAPER LAKE 345KV CKT 1'	717	0.114	108.05	'GEN549893 2-SOUTHWEST 2'
13WP	00NR	2	'FROM->TO'	G11_049	'CIMARRON - DRAPER LAKE 345KV CKT 1'	717	0.114	108.05	'GEN300015 1-1SGPDEL 18.000'
13WP	00NR	2	'FROM->TO'	G11_049	'CIMARRON - DRAPER LAKE 345KV CKT 1'	717	0.114	108.05	'GEN300016 1-1G1GPDEL 18.000'
13WP	00NR	2	'FROM->TO'	G11_049	'CIMARRON - DRAPER LAKE 345KV CKT 1'	717	0.114	108.05	'GEN300017 1-1G2GPDEL 18.000'
13WP	00NR	2	'FROM->TO'	G11_049	'CIMARRON - DRAPER LAKE 345KV CKT 1'	717	0.114	108.04	'GEN503900 1-FITZHUGH CT1'
13WP	00NR	2	'FROM->TO'	G11_049	'CIMARRON - DRAPER LAKE 345KV CKT 1'	717	0.114	108.03	'GEN501910 1-ACADIA UNIT ST1'
13WP	00NR	2	'FROM->TO'	G11_049	'CIMARRON - DRAPER LAKE 345KV CKT 1'	717	0.114	108.03	'GEN334335 1-TOLEDO BEND'
13WP	00NR	2	'FROM->TO'	G11_049	'CIMARRON - DRAPER LAKE 345KV CKT 1'	717	0.114	108.02	'GEN334467 1-DUPONT UNIT#1'
13WP	00NR	2	'FROM->TO'	G11_049	'CIMARRON - DRAPER LAKE 345KV CKT 1'	717	0.114	108.01	'GEN335546 3-DOW COGEN'
13WP	00NR	2	'FROM->TO'	G11_049	'CIMARRON - DRAPER LAKE 345KV CKT 1'	717	0.114	108.01	'GEN337124 5-LS POWER BATESVILLE'
13WP	00NR	2	'FROM->TO'	G11_049	'CIMARRON - DRAPER LAKE 345KV CKT 1'	717	0.114	107.99	'GEN318008 3-5MOSEL161 161.00'
13WP	00NR	2	'FROM->TO'	G11_049	'CIMARRON - DRAPER LAKE 345KV CKT 1'	717	0.114	107.99	'A059'
13WP	00NR	2	'FROM->TO'	G11_049	'CIMARRON - DRAPER LAKE 345KV CKT 1'	717	0.114	107.99	'EUREKA SPRIN'
13WP	00NR	2	'FROM->TO'	G11_049	'CIMARRON - DRAPER LAKE 345KV CKT 1'	717	0.114	107.97	'GEN336176 1-UNION CARBIDE COGEN GT1'
13WP	00NR	2	'FROM->TO'	G11_049	'CIMARRON - DRAPER LAKE 345KV CKT 1'	717	0.114	107.97	'GEN336177 1-UNION CARBIDE COGEN GT2'
13WP	00NR	2	'FROM->TO'	G11_049	'CIMARRON - DRAPER LAKE 345KV CKT 1'	717	0.114	107.95	'GEN509409 1-WILKES #3'
13WP	00NR	2	'FROM->TO'	G11_049	'CIMARRON - DRAPER LAKE 345KV CKT 1'	717	0.114	107.94	'CELE-WELLOP1'
13WP	00NR	2	'FROM->TO'	G11_049	'CIMARRON - DRAPER LAKE 345KV CKT 1'	717	0.114	107.47	'BASE CASE'
13WP	00NR	2	'FROM->TO'	G11_049	'CIMARRON - DRAPER LAKE 345KV CKT 1'	717	0.114	107.06	'DRAPER LAKE - DRPCAPS4 138.00 138KV CKT 1'
13WP	00NR	2	'FROM->TO'	G11_049	'CIMARRON - DRAPER LAKE 345KV CKT 1'	717	0.114	106.98	'LONGWOOD - WILKES 345KV CKT 1'
13WP	00NR	2	'FROM->TO'	G11_049	'CIMARRON - DRAPER LAKE 345KV CKT 1'	717	0.114	106.96	'GEN532663 1-LAWRENCE ENERGY CENTER UNIT 5'
13WP	00NR	2	'FROM->TO'	G11_049	'CIMARRON - DRAPER LAKE 345KV CKT 1'	717	0.114	106.94	'GEN542957 1-IATAN UNIT #1'
13WP	00NR	2	'FROM->TO'	G11_049	'CIMARRON - DRAPER LAKE 345KV CKT 1'	717	0.114	106.93	'GEN542956 2-LACYGNE UNIT #2'
13WP	00NR	2	'FROM->TO'	G11_049	'CIMARRON - DRAPER LAKE 345KV CKT 1'	717	0.114	106.91	'GEN542955 1-LACYGNE UNIT #1'
13WP	00NR	2	'FROM->TO'	G11_049	'CIMARRON - DRAPER LAKE 345KV CKT 1'	717	0.114	106.90	'GEN542962 2-IATAN UNIT #2'
13WP	00NR	2	'FROM->TO'	G11_049	'CIMARRON - DRAPER LAKE 345KV CKT 1'	717	0.114	106.83	'GEN640009 1-COOPER NUCLEAR STATION'
13WP	00NR	2	'FROM->TO'	G11_049	'CIMARRON - DRAPER LAKE 345KV CKT 1'	717	0.114	106.78	'WELSH - WILKES 345KV CKT 1'
13WP	00NR	2	'FROM->TO'	G11_049	'CIMARRON - DRAPER LAKE 345KV CKT 1'	717	0.114	106.75	'GEN562092 1-G11_058_4 0.6900'
13WP	00NR	2	'FROM->TO'	G11_049	'CIMARRON - DRAPER LAKE 345KV CKT 1'	717	0.114	106.72	'GEN562094 1-G11_058_5 0.6900'
13WP	00NR	2	'FROM->TO'	G11_049	'CIMARRON - DRAPER LAKE 345KV CKT 1'	717	0.114	106.66	'GEN562049 1-G11_012_3 0.6900'
13WP	00NR	2	'FROM->TO'	G11_049	'CIMARRON - DRAPER LAKE 345KV CKT 1'	717	0.114	106.66	'GEN523462 1-BLACKHAWK GEN #2'
13WP	00NR	2	'FROM->TO'	G11_049	'CIMARRON - DRAPER LAKE 345KV CKT 1'	717	0.114	106.66	'GEN523461 1-BLACKHAWK GEN #1'
13WP	00NR	2	'FROM->TO'	G11_049	'CIMARRON - DRAPER LAKE 345KV CKT 1'	717	0.114	106.62	'GEN560386 1-G10-029-1 0.6900'
13WP	00NR	2	'FROM->TO'	G11_049	'CIMARRON - DRAPER LAKE 345KV CKT 1'	717	0.114	106.62	'GEN560387 1-G10-029-2 0.6900'
13WP	00NR	2	'FROM->TO'	G11_049	'CIMARRON - DRAPER LAKE 345KV CKT 1'	717	0.114	106.62	'GEN560388 1-G10-029-3 0.6900'
13WP	00NR	2	'FROM->TO'	G11_049	'CIMARRON - DRAPER LAKE 345KV CKT 1'	717	0.114	106.61	'GEN562059 1-G11_042_3 0.6900'
13WP	00NR	2	'FROM->TO'	G11_049	'CIMARRON - DRAPER LAKE 345KV CKT 1'	717	0.114	106.58	'GEN560669 1-G10_057 0.6900'
13WP	00NR	2	'FROM->TO'	G11_049	'CIMARRON - DRAPER LAKE 345KV CKT 1'	717	0.114	106.58	'GEN560714 1-G10_061_3 0.6900'
13WP	00NR	2	'FROM->TO'	G11_049	'CIMARRON - DRAPER LAKE 345KV CKT 1'	717	0.114	106.48	'GEN562065 1-G11_044_3 0.6900'
13WP	00NR	2	'FROM->TO'	G11_049	'CIMARRON - DRAPER LAKE 345KV CKT 1'	717	0.114	106.46	'GEN527165 1-Mustang Gen #5'
13WP	00NR	2	'FROM->TO'	G11_049	'CIMARRON - DRAPER LAKE 345KV CKT 1'	717	0.114	106.46	'GEN527164 1-MUSTANG GEN #4 22 KV'
13WP	00NR	2	'FROM->TO'	G11_049	'CIMARRON - DRAPER LAKE 345KV CKT 1'	717	0.114	106.45	'GEN532653 1-JEFFREY ENERGY CENTER UNIT 3'
13WP	00NR	2	'FROM->TO'	G11_049	'CIMARRON - DRAPER LAKE 345KV CKT 1'	717	0.114	106.45	'GEN527901 1-HOBBS PLANT #1 (CT)'
13WP	00NR	2	'FROM->TO'	G11_049	'CIMARRON - DRAPER LAKE 345KV CKT 1'	717	0.114	106.44	'GEN527902 1-HOBBS PLANT #2 (CT)'
13WP	00NR	2	'FROM->TO'	G11_049	'CIMARRON - DRAPER LAKE 345KV CKT 1'	717	0.114	106.42	'GEN532651 1-JEFFREY ENERGY CENTER UNIT 1'
13WP	00NR	2	'FROM->TO'	G11_049	'CIMARRON - DRAPER LAKE 345KV CKT 1'	717	0.114	106.41	'GEN532652 1-JEFFREY ENERGY CENTER UNIT 2'
13WP	00NR	2	'FROM->TO'	G11_049	'CIMARRON - DRAPER LAKE 345KV CKT 1'	717	0.114	106.40	'GEN527163 1-MUSTANG GEN #3 22 KV'
13WP	00NR	2	'FROM->TO'	G11_049	'CIMARRON - DRAPER LAKE 345KV CKT 1'	717	0.114	106.40	'NORTHWEST TEXARKANA - VALLIANT 345KV CKT 1'
13WP	00NR	2	'FROM->TO'	G11_049	'CIMARRON - DRAPER LAKE 345KV CKT 1'	717	0.114	106.38	'GEN527161 1-MUSTANG GEN #1'
13WP	00NR	2	'FROM->TO'	G11_049	'CIMARRON - DRAPER LAKE 345KV CKT 1'	717	0.114	106.37	'GEN640011 2-GERALD GENTLEMAN STATION UNIT 2'

SEASON	GROUP	SCENARIO	DIRECTION	SOURCE	MONITORED ELEMENT	RATE B (MVA)	TDF	(%MVA) LOADING	CONTINGENCY
13WP	00NR	2	'FROM->TO'	G11_049	'CIMARRON - DRAPER LAKE 345KV CKT 1'	717	0.114	106.37	'GEN527162 1-MUSTANG GEN #2'
13WP	00NR	2	'FROM->TO'	G11_049	'CIMARRON - DRAPER LAKE 345KV CKT 1'	717	0.114	106.36	'GEN562071 1-G11_048_2 18.000'
13WP	00NR	2	'FROM->TO'	G11_049	'CIMARRON - DRAPER LAKE 345KV CKT 1'	717	0.114	106.36	'GEN560600 1-G07-02 15.750'
13WP	00NR	2	'FROM->TO'	G11_049	'CIMARRON - DRAPER LAKE 345KV CKT 1'	717	0.114	106.35	'GEN562035 1-G11_016_3 0.6900'
13WP	00NR	2	'FROM->TO'	G11_049	'CIMARRON - DRAPER LAKE 345KV CKT 1'	717	0.114	106.29	'GEN560356 1-G10-53 0.6900'
13WP	00NR	2	'FROM->TO'	G11_049	'CIMARRON - DRAPER LAKE 345KV CKT 1'	717	0.114	106.26	'GEN520997 1-MORLND2'
13WP	00NR	2	'FROM->TO'	G11_049	'CIMARRON - DRAPER LAKE 345KV CKT 1'	717	0.114	106.25	'GEN562078 1-G11_051_3 0.6900'
13WP	00NR	2	'FROM->TO'	G11_049	'CIMARRON - DRAPER LAKE 345KV CKT 1'	717	0.114	106.22	'GEN560329 1-G10-45 0.6900'
13WP	00NR	2	'FROM->TO'	G11_049	'CIMARRON - DRAPER LAKE 345KV CKT 1'	717	0.114	106.20	'GEN527903 1-HOBBS PLANT #3 (ST)'
13WP	00NR	2	'FROM->TO'	G11_049	'CIMARRON - DRAPER LAKE 345KV CKT 1'	717	0.114	106.18	'GEN520998 1-MORLND3'
13WP	00NR	2	'FROM->TO'	G11_049	'CIMARRON - DRAPER LAKE 345KV CKT 1'	717	0.114	106.18	'GEN640010 1-GERALD GENTLEMAN STATION UNIT 1'
13WP	00NR	2	'FROM->TO'	G11_049	'CIMARRON - DRAPER LAKE 345KV CKT 1'	717	0.114	105.99	'GEN562032 1-G11_017_3 0.6900'
13WP	00NR	2	'FROM->TO'	G11_049	'CIMARRON - DRAPER LAKE 345KV CKT 1'	717	0.114	105.94	'GEN526333 1-JONES GEN #3 21 KV'
13WP	00NR	2	'FROM->TO'	G11_049	'CIMARRON - DRAPER LAKE 345KV CKT 1'	717	0.114	105.94	'GEN526334 1-JONES_4 116.500'
13WP	00NR	2	'FROM->TO'	G11_049	'CIMARRON - DRAPER LAKE 345KV CKT 1'	717	0.114	105.93	'GEN599891 1-OKLAUN'
13WP	00NR	2	'FROM->TO'	G11_049	'CIMARRON - DRAPER LAKE 345KV CKT 1'	717	0.114	105.86	'GEN514805 1-SOONER UNIT 1'
13WP	00NR	2	'FROM->TO'	G11_049	'CIMARRON - DRAPER LAKE 345KV CKT 1'	717	0.114	105.77	'GEN562042 1-G11_014_3 0.6900'
13WP	00NR	2	'FROM->TO'	G11_049	'CIMARRON - DRAPER LAKE 345KV CKT 1'	717	0.114	105.75	'GEN562014 1-G11_023_3 0.6900'
13WP	00NR	2	'FROM->TO'	G11_049	'CIMARRON - DRAPER LAKE 345KV CKT 1'	717	0.114	105.53	'GEN514806 1-SOONER UNIT 2'
13WP	00NR	2	'FROM->TO'	G11_049	'CIMARRON - DRAPER LAKE 345KV CKT 1'	717	0.114	105.49	'GEN531447 1-HOLCOMB GENERATOR'
13WP	00NR	2	'FROM->TO'	G11_049	'CIMARRON - DRAPER LAKE 345KV CKT 1'	717	0.114	105.24	'GEN562074 1-G11_049_3 0.6900'
13WP	00NR	2	'FROM->TO'	G11_049	'CIMARRON - DRAPER LAKE 345KV CKT 1'	717	0.114	105.07	'GEN562020 1-G11_021_3 0.6900'
13WP	00NR	2	'FROM->TO'	G11_049	'CIMARRON - DRAPER LAKE 345KV CKT 1'	717	0.114	105.03	'GEN562017 1-G11_022_3 0.6900'
13WP	00NR	2	'FROM->TO'	G11_049	'CIMARRON - DRAPER LAKE 345KV CKT 1'	717	0.114	104.95	'GEN523971 1-HARRINGTON GEN #1 24 KV'
13WP	00NR	2	'FROM->TO'	G11_049	'CIMARRON - DRAPER LAKE 345KV CKT 1'	717	0.114	104.85	'GEN523972 1-HARRINGTON GEN #2 24 KV'
13WP	00NR	2	'FROM->TO'	G11_049	'CIMARRON - DRAPER LAKE 345KV CKT 1'	717	0.114	104.85	'GEN523973 1-HARRINGTON GEN #3 24 KV'
13WP	00NR	2	'FROM->TO'	G11_049	'CIMARRON - DRAPER LAKE 345KV CKT 1'	717	0.114	104.58	'GEN562023 1-G11_020_3 0.6900'
13WP	00NR	2	'FROM->TO'	G11_049	'CIMARRON - DRAPER LAKE 345KV CKT 1'	717	0.114	104.58	'GEN562026 1-G11_019_3 0.6900'
13WP	00NR	2	'FROM->TO'	G11_049	'CIMARRON - DRAPER LAKE 345KV CKT 1'	717	0.114	104.46	'GEN560225 1-G10-43 18.000'
13WP	00NR	2	'FROM->TO'	G11_049	'CIMARRON - DRAPER LAKE 345KV CKT 1'	717	0.114	103.99	'GEN532751 1-WOLF CREEK GENERATING STATION UNIT 1'
13WP	00NR	2	'FROM->TO'	G11_049	'CIMARRON - DRAPER LAKE 345KV CKT 1'	717	0.114	103.68	'GEN525562 1-TOLK GEN #2 24 KV'
13WP	00NR	2	'FROM->TO'	G11_049	'CIMARRON - DRAPER LAKE 345KV CKT 1'	717	0.114	103.62	'GEN525561 1-TOLK GEN #1 24 KV'
13WP	00NR	2	'FROM->TO'	G11_049	'CIMARRON - DRAPER LAKE 345KV CKT 1'	717	0.114	103.41	'GEN562010 1-G11_024_3 0.6900'
13WP	00NR	2	'FROM->TO'	G11_049	'CIMARRON - DRAPER LAKE 345KV CKT 1'	717	0.114	103.39	'GEN560687 1-G11-007 0.5750'
13WP	00NR	2	'FROM->TO'	G11_049	'CIMARRON - DRAPER LAKE 345KV CKT 1'	717	0.114	101.03	'GEN560323 1-G10-40 0.6900'
13WP	00NR	2	'FROM->TO'	G11_049	'CIMARRON - DRAPER LAKE 345KV CKT 1'	717	0.114	100.88	'GEN562100 1-G11_054_3 0.6900'
13WP	00NR	2	'FROM->TO'	G11_049	'CIMARRON - DRAPER LAKE 345KV CKT 1'	717	0.114	108.48	'7SAREPT 345.00 - ELDORADO EHV 345KV CKT 1'
13WP	00NR	2	'FROM->TO'	G11_049	'CIMARRON - DRAPER LAKE 345KV CKT 1'	717	0.114	108.48	'A222'
13WP	00NR	2	'FROM->TO'	G11_049	'CIMARRON - DRAPER LAKE 345KV CKT 1'	717	0.114	108.48	'ELDORADO EHV 500/345KV TRANSFORMER CKT 1'
13WP	00NR	2	'FROM->TO'	G11_049	'CIMARRON - DRAPER LAKE 345KV CKT 1'	717	0.114	108.46	'7SAREPT 345.00 - LONGWOOD 345KV CKT 1'
13WP	00NR	2	'FROM->TO'	G11_049	'CIMARRON - DRAPER LAKE 345KV CKT 1'	717	0.114	108.18	'GRDA-OPGD-05'
13WP	00NR	2	'FROM->TO'	G11_049	'CIMARRON - DRAPER LAKE 345KV CKT 1'	717	0.114	108.24	'7JASPER 345.00 - BLACKBERRY 345KV CKT 1'
13WP	00NR	2	'FROM->TO'	G11_049	'CIMARRON - DRAPER LAKE 345KV CKT 1'	717	0.114	109.23	'OGE3TERM47'
13WP	00NR	2	'FROM->TO'	G11_049	'CIMARRON - DRAPER LAKE 345KV CKT 1'	717	0.114	108.23	'ELDORADO EHV - SHERIDAN EHV 500KV CKT 1'
13WP	00NR	2	'FROM->TO'	G11_049	'CIMARRON - DRAPER LAKE 345KV CKT 1'	717	0.114	108.05	'CHERRY CREEK - PLEASANT VALLEY 138KV CKT 1'
13WP	00NR	2	'FROM->TO'	G11_049	'CIMARRON - DRAPER LAKE 345KV CKT 1'	717	0.114	107.92	'BOYD - CHERRY CREEK 138KV CKT 1'
13WP	00NR	2	'FROM->TO'	G11_049	'CIMARRON - DRAPER LAKE 345KV CKT 1'	717	0.114	106.71	'FIXICO TAP - MAUD 138KV CKT 1'
13WP	00NR	2	'FROM->TO'	G11_049	'CIMARRON - DRAPER LAKE 345KV CKT 1'	717	0.114	108.35	'GRACEMONT (BANK 1) 345/138/13.8KV TRANSFORMER CKT 1'
13WP	00NR	2	'FROM->TO'	G11_049	'CIMARRON - DRAPER LAKE 345KV CKT 1'	717	0.114	106.98	'FIXICO TAP - WELEETKA 138KV CKT 1'
13WP	00NR	2	'FROM->TO'	G11_049	'CIMARRON - DRAPER LAKE 345KV CKT 1'	717	0.114	106.74	'OGE3TERM36'
13WP	00NR	2	'FROM->TO'	G11_049	'CIMARRON - DRAPER LAKE 345KV CKT 1'	717	0.114	106.76	'DBL-CLRK-G11'
13WP	00NR	2	'FROM->TO'	G11_049	'CIMARRON - DRAPER LAKE 345KV CKT 1'	717	0.114	106.33	'DBL-THIS-CLR'
17WP	00NR	2	'FROM->TO'	G11_049	'CIMARRON - DRAPER LAKE 345KV CKT 1'	717	0.114	100.11	'MATTHEWSON 345.00 - WOODRING 345KV CKT 1'
17WP	00NR	2	'FROM->TO'	G11_049	'CIMARRON - DRAPER LAKE 345KV CKT 1'	717	0.114	109.72	'ARCADIA - HORSESHOE LAKE 345KV CKT 1'
17WP	00NR	2	'FROM->TO'	G11_049	'CIMARRON - DRAPER LAKE 345KV CKT 1'	717	0.114	109.71	'HORSESHOE LAKE - SEMINOLE 345KV CKT 1'
13WP	00NR	2	'FROM->TO'	G11_049	'CIMARRON - DRAPER LAKE 345KV CKT 1'	717	0.114	107.04	'HOLLYWOOD - MIDWEST TAP 138KV CKT 1'
13WP	00NR	2	'FROM->TO'	G11_049	'CIMARRON - DRAPER LAKE 345KV CKT 1'	717	0.114	109.37	'MORISNT4 138.00 - STILLWATER 138KV CKT 1'
13WP	00NR	2	'FROM->TO'	G11_049	'CIMARRON - DRAPER LAKE 345KV CKT 1'	717	0.114	108.68	'MCELROY - STILLWATER 138KV CKT 1'
13WP	00NR	2	'FROM->TO'	G11_049	'CIMARRON - DRAPER LAKE 345KV CKT 1'	717	0.114	108.43	'KINZE - MCELROY 138KV CKT 1'
13WP	00NR	2	'FROM->TO'	G11_049	'CIMARRON - DRAPER LAKE 345KV CKT 1'	717	0.114	107.01	'HIGHLAND - PINK SW 138KV CKT 1'
13WP	00NR	2	'FROM->TO'	G11_049	'CIMARRON - DRAPER LAKE 345KV CKT 1'	717	0.114	108.02	'MORISNT4 138.00 - SOONER 138KV CKT 1'
13WP	00NR	2	'FROM->TO'	G11_049	'CIMARRON - DRAPER LAKE 345KV CKT 1'	717	0.114	107.98	'WOODRING (WOODRNG2) 345/138/13.8KV TRANSFORMER CKT 1'
17WP	00NR	2	'FROM->TO'	G11_049	'CIMARRON - DRAPER LAKE 345KV CKT 1'	717	0.114	101.94	'CIMARRON - CZECH HALL 138KV CKT 1'
17WP	00NR	2	'FROM->TO'	G11_049	'CIMARRON - DRAPER LAKE 345KV CKT 1'	717	0.114	101.50	'CZECH HALL - XEROX 138KV CKT 1'
17WP	00NR	2	'FROM->TO'	G11_049	'CIMARRON - DRAPER LAKE 345KV CKT 1'	717	0.114	101.48	'MORGAN - XEROX 138KV CKT 1'
17WP	00NR	2	'FROM->TO'	G11_049	'CIMARRON - DRAPER LAKE 345KV CKT 1'	717	0.114	101.42	'MORGAN - MUSTANG 138KV CKT 1'
13WP	00NR	2	'FROM->TO'	G11_049	'CIMARRON - DRAPER LAKE 345KV CKT 1'	717	0.114	104.98	'OGE3TERM23'
13WP	00NR	2	'FROM->TO'	G11_049	'CIMARRON - DRAPER LAKE 345KV CKT 1'	717	0.114	104.98	'BARNES 4 138.00 - DRAPER LAKE 138KV CKT 1'
13WP	00NR	2	'FROM->TO'	G11_049	'CIMARRON - DRAPER LAKE 345KV CKT 1'	717	0.114	109.44	'ARCADIA - KAMO MEMORIAL 138KV CKT 1'
13WP	00NR	2	'FROM->TO'	G11_049	'CIMARRON - DRAPER LAKE 345KV CKT 1'	717	0.114	108.38	'ARCADIA - OMPA-EDMOND GARBER(LAKE) 138KV CKT 1'
13WP	00NR	2	'FROM->TO'	G11_049	'CIMARRON - DRAPER LAKE 345KV CKT 1'	717	0.114	108.31	'CHITWOOD - OMPA-EDMOND GARBER(LAKE) 138KV CKT 1'
13WP	00NR	2	'FROM->TO'	G11_049	'CIMARRON - DRAPER LAKE 345KV CKT 1'	717	0.114	108.29	'CHITWOOD - JONES TAP 138KV CKT 1'
13WP	00NR	2	'FROM->TO'	G11_049	'CIMARRON - DRAPER LAKE 345KV CKT 1'	717	0.114	106.51	'SEMINOLE (SEMINOL2) 345/138/14.4KV TRANSFORMER CKT 1'
13WP	00NR	2	'FROM->TO'	G11_049	'CIMARRON - DRAPER LAKE 345KV CKT 1'	717	0.114	106.50	'SEMINOLE (SEMINOL1) 345/138/14.4KV TRANSFORMER CKT 1'
13WP	00NR	2	'FROM->TO'	G11_049	'CIMARRON - DRAPER LAKE 345KV CKT 1'	717	0.114	108.33	'HOLLYWOOD - PLEASANT VALLEY 138KV CKT 1'
17WP	00NR	2	'FROM->TO'	G11_049	'CIMARRON - DRAPER LAKE 345KV CKT 1'	717	0.114	100.22	'ANADARKO - BLANCHARD 138KV CKT 1'
13WP	00NR	2	'FROM->TO'	G11_049	'CIMARRON - DRAPER LAKE 345KV CKT 1'	717	0.113	109.12	'HORSESHOE LAKE - KAMO MEMORIAL 138KV CKT 1'
13WP	00NR	2	'FROM->TO'	G11_049	'CIMARRON - DRAPER LAKE 345KV CKT 1'	717	0.113	106.28	'FRANKLIN - PINK SW 138KV CKT 1'

SEASON	GROUP	SCENARIO	DIRECTION	SOURCE	MONITORED ELEMENT	RATE B (MVA)	TDF	(%MVA) LOADING	CONTINGENCY
13WP	00NR	2	'FROM->TO'	G11_049	'CIMARRON - DRAPER LAKE 345KV CKT 1'	717	0.113	106.01	'FRANKLIN - FRANKLIN SW 138KV CKT 1'
17WP	00NR	2	'FROM->TO'	G11_049	'CIMARRON - DRAPER LAKE 345KV CKT 1'	717	0.113	102.77	'CIMARRON (CIMARON1) 345/138/13.8KV TRANSFORMER CKT 1'
17WP	00NR	2	'FROM->TO'	G11_049	'CIMARRON - DRAPER LAKE 345KV CKT 1'	717	0.113	102.59	'CIMARRON (CIMARON2) 345/138/13.8KV TRANSFORMER CKT 1'
17WP	00NR	2	'FROM->TO'	G11_049	'CIMARRON - DRAPER LAKE 345KV CKT 1'	717	0.113	101.16	'CANEYRV7 345.00 - NEOSHO 345KV CKT 1'
17WP	00NR	2	'FROM->TO'	G11_049	'CIMARRON - DRAPER LAKE 345KV CKT 1'	717	0.113	101.01	'CANEYRV7 345.00 - LATHAMS7 345.00 345KV CKT 1'
17WP	00NR	2	'FROM->TO'	G11_049	'CIMARRON - DRAPER LAKE 345KV CKT 1'	717	0.113	100.52	'LATHAMS7 345.00 - ROSE HILL 345KV CKT 1'
17WP	00NR	2	'FROM->TO'	G11_049	'CIMARRON - DRAPER LAKE 345KV CKT 1'	717	0.113	103.96	'CLEVELAND - TULSA NORTH 345KV CKT 1'
13WP	00NR	2	'FROM->TO'	G11_049	'CIMARRON - DRAPER LAKE 345KV CKT 1'	717	0.113	109.22	'MCCLAIN - PLEASANT VALLEY 138KV CKT 1'
13WP	00NR	2	'FROM->TO'	G11_049	'CIMARRON - DRAPER LAKE 345KV CKT 1'	717	0.113	105.96	'BEAVER CO 345.00 - WOODWARD DISTRICT EHV 345KV CKT 1'
17WP	00NR	2	'FROM->TO'	G11_049	'CIMARRON - DRAPER LAKE 345KV CKT 1'	717	0.113	100.00	'ANADARKO - POCASSETT 138KV CKT 1'
13WP	00NR	2	'FROM->TO'	G11_049	'CIMARRON - DRAPER LAKE 345KV CKT 1'	717	0.113	106.81	'Hitchland Interchange - WOODWARD DISTRICT EHV 345KV CKT 2'
12WP	00NR	2	'FROM->TO'	G11_049	'CIMARRON - DRAPER LAKE 345KV CKT 1'	717	0.112	102.46	'BORDER 7345.00 - WOODWARD DISTRICT EHV 345KV CKT 1'
17WP	00NR	2	'FROM->TO'	G11_049	'CIMARRON - DRAPER LAKE 345KV CKT 1'	717	0.112	101.45	'ANDERSONCO 345.00 - LACYGNE 345KV CKT 1'
17WP	00NR	2	'FROM->TO'	G11_049	'CIMARRON - DRAPER LAKE 345KV CKT 1'	717	0.112	101.33	'ANDERSONCO 345.00 - WOLF CREEK 345KV CKT 1'
17WP	00NR	2	'FROM->TO'	G11_049	'CIMARRON - DRAPER LAKE 345KV CKT 1'	717	0.112	100.34	'REDBUD - RIVERSIDE STATION 345KV CKT 1'
17WP	00NR	2	'FROM->TO'	G11_049	'CIMARRON - DRAPER LAKE 345KV CKT 1'	717	0.111	100.26	'OGE3TERM14'
12WP	00NR	2	'FROM->TO'	G11_049	'CIMARRON - DRAPER LAKE 345KV CKT 1'	717	0.111	105.00	'GRACEMONT - MINCO 345KV CKT 1'
12WP	00NR	2	'FROM->TO'	G11_049	'CIMARRON - DRAPER LAKE 345KV CKT 1'	717	0.111	104.62	'CIMARRON - MINCO 345KV CKT 1'
12WP	00NR	2	'FROM->TO'	G11_049	'CIMARRON - DRAPER LAKE 345KV CKT 1'	717	0.111	100.48	'DRAPER LAKE - SEMINOLE 345KV CKT 2'
12WP	00NR	2	'FROM->TO'	G11_049	'CIMARRON - DRAPER LAKE 345KV CKT 1'	717	0.111	100.36	'DRAPER LAKE - SEMINOLE 345KV CKT 1'
17WP	00NR	2	'FROM->TO'	G11_049	'CIMARRON - DRAPER LAKE 345KV CKT 1'	717	0.111	100.00	'OGE3TERM12'
13WP	00NR	2	'FROM->TO'	G11_049	'CIMARRON - DRAPER LAKE 345KV CKT 1'	717	0.111	106.41	'G08-13T 345.00 - SUMNERCO 345.00 345KV CKT 1'
13WP	00NR	2	'FROM->TO'	G11_049	'CIMARRON - DRAPER LAKE 345KV CKT 1'	717	0.111	106.24	'G08-13T 345.00 - WOODRING 345KV CKT 1'
17WP	00NR	2	'FROM->TO'	G11_049	'CIMARRON - DRAPER LAKE 345KV CKT 1'	717	0.111	106.14	'GEN336821 1-GRAND GULF UNIT'
17WP	00NR	2	'FROM->TO'	G11_049	'CIMARRON - DRAPER LAKE 345KV CKT 1'	717	0.111	105.78	'GEN336153 1-WATERFORD UNIT#3'
17WP	00NR	2	'FROM->TO'	G11_049	'CIMARRON - DRAPER LAKE 345KV CKT 1'	717	0.111	104.90	'GEN337911 1-ARKANSAS NUCLEAR ONE UNIT #2'
17WP	00NR	2	'FROM->TO'	G11_049	'CIMARRON - DRAPER LAKE 345KV CKT 1'	717	0.111	104.78	'GEN335831 1-RIVERBEND UNIT#1'
17WP	00NR	2	'FROM->TO'	G11_049	'CIMARRON - DRAPER LAKE 345KV CKT 1'	717	0.111	104.19	'GEN501801 1-DOLET HILLS UNIT1'
17WP	00NR	2	'FROM->TO'	G11_049	'CIMARRON - DRAPER LAKE 345KV CKT 1'	717	0.111	103.86	'GEN337910 1-ARKANSAS NUCLEAR ONE UNIT #1'
17WP	00NR	2	'FROM->TO'	G11_049	'CIMARRON - DRAPER LAKE 345KV CKT 1'	717	0.111	103.03	'GEN337652 1-WHITE BLUFF UNIT #1'
17WP	00NR	2	'FROM->TO'	G11_049	'CIMARRON - DRAPER LAKE 345KV CKT 1'	717	0.111	102.84	'GEN336252 1-NINEMILE POINT UNIT#5'
17WP	00NR	2	'FROM->TO'	G11_049	'CIMARRON - DRAPER LAKE 345KV CKT 1'	717	0.111	102.70	'GEN336251 1-NINEMILE POINT UNIT#4'
17WP	00NR	2	'FROM->TO'	G11_049	'CIMARRON - DRAPER LAKE 345KV CKT 1'	717	0.111	102.62	'GEN337653 1-WHITE BLUFF UNIT #2'
17WP	00NR	2	'FROM->TO'	G11_049	'CIMARRON - DRAPER LAKE 345KV CKT 1'	717	0.111	102.48	'GEN501813 1-RODEMACHER UNIT 3'
17WP	00NR	2	'FROM->TO'	G11_049	'CIMARRON - DRAPER LAKE 345KV CKT 1'	717	0.111	102.45	'GEN338146 1-INDEPENDENCE UNIT #2'
17WP	00NR	2	'FROM->TO'	G11_049	'CIMARRON - DRAPER LAKE 345KV CKT 1'	717	0.111	102.28	'GEN337041 1-GERALD ANDRUS'
17WP	00NR	2	'FROM->TO'	G11_049	'CIMARRON - DRAPER LAKE 345KV CKT 1'	717	0.111	102.28	'GEN338143 1-INDEPENDENCE UNIT #1'
17WP	00NR	2	'FROM->TO'	G11_049	'CIMARRON - DRAPER LAKE 345KV CKT 1'	717	0.111	101.95	'GEN335206 1-NELSON UNIT 6'
17WP	00NR	2	'FROM->TO'	G11_049	'CIMARRON - DRAPER LAKE 345KV CKT 1'	717	0.111	101.92	'GEN334440 1-SABINE UNIT 4'
17WP	00NR	2	'FROM->TO'	G11_049	'CIMARRON - DRAPER LAKE 345KV CKT 1'	717	0.111	101.91	'GEN336831 1-BAXTER WILSON SES'
17WP	00NR	2	'FROM->TO'	G11_049	'CIMARRON - DRAPER LAKE 345KV CKT 1'	717	0.111	101.89	'GEN501812 1-RODEMACHER UNIT 2'
17WP	00NR	2	'FROM->TO'	G11_049	'CIMARRON - DRAPER LAKE 345KV CKT 1'	717	0.111	101.45	'GEN334441 1-SABINE UNIT 5'
17WP	00NR	2	'FROM->TO'	G11_049	'CIMARRON - DRAPER LAKE 345KV CKT 1'	717	0.111	101.32	'GEN335204 1-NELSON UNIT 4'
17WP	00NR	2	'FROM->TO'	G11_049	'CIMARRON - DRAPER LAKE 345KV CKT 1'	717	0.111	101.06	'GEN334433 1-SABINE UNIT 3'
17WP	00NR	2	'FROM->TO'	G11_049	'CIMARRON - DRAPER LAKE 345KV CKT 1'	717	0.111	101.00	'GEN336801 1-BAXTER WILSON UNIT #1'
17WP	00NR	2	'FROM->TO'	G11_049	'CIMARRON - DRAPER LAKE 345KV CKT 1'	717	0.111	100.93	'GEN338388 1-1PLUMPT 23.000'
13WP	00NR	2	'FROM->TO'	G11_049	'CIMARRON - DRAPER LAKE 345KV CKT 1'	717	0.111	103.99	'DBL-WWRD-BVR'
13WP	00NR	2	'FROM->TO'	G11_049	'CIMARRON - DRAPER LAKE 345KV CKT 1'	717	0.111	108.77	'CANADIAN RIVER - MUSKOGEE 345KV CKT 1'
13WP	00NR	2	'FROM->TO'	G11_049	'CIMARRON - DRAPER LAKE 345KV CKT 1'	717	0.110	104.10	'CIMARRON - MATTHEWSON 345.00 345KV CKT 2'
13WP	00NR	2	'FROM->TO'	G11_049	'CIMARRON - DRAPER LAKE 345KV CKT 1'	717	0.109	103.50	'CIMARRON - MATTHEWSON 345.00 345KV CKT 1'
13WP	00NR	2	'FROM->TO'	G11_049	'CIMARRON - DRAPER LAKE 345KV CKT 1'	717	0.109	105.23	'DRAPER LAKE - SEMINOLE 345KV CKT 3'
17WP	00NR	2	'FROM->TO'	G11_049	'CIMARRON - DRAPER LAKE 345KV CKT 1'	717	0.109	100.30	'MCCLAIN - PLEASANT VALLEY 138KV CKT 1'
13WP	00NR	2	'FROM->TO'	G11_049	'CIMARRON - DRAPER LAKE 345KV CKT 1'	717	0.107	103.97	'G11_051T 345.00 - WOODWARD DISTRICT EHV 345KV CKT 1'
13WP	00NR	2	'FROM->TO'	G11_049	'CIMARRON - DRAPER LAKE 345KV CKT 1'	717	0.107	103.71	'TATONGA7 345.00 - WOODWARD DISTRICT EHV 345KV CKT 2'
13WP	00NR	2	'FROM->TO'	G11_049	'CIMARRON - DRAPER LAKE 345KV CKT 1'	717	0.107	103.38	'G11_051T 345.00 - TATONGA7 345.00 345KV CKT 1'
13WP	00NR	2	'FROM->TO'	G11_049	'CIMARRON - DRAPER LAKE 345KV CKT 1'	717	0.105	101.51	'MATTHEWSON 345.00 - TATONGA7 345.00 345KV CKT 1'
13WP	00NR	2	'FROM->TO'	G11_049	'CIMARRON - DRAPER LAKE 345KV CKT 1'	717	0.105	101.51	'MATTHEWSON 345.00 - TATONGA7 345.00 345KV CKT 2'
13WP	00NR	2	'FROM->TO'	G11_049	'CIMARRON - DRAPER LAKE 345KV CKT 1'	717	0.105	103.77	'DRAPER LAKE - SEMINOLE 345KV CKT 2'
13WP	00NR	2	'FROM->TO'	G11_049	'CIMARRON - DRAPER LAKE 345KV CKT 1'	717	0.105	103.65	'DRAPER LAKE - SEMINOLE 345KV CKT 1'
13WP	00NR	2	'FROM->TO'	G11_049	'CIMARRON - DRAPER LAKE 345KV CKT 1'	717	0.105	103.41	'MUSKOGEE - SEMINOLE 345KV CKT 1'
13WP	00NR	2	'FROM->TO'	G11_049	'CIMARRON - DRAPER LAKE 345KV CKT 1'	717	0.103	106.50	'BORDER 7345.00 - WOODWARD DISTRICT EHV 345KV CKT 1'
13WP	00NR	2	'FROM->TO'	G11_049	'CIMARRON - DRAPER LAKE 345KV CKT 1'	717	0.103	109.45	'GRACEMONT - MINCO 345KV CKT 1'
13WP	00NR	2	'FROM->TO'	G11_049	'CIMARRON - DRAPER LAKE 345KV CKT 1'	717	0.103	108.96	'CIMARRON - MINCO 345KV CKT 1'
17WP	00NR	2	'FROM->TO'	G11_049	'CIMARRON - DRAPER LAKE 345KV CKT 1'	717	0.100	101.22	'GRACEMONT - MINCO 345KV CKT 1'
17WP	00NR	2	'FROM->TO'	G11_049	'CIMARRON - DRAPER LAKE 345KV CKT 1'	717	0.100	100.67	'CIMARRON - MINCO 345KV CKT 1'
13WP	00NR	2	'FROM->TO'	G11_049	'ELK CITY 230KV (ELKCTY-6) 230/138/13.8KV TRANSFORMER CKT 1'	287	0.065	106.50	'BORDER 7345.00 - WOODWARD DISTRICT EHV 345KV CKT 1'
13WP	00NR	2	'FROM->TO'	G11_049	'ELK CITY 230KV (ELKCTY-6) 230/138/13.8KV TRANSFORMER CKT 1'	287	0.065	105.80	'BORDER 7345.00 - WOODWARD DISTRICT EHV 345KV CKT 1'
12WP	00NR	2	'FROM->TO'	G11_049	'ELK CITY 230KV (ELKCTY-6) 230/138/13.8KV TRANSFORMER CKT 1'	287	0.065	107.76	'BORDER 7345.00 - WOODWARD DISTRICT EHV 345KV CKT 1'
12WP	00NR	2	'FROM->TO'	G11_049	'ELK CITY 230KV (ELKCTY-6) 230/138/13.8KV TRANSFORMER CKT 1'	287	0.065	107.04	'BORDER 7345.00 - WOODWARD DISTRICT EHV 345KV CKT 1'
17WP	00NR	2	'FROM->TO'	G11_049	'ELK CITY 230KV (ELKCTY-6) 230/138/13.8KV TRANSFORMER CKT 1'	287	0.053	116.50	'LAWTON EASTSIDE - OKLAUNION 345KV CKT 1'
17WP	00NR	2	'FROM->TO'	G11_049	'ELK CITY 230KV (ELKCTY-6) 230/138/13.8KV TRANSFORMER CKT 1'	287	0.053	115.40	'LAWTON EASTSIDE - OKLAUNION 345KV CKT 1'
17WP	00NR	2	'FROM->TO'	G11_049	'ELK CITY 230KV (ELKCTY-6) 230/138/13.8KV TRANSFORMER CKT 1'	287	0.053	107.89	'G05-15T 345.00 - OKLAUNION 345KV CKT 1'
17WP	00NR	2	'FROM->TO'	G11_049	'ELK CITY 230KV (ELKCTY-6) 230/138/13.8KV TRANSFORMER CKT 1'	287	0.053	107.45	'G05-15T 345.00 - TUCO INTERCHANGE 345KV CKT 1'
17WP	00NR	2	'FROM->TO'	G11_049	'ELK CITY 230KV (ELKCTY-6) 230/138/13.8KV TRANSFORMER CKT 1'	287	0.053	107.13	'G05-15T 345.00 - OKLAUNION 345KV CKT 1'
17WP	00NR	2	'FROM->TO'	G11_049	'ELK CITY 230KV (ELKCTY-6) 230/138/13.8KV TRANSFORMER CKT 1'	287	0.053	106.71	'G05-15T 345.00 - TUCO INTERCHANGE 345KV CKT 1'
17WP	00NR	2	'FROM->TO'	G11_049	'GRAPEVINE INTERCHANGE - STATELINE INTERCHANGE 230KV CKT 1'	361	0.053	101.60	'LAWTON EASTSIDE - OKLAUNION 345KV CKT 1'
12WP	00NR	2	'FROM->TO'	G11_049	'ELK CITY 230KV (ELKCTY-6) 230/138/13.8KV TRANSFORMER CKT 1'	287	0.053	130.55	'LAWTON EASTSIDE - OKLAUNION 345KV CKT 1'
12WP	00NR	2	'FROM->TO'	G11_049	'ELK CITY 230KV (ELKCTY-6) 230/138/13.8KV TRANSFORMER CKT 1'	287	0.053	128.49	'LAWTON EASTSIDE - OKLAUNION 345KV CKT 1'

SEASON	GROUP	SCENARIO	DIRECTION	SOURCE	MONITORED ELEMENT	RATE B (MVA)	TDF	(%MVA) LOADING	CONTINGENCY
12WP	00NR	2	'FROM->TO'	G11_049	'ELK CITY 230KV (ELKCTY-6) 230/138/13.8KV TRANSFORMER CKT 1'	287	0.053	121.29	'G05-15T 345.00 - OKLAUNION 345KV CKT 1'
12WP	00NR	2	'FROM->TO'	G11_049	'ELK CITY 230KV (ELKCTY-6) 230/138/13.8KV TRANSFORMER CKT 1'	287	0.053	120.77	'G05-15T 345.00 - TUCO INTERCHANGE 345KV CKT 1'
12WP	00NR	2	'FROM->TO'	G11_049	'ELK CITY 230KV (ELKCTY-6) 230/138/13.8KV TRANSFORMER CKT 1'	287	0.053	119.89	'G05-15T 345.00 - OKLAUNION 345KV CKT 1'
12WP	00NR	2	'FROM->TO'	G11_049	'ELK CITY 230KV (ELKCTY-6) 230/138/13.8KV TRANSFORMER CKT 1'	287	0.053	119.40	'G05-15T 345.00 - TUCO INTERCHANGE 345KV CKT 1'
12WP	00NR	2	'FROM->TO'	G11_049	'GRAPEVINE INTERCHANGE - STATELINE INTERCHANGE 230KV CKT 1'	361	0.053	115.30	'LAWTON EASTSIDE - OKLAUNION 345KV CKT 1'
12WP	00NR	2	'FROM->TO'	G11_049	'GRAPEVINE INTERCHANGE - STATELINE INTERCHANGE 230KV CKT 1'	361	0.053	105.17	'G05-15T 345.00 - OKLAUNION 345KV CKT 1'
12WP	00NR	2	'FROM->TO'	G11_049	'GRAPEVINE INTERCHANGE - STATELINE INTERCHANGE 230KV CKT 1'	361	0.053	104.60	'G05-15T 345.00 - TUCO INTERCHANGE 345KV CKT 1'
13WP	00NR	2	'FROM->TO'	G11_049	'ELK CITY 230KV (ELKCTY-6) 230/138/13.8KV TRANSFORMER CKT 1'	287	0.053	129.10	'LAWTON EASTSIDE - OKLAUNION 345KV CKT 1'
13WP	00NR	2	'FROM->TO'	G11_049	'ELK CITY 230KV (ELKCTY-6) 230/138/13.8KV TRANSFORMER CKT 1'	287	0.053	127.14	'LAWTON EASTSIDE - OKLAUNION 345KV CKT 1'
13WP	00NR	2	'FROM->TO'	G11_049	'ELK CITY 230KV (ELKCTY-6) 230/138/13.8KV TRANSFORMER CKT 1'	287	0.053	119.98	'G05-15T 345.00 - OKLAUNION 345KV CKT 1'
13WP	00NR	2	'FROM->TO'	G11_049	'ELK CITY 230KV (ELKCTY-6) 230/138/13.8KV TRANSFORMER CKT 1'	287	0.053	119.42	'G05-15T 345.00 - TUCO INTERCHANGE 345KV CKT 1'
13WP	00NR	2	'FROM->TO'	G11_049	'ELK CITY 230KV (ELKCTY-6) 230/138/13.8KV TRANSFORMER CKT 1'	287	0.053	118.65	'G05-15T 345.00 - OKLAUNION 345KV CKT 1'
13WP	00NR	2	'FROM->TO'	G11_049	'ELK CITY 230KV (ELKCTY-6) 230/138/13.8KV TRANSFORMER CKT 1'	287	0.053	118.12	'G05-15T 345.00 - TUCO INTERCHANGE 345KV CKT 1'
13WP	00NR	2	'FROM->TO'	G11_049	'GRAPEVINE INTERCHANGE - STATELINE INTERCHANGE 230KV CKT 1'	361	0.053	113.83	'LAWTON EASTSIDE - OKLAUNION 345KV CKT 1'
13WP	00NR	2	'FROM->TO'	G11_049	'GRAPEVINE INTERCHANGE - STATELINE INTERCHANGE 230KV CKT 1'	361	0.053	103.94	'G05-15T 345.00 - OKLAUNION 345KV CKT 1'
13WP	00NR	2	'FROM->TO'	G11_049	'GRAPEVINE INTERCHANGE - STATELINE INTERCHANGE 230KV CKT 1'	361	0.053	103.35	'G05-15T 345.00 - TUCO INTERCHANGE 345KV CKT 1'
13WP	00NR	2	'FROM->TO'	G11_049	'CLEO CORNER - MEN TAP 138KV CKT 1'	191	0.051	133.33	'DBL-MATT-TAT'
17WP	00NR	2	'FROM->TO'	G11_049	'CLEO CORNER - MEN TAP 138KV CKT 1'	191	0.051	125.26	'DBL-MATT-TAT'
12SP	00NR	2	'FROM->TO'	G11_049	'CLEO CORNER - MEN TAP 138KV CKT 1'	191	0.051	109.67	'DBL-MATT-TAT'
13SP	00NR	2	'FROM->TO'	G11_049	'CLEO CORNER - MEN TAP 138KV CKT 1'	191	0.050	108.57	'DBL-MATT-TAT'
17WP	00NR	2	'FROM->TO'	G11_049	'ELK CITY 230KV (ELKCTY-6) 230/138/13.8KV TRANSFORMER CKT 1'	287	0.050	110.18	'DBL-MATT-TAT'
17WP	00NR	2	'FROM->TO'	G11_049	'ELK CITY 230KV (ELKCTY-6) 230/138/13.8KV TRANSFORMER CKT 1'	287	0.050	109.75	'DBL-MATT-TAT'
13WP	00NR	2	'FROM->TO'	G11_049	'ELK CITY 230KV (ELKCTY-6) 230/138/13.8KV TRANSFORMER CKT 1'	287	0.050	122.56	'DBL-MATT-TAT'
13WP	00NR	2	'FROM->TO'	G11_049	'ELK CITY 230KV (ELKCTY-6) 230/138/13.8KV TRANSFORMER CKT 1'	287	0.050	121.56	'DBL-MATT-TAT'
13WP	00NR	2	'FROM->TO'	G11_049	'GRAPEVINE INTERCHANGE - STATELINE INTERCHANGE 230KV CKT 1'	361	0.050	108.67	'DBL-MATT-TAT'
12SP	00NR	2	'TO->FROM'	G11_049	'ROMAN NOSE - SOUTHARD 138KV CKT 1'	153	0.050	127.01	'DBL-MATT-TAT'
12SP	00NR	2	'TO->FROM'	G11_049	'EL RENO - ROMAN NOSE 138KV CKT 1'	153	0.050	123.14	'DBL-MATT-TAT'
13SP	00NR	2	'TO->FROM'	G11_049	'ROMAN NOSE - SOUTHARD 138KV CKT 1'	153	0.049	124.07	'DBL-MATT-TAT'
13SP	00NR	2	'TO->FROM'	G11_049	'EL RENO - ROMAN NOSE 138KV CKT 1'	153	0.049	120.49	'DBL-MATT-TAT'
13WP	00NR	2	'TO->FROM'	G11_049	'ROMAN NOSE - SOUTHARD 138KV CKT 1'	185	0.047	128.82	'DBL-MATT-TAT'
13WP	00NR	2	'TO->FROM'	G11_049	'EL RENO - ROMAN NOSE 138KV CKT 1'	185	0.047	122.76	'DBL-MATT-TAT'
17WP	00NR	2	'TO->FROM'	G11_049	'ROMAN NOSE - SOUTHARD 138KV CKT 1'	185	0.047	119.28	'DBL-MATT-TAT'
17WP	00NR	2	'TO->FROM'	G11_049	'EL RENO - ROMAN NOSE 138KV CKT 1'	185	0.047	113.50	'DBL-MATT-TAT'
17WP	00NR	2	'TO->FROM'	G11_049	'GLASS MOUNTAIN - MOORELAND 138KV CKT 1'	152	0.044	156.40	'DBL-MATT-TAT'
17WP	00NR	2	'TO->FROM'	G11_049	'CLEO CORNER - GLASS MOUNTAIN 138KV CKT 1'	185	0.044	125.78	'DBL-MATT-TAT'
12SP	00NR	2	'TO->FROM'	G11_049	'GLASS MOUNTAIN - MOORELAND 138KV CKT 1'	152	0.044	142.73	'DBL-MATT-TAT'
12SP	00NR	2	'TO->FROM'	G11_049	'CLEO CORNER - GLASS MOUNTAIN 138KV CKT 1'	153	0.044	137.01	'DBL-MATT-TAT'
13WP	00NR	2	'TO->FROM'	G11_049	'GLASS MOUNTAIN - MOORELAND 138KV CKT 1'	152	0.044	164.77	'DBL-MATT-TAT'
13WP	00NR	2	'TO->FROM'	G11_049	'CLEO CORNER - GLASS MOUNTAIN 138KV CKT 1'	185	0.044	132.65	'DBL-MATT-TAT'
13SP	00NR	2	'TO->FROM'	G11_049	'GLASS MOUNTAIN - MOORELAND 138KV CKT 1'	152	0.044	141.58	'DBL-MATT-TAT'
13SP	00NR	2	'TO->FROM'	G11_049	'CLEO CORNER - GLASS MOUNTAIN 138KV CKT 1'	153	0.044	135.83	'DBL-MATT-TAT'
17WP	00NR	2	'FROM->TO'	G11_049	'ELK CITY 230KV (ELKCTY-6) 230/138/13.8KV TRANSFORMER CKT 1'	287	0.044	101.64	'DBL-WWRD-BVR'
17WP	00NR	2	'FROM->TO'	G11_049	'ELK CITY 230KV (ELKCTY-6) 230/138/13.8KV TRANSFORMER CKT 1'	287	0.044	101.11	'DBL-WWRD-BVR'
17WP	00NR	2	'TO->FROM'	G11_049	'DOVER SW - OKEENE 138KV CKT 1'	143	0.043	144.11	'DBL-MATT-TAT'
13WP	00NR	2	'FROM->TO'	G11_049	'ELK CITY 230KV (ELKCTY-6) 230/138/13.8KV TRANSFORMER CKT 1'	287	0.043	113.96	'DBL-WWRD-BVR'
13WP	00NR	2	'FROM->TO'	G11_049	'ELK CITY 230KV (ELKCTY-6) 230/138/13.8KV TRANSFORMER CKT 1'	287	0.043	112.90	'DBL-WWRD-BVR'
12SP	00NR	2	'FROM->TO'	G11_049	'NORTHWEST (NORTWST2) 345/138/13.8KV TRANSFORMER CKT 1'	493	0.042	118.61	'NORTHWEST (NORTWST3) 345/138/13.8KV TRANSFORMER CKT 1'
12SP	00NR	2	'FROM->TO'	G11_049	'NORTHWEST (NORTWST2) 345/138/13.8KV TRANSFORMER CKT 1'	493	0.042	116.26	'NORTHWEST (NORTWST3) 345/138/13.8KV TRANSFORMER CKT 1'
13SP	00NR	2	'FROM->TO'	G11_049	'NORTHWEST (NORTWST2) 345/138/13.8KV TRANSFORMER CKT 1'	493	0.042	115.78	'NORTHWEST (NORTWST3) 345/138/13.8KV TRANSFORMER CKT 1'
13SP	00NR	2	'FROM->TO'	G11_049	'NORTHWEST (NORTWST2) 345/138/13.8KV TRANSFORMER CKT 1'	493	0.042	113.29	'NORTHWEST (NORTWST3) 345/138/13.8KV TRANSFORMER CKT 1'
13WP	00NR	2	'FROM->TO'	G11_049	'ELK CITY 230KV (ELKCTY-6) 230/138/13.8KV TRANSFORMER CKT 1'	287	0.041	100.65	'BEAVER CO 345.00 - Hitchland Interchange 345KV CKT 1'
13WP	00NR	2	'FROM->TO'	G11_049	'ELK CITY 230KV (ELKCTY-6) 230/138/13.8KV TRANSFORMER CKT 1'	287	0.041	100.22	'BEAVER CO 345.00 - Hitchland Interchange 345KV CKT 1'
12WP	00NR	2	'FROM->TO'	G11_049	'ELK CITY 230KV (ELKCTY-6) 230/138/13.8KV TRANSFORMER CKT 1'	287	0.041	101.95	'BEAVER CO 345.00 - Hitchland Interchange 345KV CKT 1'
12WP	00NR	2	'FROM->TO'	G11_049	'ELK CITY 230KV (ELKCTY-6) 230/138/13.8KV TRANSFORMER CKT 1'	287	0.041	101.47	'BEAVER CO 345.00 - Hitchland Interchange 345KV CKT 1'
12SP	00NR	2	'FROM->TO'	G11_049	'NORTHWEST (NORTWST3) 345/138/13.8KV TRANSFORMER CKT 1'	493	0.041	108.66	'NORTHWEST (NORTWST2) 345/138/13.8KV TRANSFORMER CKT 1'
12SP	00NR	2	'FROM->TO'	G11_049	'NORTHWEST (NORTWST3) 345/138/13.8KV TRANSFORMER CKT 1'	493	0.041	106.49	'NORTHWEST (NORTWST2) 345/138/13.8KV TRANSFORMER CKT 1'
13SP	00NR	2	'FROM->TO'	G11_049	'NORTHWEST (NORTWST3) 345/138/13.8KV TRANSFORMER CKT 1'	493	0.041	105.98	'NORTHWEST (NORTWST2) 345/138/13.8KV TRANSFORMER CKT 1'
13SP	00NR	2	'FROM->TO'	G11_049	'NORTHWEST (NORTWST3) 345/138/13.8KV TRANSFORMER CKT 1'	493	0.041	103.69	'NORTHWEST (NORTWST2) 345/138/13.8KV TRANSFORMER CKT 1'
13WP	00NR	2	'FROM->TO'	G11_049	'ELK CITY 230KV (ELKCTY-6) 230/138/13.8KV TRANSFORMER CKT 1'	287	0.041	102.30	'DBL-FINY-HOL'
13WP	00NR	2	'FROM->TO'	G11_049	'ELK CITY 230KV (ELKCTY-6) 230/138/13.8KV TRANSFORMER CKT 1'	287	0.041	101.80	'DBL-FINY-HOL'
13WP	00NR	2	'FROM->TO'	G11_049	'ELK CITY 230KV (ELKCTY-6) 230/138/13.8KV TRANSFORMER CKT 1'	287	0.041	101.43	'FINNEY SWITCHING STATION - STEVENSCO 345.00 345KV CKT 1'
13WP	00NR	2	'FROM->TO'	G11_049	'ELK CITY 230KV (ELKCTY-6) 230/138/13.8KV TRANSFORMER CKT 1'	287	0.041	100.98	'Hitchland Interchange - STEVENSCO 345.00 345KV CKT 1'
13WP	00NR	2	'FROM->TO'	G11_049	'ELK CITY 230KV (ELKCTY-6) 230/138/13.8KV TRANSFORMER CKT 1'	287	0.041	100.98	'FINNEY SWITCHING STATION - STEVENSCO 345.00 345KV CKT 1'
13WP	00NR	2	'FROM->TO'	G11_049	'ELK CITY 230KV (ELKCTY-6) 230/138/13.8KV TRANSFORMER CKT 1'	287	0.041	100.55	'Hitchland Interchange - STEVENSCO 345.00 345KV CKT 1'
12WP	00NR	2	'FROM->TO'	G11_049	'ELK CITY 230KV (ELKCTY-6) 230/138/13.8KV TRANSFORMER CKT 1'	287	0.041	102.72	'FINNEY SWITCHING STATION - STEVENSCO 345.00 345KV CKT 1'
12WP	00NR	2	'FROM->TO'	G11_049	'ELK CITY 230KV (ELKCTY-6) 230/138/13.8KV TRANSFORMER CKT 1'	287	0.041	102.28	'Hitchland Interchange - STEVENSCO 345.00 345KV CKT 1'
12WP	00NR	2	'FROM->TO'	G11_049	'ELK CITY 230KV (ELKCTY-6) 230/138/13.8KV TRANSFORMER CKT 1'	287	0.041	102.22	'FINNEY SWITCHING STATION - STEVENSCO 345.00 345KV CKT 1'
12WP	00NR	2	'FROM->TO'	G11_049	'ELK CITY 230KV (ELKCTY-6) 230/138/13.8KV TRANSFORMER CKT 1'	287	0.041	101.81	'Hitchland Interchange - STEVENSCO 345.00 345KV CKT 1'
17WP	00NR	2	'TO->FROM'	G11_049	'CLINTON JUNCTION - ELK CITY 138KV CKT 1'	210	0.041	106.03	'DBL-MATT-TAT'
13WP	00NR	2	'TO->FROM'	G11_049	'CLINTON JUNCTION - ELK CITY 138KV CKT 1'	210	0.040	113.89	'DBL-MATT-TAT'
17WP	00NR	2	'TO->FROM'	G11_049	'CEDARDALE - MOORELAND 138KV CKT 1'	214	0.040	104.98	'DBL-MATT-TAT'
17WP	00NR	2	'FROM->TO'	G11_049	'CEDARDALE - OKEENE 138KV CKT 1'	214	0.040	103.80	'DBL-MATT-TAT'
13WP	00NR	2	'FROM->TO'	G11_049	'ELK CITY 230KV (ELKCTY-6) 230/138/13.8KV TRANSFORMER CKT 1'	287	0.040	105.95	'CHILDRESS - LAKE PAULINE 138KV CKT 1'
13WP	00NR	2	'FROM->TO'	G11_049	'ELK CITY 230KV (ELKCTY-6) 230/138/13.8KV TRANSFORMER CKT 1'	287	0.040	105.37	'CHILDRESS - LAKE PAULINE 138KV CKT 1'
12WP	00NR	2	'FROM->TO'	G11_049	'ELK CITY 230KV (ELKCTY-6) 230/138/13.8KV TRANSFORMER CKT 1'	287	0.040	107.24	'CHILDRESS - LAKE PAULINE 138KV CKT 1'
12WP	00NR	2	'FROM->TO'	G11_049	'ELK CITY 230KV (ELKCTY-6) 230/138/13.8KV TRANSFORMER CKT 1'	287	0.040	106.60	'CHILDRESS - LAKE PAULINE 138KV CKT 1'
12WP	00NR	2	'FROM->TO'	G11_049	'ELK CITY 230KV (ELKCTY-6) 230/138/13.8KV TRANSFORMER CKT 1'	287	0.040	109.69	'MOORELAND - NINE MILE 138KV CKT 1'
12WP	00NR	2	'FROM->TO'	G11_049	'ELK CITY 230KV (ELKCTY-6) 230/138/13.8KV TRANSFORMER CKT 1'	287	0.040	109.64	'MOREWOOD SW - NINE MILE 138KV CKT 1'

SEASON	GROUP	SCENARIO	DIRECTION	SOURCE	MONITORED ELEMENT	RATE B (MVA)	TDF	(%MVA) LOADING	CONTINGENCY
12WP	00NR	2	'FROM->TO'	G11_049	'ELK CITY 230KV (ELKCTY-6) 230/138/13.8KV TRANSFORMER CKT 1'	287	0.040	108.70	'MOORELAND - NINE MILE 138KV CKT 1'
12WP	00NR	2	'FROM->TO'	G11_049	'ELK CITY 230KV (ELKCTY-6) 230/138/13.8KV TRANSFORMER CKT 1'	287	0.040	108.66	'MOREWOOD SW - NINE MILE 138KV CKT 1'
13WP	00NR	2	'FROM->TO'	G11_049	'ELK CITY 230KV (ELKCTY-6) 230/138/13.8KV TRANSFORMER CKT 1'	287	0.040	108.57	'MOORELAND - NINE MILE 138KV CKT 1'
13WP	00NR	2	'FROM->TO'	G11_049	'ELK CITY 230KV (ELKCTY-6) 230/138/13.8KV TRANSFORMER CKT 1'	287	0.040	108.52	'MOREWOOD SW - NINE MILE 138KV CKT 1'
13WP	00NR	2	'FROM->TO'	G11_049	'ELK CITY 230KV (ELKCTY-6) 230/138/13.8KV TRANSFORMER CKT 1'	287	0.040	107.63	'MOORELAND - NINE MILE 138KV CKT 1'
13WP	00NR	2	'FROM->TO'	G11_049	'ELK CITY 230KV (ELKCTY-6) 230/138/13.8KV TRANSFORMER CKT 1'	287	0.040	107.59	'MOREWOOD SW - NINE MILE 138KV CKT 1'
13WP	00NR	2	'FROM->TO'	G11_049	'ELK CITY 230KV (ELKCTY-6) 230/138/13.8KV TRANSFORMER CKT 1'	287	0.040	103.36	'Hitchland Interchange - WOODWARD DISTRICT EHV 345KV CKT 2'
13WP	00NR	2	'FROM->TO'	G11_049	'ELK CITY 230KV (ELKCTY-6) 230/138/13.8KV TRANSFORMER CKT 1'	287	0.040	102.82	'Hitchland Interchange - WOODWARD DISTRICT EHV 345KV CKT 2'
12WP	00NR	2	'FROM->TO'	G11_049	'ELK CITY 230KV (ELKCTY-6) 230/138/13.8KV TRANSFORMER CKT 1'	287	0.040	104.62	'Hitchland Interchange - WOODWARD DISTRICT EHV 345KV CKT 2'
12WP	00NR	2	'FROM->TO'	G11_049	'ELK CITY 230KV (ELKCTY-6) 230/138/13.8KV TRANSFORMER CKT 1'	287	0.040	104.04	'Hitchland Interchange - WOODWARD DISTRICT EHV 345KV CKT 2'
13WP	00NR	2	'FROM->TO'	G11_049	'ELK CITY 230KV (ELKCTY-6) 230/138/13.8KV TRANSFORMER CKT 1'	287	0.040	102.42	'GRAY CO 345.00 - SPEARVILLE 345KV CKT 1'
13WP	00NR	2	'FROM->TO'	G11_049	'ELK CITY 230KV (ELKCTY-6) 230/138/13.8KV TRANSFORMER CKT 1'	287	0.040	101.94	'GRAY CO 345.00 - SPEARVILLE 345KV CKT 1'
12WP	00NR	2	'FROM->TO'	G11_049	'ELK CITY 230KV (ELKCTY-6) 230/138/13.8KV TRANSFORMER CKT 1'	287	0.040	103.69	'GRAY CO 345.00 - SPEARVILLE 345KV CKT 1'
12WP	00NR	2	'FROM->TO'	G11_049	'ELK CITY 230KV (ELKCTY-6) 230/138/13.8KV TRANSFORMER CKT 1'	287	0.040	103.17	'GRAY CO 345.00 - SPEARVILLE 345KV CKT 1'
13WP	00NR	2	'FROM->TO'	G11_049	'ELK CITY 230KV (ELKCTY-6) 230/138/13.8KV TRANSFORMER CKT 1'	287	0.040	103.59	'MATTHEWSON 345.00 - TATONGA7 345.00 345KV CKT 1'
13WP	00NR	2	'FROM->TO'	G11_049	'ELK CITY 230KV (ELKCTY-6) 230/138/13.8KV TRANSFORMER CKT 1'	287	0.040	103.59	'MATTHEWSON 345.00 - TATONGA7 345.00 345KV CKT 2'
13WP	00NR	2	'FROM->TO'	G11_049	'ELK CITY 230KV (ELKCTY-6) 230/138/13.8KV TRANSFORMER CKT 1'	287	0.040	103.10	'MATTHEWSON 345.00 - TATONGA7 345.00 345KV CKT 1'
13WP	00NR	2	'FROM->TO'	G11_049	'ELK CITY 230KV (ELKCTY-6) 230/138/13.8KV TRANSFORMER CKT 1'	287	0.040	103.10	'MATTHEWSON 345.00 - TATONGA7 345.00 345KV CKT 2'
12WP	00NR	2	'FROM->TO'	G11_049	'ELK CITY 230KV (ELKCTY-6) 230/138/13.8KV TRANSFORMER CKT 1'	287	0.040	104.74	'MATTHEWSON 345.00 - TATONGA7 345.00 345KV CKT 1'
12WP	00NR	2	'FROM->TO'	G11_049	'ELK CITY 230KV (ELKCTY-6) 230/138/13.8KV TRANSFORMER CKT 1'	287	0.040	104.74	'MATTHEWSON 345.00 - TATONGA7 345.00 345KV CKT 2'
12WP	00NR	2	'FROM->TO'	G11_049	'ELK CITY 230KV (ELKCTY-6) 230/138/13.8KV TRANSFORMER CKT 1'	287	0.040	104.22	'MATTHEWSON 345.00 - TATONGA7 345.00 345KV CKT 1'
12WP	00NR	2	'FROM->TO'	G11_049	'ELK CITY 230KV (ELKCTY-6) 230/138/13.8KV TRANSFORMER CKT 1'	287	0.040	104.22	'MATTHEWSON 345.00 - TATONGA7 345.00 345KV CKT 2'
13WP	00NR	2	'FROM->TO'	G11_049	'ELK CITY 230KV (ELKCTY-6) 230/138/13.8KV TRANSFORMER CKT 1'	287	0.039	101.70	'G11_051T 345.00 - TATONGA7 345.00 345KV CKT 1'
13WP	00NR	2	'FROM->TO'	G11_049	'ELK CITY 230KV (ELKCTY-6) 230/138/13.8KV TRANSFORMER CKT 1'	287	0.039	101.49	'TATONGA7 345.00 - WOODWARD DISTRICT EHV 345KV CKT 2'
13WP	00NR	2	'FROM->TO'	G11_049	'ELK CITY 230KV (ELKCTY-6) 230/138/13.8KV TRANSFORMER CKT 1'	287	0.039	101.28	'G11_051T 345.00 - TATONGA7 345.00 345KV CKT 1'
13WP	00NR	2	'FROM->TO'	G11_049	'ELK CITY 230KV (ELKCTY-6) 230/138/13.8KV TRANSFORMER CKT 1'	287	0.039	101.23	'G11_051T 345.00 - WOODWARD DISTRICT EHV 345KV CKT 1'
13WP	00NR	2	'FROM->TO'	G11_049	'ELK CITY 230KV (ELKCTY-6) 230/138/13.8KV TRANSFORMER CKT 1'	287	0.039	101.07	'TATONGA7 345.00 - WOODWARD DISTRICT EHV 345KV CKT 2'
13WP	00NR	2	'FROM->TO'	G11_049	'ELK CITY 230KV (ELKCTY-6) 230/138/13.8KV TRANSFORMER CKT 1'	287	0.039	100.82	'G11_051T 345.00 - WOODWARD DISTRICT EHV 345KV CKT 1'
12WP	00NR	2	'FROM->TO'	G11_049	'ELK CITY 230KV (ELKCTY-6) 230/138/13.8KV TRANSFORMER CKT 1'	287	0.039	102.88	'G11_051T 345.00 - TATONGA7 345.00 345KV CKT 1'
12WP	00NR	2	'FROM->TO'	G11_049	'ELK CITY 230KV (ELKCTY-6) 230/138/13.8KV TRANSFORMER CKT 1'	287	0.039	102.68	'TATONGA7 345.00 - WOODWARD DISTRICT EHV 345KV CKT 2'
12WP	00NR	2	'FROM->TO'	G11_049	'ELK CITY 230KV (ELKCTY-6) 230/138/13.8KV TRANSFORMER CKT 1'	287	0.039	102.45	'G11_051T 345.00 - WOODWARD DISTRICT EHV 345KV CKT 1'
12WP	00NR	2	'FROM->TO'	G11_049	'ELK CITY 230KV (ELKCTY-6) 230/138/13.8KV TRANSFORMER CKT 1'	287	0.039	102.43	'G11_051T 345.00 - TATONGA7 345.00 345KV CKT 1'
12WP	00NR	2	'FROM->TO'	G11_049	'ELK CITY 230KV (ELKCTY-6) 230/138/13.8KV TRANSFORMER CKT 1'	287	0.039	102.23	'TATONGA7 345.00 - WOODWARD DISTRICT EHV 345KV CKT 2'
12WP	00NR	2	'FROM->TO'	G11_049	'ELK CITY 230KV (ELKCTY-6) 230/138/13.8KV TRANSFORMER CKT 1'	287	0.039	102.00	'G11_051T 345.00 - WOODWARD DISTRICT EHV 345KV CKT 1'
13WP	00NR	2	'FROM->TO'	G11_049	'ELK CITY 230KV (ELKCTY-6) 230/138/13.8KV TRANSFORMER CKT 1'	287	0.039	104.62	'KIRBY SWITCHING STATION - MCCLELLAN SUB 115KV CKT 1'
13WP	00NR	2	'FROM->TO'	G11_049	'ELK CITY 230KV (ELKCTY-6) 230/138/13.8KV TRANSFORMER CKT 1'	287	0.039	104.46	'MCCLELLAN SUB - MCLEAN RURAL SUB 115KV CKT 1'
13WP	00NR	2	'FROM->TO'	G11_049	'ELK CITY 230KV (ELKCTY-6) 230/138/13.8KV TRANSFORMER CKT 1'	287	0.039	104.07	'KIRBY SWITCHING STATION - MCCLELLAN SUB 115KV CKT 1'
13WP	00NR	2	'FROM->TO'	G11_049	'ELK CITY 230KV (ELKCTY-6) 230/138/13.8KV TRANSFORMER CKT 1'	287	0.039	103.91	'MCCLELLAN SUB - MCLEAN RURAL SUB 115KV CKT 1'
13WP	00NR	2	'FROM->TO'	G11_049	'ELK CITY 230KV (ELKCTY-6) 230/138/13.8KV TRANSFORMER CKT 1'	287	0.039	103.55	'SHAMROCK (SHAMRCK2) 138/69/14.4KV TRANSFORMER CKT 1'
13WP	00NR	2	'FROM->TO'	G11_049	'ELK CITY 230KV (ELKCTY-6) 230/138/13.8KV TRANSFORMER CKT 1'	287	0.039	103.48	'SHAMROCK - WELLINGTON 138KV CKT 1'
13WP	00NR	2	'FROM->TO'	G11_049	'ELK CITY 230KV (ELKCTY-6) 230/138/13.8KV TRANSFORMER CKT 1'	287	0.039	103.04	'SHAMROCK (SHAMRCK2) 138/69/14.4KV TRANSFORMER CKT 1'
13WP	00NR	2	'FROM->TO'	G11_049	'ELK CITY 230KV (ELKCTY-6) 230/138/13.8KV TRANSFORMER CKT 1'	287	0.039	102.99	'HOLLIS TAP - WELLINGTON 138KV CKT 1'
13WP	00NR	2	'FROM->TO'	G11_049	'ELK CITY 230KV (ELKCTY-6) 230/138/13.8KV TRANSFORMER CKT 1'	287	0.039	102.98	'SHAMROCK - WELLINGTON 138KV CKT 1'
13WP	00NR	2	'FROM->TO'	G11_049	'ELK CITY 230KV (ELKCTY-6) 230/138/13.8KV TRANSFORMER CKT 1'	287	0.039	102.83	'CHILDRESS - HOLLIS TAP 138KV CKT 1'
13WP	00NR	2	'FROM->TO'	G11_049	'ELK CITY 230KV (ELKCTY-6) 230/138/13.8KV TRANSFORMER CKT 1'	287	0.039	102.50	'HOLLIS TAP - WELLINGTON 138KV CKT 1'
13WP	00NR	2	'FROM->TO'	G11_049	'ELK CITY 230KV (ELKCTY-6) 230/138/13.8KV TRANSFORMER CKT 1'	287	0.039	102.34	'CHILDRESS - HOLLIS TAP 138KV CKT 1'
12WP	00NR	2	'FROM->TO'	G11_049	'ELK CITY 230KV (ELKCTY-6) 230/138/13.8KV TRANSFORMER CKT 1'	287	0.039	105.83	'KIRBY SWITCHING STATION - MCCLELLAN SUB 115KV CKT 1'
12WP	00NR	2	'FROM->TO'	G11_049	'ELK CITY 230KV (ELKCTY-6) 230/138/13.8KV TRANSFORMER CKT 1'	287	0.039	105.67	'MCCLELLAN SUB - MCLEAN RURAL SUB 115KV CKT 1'
12WP	00NR	2	'FROM->TO'	G11_049	'ELK CITY 230KV (ELKCTY-6) 230/138/13.8KV TRANSFORMER CKT 1'	287	0.039	105.24	'KIRBY SWITCHING STATION - MCCLELLAN SUB 115KV CKT 1'
12WP	00NR	2	'FROM->TO'	G11_049	'ELK CITY 230KV (ELKCTY-6) 230/138/13.8KV TRANSFORMER CKT 1'	287	0.039	105.08	'MCCLELLAN SUB - MCLEAN RURAL SUB 115KV CKT 1'
12WP	00NR	2	'FROM->TO'	G11_049	'ELK CITY 230KV (ELKCTY-6) 230/138/13.8KV TRANSFORMER CKT 1'	287	0.039	104.77	'SHAMROCK (SHAMRCK2) 138/69/14.4KV TRANSFORMER CKT 1'
12WP	00NR	2	'FROM->TO'	G11_049	'ELK CITY 230KV (ELKCTY-6) 230/138/13.8KV TRANSFORMER CKT 1'	287	0.039	104.70	'SHAMROCK - WELLINGTON 138KV CKT 1'
12WP	00NR	2	'FROM->TO'	G11_049	'ELK CITY 230KV (ELKCTY-6) 230/138/13.8KV TRANSFORMER CKT 1'	287	0.039	104.23	'SHAMROCK (SHAMRCK2) 138/69/14.4KV TRANSFORMER CKT 1'
12WP	00NR	2	'FROM->TO'	G11_049	'ELK CITY 230KV (ELKCTY-6) 230/138/13.8KV TRANSFORMER CKT 1'	287	0.039	104.21	'HOLLIS TAP - WELLINGTON 138KV CKT 1'
12WP	00NR	2	'FROM->TO'	G11_049	'ELK CITY 230KV (ELKCTY-6) 230/138/13.8KV TRANSFORMER CKT 1'	287	0.039	104.16	'SHAMROCK - WELLINGTON 138KV CKT 1'
12WP	00NR	2	'FROM->TO'	G11_049	'ELK CITY 230KV (ELKCTY-6) 230/138/13.8KV TRANSFORMER CKT 1'	287	0.039	104.06	'CHILDRESS - HOLLIS TAP 138KV CKT 1'
13WP	00NR	2	'FROM->TO'	G11_049	'ELK CITY 230KV (ELKCTY-6) 230/138/13.8KV TRANSFORMER CKT 1'	287	0.039	103.87	'DBL-WICH-THI'
12WP	00NR	2	'FROM->TO'	G11_049	'ELK CITY 230KV (ELKCTY-6) 230/138/13.8KV TRANSFORMER CKT 1'	287	0.039	103.68	'HOLLIS TAP - WELLINGTON 138KV CKT 1'
12WP	00NR	2	'FROM->TO'	G11_049	'ELK CITY 230KV (ELKCTY-6) 230/138/13.8KV TRANSFORMER CKT 1'	287	0.039	103.53	'CHILDRESS - HOLLIS TAP 138KV CKT 1'
13WP	00NR	2	'FROM->TO'	G11_049	'ELK CITY 230KV (ELKCTY-6) 230/138/13.8KV TRANSFORMER CKT 1'	287	0.039	103.38	'DBL-WICH-THI'
13WP	00NR	2	'FROM->TO'	G11_049	'ELK CITY 230KV (ELKCTY-6) 230/138/13.8KV TRANSFORMER CKT 1'	287	0.039	103.27	'ELK CITY - RED HILLS WIND 138KV CKT 1'
13WP	00NR	2	'FROM->TO'	G11_049	'ELK CITY 230KV (ELKCTY-6) 230/138/13.8KV TRANSFORMER CKT 1'	287	0.039	102.79	'MOREWOOD SW - RED HILLS WIND 138KV CKT 1'
13WP	00NR	2	'FROM->TO'	G11_049	'ELK CITY 230KV (ELKCTY-6) 230/138/13.8KV TRANSFORMER CKT 1'	287	0.039	102.73	'ELK CITY - RED HILLS WIND 138KV CKT 1'
13WP	00NR	2	'FROM->TO'	G11_049	'ELK CITY 230KV (ELKCTY-6) 230/138/13.8KV TRANSFORMER CKT 1'	287	0.039	102.23	'MOREWOOD SW - RED HILLS WIND 138KV CKT 1'
12WP	00NR	2	'FROM->TO'	G11_049	'ELK CITY 230KV (ELKCTY-6) 230/138/13.8KV TRANSFORMER CKT 1'	287	0.038	104.40	'ELK CITY - RED HILLS WIND 138KV CKT 1'
12WP	00NR	2	'FROM->TO'	G11_049	'ELK CITY 230KV (ELKCTY-6) 230/138/13.8KV TRANSFORMER CKT 1'	287	0.038	103.92	'MOREWOOD SW - RED HILLS WIND 138KV CKT 1'
12WP	00NR	2	'FROM->TO'	G11_049	'ELK CITY 230KV (ELKCTY-6) 230/138/13.8KV TRANSFORMER CKT 1'	287	0.038	103.82	'ELK CITY - RED HILLS WIND 138KV CKT 1'
12WP	00NR	2	'FROM->TO'	G11_049	'ELK CITY 230KV (ELKCTY-6) 230/138/13.8KV TRANSFORMER CKT 1'	287	0.038	103.32	'MOREWOOD SW - RED HILLS WIND 138KV CKT 1'
13WP	00NR	2	'FROM->TO'	G11_049	'ELK CITY 230KV (ELKCTY-6) 230/138/13.8KV TRANSFORMER CKT 1'	287	0.038	101.84	'LAKE PAULINE - RUSSELL 138KV CKT 1'
13WP	00NR	2	'FROM->TO'	G11_049	'ELK CITY 230KV (ELKCTY-6) 230/138/13.8KV TRANSFORMER CKT 1'	287	0.038	101.40	'LAKE PAULINE - RUSSELL 138KV CKT 1'
12WP	00NR	2	'FROM->TO'	G11_049	'ELK CITY 230KV (ELKCTY-6) 230/138/13.8KV TRANSFORMER CKT 1'	287	0.038	102.97	'LAKE PAULINE - RUSSELL 138KV CKT 1'
12WP	00NR	2	'FROM->TO'	G11_049	'ELK CITY 230KV (ELKCTY-6) 230/138/13.8KV TRANSFORMER CKT 1'	287	0.038	102.51	'LAKE PAULINE - RUSSELL 138KV CKT 1'
13WP	00NR	2	'FROM->TO'	G11_049	'ELK CITY 230KV (ELKCTY-6) 230/138/13.8KV TRANSFORMER CKT 1'	287	0.038	103.75	'BEAVER CO 345.00 - WOODWARD DISTRICT EHV 345KV CKT 1'
13WP	00NR	2	'FROM->TO'	G11_049	'ELK CITY 230KV (ELKCTY-6) 230/138/13.8KV TRANSFORMER CKT 1'	287	0.038	103.19	'BEAVER CO 345.00 - WOODWARD DISTRICT EHV 345KV CKT 1'
12WP	00NR	2	'FROM->TO'	G11_049	'ELK CITY 230KV (ELKCTY-6) 230/138/13.8KV TRANSFORMER CKT 1'	287	0.038	105.02	'BEAVER CO 345.00 - WOODWARD DISTRICT EHV 345KV CKT 1'
12WP	00NR	2	'FROM->TO'	G11_049	'ELK CITY 230KV (ELKCTY-6) 230/138/13.8KV TRANSFORMER CKT 1'	287	0.038	104.40	'BEAVER CO 345.00 - WOODWARD DISTRICT EHV 345KV CKT 1'
13WP	00NR	2	'FROM->TO'	G11_049	'ELK CITY 230KV (ELKCTY-6) 230/138/13.8KV TRANSFORMER CKT 1'	287	0.038	100.93	'DBL-MATT-CIM'
13WP	00NR	2	'FROM->TO'	G11_049	'ELK CITY 230KV (ELKCTY-6) 230/138/13.8KV TRANSFORMER CKT 1'	287	0.038	100.53	'DBL-MATT-CIM'

SEASON	GROUP	SCENARIO	DIRECTION	SOURCE	MONITORED ELEMENT	RATE B (MVA)	TDF	(%MVA) LOADING	CONTINGENCY
13WP	00NR	2	'FROM->TO'	G11_049	'ELK CITY 230KV (ELKCTY-6) 230/138/13.8KV TRANSFORMER CKT 1'	287	0.038	100.36	'ALTUS JUNCTION - RUSSELL 138KV CKT 1'
13WP	00NR	2	'FROM->TO'	G11_049	'ELK CITY 230KV (ELKCTY-6) 230/138/13.8KV TRANSFORMER CKT 1'	287	0.038	100.00	'ALTUS JUNCTION - RUSSELL 138KV CKT 1'
12WP	00NR	2	'FROM->TO'	G11_049	'ELK CITY 230KV (ELKCTY-6) 230/138/13.8KV TRANSFORMER CKT 1'	287	0.038	101.50	'ALTUS JUNCTION - RUSSELL 138KV CKT 1'
12WP	00NR	2	'FROM->TO'	G11_049	'ELK CITY 230KV (ELKCTY-6) 230/138/13.8KV TRANSFORMER CKT 1'	287	0.038	101.05	'ALTUS JUNCTION - RUSSELL 138KV CKT 1'
13WP	00NR	2	'FROM->TO'	G11_049	'ELK CITY 230KV (ELKCTY-6) 230/138/13.8KV TRANSFORMER CKT 1'	287	0.038	100.30	'DBL-THIS-WWR'
13WP	00NR	2	'FROM->TO'	G11_049	'ELK CITY 230KV (ELKCTY-6) 230/138/13.8KV TRANSFORMER CKT 1'	287	0.038	100.32	'MINGO - RED WILLOW 345KV CKT 1'
13WP	00NR	2	'FROM->TO'	G11_049	'ELK CITY 230KV (ELKCTY-6) 230/138/13.8KV TRANSFORMER CKT 1'	287	0.038	100.40	'MINGO - SETAB 345KV CKT 1'
13WP	00NR	2	'FROM->TO'	G11_049	'ELK CITY 230KV (ELKCTY-6) 230/138/13.8KV TRANSFORMER CKT 1'	287	0.038	100.00	'MINGO - SETAB 345KV CKT 1'
12WP	00NR	2	'FROM->TO'	G11_049	'ELK CITY 230KV (ELKCTY-6) 230/138/13.8KV TRANSFORMER CKT 1'	287	0.038	101.55	'MINGO - RED WILLOW 345KV CKT 1'
12WP	00NR	2	'FROM->TO'	G11_049	'ELK CITY 230KV (ELKCTY-6) 230/138/13.8KV TRANSFORMER CKT 1'	287	0.038	101.11	'MINGO - RED WILLOW 345KV CKT 1'
12WP	00NR	2	'FROM->TO'	G11_049	'ELK CITY 230KV (ELKCTY-6) 230/138/13.8KV TRANSFORMER CKT 1'	287	0.038	101.64	'MINGO - SETAB 345KV CKT 1'
12WP	00NR	2	'FROM->TO'	G11_049	'ELK CITY 230KV (ELKCTY-6) 230/138/13.8KV TRANSFORMER CKT 1'	287	0.038	101.20	'MINGO - SETAB 345KV CKT 1'
13WP	00NR	2	'FROM->TO'	G11_049	'ELK CITY 230KV (ELKCTY-6) 230/138/13.8KV TRANSFORMER CKT 1'	287	0.038	101.78	'DBL-MULG-CIR'
13WP	00NR	2	'FROM->TO'	G11_049	'ELK CITY 230KV (ELKCTY-6) 230/138/13.8KV TRANSFORMER CKT 1'	287	0.038	101.78	'DBL-SPRVL-MU'
13WP	00NR	2	'FROM->TO'	G11_049	'ELK CITY 230KV (ELKCTY-6) 230/138/13.8KV TRANSFORMER CKT 1'	287	0.038	101.33	'DBL-MULG-CIR'
13WP	00NR	2	'FROM->TO'	G11_049	'ELK CITY 230KV (ELKCTY-6) 230/138/13.8KV TRANSFORMER CKT 1'	287	0.038	101.33	'DBL-SPRVL-MU'
13WP	00NR	2	'FROM->TO'	G11_049	'ELK CITY 230KV (ELKCTY-6) 230/138/13.8KV TRANSFORMER CKT 1'	287	0.038	100.00	'HOLCOMB - SETAB 345KV CKT 1'
13WP	00NR	2	'TO->FROM'	G11_049	'DOVER SW - OKEENE 138KV CKT 1'	143	0.038	139.58	'DBL-MATT-TAT'
12WP	00NR	2	'FROM->TO'	G11_049	'ELK CITY 230KV (ELKCTY-6) 230/138/13.8KV TRANSFORMER CKT 1'	287	0.038	101.23	'HOLCOMB - SETAB 345KV CKT 1'
12WP	00NR	2	'FROM->TO'	G11_049	'ELK CITY 230KV (ELKCTY-6) 230/138/13.8KV TRANSFORMER CKT 1'	287	0.038	100.79	'HOLCOMB - SETAB 345KV CKT 1'
13WP	00NR	2	'FROM->TO'	G11_049	'ELK CITY 230KV (ELKCTY-6) 230/138/13.8KV TRANSFORMER CKT 1'	287	0.038	100.63	'HEDLEY - NORTH MEMPHIS REC 69KV CKT 1'
13WP	00NR	2	'FROM->TO'	G11_049	'ELK CITY 230KV (ELKCTY-6) 230/138/13.8KV TRANSFORMER CKT 1'	287	0.038	100.61	'SPP-AEPW-25'
13WP	00NR	2	'FROM->TO'	G11_049	'ELK CITY 230KV (ELKCTY-6) 230/138/13.8KV TRANSFORMER CKT 1'	287	0.038	100.53	'MEMPHIS - NW MEMPHIS 69KV CKT 1'
13WP	00NR	2	'FROM->TO'	G11_049	'ELK CITY 230KV (ELKCTY-6) 230/138/13.8KV TRANSFORMER CKT 1'	287	0.038	100.53	'NORTH MEMPHIS REC - NW MEMPHIS 69KV CKT 1'
13WP	00NR	2	'FROM->TO'	G11_049	'ELK CITY 230KV (ELKCTY-6) 230/138/13.8KV TRANSFORMER CKT 1'	287	0.038	100.21	'HEDLEY - NORTH MEMPHIS REC 69KV CKT 1'
13WP	00NR	2	'FROM->TO'	G11_049	'ELK CITY 230KV (ELKCTY-6) 230/138/13.8KV TRANSFORMER CKT 1'	287	0.038	100.19	'SPP-AEPW-25'
13WP	00NR	2	'FROM->TO'	G11_049	'ELK CITY 230KV (ELKCTY-6) 230/138/13.8KV TRANSFORMER CKT 1'	287	0.038	100.11	'MEMPHIS - NW MEMPHIS 69KV CKT 1'
13WP	00NR	2	'FROM->TO'	G11_049	'ELK CITY 230KV (ELKCTY-6) 230/138/13.8KV TRANSFORMER CKT 1'	287	0.038	100.11	'NORTH MEMPHIS REC - NW MEMPHIS 69KV CKT 1'
12WP	00NR	2	'FROM->TO'	G11_049	'ELK CITY 230KV (ELKCTY-6) 230/138/13.8KV TRANSFORMER CKT 1'	287	0.037	101.82	'HEDLEY - NORTH MEMPHIS REC 69KV CKT 1'
12WP	00NR	2	'FROM->TO'	G11_049	'ELK CITY 230KV (ELKCTY-6) 230/138/13.8KV TRANSFORMER CKT 1'	287	0.037	101.72	'MEMPHIS - NW MEMPHIS 69KV CKT 1'
12WP	00NR	2	'FROM->TO'	G11_049	'ELK CITY 230KV (ELKCTY-6) 230/138/13.8KV TRANSFORMER CKT 1'	287	0.037	101.72	'NORTH MEMPHIS REC - NW MEMPHIS 69KV CKT 1'
12WP	00NR	2	'FROM->TO'	G11_049	'ELK CITY 230KV (ELKCTY-6) 230/138/13.8KV TRANSFORMER CKT 1'	287	0.037	101.36	'HEDLEY - NORTH MEMPHIS REC 69KV CKT 1'
12WP	00NR	2	'FROM->TO'	G11_049	'ELK CITY 230KV (ELKCTY-6) 230/138/13.8KV TRANSFORMER CKT 1'	287	0.037	101.26	'MEMPHIS - NW MEMPHIS 69KV CKT 1'
12WP	00NR	2	'FROM->TO'	G11_049	'ELK CITY 230KV (ELKCTY-6) 230/138/13.8KV TRANSFORMER CKT 1'	287	0.037	101.26	'NORTH MEMPHIS REC - NW MEMPHIS 69KV CKT 1'
13WP	00NR	2	'FROM->TO'	G11_049	'ELK CITY 230KV (ELKCTY-6) 230/138/13.8KV TRANSFORMER CKT 1'	287	0.037	100.10	'THISTLE 7 345.00 - WICHITA 345KV CKT 1'
13WP	00NR	2	'FROM->TO'	G11_049	'ELK CITY 230KV (ELKCTY-6) 230/138/13.8KV TRANSFORMER CKT 1'	287	0.037	100.10	'THISTLE 7 345.00 - WICHITA 345KV CKT 2'
12SP	00NR	2	'TO->FROM'	G11_049	'DOVER SW - OKEENE 138KV CKT 1'	130	0.037	123.04	'DBL-MATT-TAT'
12WP	00NR	2	'FROM->TO'	G11_049	'ELK CITY 230KV (ELKCTY-6) 230/138/13.8KV TRANSFORMER CKT 1'	287	0.037	101.36	'THISTLE 7 345.00 - WICHITA 345KV CKT 1'
12WP	00NR	2	'FROM->TO'	G11_049	'ELK CITY 230KV (ELKCTY-6) 230/138/13.8KV TRANSFORMER CKT 1'	287	0.037	101.36	'THISTLE 7 345.00 - WICHITA 345KV CKT 2'
12WP	00NR	2	'FROM->TO'	G11_049	'ELK CITY 230KV (ELKCTY-6) 230/138/13.8KV TRANSFORMER CKT 1'	287	0.037	100.94	'THISTLE 7 345.00 - WICHITA 345KV CKT 1'
12WP	00NR	2	'FROM->TO'	G11_049	'ELK CITY 230KV (ELKCTY-6) 230/138/13.8KV TRANSFORMER CKT 1'	287	0.037	100.94	'THISTLE 7 345.00 - WICHITA 345KV CKT 2'
13SP	00NR	2	'TO->FROM'	G11_049	'DOVER SW - OKEENE 138KV CKT 1'	130	0.037	123.36	'DBL-MATT-TAT'
12WP	00NR	2	'FROM->TO'	G11_049	'ELK CITY 230KV (ELKCTY-6) 230/138/13.8KV TRANSFORMER CKT 1'	287	0.037	105.76	'GRAPEVINE INTERCHANGE - KIRBY SWITCHING STATION 115KV CKT 1'
12WP	00NR	2	'FROM->TO'	G11_049	'ELK CITY 230KV (ELKCTY-6) 230/138/13.8KV TRANSFORMER CKT 1'	287	0.037	105.19	'GRAPEVINE INTERCHANGE - KIRBY SWITCHING STATION 115KV CKT 1'
12SP	00NR	2	'TO->FROM'	G11_049	'CEDARDALE - MOORELAND 138KV CKT 1'	179	0.037	108.17	'DBL-MATT-TAT'
12SP	00NR	2	'FROM->TO'	G11_049	'CEDARDALE - OKEENE 138KV CKT 1'	179	0.037	106.57	'DBL-MATT-TAT'
13WP	00NR	2	'FROM->TO'	G11_049	'ELK CITY 230KV (ELKCTY-6) 230/138/13.8KV TRANSFORMER CKT 1'	287	0.037	100.00	'G11-17T 345.00 - POST ROCK 345KV CKT 1'
12WP	00NR	2	'FROM->TO'	G11_049	'ELK CITY 230KV (ELKCTY-6) 230/138/13.8KV TRANSFORMER CKT 1'	287	0.037	101.19	'G11-17T 345.00 - POST ROCK 345KV CKT 1'
12WP	00NR	2	'FROM->TO'	G11_049	'ELK CITY 230KV (ELKCTY-6) 230/138/13.8KV TRANSFORMER CKT 1'	287	0.037	100.77	'G11-17T 345.00 - POST ROCK 345KV CKT 1'
13WP	00NR	2	'FROM->TO'	G11_049	'ELK CITY 230KV (ELKCTY-6) 230/138/13.8KV TRANSFORMER CKT 1'	287	0.037	100.50	'DBL-THIS-CLR'
13WP	00NR	2	'FROM->TO'	G11_049	'ELK CITY 230KV (ELKCTY-6) 230/138/13.8KV TRANSFORMER CKT 1'	287	0.037	100.07	'DBL-THIS-CLR'
13WP	00NR	2	'FROM->TO'	G11_049	'ELK CITY 230KV (ELKCTY-6) 230/138/13.8KV TRANSFORMER CKT 1'	287	0.037	105.88	'GEN336821 1-GRAND GULF UNIT'
13WP	00NR	2	'FROM->TO'	G11_049	'ELK CITY 230KV (ELKCTY-6) 230/138/13.8KV TRANSFORMER CKT 1'	287	0.037	105.44	'GEN336153 1-WATERFORD UNIT#3'
13WP	00NR	2	'FROM->TO'	G11_049	'ELK CITY 230KV (ELKCTY-6) 230/138/13.8KV TRANSFORMER CKT 1'	287	0.037	105.36	'GEN336821 1-GRAND GULF UNIT'
13WP	00NR	2	'FROM->TO'	G11_049	'ELK CITY 230KV (ELKCTY-6) 230/138/13.8KV TRANSFORMER CKT 1'	287	0.037	104.92	'GEN336153 1-WATERFORD UNIT#3'
13WP	00NR	2	'FROM->TO'	G11_049	'ELK CITY 230KV (ELKCTY-6) 230/138/13.8KV TRANSFORMER CKT 1'	287	0.037	104.59	'GEN337911 1-ARKANSAS NUCLEAR ONE UNIT #2'
13WP	00NR	2	'FROM->TO'	G11_049	'ELK CITY 230KV (ELKCTY-6) 230/138/13.8KV TRANSFORMER CKT 1'	287	0.037	104.54	'GEN335831 1-RIVERBEND UNIT#1'
13WP	00NR	2	'FROM->TO'	G11_049	'ELK CITY 230KV (ELKCTY-6) 230/138/13.8KV TRANSFORMER CKT 1'	287	0.037	104.09	'GEN337911 1-ARKANSAS NUCLEAR ONE UNIT #2'
13WP	00NR	2	'FROM->TO'	G11_049	'ELK CITY 230KV (ELKCTY-6) 230/138/13.8KV TRANSFORMER CKT 1'	287	0.037	104.04	'GEN335831 1-RIVERBEND UNIT#1'
13WP	00NR	2	'FROM->TO'	G11_049	'ELK CITY 230KV (ELKCTY-6) 230/138/13.8KV TRANSFORMER CKT 1'	287	0.037	103.60	'GEN337910 1-ARKANSAS NUCLEAR ONE UNIT #1'
13WP	00NR	2	'FROM->TO'	G11_049	'ELK CITY 230KV (ELKCTY-6) 230/138/13.8KV TRANSFORMER CKT 1'	287	0.037	103.28	'GEN532751 1-WOLF CREEK GENERATING STATION UNIT 1'
13WP	00NR	2	'FROM->TO'	G11_049	'ELK CITY 230KV (ELKCTY-6) 230/138/13.8KV TRANSFORMER CKT 1'	287	0.037	103.20	'GEN337652 1-WHITE BLUFF UNIT #1'
13WP	00NR	2	'FROM->TO'	G11_049	'ELK CITY 230KV (ELKCTY-6) 230/138/13.8KV TRANSFORMER CKT 1'	287	0.037	103.20	'GEN337910 1-ARKANSAS NUCLEAR ONE UNIT #1'
13WP	00NR	2	'FROM->TO'	G11_049	'ELK CITY 230KV (ELKCTY-6) 230/138/13.8KV TRANSFORMER CKT 1'	287	0.037	103.13	'GEN338146 1-INDEPENDENCE UNIT #2'
13WP	00NR	2	'FROM->TO'	G11_049	'ELK CITY 230KV (ELKCTY-6) 230/138/13.8KV TRANSFORMER CKT 1'	287	0.037	103.10	'GEN338143 1-INDEPENDENCE UNIT #1'
13WP	00NR	2	'FROM->TO'	G11_049	'ELK CITY 230KV (ELKCTY-6) 230/138/13.8KV TRANSFORMER CKT 1'	287	0.037	102.90	'GEN337653 1-WHITE BLUFF UNIT #2'
13WP	00NR	2	'FROM->TO'	G11_049	'ELK CITY 230KV (ELKCTY-6) 230/138/13.8KV TRANSFORMER CKT 1'	287	0.037	102.81	'GEN532751 1-WOLF CREEK GENERATING STATION UNIT 1'
13WP	00NR	2	'FROM->TO'	G11_049	'ELK CITY 230KV (ELKCTY-6) 230/138/13.8KV TRANSFORMER CKT 1'	287	0.037	102.79	'GEN501801 1-DOLET HILLS UNIT1'
13WP	00NR	2	'FROM->TO'	G11_049	'ELK CITY 230KV (ELKCTY-6) 230/138/13.8KV TRANSFORMER CKT 1'	287	0.037	102.70	'GEN337652 1-WHITE BLUFF UNIT #1'
13WP	00NR	2	'FROM->TO'	G11_049	'ELK CITY 230KV (ELKCTY-6) 230/138/13.8KV TRANSFORMER CKT 1'	287	0.037	102.69	'GEN337041 1-GERALD ANDRUS'
13WP	00NR	2	'FROM->TO'	G11_049	'ELK CITY 230KV (ELKCTY-6) 230/138/13.8KV TRANSFORMER CKT 1'	287	0.037	102.67	'GEN338146 1-INDEPENDENCE UNIT #2'
13WP	00NR	2	'FROM->TO'	G11_049	'ELK CITY 230KV (ELKCTY-6) 230/138/13.8KV TRANSFORMER CKT 1'	287	0.037	102.60	'GEN336251 1-NINEMILE POINT UNIT#4'
13WP	00NR	2	'FROM->TO'	G11_049	'ELK CITY 230KV (ELKCTY-6) 230/138/13.8KV TRANSFORMER CKT 1'	287	0.037	102.60	'GEN338143 1-INDEPENDENCE UNIT #1'
13WP	00NR	2	'FROM->TO'	G11_049	'ELK CITY 230KV (ELKCTY-6) 230/138/13.8KV TRANSFORMER CKT 1'	287	0.037	102.40	'GEN337653 1-WHITE BLUFF UNIT #2'
13WP	00NR	2	'FROM->TO'	G11_049	'ELK CITY 230KV (ELKCTY-6) 230/138/13.8KV TRANSFORMER CKT 1'	287	0.037	102.34	'GEN501801 1-DOLET HILLS UNIT1'
13WP	00NR	2	'FROM->TO'	G11_049	'ELK CITY 230KV (ELKCTY-6) 230/138/13.8KV TRANSFORMER CKT 1'	287	0.037	102.27	'GEN338388 1-1PLUMPT 23.000'
13WP	00NR	2	'FROM->TO'	G11_049	'ELK CITY 230KV (ELKCTY-6) 230/138/13.8KV TRANSFORMER CKT 1'	287	0.037	102.24	'GEN337041 1-GERALD ANDRUS'
13WP	00NR	2	'FROM->TO'	G11_049	'ELK CITY 230KV (ELKCTY-6) 230/138/13.8KV TRANSFORMER CKT 1'	287	0.037	102.21	'GEN501813 1-RODEMACHER UNIT 3'

SEASON	GROUP	SCENARIO	DIRECTION	SOURCE	MONITORED ELEMENT	RATE B (MVA)	TDF	(%MVA) LOADING	CONTINGENCY
13WP	00NR	2	'FROM->TO'	G11_049	'ELK CITY 230KV (ELKCTY-6) 230/138/13.8KV TRANSFORMER CKT 1'	287	0.037	102.20	'GEN336251 1-NINEMILE POINT UNIT#4'
13WP	00NR	2	'FROM->TO'	G11_049	'ELK CITY 230KV (ELKCTY-6) 230/138/13.8KV TRANSFORMER CKT 1'	287	0.037	101.99	'GEN520947 1-HUGO1'
13WP	00NR	2	'FROM->TO'	G11_049	'ELK CITY 230KV (ELKCTY-6) 230/138/13.8KV TRANSFORMER CKT 1'	287	0.037	101.91	'GEN336831 1-BAXTER WILSON SES'
13WP	00NR	2	'FROM->TO'	G11_049	'ELK CITY 230KV (ELKCTY-6) 230/138/13.8KV TRANSFORMER CKT 1'	287	0.037	101.82	'GEN338388 1-1PLUMPT 23.000'
13WP	00NR	2	'FROM->TO'	G11_049	'ELK CITY 230KV (ELKCTY-6) 230/138/13.8KV TRANSFORMER CKT 1'	287	0.037	101.80	'GEN334440 1-SABINE UNIT 4'
13WP	00NR	2	'FROM->TO'	G11_049	'ELK CITY 230KV (ELKCTY-6) 230/138/13.8KV TRANSFORMER CKT 1'	287	0.037	101.80	'GEN509403 1-PIRKEY GENERATION'
13WP	00NR	2	'FROM->TO'	G11_049	'ELK CITY 230KV (ELKCTY-6) 230/138/13.8KV TRANSFORMER CKT 1'	287	0.037	101.78	'GEN501812 1-RODEMACHER UNIT 2'
13WP	00NR	2	'FROM->TO'	G11_049	'ELK CITY 230KV (ELKCTY-6) 230/138/13.8KV TRANSFORMER CKT 1'	287	0.037	101.77	'GEN501813 1-RODEMACHER UNIT 3'
13WP	00NR	2	'FROM->TO'	G11_049	'ELK CITY 230KV (ELKCTY-6) 230/138/13.8KV TRANSFORMER CKT 1'	287	0.037	101.75	'GEN335206 1-NELSON UNIT 6'
13WP	00NR	2	'FROM->TO'	G11_049	'ELK CITY 230KV (ELKCTY-6) 230/138/13.8KV TRANSFORMER CKT 1'	287	0.037	101.60	'GEN509416 1-TURK GENERATION'
13WP	00NR	2	'FROM->TO'	G11_049	'ELK CITY 230KV (ELKCTY-6) 230/138/13.8KV TRANSFORMER CKT 1'	287	0.037	101.56	'GEN520947 1-HUGO1'
13WP	00NR	2	'FROM->TO'	G11_049	'ELK CITY 230KV (ELKCTY-6) 230/138/13.8KV TRANSFORMER CKT 1'	287	0.037	101.48	'GEN336831 1-BAXTER WILSON SES'
13WP	00NR	2	'FROM->TO'	G11_049	'ELK CITY 230KV (ELKCTY-6) 230/138/13.8KV TRANSFORMER CKT 1'	287	0.037	101.46	'GEN334441 1-SABINE UNIT 5'
13WP	00NR	2	'FROM->TO'	G11_049	'ELK CITY 230KV (ELKCTY-6) 230/138/13.8KV TRANSFORMER CKT 1'	287	0.037	101.37	'GEN334440 1-SABINE UNIT 4'
13WP	00NR	2	'FROM->TO'	G11_049	'ELK CITY 230KV (ELKCTY-6) 230/138/13.8KV TRANSFORMER CKT 1'	287	0.037	101.35	'GEN501812 1-RODEMACHER UNIT 2'
13WP	00NR	2	'FROM->TO'	G11_049	'ELK CITY 230KV (ELKCTY-6) 230/138/13.8KV TRANSFORMER CKT 1'	287	0.037	101.32	'GEN335206 1-NELSON UNIT 6'
13WP	00NR	2	'FROM->TO'	G11_049	'ELK CITY 230KV (ELKCTY-6) 230/138/13.8KV TRANSFORMER CKT 1'	287	0.037	101.32	'GEN640009 1-COOPER NUCLEAR STATION'
13WP	00NR	2	'FROM->TO'	G11_049	'ELK CITY 230KV (ELKCTY-6) 230/138/13.8KV TRANSFORMER CKT 1'	287	0.037	101.30	'GEN509403 1-PIRKEY GENERATION'
13WP	00NR	2	'FROM->TO'	G11_049	'ELK CITY 230KV (ELKCTY-6) 230/138/13.8KV TRANSFORMER CKT 1'	287	0.037	101.20	'GEN509416 1-TURK GENERATION'
13WP	00NR	2	'FROM->TO'	G11_049	'ELK CITY 230KV (ELKCTY-6) 230/138/13.8KV TRANSFORMER CKT 1'	287	0.037	101.16	'GEN509404 1-WELSH #1'
13WP	00NR	2	'FROM->TO'	G11_049	'ELK CITY 230KV (ELKCTY-6) 230/138/13.8KV TRANSFORMER CKT 1'	287	0.037	101.16	'GEN509405 1-WELSH #2'
13WP	00NR	2	'FROM->TO'	G11_049	'ELK CITY 230KV (ELKCTY-6) 230/138/13.8KV TRANSFORMER CKT 1'	287	0.037	101.16	'GEN509406 1-WELSH #3'
13WP	00NR	2	'FROM->TO'	G11_049	'ELK CITY 230KV (ELKCTY-6) 230/138/13.8KV TRANSFORMER CKT 1'	287	0.037	101.04	'GEN334441 1-SABINE UNIT 5'
13WP	00NR	2	'FROM->TO'	G11_049	'ELK CITY 230KV (ELKCTY-6) 230/138/13.8KV TRANSFORMER CKT 1'	287	0.037	101.01	'GEN515226 1-MUSKOGEE 6G'
13WP	00NR	2	'FROM->TO'	G11_049	'ELK CITY 230KV (ELKCTY-6) 230/138/13.8KV TRANSFORMER CKT 1'	287	0.037	100.92	'GEN560225 1-G10-43 18.000'
13WP	00NR	2	'FROM->TO'	G11_049	'ELK CITY 230KV (ELKCTY-6) 230/138/13.8KV TRANSFORMER CKT 1'	287	0.037	100.91	'GEN514806 1-SOONER UNIT 2'
13WP	00NR	2	'FROM->TO'	G11_049	'ELK CITY 230KV (ELKCTY-6) 230/138/13.8KV TRANSFORMER CKT 1'	287	0.037	100.90	'GEN640009 1-COOPER NUCLEAR STATION'
13WP	00NR	2	'FROM->TO'	G11_049	'ELK CITY 230KV (ELKCTY-6) 230/138/13.8KV TRANSFORMER CKT 1'	287	0.037	100.90	'GEN514805 1-SOONER UNIT 1'
13WP	00NR	2	'FROM->TO'	G11_049	'ELK CITY 230KV (ELKCTY-6) 230/138/13.8KV TRANSFORMER CKT 1'	287	0.037	100.89	'GEN560323 1-G10-40 0.6900'
13WP	00NR	2	'FROM->TO'	G11_049	'ELK CITY 230KV (ELKCTY-6) 230/138/13.8KV TRANSFORMER CKT 1'	287	0.037	100.87	'GEN562100 1-G11_054_3 0.6900'
13WP	00NR	2	'FROM->TO'	G11_049	'ELK CITY 230KV (ELKCTY-6) 230/138/13.8KV TRANSFORMER CKT 1'	287	0.037	100.82	'GEN512688 2-GRDA1 GSU2 22'
13WP	00NR	2	'FROM->TO'	G11_049	'ELK CITY 230KV (ELKCTY-6) 230/138/13.8KV TRANSFORMER CKT 1'	287	0.037	100.75	'GEN300006 1-NEW MADRID UNIT 1'
13WP	00NR	2	'FROM->TO'	G11_049	'ELK CITY 230KV (ELKCTY-6) 230/138/13.8KV TRANSFORMER CKT 1'	287	0.037	100.75	'GEN300007 1-NEW MADRID UNIT 2'
13WP	00NR	2	'FROM->TO'	G11_049	'ELK CITY 230KV (ELKCTY-6) 230/138/13.8KV TRANSFORMER CKT 1'	287	0.037	100.75	'GEN509406 1-WELSH #3'
13WP	00NR	2	'FROM->TO'	G11_049	'ELK CITY 230KV (ELKCTY-6) 230/138/13.8KV TRANSFORMER CKT 1'	287	0.037	100.75	'GEN509404 1-WELSH #1'
13WP	00NR	2	'FROM->TO'	G11_049	'ELK CITY 230KV (ELKCTY-6) 230/138/13.8KV TRANSFORMER CKT 1'	287	0.037	100.75	'GEN509405 1-WELSH #2'
13WP	00NR	2	'FROM->TO'	G11_049	'ELK CITY 230KV (ELKCTY-6) 230/138/13.8KV TRANSFORMER CKT 1'	287	0.037	100.74	'GEN509394 1-FLINT CREEK'
13WP	00NR	2	'FROM->TO'	G11_049	'ELK CITY 230KV (ELKCTY-6) 230/138/13.8KV TRANSFORMER CKT 1'	287	0.037	100.72	'GEN300003 1-THOMAS HILL UNIT 3'
13WP	00NR	2	'FROM->TO'	G11_049	'ELK CITY 230KV (ELKCTY-6) 230/138/13.8KV TRANSFORMER CKT 1'	287	0.037	100.72	'GEN515223 1-MUSKOGEE 4G'
13WP	00NR	2	'FROM->TO'	G11_049	'ELK CITY 230KV (ELKCTY-6) 230/138/13.8KV TRANSFORMER CKT 1'	287	0.037	100.69	'GEN515225 1-MUSKOGEE 5G'
13WP	00NR	2	'FROM->TO'	G11_049	'ELK CITY 230KV (ELKCTY-6) 230/138/13.8KV TRANSFORMER CKT 1'	287	0.037	100.60	'GEN515226 1-MUSKOGEE 6G'
13WP	00NR	2	'FROM->TO'	G11_049	'ELK CITY 230KV (ELKCTY-6) 230/138/13.8KV TRANSFORMER CKT 1'	287	0.037	100.57	'GEN511839 1-NORTHEASTERN STATION #2'
13WP	00NR	2	'FROM->TO'	G11_049	'ELK CITY 230KV (ELKCTY-6) 230/138/13.8KV TRANSFORMER CKT 1'	287	0.037	100.52	'GEN511840 1-NORTHEASTERN STATION #3'
13WP	00NR	2	'FROM->TO'	G11_049	'ELK CITY 230KV (ELKCTY-6) 230/138/13.8KV TRANSFORMER CKT 1'	287	0.037	100.50	'GEN514806 1-SOONER UNIT 2'
13WP	00NR	2	'FROM->TO'	G11_049	'ELK CITY 230KV (ELKCTY-6) 230/138/13.8KV TRANSFORMER CKT 1'	287	0.037	100.49	'GEN511841 1-NORTHEASTERN STATION #4'
13WP	00NR	2	'FROM->TO'	G11_049	'ELK CITY 230KV (ELKCTY-6) 230/138/13.8KV TRANSFORMER CKT 1'	287	0.037	100.48	'GEN514805 1-SOONER UNIT 1'
13WP	00NR	2	'FROM->TO'	G11_049	'ELK CITY 230KV (ELKCTY-6) 230/138/13.8KV TRANSFORMER CKT 1'	287	0.037	100.48	'GEN560323 1-G10-40 0.6900'
13WP	00NR	2	'FROM->TO'	G11_049	'ELK CITY 230KV (ELKCTY-6) 230/138/13.8KV TRANSFORMER CKT 1'	287	0.037	100.48	'GEN512689 1-GRDA1 GSU1 22'
13WP	00NR	2	'FROM->TO'	G11_049	'ELK CITY 230KV (ELKCTY-6) 230/138/13.8KV TRANSFORMER CKT 1'	287	0.037	100.46	'GEN336170 1-GULF OXY U4'
13WP	00NR	2	'FROM->TO'	G11_049	'ELK CITY 230KV (ELKCTY-6) 230/138/13.8KV TRANSFORMER CKT 1'	287	0.037	100.46	'GEN562100 1-G11_054_3 0.6900'
13WP	00NR	2	'FROM->TO'	G11_049	'ELK CITY 230KV (ELKCTY-6) 230/138/13.8KV TRANSFORMER CKT 1'	287	0.037	100.44	'GEN542962 2-IATAN UNIT #2'
13WP	00NR	2	'FROM->TO'	G11_049	'ELK CITY 230KV (ELKCTY-6) 230/138/13.8KV TRANSFORMER CKT 1'	287	0.037	100.42	'GEN560225 1-G10-43 18.000'
13WP	00NR	2	'FROM->TO'	G11_049	'ELK CITY 230KV (ELKCTY-6) 230/138/13.8KV TRANSFORMER CKT 1'	287	0.037	100.42	'GEN512688 2-GRDA1 GSU2 22'
13WP	00NR	2	'FROM->TO'	G11_049	'ELK CITY 230KV (ELKCTY-6) 230/138/13.8KV TRANSFORMER CKT 1'	287	0.037	100.41	'GEN542955 1-LACYGNE UNIT #1'
13WP	00NR	2	'FROM->TO'	G11_049	'ELK CITY 230KV (ELKCTY-6) 230/138/13.8KV TRANSFORMER CKT 1'	287	0.037	100.37	'GEN560687 1-G11-007 0.5750'
13WP	00NR	2	'FROM->TO'	G11_049	'ELK CITY 230KV (ELKCTY-6) 230/138/13.8KV TRANSFORMER CKT 1'	287	0.037	100.35	'GEN300006 1-NEW MADRID UNIT 1'
13WP	00NR	2	'FROM->TO'	G11_049	'ELK CITY 230KV (ELKCTY-6) 230/138/13.8KV TRANSFORMER CKT 1'	287	0.037	100.35	'GEN300007 1-NEW MADRID UNIT 2'
13WP	00NR	2	'FROM->TO'	G11_049	'ELK CITY 230KV (ELKCTY-6) 230/138/13.8KV TRANSFORMER CKT 1'	287	0.037	100.34	'GEN542956 2-LACYGNE UNIT #2'
13WP	00NR	2	'FROM->TO'	G11_049	'ELK CITY 230KV (ELKCTY-6) 230/138/13.8KV TRANSFORMER CKT 1'	287	0.037	100.34	'GEN509394 1-FLINT CREEK'
13WP	00NR	2	'FROM->TO'	G11_049	'ELK CITY 230KV (ELKCTY-6) 230/138/13.8KV TRANSFORMER CKT 1'	287	0.037	100.33	'GEN511843 1-RIVERSIDE STATION #2'
13WP	00NR	2	'FROM->TO'	G11_049	'ELK CITY 230KV (ELKCTY-6) 230/138/13.8KV TRANSFORMER CKT 1'	287	0.037	100.32	'GEN300003 1-THOMAS HILL UNIT 3'
13WP	00NR	2	'FROM->TO'	G11_049	'ELK CITY 230KV (ELKCTY-6) 230/138/13.8KV TRANSFORMER CKT 1'	287	0.037	100.32	'GEN515223 1-MUSKOGEE 4G'
13WP	00NR	2	'FROM->TO'	G11_049	'ELK CITY 230KV (ELKCTY-6) 230/138/13.8KV TRANSFORMER CKT 1'	287	0.037	100.29	'GEN645012 2-NEBRASKA CITY 2'
13WP	00NR	2	'FROM->TO'	G11_049	'ELK CITY 230KV (ELKCTY-6) 230/138/13.8KV TRANSFORMER CKT 1'	287	0.037	100.29	'GEN515225 1-MUSKOGEE 5G'
13WP	00NR	2	'FROM->TO'	G11_049	'ELK CITY 230KV (ELKCTY-6) 230/138/13.8KV TRANSFORMER CKT 1'	287	0.037	100.28	'GEN515040 1-SEMINOLE 1G'
13WP	00NR	2	'FROM->TO'	G11_049	'ELK CITY 230KV (ELKCTY-6) 230/138/13.8KV TRANSFORMER CKT 1'	287	0.037	100.23	'GEN645011 1-NEBRASKA CITY 1'
13WP	00NR	2	'FROM->TO'	G11_049	'ELK CITY 230KV (ELKCTY-6) 230/138/13.8KV TRANSFORMER CKT 1'	287	0.037	100.21	'GEN542957 1-IATAN UNIT #1'
13WP	00NR	2	'FROM->TO'	G11_049	'ELK CITY 230KV (ELKCTY-6) 230/138/13.8KV TRANSFORMER CKT 1'	287	0.037	100.17	'GEN511839 1-NORTHEASTERN STATION #2'
13WP	00NR	2	'FROM->TO'	G11_049	'ELK CITY 230KV (ELKCTY-6) 230/138/13.8KV TRANSFORMER CKT 1'	287	0.037	100.12	'GEN511840 1-NORTHEASTERN STATION #3'
13WP	00NR	2	'FROM->TO'	G11_049	'ELK CITY 230KV (ELKCTY-6) 230/138/13.8KV TRANSFORMER CKT 1'	287	0.037	100.12	'GEN334070 1-LEWIS CREEK 1'
13WP	00NR	2	'FROM->TO'	G11_049	'ELK CITY 230KV (ELKCTY-6) 230/138/13.8KV TRANSFORMER CKT 1'	287	0.037	100.10	'GEN562084 1-G11_050_3 0.6900'
13WP	00NR	2	'FROM->TO'	G11_049	'ELK CITY 230KV (ELKCTY-6) 230/138/13.8KV TRANSFORMER CKT 1'	287	0.037	100.10	'GEN334071 1-LEWIS CREEK 2'
13WP	00NR	2	'FROM->TO'	G11_049	'ELK CITY 230KV (ELKCTY-6) 230/138/13.8KV TRANSFORMER CKT 1'	287	0.037	100.09	'GEN560623 1-ASGI-10-01 0.6000'
13WP	00NR	2	'FROM->TO'	G11_049	'ELK CITY 230KV (ELKCTY-6) 230/138/13.8KV TRANSFORMER CKT 1'	287	0.037	100.09	'GEN511841 1-NORTHEASTERN STATION #4'
13WP	00NR	2	'FROM->TO'	G11_049	'ELK CITY 230KV (ELKCTY-6) 230/138/13.8KV TRANSFORMER CKT 1'	287	0.037	100.08	'GEN512689 1-GRDA1 GSU1 22'
13WP	00NR	2	'FROM->TO'	G11_049	'ELK CITY 230KV (ELKCTY-6) 230/138/13.8KV TRANSFORMER CKT 1'	287	0.037	100.07	'GEN336170 1-GULF OXY U4'
13WP	00NR	2	'FROM->TO'	G11_049	'ELK CITY 230KV (ELKCTY-6) 230/138/13.8KV TRANSFORMER CKT 1'	287	0.037	100.07	'GEN645001 1-FORT CALHOUN 1'
13WP	00NR	2	'FROM->TO'	G11_049	'ELK CITY 230KV (ELKCTY-6) 230/138/13.8KV TRANSFORMER CKT 1'	287	0.037	100.00	'GEN334432 1-SABINE UNIT 2'

SEASON	GROUP	SCENARIO	DIRECTION	SOURCE	MONITORED ELEMENT	RATE B (MVA)	TDF	(%MVA) LOADING	CONTINGENCY
13WP	00NR	2	'FROM->TO'	G11_049	'ELK CITY 230KV (ELKCTY-6) 230/138/13.8KV TRANSFORMER CKT 1'	287	0.037	100.00	'GEN335612 1-WILLOW GLENN UNIT#2'
13WP	00NR	2	'FROM->TO'	G11_049	'ELK CITY 230KV (ELKCTY-6) 230/138/13.8KV TRANSFORMER CKT 1'	287	0.037	100.00	'GEN515042 1-SEMINOLE 3G'
13WP	00NR	2	'FROM->TO'	G11_049	'ELK CITY 230KV (ELKCTY-6) 230/138/13.8KV TRANSFORMER CKT 1'	287	0.037	100.00	'GEN520811 1-ANADRK4'
13WP	00NR	2	'FROM->TO'	G11_049	'ELK CITY 230KV (ELKCTY-6) 230/138/13.8KV TRANSFORMER CKT 1'	287	0.037	100.00	'GEN520812 1-ANADRK5'
13WP	00NR	2	'FROM->TO'	G11_049	'ELK CITY 230KV (ELKCTY-6) 230/138/13.8KV TRANSFORMER CKT 1'	287	0.037	100.00	'GEN520813 1-ANADRK6'
13WP	00NR	2	'FROM->TO'	G11_049	'ELK CITY 230KV (ELKCTY-6) 230/138/13.8KV TRANSFORMER CKT 1'	287	0.037	100.00	'GEN532651 1-JEFFREY ENERGY CENTER UNIT 1'
13WP	00NR	2	'FROM->TO'	G11_049	'ELK CITY 230KV (ELKCTY-6) 230/138/13.8KV TRANSFORMER CKT 1'	287	0.037	100.00	'GEN532652 1-JEFFREY ENERGY CENTER UNIT 2'
13WP	00NR	2	'FROM->TO'	G11_049	'ELK CITY 230KV (ELKCTY-6) 230/138/13.8KV TRANSFORMER CKT 1'	287	0.037	100.00	'GEN532653 1-JEFFREY ENERGY CENTER UNIT 3'
13WP	00NR	2	'FROM->TO'	G11_049	'ELK CITY 230KV (ELKCTY-6) 230/138/13.8KV TRANSFORMER CKT 1'	287	0.037	100.00	'GEN542951 5-HAWTHORN UNIT #5'
13WP	00NR	2	'FROM->TO'	G11_049	'ELK CITY 230KV (ELKCTY-6) 230/138/13.8KV TRANSFORMER CKT 1'	287	0.037	100.00	'GEN542955 1-LACYGNE UNIT #1'
13WP	00NR	2	'FROM->TO'	G11_049	'ELK CITY 230KV (ELKCTY-6) 230/138/13.8KV TRANSFORMER CKT 1'	287	0.037	100.00	'GEN542956 2-LACYGNE UNIT #2'
13WP	00NR	2	'FROM->TO'	G11_049	'ELK CITY 230KV (ELKCTY-6) 230/138/13.8KV TRANSFORMER CKT 1'	287	0.037	100.00	'GEN542962 2-IATAN UNIT #2'
13WP	00NR	2	'FROM->TO'	G11_049	'ELK CITY 230KV (ELKCTY-6) 230/138/13.8KV TRANSFORMER CKT 1'	287	0.037	100.00	'GEN560687 1-G11-007 0.5750'
12WP	00NR	2	'FROM->TO'	G11_049	'ELK CITY 230KV (ELKCTY-6) 230/138/13.8KV TRANSFORMER CKT 1'	287	0.037	107.48	'GEN336821 1-GRAND GULF UNIT'
12WP	00NR	2	'FROM->TO'	G11_049	'ELK CITY 230KV (ELKCTY-6) 230/138/13.8KV TRANSFORMER CKT 1'	287	0.037	106.87	'GEN336821 1-GRAND GULF UNIT'
12WP	00NR	2	'FROM->TO'	G11_049	'ELK CITY 230KV (ELKCTY-6) 230/138/13.8KV TRANSFORMER CKT 1'	287	0.037	106.70	'GEN336153 1-WATERFORD UNIT#3'
12WP	00NR	2	'FROM->TO'	G11_049	'ELK CITY 230KV (ELKCTY-6) 230/138/13.8KV TRANSFORMER CKT 1'	287	0.037	106.14	'GEN336153 1-WATERFORD UNIT#3'
12WP	00NR	2	'FROM->TO'	G11_049	'ELK CITY 230KV (ELKCTY-6) 230/138/13.8KV TRANSFORMER CKT 1'	287	0.037	106.00	'GEN337911 1-ARKANSAS NUCLEAR ONE UNIT #2'
12WP	00NR	2	'FROM->TO'	G11_049	'ELK CITY 230KV (ELKCTY-6) 230/138/13.8KV TRANSFORMER CKT 1'	287	0.037	105.90	'GEN335831 1-RIVERBEND UNIT#1'
12WP	00NR	2	'FROM->TO'	G11_049	'ELK CITY 230KV (ELKCTY-6) 230/138/13.8KV TRANSFORMER CKT 1'	287	0.037	105.50	'GEN337911 1-ARKANSAS NUCLEAR ONE UNIT #2'
12WP	00NR	2	'FROM->TO'	G11_049	'ELK CITY 230KV (ELKCTY-6) 230/138/13.8KV TRANSFORMER CKT 1'	287	0.037	105.40	'GEN335831 1-RIVERBEND UNIT#1'
12WP	00NR	2	'FROM->TO'	G11_049	'ELK CITY 230KV (ELKCTY-6) 230/138/13.8KV TRANSFORMER CKT 1'	287	0.037	105.02	'GEN337910 1-ARKANSAS NUCLEAR ONE UNIT #1'
12WP	00NR	2	'FROM->TO'	G11_049	'ELK CITY 230KV (ELKCTY-6) 230/138/13.8KV TRANSFORMER CKT 1'	287	0.037	104.66	'GEN532751 1-WOLF CREEK GENERATING STATION UNIT 1'
12WP	00NR	2	'FROM->TO'	G11_049	'ELK CITY 230KV (ELKCTY-6) 230/138/13.8KV TRANSFORMER CKT 1'	287	0.037	104.50	'GEN337652 1-WHITE BLUFF UNIT #1'
12WP	00NR	2	'FROM->TO'	G11_049	'ELK CITY 230KV (ELKCTY-6) 230/138/13.8KV TRANSFORMER CKT 1'	287	0.037	104.50	'GEN337910 1-ARKANSAS NUCLEAR ONE UNIT #1'
12WP	00NR	2	'FROM->TO'	G11_049	'ELK CITY 230KV (ELKCTY-6) 230/138/13.8KV TRANSFORMER CKT 1'	287	0.037	104.40	'GEN338146 1-INDEPENDENCE UNIT #2'
12WP	00NR	2	'FROM->TO'	G11_049	'ELK CITY 230KV (ELKCTY-6) 230/138/13.8KV TRANSFORMER CKT 1'	287	0.037	104.39	'GEN338143 1-INDEPENDENCE UNIT #1'
12WP	00NR	2	'FROM->TO'	G11_049	'ELK CITY 230KV (ELKCTY-6) 230/138/13.8KV TRANSFORMER CKT 1'	287	0.037	104.15	'GEN532751 1-WOLF CREEK GENERATING STATION UNIT 1'
12WP	00NR	2	'FROM->TO'	G11_049	'ELK CITY 230KV (ELKCTY-6) 230/138/13.8KV TRANSFORMER CKT 1'	287	0.037	104.13	'GEN501801 1-DOLET HILLS UNIT1'
12WP	00NR	2	'FROM->TO'	G11_049	'ELK CITY 230KV (ELKCTY-6) 230/138/13.8KV TRANSFORMER CKT 1'	287	0.037	104.03	'GEN337041 1-GERALD ANDRUS'
12WP	00NR	2	'FROM->TO'	G11_049	'ELK CITY 230KV (ELKCTY-6) 230/138/13.8KV TRANSFORMER CKT 1'	287	0.037	104.00	'GEN337652 1-WHITE BLUFF UNIT #1'
12WP	00NR	2	'FROM->TO'	G11_049	'ELK CITY 230KV (ELKCTY-6) 230/138/13.8KV TRANSFORMER CKT 1'	287	0.037	103.90	'GEN336251 1-NINEMILE POINT UNIT#4'
12WP	00NR	2	'FROM->TO'	G11_049	'ELK CITY 230KV (ELKCTY-6) 230/138/13.8KV TRANSFORMER CKT 1'	287	0.037	103.90	'GEN336252 1-NINEMILE POINT UNIT#5'
12WP	00NR	2	'FROM->TO'	G11_049	'ELK CITY 230KV (ELKCTY-6) 230/138/13.8KV TRANSFORMER CKT 1'	287	0.037	103.90	'GEN338146 1-INDEPENDENCE UNIT #2'
12WP	00NR	2	'FROM->TO'	G11_049	'ELK CITY 230KV (ELKCTY-6) 230/138/13.8KV TRANSFORMER CKT 1'	287	0.037	103.89	'GEN338143 1-INDEPENDENCE UNIT #1'
12WP	00NR	2	'FROM->TO'	G11_049	'ELK CITY 230KV (ELKCTY-6) 230/138/13.8KV TRANSFORMER CKT 1'	287	0.037	103.86	'GEN337653 1-WHITE BLUFF UNIT #2'
12WP	00NR	2	'FROM->TO'	G11_049	'ELK CITY 230KV (ELKCTY-6) 230/138/13.8KV TRANSFORMER CKT 1'	287	0.037	103.64	'GEN501801 1-DOLET HILLS UNIT1'
12WP	00NR	2	'FROM->TO'	G11_049	'ELK CITY 230KV (ELKCTY-6) 230/138/13.8KV TRANSFORMER CKT 1'	287	0.037	103.58	'GEN338388 1-1PLUMPT 23.000'
12WP	00NR	2	'FROM->TO'	G11_049	'ELK CITY 230KV (ELKCTY-6) 230/138/13.8KV TRANSFORMER CKT 1'	287	0.037	103.54	'GEN337041 1-GERALD ANDRUS'
12WP	00NR	2	'FROM->TO'	G11_049	'ELK CITY 230KV (ELKCTY-6) 230/138/13.8KV TRANSFORMER CKT 1'	287	0.037	103.50	'GEN501813 1-RODEMACHER UNIT 3'
12WP	00NR	2	'FROM->TO'	G11_049	'ELK CITY 230KV (ELKCTY-6) 230/138/13.8KV TRANSFORMER CKT 1'	287	0.037	103.40	'GEN336251 1-NINEMILE POINT UNIT#4'
12WP	00NR	2	'FROM->TO'	G11_049	'ELK CITY 230KV (ELKCTY-6) 230/138/13.8KV TRANSFORMER CKT 1'	287	0.037	103.40	'GEN336252 1-NINEMILE POINT UNIT#5'
12WP	00NR	2	'FROM->TO'	G11_049	'ELK CITY 230KV (ELKCTY-6) 230/138/13.8KV TRANSFORMER CKT 1'	287	0.037	103.37	'GEN337653 1-WHITE BLUFF UNIT #2'
12WP	00NR	2	'FROM->TO'	G11_049	'ELK CITY 230KV (ELKCTY-6) 230/138/13.8KV TRANSFORMER CKT 1'	287	0.037	103.31	'GEN520947 1-HUGO1'
12WP	00NR	2	'FROM->TO'	G11_049	'ELK CITY 230KV (ELKCTY-6) 230/138/13.8KV TRANSFORMER CKT 1'	287	0.037	103.17	'GEN336831 1-BAXTER WILSON SES'
12WP	00NR	2	'FROM->TO'	G11_049	'ELK CITY 230KV (ELKCTY-6) 230/138/13.8KV TRANSFORMER CKT 1'	287	0.037	103.10	'GEN338388 1-1PLUMPT 23.000'
12WP	00NR	2	'FROM->TO'	G11_049	'ELK CITY 230KV (ELKCTY-6) 230/138/13.8KV TRANSFORMER CKT 1'	287	0.037	103.06	'GEN501812 1-RODEMACHER UNIT 2'
12WP	00NR	2	'FROM->TO'	G11_049	'ELK CITY 230KV (ELKCTY-6) 230/138/13.8KV TRANSFORMER CKT 1'	287	0.037	103.03	'GEN501813 1-RODEMACHER UNIT 3'
12WP	00NR	2	'FROM->TO'	G11_049	'ELK CITY 230KV (ELKCTY-6) 230/138/13.8KV TRANSFORMER CKT 1'	287	0.037	103.03	'GEN335206 1-NELSON UNIT 6'
12WP	00NR	2	'FROM->TO'	G11_049	'ELK CITY 230KV (ELKCTY-6) 230/138/13.8KV TRANSFORMER CKT 1'	287	0.037	103.02	'GEN509403 1-PIRKEY GENERATION'
12WP	00NR	2	'FROM->TO'	G11_049	'ELK CITY 230KV (ELKCTY-6) 230/138/13.8KV TRANSFORMER CKT 1'	287	0.037	102.87	'GEN509416 1-TURK GENERATION'
12WP	00NR	2	'FROM->TO'	G11_049	'ELK CITY 230KV (ELKCTY-6) 230/138/13.8KV TRANSFORMER CKT 1'	287	0.037	102.84	'GEN520947 1-HUGO1'
12WP	00NR	2	'FROM->TO'	G11_049	'ELK CITY 230KV (ELKCTY-6) 230/138/13.8KV TRANSFORMER CKT 1'	287	0.037	102.79	'GEN334440 1-SABINE UNIT 4'
12WP	00NR	2	'FROM->TO'	G11_049	'ELK CITY 230KV (ELKCTY-6) 230/138/13.8KV TRANSFORMER CKT 1'	287	0.037	102.73	'GEN336801 1-BAXTER WILSON UNIT #1'
12WP	00NR	2	'FROM->TO'	G11_049	'ELK CITY 230KV (ELKCTY-6) 230/138/13.8KV TRANSFORMER CKT 1'	287	0.037	102.70	'GEN336831 1-BAXTER WILSON SES'
12WP	00NR	2	'FROM->TO'	G11_049	'ELK CITY 230KV (ELKCTY-6) 230/138/13.8KV TRANSFORMER CKT 1'	287	0.037	102.59	'GEN501812 1-RODEMACHER UNIT 2'
12WP	00NR	2	'FROM->TO'	G11_049	'ELK CITY 230KV (ELKCTY-6) 230/138/13.8KV TRANSFORMER CKT 1'	287	0.037	102.56	'GEN335206 1-NELSON UNIT 6'
12WP	00NR	2	'FROM->TO'	G11_049	'ELK CITY 230KV (ELKCTY-6) 230/138/13.8KV TRANSFORMER CKT 1'	287	0.037	102.56	'GEN509403 1-PIRKEY GENERATION'
12WP	00NR	2	'FROM->TO'	G11_049	'ELK CITY 230KV (ELKCTY-6) 230/138/13.8KV TRANSFORMER CKT 1'	287	0.037	102.50	'GEN335204 1-NELSON UNIT 4'
12WP	00NR	2	'FROM->TO'	G11_049	'ELK CITY 230KV (ELKCTY-6) 230/138/13.8KV TRANSFORMER CKT 1'	287	0.037	102.41	'GEN509416 1-TURK GENERATION'
12WP	00NR	2	'FROM->TO'	G11_049	'ELK CITY 230KV (ELKCTY-6) 230/138/13.8KV TRANSFORMER CKT 1'	287	0.037	102.41	'GEN334433 1-SABINE UNIT 3'
12WP	00NR	2	'FROM->TO'	G11_049	'ELK CITY 230KV (ELKCTY-6) 230/138/13.8KV TRANSFORMER CKT 1'	287	0.037	102.40	'GEN334441 1-SABINE UNIT 5'
12WP	00NR	2	'FROM->TO'	G11_049	'ELK CITY 230KV (ELKCTY-6) 230/138/13.8KV TRANSFORMER CKT 1'	287	0.037	102.38	'GEN509404 1-WELSH #1'
12WP	00NR	2	'FROM->TO'	G11_049	'ELK CITY 230KV (ELKCTY-6) 230/138/13.8KV TRANSFORMER CKT 1'	287	0.037	102.38	'GEN509405 1-WELSH #2'
12WP	00NR	2	'FROM->TO'	G11_049	'ELK CITY 230KV (ELKCTY-6) 230/138/13.8KV TRANSFORMER CKT 1'	287	0.037	102.38	'GEN509406 1-WELSH #3'
12WP	00NR	2	'FROM->TO'	G11_049	'ELK CITY 230KV (ELKCTY-6) 230/138/13.8KV TRANSFORMER CKT 1'	287	0.037	102.33	'GEN334440 1-SABINE UNIT 4'
12WP	00NR	2	'FROM->TO'	G11_049	'ELK CITY 230KV (ELKCTY-6) 230/138/13.8KV TRANSFORMER CKT 1'	287	0.037	102.27	'GEN336801 1-BAXTER WILSON UNIT #1'
12WP	00NR	2	'FROM->TO'	G11_049	'ELK CITY 230KV (ELKCTY-6) 230/138/13.8KV TRANSFORMER CKT 1'	287	0.037	102.17	'GEN514806 1-SOONER UNIT 2'
12WP	00NR	2	'FROM->TO'	G11_049	'ELK CITY 230KV (ELKCTY-6) 230/138/13.8KV TRANSFORMER CKT 1'	287	0.037	102.16	'GEN515226 1-MUSKOGEE 6G'
12WP	00NR	2	'FROM->TO'	G11_049	'ELK CITY 230KV (ELKCTY-6) 230/138/13.8KV TRANSFORMER CKT 1'	287	0.037	102.15	'GEN514805 1-SOONER UNIT 1'
12WP	00NR	2	'FROM->TO'	G11_049	'ELK CITY 230KV (ELKCTY-6) 230/138/13.8KV TRANSFORMER CKT 1'	287	0.037	102.15	'GEN560225 1-G10-43 18.000'
12WP	00NR	2	'FROM->TO'	G11_049	'ELK CITY 230KV (ELKCTY-6) 230/138/13.8KV TRANSFORMER CKT 1'	287	0.037	102.12	'GEN560323 1-G10-40 0.6900'
12WP	00NR	2	'FROM->TO'	G11_049	'ELK CITY 230KV (ELKCTY-6) 230/138/13.8KV TRANSFORMER CKT 1'	287	0.037	102.11	'GEN512688 2-GRDA1 GSU2 22'
12WP	00NR	2	'FROM->TO'	G11_049	'ELK CITY 230KV (ELKCTY-6) 230/138/13.8KV TRANSFORMER CKT 1'	287	0.037	102.04	'GEN335204 1-NELSON UNIT 4'
12WP	00NR	2	'FROM->TO'	G11_049	'ELK CITY 230KV (ELKCTY-6) 230/138/13.8KV TRANSFORMER CKT 1'	287	0.037	102.01	'GEN509394 1-FLINT CREEK'
12WP	00NR	2	'FROM->TO'	G11_049	'ELK CITY 230KV (ELKCTY-6) 230/138/13.8KV TRANSFORMER CKT 1'	287	0.037	101.96	'GEN334433 1-SABINE UNIT 3'
12WP	00NR	2	'FROM->TO'	G11_049	'ELK CITY 230KV (ELKCTY-6) 230/138/13.8KV TRANSFORMER CKT 1'	287	0.037	101.96	'GEN300006 1-NEW MADRID UNIT 1'
12WP	00NR	2	'FROM->TO'	G11_049	'ELK CITY 230KV (ELKCTY-6) 230/138/13.8KV TRANSFORMER CKT 1'	287	0.037	101.96	'GEN300007 1-NEW MADRID UNIT 2'

SEASON	GROUP	SCENARIO	DIRECTION	SOURCE	MONITORED ELEMENT	RATE B (MVA)	TDF	(%MVA) LOADING	CONTINGENCY
12WP	00NR	2	'FROM->TO'	G11_049	'ELK CITY 230KV (ELKCTY-6) 230/138/13.8KV TRANSFORMER CKT 1'	287	0.037	101.95	'GEN334441 1-SABINE UNIT 5'
12WP	00NR	2	'FROM->TO'	G11_049	'ELK CITY 230KV (ELKCTY-6) 230/138/13.8KV TRANSFORMER CKT 1'	287	0.037	101.94	'GEN515225 1-MUSKOGEE 5G'
12WP	00NR	2	'FROM->TO'	G11_049	'ELK CITY 230KV (ELKCTY-6) 230/138/13.8KV TRANSFORMER CKT 1'	287	0.037	101.94	'GEN515223 1-MUSKOGEE 4G'
12WP	00NR	2	'FROM->TO'	G11_049	'ELK CITY 230KV (ELKCTY-6) 230/138/13.8KV TRANSFORMER CKT 1'	287	0.037	101.93	'GEN509405 1-WELSH #2'
12WP	00NR	2	'FROM->TO'	G11_049	'ELK CITY 230KV (ELKCTY-6) 230/138/13.8KV TRANSFORMER CKT 1'	287	0.037	101.93	'GEN509406 1-WELSH #3'
12WP	00NR	2	'FROM->TO'	G11_049	'ELK CITY 230KV (ELKCTY-6) 230/138/13.8KV TRANSFORMER CKT 1'	287	0.037	101.93	'GEN509404 1-WELSH #1'
12WP	00NR	2	'FROM->TO'	G11_049	'ELK CITY 230KV (ELKCTY-6) 230/138/13.8KV TRANSFORMER CKT 1'	287	0.037	101.88	'GEN515042 1-SEMINOLE 3G'
12WP	00NR	2	'FROM->TO'	G11_049	'ELK CITY 230KV (ELKCTY-6) 230/138/13.8KV TRANSFORMER CKT 1'	287	0.037	101.82	'GEN511839 1-NORTHEASTERN STATION #2'
12WP	00NR	2	'FROM->TO'	G11_049	'ELK CITY 230KV (ELKCTY-6) 230/138/13.8KV TRANSFORMER CKT 1'	287	0.037	101.79	'GEN542962 2-IATAN UNIT #2'
12WP	00NR	2	'FROM->TO'	G11_049	'ELK CITY 230KV (ELKCTY-6) 230/138/13.8KV TRANSFORMER CKT 1'	287	0.037	101.77	'GEN511840 1-NORTHEASTERN STATION #3'
12WP	00NR	2	'FROM->TO'	G11_049	'ELK CITY 230KV (ELKCTY-6) 230/138/13.8KV TRANSFORMER CKT 1'	287	0.037	101.74	'GEN512689 1-GRDA1 GSU1 22'
12WP	00NR	2	'FROM->TO'	G11_049	'ELK CITY 230KV (ELKCTY-6) 230/138/13.8KV TRANSFORMER CKT 1'	287	0.037	101.73	'GEN511841 1-NORTHEASTERN STATION #4'
12WP	00NR	2	'FROM->TO'	G11_049	'ELK CITY 230KV (ELKCTY-6) 230/138/13.8KV TRANSFORMER CKT 1'	287	0.037	101.72	'GEN514806 1-SOONER UNIT 2'
12WP	00NR	2	'FROM->TO'	G11_049	'ELK CITY 230KV (ELKCTY-6) 230/138/13.8KV TRANSFORMER CKT 1'	287	0.037	101.72	'GEN515226 1-MUSKOGEE 6G'
12WP	00NR	2	'FROM->TO'	G11_049	'ELK CITY 230KV (ELKCTY-6) 230/138/13.8KV TRANSFORMER CKT 1'	287	0.037	101.70	'GEN514805 1-SOONER UNIT 1'
12WP	00NR	2	'FROM->TO'	G11_049	'ELK CITY 230KV (ELKCTY-6) 230/138/13.8KV TRANSFORMER CKT 1'	287	0.037	101.70	'GEN336170 1-GULF OXY U4'
12WP	00NR	2	'FROM->TO'	G11_049	'ELK CITY 230KV (ELKCTY-6) 230/138/13.8KV TRANSFORMER CKT 1'	287	0.037	101.68	'GEN560323 1-G10-40 0.6900'
12WP	00NR	2	'FROM->TO'	G11_049	'ELK CITY 230KV (ELKCTY-6) 230/138/13.8KV TRANSFORMER CKT 1'	287	0.037	101.66	'GEN300003 1-THOMAS HILL UNIT 3'
12WP	00NR	2	'FROM->TO'	G11_049	'ELK CITY 230KV (ELKCTY-6) 230/138/13.8KV TRANSFORMER CKT 1'	287	0.037	101.66	'GEN512688 2-GRDA1 GSU2 22'
12WP	00NR	2	'FROM->TO'	G11_049	'ELK CITY 230KV (ELKCTY-6) 230/138/13.8KV TRANSFORMER CKT 1'	287	0.037	101.66	'GEN515041 1-SEMINOLE 2G'
12WP	00NR	2	'FROM->TO'	G11_049	'ELK CITY 230KV (ELKCTY-6) 230/138/13.8KV TRANSFORMER CKT 1'	287	0.037	101.65	'GEN542955 1-LACYGNE UNIT #1'
12WP	00NR	2	'FROM->TO'	G11_049	'ELK CITY 230KV (ELKCTY-6) 230/138/13.8KV TRANSFORMER CKT 1'	287	0.037	101.60	'GEN560225 1-G10-43 18.000'
12WP	00NR	2	'FROM->TO'	G11_049	'ELK CITY 230KV (ELKCTY-6) 230/138/13.8KV TRANSFORMER CKT 1'	287	0.037	101.58	'GEN542956 2-LACYGNE UNIT #2'
12WP	00NR	2	'FROM->TO'	G11_049	'ELK CITY 230KV (ELKCTY-6) 230/138/13.8KV TRANSFORMER CKT 1'	287	0.037	101.56	'GEN509394 1-FLINT CREEK'
12WP	00NR	2	'FROM->TO'	G11_049	'ELK CITY 230KV (ELKCTY-6) 230/138/13.8KV TRANSFORMER CKT 1'	287	0.037	101.52	'GEN515040 1-SEMINOLE 1G'
12WP	00NR	2	'FROM->TO'	G11_049	'ELK CITY 230KV (ELKCTY-6) 230/138/13.8KV TRANSFORMER CKT 1'	287	0.037	101.52	'GEN300006 1-NEW MADRID UNIT 1'
12WP	00NR	2	'FROM->TO'	G11_049	'ELK CITY 230KV (ELKCTY-6) 230/138/13.8KV TRANSFORMER CKT 1'	287	0.037	101.51	'GEN300007 1-NEW MADRID UNIT 2'
12WP	00NR	2	'FROM->TO'	G11_049	'ELK CITY 230KV (ELKCTY-6) 230/138/13.8KV TRANSFORMER CKT 1'	287	0.037	101.50	'GEN515225 1-MUSKOGEE 5G'
12WP	00NR	2	'FROM->TO'	G11_049	'ELK CITY 230KV (ELKCTY-6) 230/138/13.8KV TRANSFORMER CKT 1'	287	0.037	101.50	'GEN515223 1-MUSKOGEE 4G'
12WP	00NR	2	'FROM->TO'	G11_049	'ELK CITY 230KV (ELKCTY-6) 230/138/13.8KV TRANSFORMER CKT 1'	287	0.037	101.45	'GEN515042 1-SEMINOLE 3G'
12WP	00NR	2	'FROM->TO'	G11_049	'ELK CITY 230KV (ELKCTY-6) 230/138/13.8KV TRANSFORMER CKT 1'	287	0.037	101.45	'GEN542957 1-IATAN UNIT #1'
12WP	00NR	2	'FROM->TO'	G11_049	'ELK CITY 230KV (ELKCTY-6) 230/138/13.8KV TRANSFORMER CKT 1'	287	0.037	101.38	'GEN511839 1-NORTHEASTERN STATION #2'
12WP	00NR	2	'FROM->TO'	G11_049	'ELK CITY 230KV (ELKCTY-6) 230/138/13.8KV TRANSFORMER CKT 1'	287	0.037	101.34	'GEN542962 2-IATAN UNIT #2'
12WP	00NR	2	'FROM->TO'	G11_049	'ELK CITY 230KV (ELKCTY-6) 230/138/13.8KV TRANSFORMER CKT 1'	287	0.037	101.34	'GEN334070 1-LEWIS CREEK 1'
12WP	00NR	2	'FROM->TO'	G11_049	'ELK CITY 230KV (ELKCTY-6) 230/138/13.8KV TRANSFORMER CKT 1'	287	0.037	101.33	'GEN511840 1-NORTHEASTERN STATION #3'
12WP	00NR	2	'FROM->TO'	G11_049	'ELK CITY 230KV (ELKCTY-6) 230/138/13.8KV TRANSFORMER CKT 1'	287	0.037	101.32	'GEN334071 1-LEWIS CREEK 2'
12WP	00NR	2	'FROM->TO'	G11_049	'ELK CITY 230KV (ELKCTY-6) 230/138/13.8KV TRANSFORMER CKT 1'	287	0.037	101.30	'GEN512689 1-GRDA1 GSU1 22'
12WP	00NR	2	'FROM->TO'	G11_049	'ELK CITY 230KV (ELKCTY-6) 230/138/13.8KV TRANSFORMER CKT 1'	287	0.037	101.29	'GEN511841 1-NORTHEASTERN STATION #4'
12WP	00NR	2	'FROM->TO'	G11_049	'ELK CITY 230KV (ELKCTY-6) 230/138/13.8KV TRANSFORMER CKT 1'	287	0.037	101.26	'GEN336170 1-GULF OXY U4'
12WP	00NR	2	'FROM->TO'	G11_049	'ELK CITY 230KV (ELKCTY-6) 230/138/13.8KV TRANSFORMER CKT 1'	287	0.037	101.25	'GEN520813 1-ANADRK6'
12WP	00NR	2	'FROM->TO'	G11_049	'ELK CITY 230KV (ELKCTY-6) 230/138/13.8KV TRANSFORMER CKT 1'	287	0.037	101.25	'GEN520812 1-ANADRK5'
12WP	00NR	2	'FROM->TO'	G11_049	'ELK CITY 230KV (ELKCTY-6) 230/138/13.8KV TRANSFORMER CKT 1'	287	0.037	101.24	'GEN542951 5-HAWTHORN UNIT #5'
12WP	00NR	2	'FROM->TO'	G11_049	'ELK CITY 230KV (ELKCTY-6) 230/138/13.8KV TRANSFORMER CKT 1'	287	0.037	101.23	'GEN300003 1-THOMAS HILL UNIT 3'
12WP	00NR	2	'FROM->TO'	G11_049	'ELK CITY 230KV (ELKCTY-6) 230/138/13.8KV TRANSFORMER CKT 1'	287	0.037	101.22	'GEN520811 1-ANADRK4'
12WP	00NR	2	'FROM->TO'	G11_049	'ELK CITY 230KV (ELKCTY-6) 230/138/13.8KV TRANSFORMER CKT 1'	287	0.037	101.22	'GEN515041 1-SEMINOLE 2G'
12WP	00NR	2	'FROM->TO'	G11_049	'ELK CITY 230KV (ELKCTY-6) 230/138/13.8KV TRANSFORMER CKT 1'	287	0.037	101.21	'GEN532651 1-JEFFREY ENERGY CENTER UNIT 1'
12WP	00NR	2	'FROM->TO'	G11_049	'ELK CITY 230KV (ELKCTY-6) 230/138/13.8KV TRANSFORMER CKT 1'	287	0.037	101.21	'GEN542955 1-LACYGNE UNIT #1'
12WP	00NR	2	'FROM->TO'	G11_049	'ELK CITY 230KV (ELKCTY-6) 230/138/13.8KV TRANSFORMER CKT 1'	287	0.037	101.20	'GEN532652 1-JEFFREY ENERGY CENTER UNIT 2'
12WP	00NR	2	'FROM->TO'	G11_049	'ELK CITY 230KV (ELKCTY-6) 230/138/13.8KV TRANSFORMER CKT 1'	287	0.037	101.20	'GEN335612 1-WILLOW GLENN UNIT#2'
12WP	00NR	2	'FROM->TO'	G11_049	'ELK CITY 230KV (ELKCTY-6) 230/138/13.8KV TRANSFORMER CKT 1'	287	0.037	101.16	'GEN334432 1-SABINE UNIT 2'
12WP	00NR	2	'FROM->TO'	G11_049	'ELK CITY 230KV (ELKCTY-6) 230/138/13.8KV TRANSFORMER CKT 1'	287	0.037	101.16	'GEN334431 1-SABINE UNIT 1'
12WP	00NR	2	'FROM->TO'	G11_049	'ELK CITY 230KV (ELKCTY-6) 230/138/13.8KV TRANSFORMER CKT 1'	287	0.037	101.16	'GEN541151 3-SIBLEY GENERATING UNIT #3'
12WP	00NR	2	'FROM->TO'	G11_049	'ELK CITY 230KV (ELKCTY-6) 230/138/13.8KV TRANSFORMER CKT 1'	287	0.037	101.15	'GEN532653 1-JEFFREY ENERGY CENTER UNIT 3'
12WP	00NR	2	'FROM->TO'	G11_049	'ELK CITY 230KV (ELKCTY-6) 230/138/13.8KV TRANSFORMER CKT 1'	287	0.037	101.14	'GEN542956 2-LACYGNE UNIT #2'
12WP	00NR	2	'FROM->TO'	G11_049	'ELK CITY 230KV (ELKCTY-6) 230/138/13.8KV TRANSFORMER CKT 1'	287	0.037	101.14	'GEN505432 1-SIKESTON'
12WP	00NR	2	'FROM->TO'	G11_049	'ELK CITY 230KV (ELKCTY-6) 230/138/13.8KV TRANSFORMER CKT 1'	287	0.037	101.09	'GEN515040 1-SEMINOLE 1G'
12WP	00NR	2	'FROM->TO'	G11_049	'ELK CITY 230KV (ELKCTY-6) 230/138/13.8KV TRANSFORMER CKT 1'	287	0.037	101.01	'GEN542957 1-IATAN UNIT #1'
12WP	00NR	2	'FROM->TO'	G11_049	'ELK CITY 230KV (ELKCTY-6) 230/138/13.8KV TRANSFORMER CKT 1'	287	0.037	100.91	'GEN334070 1-LEWIS CREEK 1'
12WP	00NR	2	'FROM->TO'	G11_049	'ELK CITY 230KV (ELKCTY-6) 230/138/13.8KV TRANSFORMER CKT 1'	287	0.037	100.89	'GEN334071 1-LEWIS CREEK 2'
12WP	00NR	2	'FROM->TO'	G11_049	'ELK CITY 230KV (ELKCTY-6) 230/138/13.8KV TRANSFORMER CKT 1'	287	0.037	100.83	'GEN520812 1-ANADRK5'
12WP	00NR	2	'FROM->TO'	G11_049	'ELK CITY 230KV (ELKCTY-6) 230/138/13.8KV TRANSFORMER CKT 1'	287	0.037	100.83	'GEN520813 1-ANADRK6'
12WP	00NR	2	'FROM->TO'	G11_049	'ELK CITY 230KV (ELKCTY-6) 230/138/13.8KV TRANSFORMER CKT 1'	287	0.037	100.81	'GEN542951 5-HAWTHORN UNIT #5'
12WP	00NR	2	'FROM->TO'	G11_049	'ELK CITY 230KV (ELKCTY-6) 230/138/13.8KV TRANSFORMER CKT 1'	287	0.037	100.80	'GEN520811 1-ANADRK4'
12WP	00NR	2	'FROM->TO'	G11_049	'ELK CITY 230KV (ELKCTY-6) 230/138/13.8KV TRANSFORMER CKT 1'	287	0.037	100.78	'GEN532651 1-JEFFREY ENERGY CENTER UNIT 1'
12WP	00NR	2	'FROM->TO'	G11_049	'ELK CITY 230KV (ELKCTY-6) 230/138/13.8KV TRANSFORMER CKT 1'	287	0.037	100.77	'GEN532652 1-JEFFREY ENERGY CENTER UNIT 2'
12WP	00NR	2	'FROM->TO'	G11_049	'ELK CITY 230KV (ELKCTY-6) 230/138/13.8KV TRANSFORMER CKT 1'	287	0.037	100.77	'GEN335612 1-WILLOW GLENN UNIT#2'
12WP	00NR	2	'FROM->TO'	G11_049	'ELK CITY 230KV (ELKCTY-6) 230/138/13.8KV TRANSFORMER CKT 1'	287	0.037	100.73	'GEN334431 1-SABINE UNIT 1'
12WP	00NR	2	'FROM->TO'	G11_049	'ELK CITY 230KV (ELKCTY-6) 230/138/13.8KV TRANSFORMER CKT 1'	287	0.037	100.73	'GEN334432 1-SABINE UNIT 2'
12WP	00NR	2	'FROM->TO'	G11_049	'ELK CITY 230KV (ELKCTY-6) 230/138/13.8KV TRANSFORMER CKT 1'	287	0.037	100.73	'GEN541151 3-SIBLEY GENERATING UNIT #3'
12WP	00NR	2	'FROM->TO'	G11_049	'ELK CITY 230KV (ELKCTY-6) 230/138/13.8KV TRANSFORMER CKT 1'	287	0.037	100.72	'GEN532653 1-JEFFREY ENERGY CENTER UNIT 3'
12WP	00NR	2	'FROM->TO'	G11_049	'ELK CITY 230KV (ELKCTY-6) 230/138/13.8KV TRANSFORMER CKT 1'	287	0.037	100.08	'BASE CASE'
13WP	00NR	2	'FROM->TO'	G11_049	'ELK CITY 230KV (ELKCTY-6) 230/138/13.8KV TRANSFORMER CKT 1'	287	0.037	100.62	'MOORE COUNTY INTERCHANGE - POTTER COUNTY INTERCHANGE 230KV CKT 1'
13WP	00NR	2	'FROM->TO'	G11_049	'ELK CITY 230KV (ELKCTY-6) 230/138/13.8KV TRANSFORMER CKT 1'	287	0.037	100.18	'MOORE COUNTY INTERCHANGE - POTTER COUNTY INTERCHANGE 230KV CKT 1'
13WP	00NR	2	'FROM->TO'	G11_049	'ELK CITY 230KV (ELKCTY-6) 230/138/13.8KV TRANSFORMER CKT 1'	287	0.037	100.46	'TOLK STATION EAST - TUCO INTERCHANGE 230KV CKT 1'
13WP	00NR	2	'FROM->TO'	G11_049	'ELK CITY 230KV (ELKCTY-6) 230/138/13.8KV TRANSFORMER CKT 1'	287	0.037	100.00	'TOLK STATION EAST - TUCO INTERCHANGE 230KV CKT 1'
12WP	00NR	2	'FROM->TO'	G11_049	'ELK CITY 230KV (ELKCTY-6) 230/138/13.8KV TRANSFORMER CKT 1'	287	0.037	101.87	'MOORE COUNTY INTERCHANGE - POTTER COUNTY INTERCHANGE 230KV CKT 1'
12WP	00NR	2	'FROM->TO'	G11_049	'ELK CITY 230KV (ELKCTY-6) 230/138/13.8KV TRANSFORMER CKT 1'	287	0.037	101.39	'MOORE COUNTY INTERCHANGE - POTTER COUNTY INTERCHANGE 230KV CKT 1'
12WP	00NR	2	'FROM->TO'	G11_049	'ELK CITY 230KV (ELKCTY-6) 230/138/13.8KV TRANSFORMER CKT 1'	287	0.037	101.63	'TOLK STATION EAST - TUCO INTERCHANGE 230KV CKT 1'

SEASON	GROUP	SCENARIO	DIRECTION	SOURCE	MONITORED ELEMENT	RATE B (MVA)	TDF	(%MVA) LOADING	CONTINGENCY
12WP	00NR	2	'FROM->TO'	G11_049	'ELK CITY 230KV (ELKCTY-6) 230/138/13.8KV TRANSFORMER CKT 1'	287	0.037	101.17	'TOLK STATION EAST - TUCO INTERCHANGE 230KV CKT 1'
13WP	00NR	2	'FROM->TO'	G11_049	'ELK CITY 230KV (ELKCTY-6) 230/138/13.8KV TRANSFORMER CKT 1'	287	0.037	100.07	'TUCO INTERCHANGE (GE M1022338) 345/230/13.2KV TRANSFORMER CKT 1'
13WP	00NR	2	'FROM->TO'	G11_049	'ELK CITY 230KV (ELKCTY-6) 230/138/13.8KV TRANSFORMER CKT 1'	287	0.037	105.57	'G05-17T 345.00 - Hitchland Interchange 345KV CKT 1'
13WP	00NR	2	'FROM->TO'	G11_049	'ELK CITY 230KV (ELKCTY-6) 230/138/13.8KV TRANSFORMER CKT 1'	287	0.037	104.94	'G05-17T 345.00 - Hitchland Interchange 345KV CKT 1'
13WP	00NR	2	'FROM->TO'	G11_049	'ELK CITY 230KV (ELKCTY-6) 230/138/13.8KV TRANSFORMER CKT 1'	287	0.037	104.51	'G05-17T 345.00 - POTTER COUNTY INTERCHANGE 345KV CKT 1'
13WP	00NR	2	'FROM->TO'	G11_049	'ELK CITY 230KV (ELKCTY-6) 230/138/13.8KV TRANSFORMER CKT 1'	287	0.037	103.92	'G05-17T 345.00 - POTTER COUNTY INTERCHANGE 345KV CKT 1'
12WP	00NR	2	'FROM->TO'	G11_049	'ELK CITY 230KV (ELKCTY-6) 230/138/13.8KV TRANSFORMER CKT 1'	287	0.037	101.24	'TUCO INTERCHANGE (GE M1022338) 345/230/13.2KV TRANSFORMER CKT 1'
12WP	00NR	2	'FROM->TO'	G11_049	'ELK CITY 230KV (ELKCTY-6) 230/138/13.8KV TRANSFORMER CKT 1'	287	0.037	100.79	'TUCO INTERCHANGE (GE M1022338) 345/230/13.2KV TRANSFORMER CKT 1'
12WP	00NR	2	'FROM->TO'	G11_049	'ELK CITY 230KV (ELKCTY-6) 230/138/13.8KV TRANSFORMER CKT 1'	287	0.037	107.13	'G05-17T 345.00 - Hitchland Interchange 345KV CKT 1'
12WP	00NR	2	'FROM->TO'	G11_049	'ELK CITY 230KV (ELKCTY-6) 230/138/13.8KV TRANSFORMER CKT 1'	287	0.037	106.44	'G05-17T 345.00 - Hitchland Interchange 345KV CKT 1'
12WP	00NR	2	'FROM->TO'	G11_049	'ELK CITY 230KV (ELKCTY-6) 230/138/13.8KV TRANSFORMER CKT 1'	287	0.037	106.13	'G05-17T 345.00 - POTTER COUNTY INTERCHANGE 345KV CKT 1'
12WP	00NR	2	'FROM->TO'	G11_049	'ELK CITY 230KV (ELKCTY-6) 230/138/13.8KV TRANSFORMER CKT 1'	287	0.037	105.48	'G05-17T 345.00 - POTTER COUNTY INTERCHANGE 345KV CKT 1'
13SP	00NR	2	'TO->FROM'	G11_049	'CEDARDALE - MOORELAND 138KV CKT 1'	179	0.037	106.10	'DBL-MATT-TAT'
13SP	00NR	2	'FROM->TO'	G11_049	'CEDARDALE - OKEENE 138KV CKT 1'	179	0.037	104.51	'DBL-MATT-TAT'
13WP	00NR	2	'FROM->TO'	G11_049	'ELK CITY 230KV (ELKCTY-6) 230/138/13.8KV TRANSFORMER CKT 1'	287	0.037	102.11	'G11_012T 230.00 - HITCHLAND INTERCHANGE 230KV CKT 1'
13WP	00NR	2	'FROM->TO'	G11_049	'ELK CITY 230KV (ELKCTY-6) 230/138/13.8KV TRANSFORMER CKT 1'	287	0.037	101.63	'G11_012T 230.00 - HITCHLAND INTERCHANGE 230KV CKT 1'
12WP	00NR	2	'FROM->TO'	G11_049	'ELK CITY 230KV (ELKCTY-6) 230/138/13.8KV TRANSFORMER CKT 1'	287	0.037	103.45	'G11_012T 230.00 - HITCHLAND INTERCHANGE 230KV CKT 1'
12WP	00NR	2	'FROM->TO'	G11_049	'ELK CITY 230KV (ELKCTY-6) 230/138/13.8KV TRANSFORMER CKT 1'	287	0.037	102.92	'G11_012T 230.00 - HITCHLAND INTERCHANGE 230KV CKT 1'
13WP	00NR	2	'TO->FROM'	G11_049	'CEDARDALE - MOORELAND 138KV CKT 1'	214	0.036	104.33	'DBL-MATT-TAT'
13WP	00NR	2	'FROM->TO'	G11_049	'CEDARDALE - OKEENE 138KV CKT 1'	214	0.036	103.23	'DBL-MATT-TAT'
12WP	00NR	2	'FROM->TO'	G11_049	'ELK CITY 230KV (ELKCTY-6) 230/138/13.8KV TRANSFORMER CKT 1'	287	0.036	101.14	'BOWERS INTERCHANGE - GRAPEVINE INTERCHANGE 115KV CKT 1'
12WP	00NR	2	'FROM->TO'	G11_049	'ELK CITY 230KV (ELKCTY-6) 230/138/13.8KV TRANSFORMER CKT 1'	287	0.036	101.14	'BOWERS INTERCHANGE (NA 70456-A) 115/69/13.2KV TRANSFORMER CKT 1'
12WP	00NR	2	'FROM->TO'	G11_049	'ELK CITY 230KV (ELKCTY-6) 230/138/13.8KV TRANSFORMER CKT 1'	287	0.036	100.72	'BOWERS INTERCHANGE - GRAPEVINE INTERCHANGE 115KV CKT 1'
12WP	00NR	2	'FROM->TO'	G11_049	'ELK CITY 230KV (ELKCTY-6) 230/138/13.8KV TRANSFORMER CKT 1'	287	0.036	100.72	'BOWERS INTERCHANGE (NA 70456-A) 115/69/13.2KV TRANSFORMER CKT 1'
13WP	00NR	2	'FROM->TO'	G11_049	'ELK CITY 230KV (ELKCTY-6) 230/138/13.8KV TRANSFORMER CKT 1'	287	0.035	105.86	'POTTER COUNTY INTERCHANGE (WAUK 90343-A) 345/230/13.2KV TRANSFORMER CKT 1'
13WP	00NR	2	'FROM->TO'	G11_049	'ELK CITY 230KV (ELKCTY-6) 230/138/13.8KV TRANSFORMER CKT 1'	287	0.035	105.21	'POTTER COUNTY INTERCHANGE (WAUK 90343-A) 345/230/13.2KV TRANSFORMER CKT 1'
12WP	00NR	2	'FROM->TO'	G11_049	'ELK CITY 230KV (ELKCTY-6) 230/138/13.8KV TRANSFORMER CKT 1'	287	0.035	107.34	'POTTER COUNTY INTERCHANGE (WAUK 90343-A) 345/230/13.2KV TRANSFORMER CKT 1'
12WP	00NR	2	'FROM->TO'	G11_049	'ELK CITY 230KV (ELKCTY-6) 230/138/13.8KV TRANSFORMER CKT 1'	287	0.035	106.64	'POTTER COUNTY INTERCHANGE (WAUK 90343-A) 345/230/13.2KV TRANSFORMER CKT 1'
12WP	00NR	2	'FROM->TO'	G11_049	'CIMARRON - CZECH HALL 138KV CKT 1'	382	0.034	101.17	'CIMARRON - DRAPER LAKE 345KV CKT 1'
13WP	00NR	2	'FROM->TO'	G11_049	'CIMARRON - CZECH HALL 138KV CKT 1'	382	0.031	100.06	'CIMARRON - HAYMAKER 138KV CKT 1'
13WP	00NR	2	'TO->FROM'	G11_049	'CLINTON AIR FORCE BASE TAP - ELK CITY 138KV CKT 1'	192	0.031	101.14	'DBL-MATT-TAT'
13WP	00NR	2	'FROM->TO'	G11_049	'CLINTON AIR FORCE BASE TAP - HOBART JUNCTION 138KV CKT 1'	189	0.031	101.02	'DBL-MATT-TAT'
13WP	00NR	2	'FROM->TO'	G11_049	'HARPER - MILAN TAP 138KV CKT 1'	95.6	0.030	269.67	'DBL-WICH-THI'
13WP	00NR	2	'TO->FROM'	G11_049	'CLEARWATER - MILAN TAP 138KV CKT 1'	100	0.030	247.28	'DBL-WICH-THI'
12WP	00NR	2	'FROM->TO'	G11_049	'CIMARRON - CZECH HALL 138KV CKT 1'	382	0.030	102.13	'CIMARRON - HAYMAKER 138KV CKT 1'
12WP	00NR	2	'FROM->TO'	G11_049	'CIMARRON - CZECH HALL 138KV CKT 1'	382	0.030	100.68	'DIVISION AVE - HAYMAKER 138KV CKT 1'
13WP	00NR	2	'TO->FROM'	G11_049	'GLASS MOUNTAIN - MOORELAND 138KV CKT 1'	152	0.030	111.60	'DBL-THIS-WWR'
17WP	00NR	2	'TO->FROM'	G11_049	'GLASS MOUNTAIN - MOORELAND 138KV CKT 1'	152	0.030	107.35	'DBL-THIS-WWR'
17WP	00NR	2	'FROM->TO'	G11_049	'HARPER - MILAN TAP 138KV CKT 1'	95.6	0.030	258.59	'DBL-WICH-THI'
17WP	00NR	2	'TO->FROM'	G11_049	'CLEARWATER - MILAN TAP 138KV CKT 1'	100	0.030	236.55	'DBL-WICH-THI'
12SP	00NR	3	'FROM->TO'	G11_049	'MATTHEWSON 345.00 - NORTHWEST 345KV CKT 1'	1195	0.348	122.03	'DBL-MATT-CIM'
13SP	00NR	3	'FROM->TO'	G11_049	'MATTHEWSON 345.00 - NORTHWEST 345KV CKT 1'	1195	0.346	121.59	'DBL-MATT-CIM'
13WP	00NR	3	'FROM->TO'	G11_049	'MATTHEWSON 345.00 - NORTHWEST 345KV CKT 1'	1195	0.322	148.76	'DBL-MATT-CIM'
17WP	00NR	3	'FROM->TO'	G11_049	'MATTHEWSON 345.00 - NORTHWEST 345KV CKT 1'	1195	0.321	140.04	'DBL-MATT-CIM'
12WP	00NR	3	'FROM->TO'	G11_049	'MATTHEWSON 345.00 - NORTHWEST 345KV CKT 1'	1195	0.234	101.42	'CIMARRON - MATTHEWSON 345.00 345KV CKT 1'
13WP	00NR	3	'FROM->TO'	G11_049	'MATTHEWSON 345.00 - NORTHWEST 345KV CKT 1'	1195	0.232	101.59	'CIMARRON - MATTHEWSON 345.00 345KV CKT 1'
17WP	00NR	3	'FROM->TO'	G11_049	'GRAPEVINE INTERCHANGE - STATELINE INTERCHANGE 230KV CKT 1'	361	0.053	101.40	'LAWTON EASTSIDE - OKLAUNION 345KV CKT 1'
12WP	00NR	3	'FROM->TO'	G11_049	'GRAPEVINE INTERCHANGE - STATELINE INTERCHANGE 230KV CKT 1'	361	0.053	114.95	'LAWTON EASTSIDE - OKLAUNION 345KV CKT 1'
12WP	00NR	3	'FROM->TO'	G11_049	'GRAPEVINE INTERCHANGE - STATELINE INTERCHANGE 230KV CKT 1'	361	0.053	104.83	'G05-15T 345.00 - OKLAUNION 345KV CKT 1'
12WP	00NR	3	'FROM->TO'	G11_049	'GRAPEVINE INTERCHANGE - STATELINE INTERCHANGE 230KV CKT 1'	361	0.053	104.25	'G05-15T 345.00 - TUCO INTERCHANGE 345KV CKT 1'
13WP	00NR	3	'FROM->TO'	G11_049	'GRAPEVINE INTERCHANGE - STATELINE INTERCHANGE 230KV CKT 1'	361	0.053	113.48	'LAWTON EASTSIDE - OKLAUNION 345KV CKT 1'
13WP	00NR	3	'FROM->TO'	G11_049	'GRAPEVINE INTERCHANGE - STATELINE INTERCHANGE 230KV CKT 1'	361	0.053	103.55	'G05-15T 345.00 - OKLAUNION 345KV CKT 1'
13WP	00NR	3	'FROM->TO'	G11_049	'GRAPEVINE INTERCHANGE - STATELINE INTERCHANGE 230KV CKT 1'	361	0.053	103.00	'G05-15T 345.00 - TUCO INTERCHANGE 345KV CKT 1'
13WP	00NR	3	'FROM->TO'	G11_049	'CLEO CORNER - MEN TAP 138KV CKT 1'	191	0.051	133.43	'DBL-MATT-TAT'
17WP	00NR	3	'FROM->TO'	G11_049	'CLEO CORNER - MEN TAP 138KV CKT 1'	191	0.051	125.19	'DBL-MATT-TAT'
12SP	00NR	3	'FROM->TO'	G11_049	'CLEO CORNER - MEN TAP 138KV CKT 1'	191	0.051	109.71	'DBL-MATT-TAT'
13SP	00NR	3	'FROM->TO'	G11_049	'CLEO CORNER - MEN TAP 138KV CKT 1'	191	0.050	108.63	'DBL-MATT-TAT'
13WP	00NR	3	'FROM->TO'	G11_049	'GRAPEVINE INTERCHANGE - STATELINE INTERCHANGE 230KV CKT 1'	361	0.050	107.84	'DBL-MATT-TAT'
12SP	00NR	3	'TO->FROM'	G11_049	'ROMAN NOSE - SOUTHARD 138KV CKT 1'	153	0.048	124.47	'DBL-MATT-TAT'
13SP	00NR	3	'TO->FROM'	G11_049	'ROMAN NOSE - SOUTHARD 138KV CKT 1'	153	0.048	121.59	'DBL-MATT-TAT'
13WP	00NR	3	'TO->FROM'	G11_049	'ROMAN NOSE - SOUTHARD 138KV CKT 1'	185	0.046	125.68	'DBL-MATT-TAT'
17WP	00NR	3	'TO->FROM'	G11_049	'ROMAN NOSE - SOUTHARD 138KV CKT 1'	185	0.046	116.51	'DBL-MATT-TAT'
17WP	00NR	3	'TO->FROM'	G11_049	'GLASS MOUNTAIN - MOORELAND 138KV CKT 1'	152	0.044	156.32	'DBL-MATT-TAT'
17WP	00NR	3	'TO->FROM'	G11_049	'CLEO CORNER - GLASS MOUNTAIN 138KV CKT 1'	185	0.044	125.71	'DBL-MATT-TAT'
12SP	00NR	3	'TO->FROM'	G11_049	'GLASS MOUNTAIN - MOORELAND 138KV CKT 1'	152	0.044	142.77	'DBL-MATT-TAT'
12SP	00NR	3	'TO->FROM'	G11_049	'CLEO CORNER - GLASS MOUNTAIN 138KV CKT 1'	153	0.044	137.05	'DBL-MATT-TAT'
13WP	00NR	3	'TO->FROM'	G11_049	'GLASS MOUNTAIN - MOORELAND 138KV CKT 1'	152	0.044	164.87	'DBL-MATT-TAT'
13WP	00NR	3	'TO->FROM'	G11_049	'CLEO CORNER - GLASS MOUNTAIN 138KV CKT 1'	185	0.044	132.75	'DBL-MATT-TAT'
13SP	00NR	3	'TO->FROM'	G11_049	'GLASS MOUNTAIN - MOORELAND 138KV CKT 1'	152	0.044	141.63	'DBL-MATT-TAT'
13SP	00NR	3	'TO->FROM'	G11_049	'CLEO CORNER - GLASS MOUNTAIN 138KV CKT 1'	153	0.044	135.87	'DBL-MATT-TAT'
17WP	00NR	3	'TO->FROM'	G11_049	'DOVER SW - OKEENE 138KV CKT 1'	143	0.043	144.13	'DBL-MATT-TAT'
17WP	00NR	3	'TO->FROM'	G11_049	'CLINTON JUNCTION - ELK CITY 138KV CKT 1'	210	0.041	105.78	'DBL-MATT-TAT'
13WP	00NR	3	'TO->FROM'	G11_049	'CLINTON JUNCTION - ELK CITY 138KV CKT 1'	210	0.041	113.83	'DBL-MATT-TAT'
17WP	00NR	3	'TO->FROM'	G11_049	'CEDARDALE - MOORELAND 138KV CKT 1'	214	0.040	104.90	'DBL-MATT-TAT'
17WP	00NR	3	'FROM->TO'	G11_049	'CEDARDALE - OKEENE 138KV CKT 1'	214	0.040	103.72	'DBL-MATT-TAT'
13WP	00NR	3	'TO->FROM'	G11_049	'DOVER SW - OKEENE 138KV CKT 1'	143	0.038	139.73	'DBL-MATT-TAT'
12SP	00NR	3	'TO->FROM'	G11_049	'DOVER SW - OKEENE 138KV CKT 1'	130	0.038	123.10	'DBL-MATT-TAT'
13SP	00NR	3	'TO->FROM'	G11_049	'DOVER SW - OKEENE 138KV CKT 1'	130	0.037	123.43	'DBL-MATT-TAT'

SEASON	GROUP	SCENARIO	DIRECTION	SOURCE	MONITORED ELEMENT	RATE B (MVA)	TDF	(%MVA) LOADING	CONTINGENCY
12SP	00NR	3	'TO->FROM'	G11_049	'CEDARDALE - MOORELAND 138KV CKT 1'	179	0.037	108.09	'DBL-MATT-TAT'
12SP	00NR	3	'FROM->TO'	G11_049	'CEDARDALE - OKEENE 138KV CKT 1'	179	0.037	106.50	'DBL-MATT-TAT'
13SP	00NR	3	'TO->FROM'	G11_049	'CEDARDALE - MOORELAND 138KV CKT 1'	179	0.037	106.03	'DBL-MATT-TAT'
13SP	00NR	3	'FROM->TO'	G11_049	'CEDARDALE - OKEENE 138KV CKT 1'	179	0.037	104.44	'DBL-MATT-TAT'
13WP	00NR	3	'TO->FROM'	G11_049	'CEDARDALE - MOORELAND 138KV CKT 1'	214	0.036	104.28	'DBL-MATT-TAT'
13WP	00NR	3	'FROM->TO'	G11_049	'CEDARDALE - OKEENE 138KV CKT 1'	214	0.036	103.19	'DBL-MATT-TAT'
13WP	00NR	3	'FROM->TO'	G11_049	'MULGREN7 345.00 (MULLERG) 345/230/13.8KV TRANSFORMER CKT 1'	336	0.033	105.82	'DBL-SPRVL-MU'
13WP	00NR	3	'FROM->TO'	G11_049	'MULGREN7 345.00 (MULLERG) 345/230/13.8KV TRANSFORMER CKT 1'	336	0.033	104.41	'DBL-SPRVL-MU'
17WP	00NR	3	'FROM->TO'	G11_049	'MULGREN7 345.00 (MULLERG) 345/230/13.8KV TRANSFORMER CKT 1'	336	0.033	100.00	'DBL-SPRVL-MU'
13WP	00NR	3	'TO->FROM'	G11_049	'CLINTON AIR FORCE BASE TAP - ELK CITY 138KV CKT 1'	192	0.031	101.33	'DBL-MATT-TAT'
13WP	00NR	3	'FROM->TO'	G11_049	'CLINTON AIR FORCE BASE TAP - HOBART JUNCTION 138KV CKT 1'	189	0.031	101.22	'DBL-MATT-TAT'
13WP	00NR	3	'FROM->TO'	G11_049	'HARPER - MILAN TAP 138KV CKT 1'	95.6	0.030	269.07	'DBL-WICH-THI'
13WP	00NR	3	'TO->FROM'	G11_049	'CLEARWATER - MILAN TAP 138KV CKT 1'	100	0.030	246.70	'DBL-WICH-THI'
13WP	00NR	3	'TO->FROM'	G11_049	'GLASS MOUNTAIN - MOORELAND 138KV CKT 1'	152	0.030	111.50	'DBL-THIS-WWR'
17WP	00NR	3	'TO->FROM'	G11_049	'GLASS MOUNTAIN - MOORELAND 138KV CKT 1'	152	0.030	107.38	'DBL-THIS-WWR'
17WP	00NR	3	'FROM->TO'	G11_049	'HARPER - MILAN TAP 138KV CKT 1'	95.6	0.030	258.51	'DBL-WICH-THI'
17WP	00NR	3	'TO->FROM'	G11_049	'CLEARWATER - MILAN TAP 138KV CKT 1'	100	0.030	236.47	'DBL-WICH-THI'
13WP	00NR	0	'FROM->TO'	G11_050	'CIMARRON - DRAPER LAKE 345KV CKT 1'	717	0.094	121.69	'LAWTON EASTSIDE - SUNNYSIDE 345KV CKT 1'
12WP	00NR	0	'FROM->TO'	G11_050	'CIMARRON - DRAPER LAKE 345KV CKT 1'	717	0.094	117.18	'LAWTON EASTSIDE - SUNNYSIDE 345KV CKT 1'
17WP	00NR	0	'FROM->TO'	G11_050	'CIMARRON - DRAPER LAKE 345KV CKT 1'	717	0.091	109.96	'LAWTON EASTSIDE - SUNNYSIDE 345KV CKT 1'
13WP	00NR	0	'FROM->TO'	G11_050	'CORN TAP - PAOLI 138KV CKT 1'	143	0.082	100.25	'LAWTON EASTSIDE - SUNNYSIDE 345KV CKT 1'
12WP	00NR	0	'FROM->TO'	G11_050	'CORN TAP - PAOLI 138KV CKT 1'	143	0.082	101.34	'LAWTON EASTSIDE - SUNNYSIDE 345KV CKT 1'
12WP	00NR	0	'FROM->TO'	G11_050	'CIMARRON - DRAPER LAKE 345KV CKT 1'	717	0.072	112.50	'ARCADIA - NORTHWEST 345KV CKT 1'
13WP	00NR	0	'FROM->TO'	G11_050	'CIMARRON - DRAPER LAKE 345KV CKT 1'	717	0.071	117.35	'ARCADIA - NORTHWEST 345KV CKT 1'
17WP	00NR	0	'FROM->TO'	G11_050	'CIMARRON - DRAPER LAKE 345KV CKT 1'	717	0.067	104.47	'ARCADIA - NORTHWEST 345KV CKT 1'
13WP	00NR	0	'FROM->TO'	G11_050	'CIMARRON - DRAPER LAKE 345KV CKT 1'	717	0.067	103.37	'BLANCHARD - CORNVILLE 138KV CKT 1'
13WP	00NR	0	'FROM->TO'	G11_050	'CIMARRON - DRAPER LAKE 345KV CKT 1'	717	0.067	103.17	'BLANCHARD - MAUD 138KV CKT 1'
12WP	00NR	0	'TO->FROM'	G11_050	'COMANCHE - COMANCHE TAP 69KV CKT 1'	48	0.066	103.35	'ANADARKO - GEORGIA 138KV CKT 1'
12WP	00NR	0	'TO->FROM'	G11_050	'COMANCHE - COMANCHE TAP 69KV CKT 1'	48	0.066	101.05	'FLETCHER - GEORGIA 138KV CKT 1'
12WP	00NR	0	'FROM->TO'	G11_050	'DUNCAN - TOSCO 69KV CKT 1'	53	0.066	100.89	'ANADARKO - GEORGIA 138KV CKT 1'
12WP	00NR	0	'FROM->TO'	G11_050	'CIMARRON - DRAPER LAKE 345KV CKT 1'	717	0.065	109.18	'CLEVELAND - SOONER 345KV CKT 1'
13WP	00NR	0	'FROM->TO'	G11_050	'CIMARRON - DRAPER LAKE 345KV CKT 1'	717	0.065	113.22	'CLEVELAND - SOONER 345KV CKT 1'
12WP	00NR	0	'TO->FROM'	G11_050	'COMANCHE - COMANCHE TAP 69KV CKT 1'	48	0.065	100.95	'EMPIRE - FLETCHER 138KV CKT 1'
13WP	00NR	0	'FROM->TO'	G11_050	'CIMARRON - DRAPER LAKE 345KV CKT 1'	717	0.063	104.53	'CIMARRON - NORTHWEST 345KV CKT 1'
12WP	00NR	0	'FROM->TO'	G11_050	'CIMARRON - DRAPER LAKE 345KV CKT 1'	717	0.063	100.18	'CIMARRON - NORTHWEST 345KV CKT 1'
13WP	00NR	0	'FROM->TO'	G11_050	'CIMARRON - DRAPER LAKE 345KV CKT 1'	717	0.063	103.55	'SUNSHINE CANYON - WESTMOORE 138KV CKT 1'
13WP	00NR	0	'FROM->TO'	G11_050	'CIMARRON - DRAPER LAKE 345KV CKT 1'	717	0.063	102.92	'FRANKLIN SW - WESTMOORE 138KV CKT 1'
17WP	00NR	0	'FROM->TO'	G11_050	'CIMARRON - DRAPER LAKE 345KV CKT 1'	717	0.062	103.17	'CLEVELAND - SOONER 345KV CKT 1'
13WP	00NR	0	'FROM->TO'	G11_050	'CIMARRON - DRAPER LAKE 345KV CKT 1'	717	0.062	105.06	'ANADARKO - POCASSETT 138KV CKT 1'
13WP	00NR	0	'FROM->TO'	G11_050	'CIMARRON - DRAPER LAKE 345KV CKT 1'	717	0.062	104.88	'POCASSETT - TUTTLE 138KV CKT 1'
13WP	00NR	0	'FROM->TO'	G11_050	'CIMARRON - DRAPER LAKE 345KV CKT 1'	717	0.062	104.44	'SUNSHINE CANYON - TUTTLE 138KV CKT 1'
12WP	00NR	0	'FROM->TO'	G11_050	'CIMARRON - DRAPER LAKE 345KV CKT 1'	717	0.062	104.28	'CLEVELAND - TULSA NORTH 345KV CKT 1'
12WP	00NR	0	'FROM->TO'	G11_050	'CIMARRON - DRAPER LAKE 345KV CKT 1'	717	0.061	100.97	'ANADARKO - POCASSETT 138KV CKT 1'
12WP	00NR	0	'FROM->TO'	G11_050	'CIMARRON - DRAPER LAKE 345KV CKT 1'	717	0.061	100.79	'POCASSETT - TUTTLE 138KV CKT 1'
12WP	00NR	0	'FROM->TO'	G11_050	'CIMARRON - DRAPER LAKE 345KV CKT 1'	717	0.061	100.35	'SUNSHINE CANYON - TUTTLE 138KV CKT 1'
13WP	00NR	0	'FROM->TO'	G11_050	'CIMARRON - DRAPER LAKE 345KV CKT 1'	717	0.061	108.44	'CLEVELAND - TULSA NORTH 345KV CKT 1'
13WP	00NR	0	'FROM->TO'	G11_050	'CIMARRON - DRAPER LAKE 345KV CKT 1'	717	0.060	103.06	'JOHNSON COUNTY - PITTSBURG 345KV CKT 1'
13WP	00NR	0	'FROM->TO'	G11_050	'CIMARRON - DRAPER LAKE 345KV CKT 1'	717	0.058	103.54	'CORN TAP - PAOLI 138KV CKT 1'
12WP	00NR	0	'FROM->TO'	G11_050	'CIMARRON - DRAPER LAKE 345KV CKT 1'	717	0.058	100.00	'JOHNSON COUNTY - SUNNYSIDE 345KV CKT 1'
13WP	00NR	0	'FROM->TO'	G11_050	'CIMARRON - DRAPER LAKE 345KV CKT 1'	717	0.058	104.56	'JOHNSON COUNTY - SUNNYSIDE 345KV CKT 1'
12WP	00NR	0	'FROM->TO'	G11_050	'CIMARRON - DRAPER LAKE 345KV CKT 1'	717	0.058	100.63	'REDBUD - RIVERSIDE STATION 345KV CKT 1'
13WP	00NR	0	'FROM->TO'	G11_050	'CIMARRON - DRAPER LAKE 345KV CKT 1'	717	0.057	104.83	'REDBUD - RIVERSIDE STATION 345KV CKT 1'
13WP	00NR	0	'FROM->TO'	G11_050	'CIMARRON - DRAPER LAKE 345KV CKT 1'	717	0.057	100.09	'FRANKLIN SW - MIDWEST TAP 138KV CKT 1'
13WP	00NR	0	'FROM->TO'	G11_050	'CIMARRON - DRAPER LAKE 345KV CKT 1'	717	0.057	102.98	'CIVIT - PAOLI 138KV CKT 1'
13WP	00NR	0	'FROM->TO'	G11_050	'CIMARRON - DRAPER LAKE 345KV CKT 1'	717	0.057	102.93	'CIVIT - STRATFORD 138KV CKT 1'
13WP	00NR	0	'FROM->TO'	G11_050	'CIMARRON - DRAPER LAKE 345KV CKT 1'	717	0.057	102.87	'OIL CENTER - STRATFORD 138KV CKT 1'
13WP	00NR	0	'FROM->TO'	G11_050	'CIMARRON - DRAPER LAKE 345KV CKT 1'	717	0.057	102.80	'LATTA JCT - OIL CENTER 138KV CKT 1'
13WP	00NR	0	'FROM->TO'	G11_050	'CIMARRON - DRAPER LAKE 345KV CKT 1'	717	0.056	106.85	'CIMARRON - CZECH HALL 138KV CKT 1'
13WP	00NR	0	'FROM->TO'	G11_050	'CIMARRON - DRAPER LAKE 345KV CKT 1'	717	0.056	106.40	'CZECH HALL - XEROX 138KV CKT 1'
13WP	00NR	0	'FROM->TO'	G11_050	'CIMARRON - DRAPER LAKE 345KV CKT 1'	717	0.056	106.38	'MORGAN - XEROX 138KV CKT 1'
13WP	00NR	0	'FROM->TO'	G11_050	'CIMARRON - DRAPER LAKE 345KV CKT 1'	717	0.056	106.33	'MORGAN - MUSTANG 138KV CKT 1'
12WP	00NR	0	'FROM->TO'	G11_050	'CIMARRON - DRAPER LAKE 345KV CKT 1'	717	0.056	102.84	'CIMARRON - CZECH HALL 138KV CKT 1'
12WP	00NR	0	'FROM->TO'	G11_050	'CIMARRON - DRAPER LAKE 345KV CKT 1'	717	0.056	102.39	'CZECH HALL - XEROX 138KV CKT 1'
12WP	00NR	0	'FROM->TO'	G11_050	'CIMARRON - DRAPER LAKE 345KV CKT 1'	717	0.056	102.37	'MORGAN - XEROX 138KV CKT 1'
12WP	00NR	0	'FROM->TO'	G11_050	'CIMARRON - DRAPER LAKE 345KV CKT 1'	717	0.056	102.26	'MORGAN - MUSTANG 138KV CKT 1'
13WP	00NR	0	'FROM->TO'	G11_050	'CIMARRON - DRAPER LAKE 345KV CKT 1'	717	0.056	103.64	'HUGO - SUNNYSIDE 345KV CKT 1'
13WP	00NR	0	'FROM->TO'	G11_050	'CIMARRON - DRAPER LAKE 345KV CKT 1'	717	0.056	103.94	'SOONER - WOODRING 345KV CKT 1'
13WP	00NR	0	'FROM->TO'	G11_050	'CIMARRON - DRAPER LAKE 345KV CKT 1'	717	0.055	107.46	'CIMARRON - SARA 138KV CKT 1'
13WP	00NR	0	'FROM->TO'	G11_050	'CIMARRON - DRAPER LAKE 345KV CKT 1'	717	0.055	106.37	'MCCLAIN - SARA 138KV CKT 1'
12WP	00NR	0	'FROM->TO'	G11_050	'CIMARRON - DRAPER LAKE 345KV CKT 1'	717	0.055	104.13	'CIMARRON - SARA 138KV CKT 1'
12WP	00NR	0	'FROM->TO'	G11_050	'CIMARRON - DRAPER LAKE 345KV CKT 1'	717	0.055	102.88	'MCCLAIN - SARA 138KV CKT 1'
13WP	00NR	0	'FROM->TO'	G11_050	'CIMARRON - DRAPER LAKE 345KV CKT 1'	717	0.055	102.75	'HEALDTON - LOCO 138KV CKT 1'
13WP	00NR	0	'FROM->TO'	G11_050	'CIMARRON - DRAPER LAKE 345KV CKT 1'	717	0.055	105.74	'DBL-THIS-WWR'
13WP	00NR	0	'FROM->TO'	G11_050	'CIMARRON - DRAPER LAKE 345KV CKT 1'	717	0.055	103.31	'7SAREPT 345.00 - LONGWOOD 345KV CKT 1'
13WP	00NR	0	'FROM->TO'	G11_050	'CIMARRON - DRAPER LAKE 345KV CKT 1'	717	0.055	103.23	'HUGO - VALLIANT 345KV CKT 1'
13WP	00NR	0	'FROM->TO'	G11_050	'CIMARRON - DRAPER LAKE 345KV CKT 1'	717	0.054	103.58	'CIMARRON - HAYMAKER 138KV CKT 1'
13WP	00NR	0	'FROM->TO'	G11_050	'CIMARRON - DRAPER LAKE 345KV CKT 1'	717	0.054	103.44	'DIVISION AVE - HAYMAKER 138KV CKT 1'
13WP	00NR	0	'FROM->TO'	G11_050	'CIMARRON - DRAPER LAKE 345KV CKT 1'	717	0.054	110.42	'MATTHEWSON 345.00 - NORTHWEST 345KV CKT 1'

SEASON	GROUP	SCENARIO	DIRECTION	SOURCE	MONITORED ELEMENT	RATE B (MVA)	TDF	(%MVA) LOADING	CONTINGENCY
12WP	00NR	0	'FROM->TO'	G11_050	'CIMARRON - DRAPER LAKE 345KV CKT 1'	717	0.054	106.21	'MATTHEWSON 345.00 - NORTHWEST 345KV CKT 1'
13WP	00NR	0	'FROM->TO'	G11_050	'CIMARRON - DRAPER LAKE 345KV CKT 1'	717	0.054	101.19	'MAUD - SEMINOLE 138KV CKT 1'
13WP	00NR	0	'FROM->TO'	G11_050	'CIMARRON - DRAPER LAKE 345KV CKT 1'	717	0.054	105.18	'CANEYRV7 345.00 - NEOSHO 345KV CKT 1'
13WP	00NR	0	'FROM->TO'	G11_050	'CIMARRON - DRAPER LAKE 345KV CKT 1'	717	0.054	105.04	'CANEYRV7 345.00 - LATHAMS7 345.00 345KV CKT 1'
13WP	00NR	0	'FROM->TO'	G11_050	'CIMARRON - DRAPER LAKE 345KV CKT 1'	717	0.054	104.54	'LATHAMS7 345.00 - ROSE HILL 345KV CKT 1'
13WP	00NR	0	'FROM->TO'	G11_050	'CIMARRON - DRAPER LAKE 345KV CKT 1'	717	0.054	103.02	'COMANCHE - LOCO 138KV CKT 1'
13WP	00NR	0	'FROM->TO'	G11_050	'CIMARRON - DRAPER LAKE 345KV CKT 1'	717	0.054	101.25	'SEMINOLE (SEMINOL1) 345/138/14.4KV TRANSFORMER CKT 1'
13WP	00NR	0	'FROM->TO'	G11_050	'CIMARRON - DRAPER LAKE 345KV CKT 1'	717	0.054	101.26	'SEMINOLE (SEMINOL2) 345/138/14.4KV TRANSFORMER CKT 1'
12WP	00NR	0	'FROM->TO'	G11_050	'CIMARRON - DRAPER LAKE 345KV CKT 1'	717	0.054	100.96	'CANEYRV7 345.00 - NEOSHO 345KV CKT 1'
12WP	00NR	0	'FROM->TO'	G11_050	'CIMARRON - DRAPER LAKE 345KV CKT 1'	717	0.054	100.82	'CANEYRV7 345.00 - LATHAMS7 345.00 345KV CKT 1'
12WP	00NR	0	'FROM->TO'	G11_050	'CIMARRON - DRAPER LAKE 345KV CKT 1'	717	0.054	100.35	'LATHAMS7 345.00 - ROSE HILL 345KV CKT 1'
13WP	00NR	0	'FROM->TO'	G11_050	'CIMARRON - DRAPER LAKE 345KV CKT 1'	717	0.054	100.16	'G08-13T 345.00 - SUMNERCO 345.00 345KV CKT 1'
13WP	00NR	0	'FROM->TO'	G11_050	'CIMARRON - DRAPER LAKE 345KV CKT 1'	717	0.054	102.74	'ANADARKO - BLANCHARD 69KV CKT 1'
13WP	00NR	0	'FROM->TO'	G11_050	'CIMARRON - DRAPER LAKE 345KV CKT 1'	717	0.054	100.95	'OGE3TERM22'
13WP	00NR	0	'FROM->TO'	G11_050	'CIMARRON - DRAPER LAKE 345KV CKT 1'	717	0.054	103.30	'A222'
13WP	00NR	0	'FROM->TO'	G11_050	'CIMARRON - DRAPER LAKE 345KV CKT 1'	717	0.054	103.30	'7SAREPT 345.00 - ELDORADO EHV 345KV CKT 1'
13WP	00NR	0	'FROM->TO'	G11_050	'CIMARRON - DRAPER LAKE 345KV CKT 1'	717	0.054	103.28	'ELDORADO EHV 500/345KV TRANSFORMER CKT 1'
13WP	00NR	0	'FROM->TO'	G11_050	'CIMARRON - DRAPER LAKE 345KV CKT 1'	717	0.054	100.96	'DRAPER LAKE - SOONER TAP 138KV CKT 1'
13WP	00NR	0	'FROM->TO'	G11_050	'CIMARRON - DRAPER LAKE 345KV CKT 1'	717	0.054	100.87	'OAKCREEK - WILD MARY 138KV CKT 1'
13WP	00NR	0	'FROM->TO'	G11_050	'CIMARRON - DRAPER LAKE 345KV CKT 1'	717	0.054	100.61	'AIRDEPT4 138.00 - WILD MARY 138KV CKT 1'
13WP	00NR	0	'FROM->TO'	G11_050	'CIMARRON - DRAPER LAKE 345KV CKT 1'	717	0.054	100.61	'AIRDEPT4 138.00 - GM 138KV CKT 1'
13WP	00NR	0	'FROM->TO'	G11_050	'CIMARRON - DRAPER LAKE 345KV CKT 1'	717	0.054	100.35	'DRAPER LAKE - GM 138KV CKT 1'
13WP	00NR	0	'FROM->TO'	G11_050	'CIMARRON - DRAPER LAKE 345KV CKT 1'	717	0.053	101.68	'OSAGE - WEBB CITY TAP 138KV CKT 1'
13WP	00NR	0	'FROM->TO'	G11_050	'CIMARRON - DRAPER LAKE 345KV CKT 1'	717	0.053	101.50	'FAIRFAX TAP - WEBB CITY TAP 138KV CKT 1'
13WP	00NR	0	'FROM->TO'	G11_050	'CIMARRON - DRAPER LAKE 345KV CKT 1'	717	0.053	114.08	'ARCADIA - HORSESHOE LAKE 345KV CKT 1'
13WP	00NR	0	'FROM->TO'	G11_050	'CIMARRON - DRAPER LAKE 345KV CKT 1'	717	0.053	114.05	'HORSESHOE LAKE - SEMINOLE 345KV CKT 1'
12WP	00NR	0	'FROM->TO'	G11_050	'CIMARRON - DRAPER LAKE 345KV CKT 1'	717	0.053	102.04	'DBL-WICH-THI'
13WP	00NR	0	'FROM->TO'	G11_050	'CIMARRON - DRAPER LAKE 345KV CKT 1'	717	0.053	101.56	'DELAWARE - NORTHEAST STATION 345KV CKT 1'
13WP	00NR	0	'FROM->TO'	G11_050	'CIMARRON - DRAPER LAKE 345KV CKT 1'	717	0.053	101.77	'CROCKETT - GRIMES 345KV CKT 1'
13WP	00NR	0	'FROM->TO'	G11_050	'CIMARRON - DRAPER LAKE 345KV CKT 1'	717	0.053	103.16	'THISTLE 7 345.00 - WOODWARD DISTRICT EHV 345KV CKT 1'
13WP	00NR	0	'FROM->TO'	G11_050	'CIMARRON - DRAPER LAKE 345KV CKT 1'	717	0.053	103.16	'THISTLE 7 345.00 - WOODWARD DISTRICT EHV 345KV CKT 2'
13WP	00NR	0	'FROM->TO'	G11_050	'CIMARRON - DRAPER LAKE 345KV CKT 1'	717	0.053	103.25	'FAIRFAX TAP - SHIDLER 138KV CKT 1'
13WP	00NR	0	'FROM->TO'	G11_050	'CIMARRON - DRAPER LAKE 345KV CKT 1'	717	0.053	103.21	'SHIDLER - WEST PAWHUSKA 138KV CKT 1'
13WP	00NR	0	'FROM->TO'	G11_050	'CIMARRON - DRAPER LAKE 345KV CKT 1'	717	0.053	103.21	'PAWHUSKA TAP - WEST PAWHUSKA 138KV CKT 1'
13WP	00NR	0	'FROM->TO'	G11_050	'CIMARRON - DRAPER LAKE 345KV CKT 1'	717	0.053	103.16	'DOMES - PAWHUSKA TAP 138KV CKT 1'
13WP	00NR	0	'FROM->TO'	G11_050	'CIMARRON - DRAPER LAKE 345KV CKT 1'	717	0.053	103.13	'DOMES - MOUND ROAD 138KV CKT 1'
13WP	00NR	0	'FROM->TO'	G11_050	'CIMARRON - DRAPER LAKE 345KV CKT 1'	717	0.053	102.75	'PENNSYLVANIA - SANTA FE 138KV CKT 1'
13WP	00NR	0	'FROM->TO'	G11_050	'CIMARRON - DRAPER LAKE 345KV CKT 1'	717	0.053	105.38	'ANDERSONCO 345.00 - LACYGNE 345KV CKT 1'
13WP	00NR	0	'FROM->TO'	G11_050	'CIMARRON - DRAPER LAKE 345KV CKT 1'	717	0.053	105.27	'ANDERSONCO 345.00 - WOLF CREEK 345KV CKT 1'
13WP	00NR	0	'FROM->TO'	G11_050	'CIMARRON - DRAPER LAKE 345KV CKT 1'	717	0.053	103.07	'HOLLYWOOD - PLEASANT VALLEY 138KV CKT 1'
13WP	00NR	0	'FROM->TO'	G11_050	'CIMARRON - DRAPER LAKE 345KV CKT 1'	717	0.053	103.36	'CLASSEN - ROBINSON 138KV CKT 1'
13WP	00NR	0	'FROM->TO'	G11_050	'CIMARRON - DRAPER LAKE 345KV CKT 1'	717	0.053	102.94	'LIGHTNING CREEK - ROBINSON 138KV CKT 1'
13WP	00NR	0	'FROM->TO'	G11_050	'CIMARRON - DRAPER LAKE 345KV CKT 1'	717	0.053	102.78	'LIGHTNING CREEK - TROSPER 138KV CKT 1'
13WP	00NR	0	'FROM->TO'	G11_050	'CIMARRON - DRAPER LAKE 345KV CKT 1'	717	0.053	103.77	'BENTON - WICHITA 345KV CKT 1'
13WP	00NR	0	'FROM->TO'	G11_050	'CIMARRON - DRAPER LAKE 345KV CKT 1'	717	0.053	103.25	'MINGO - RED WILLOW 345KV CKT 1'
13WP	00NR	0	'FROM->TO'	G11_050	'CIMARRON - DRAPER LAKE 345KV CKT 1'	717	0.053	103.98	'OGE3TERM47'
13WP	00NR	0	'FROM->TO'	G11_050	'CIMARRON - DRAPER LAKE 345KV CKT 1'	717	0.053	102.91	'HAMMETT TAP - HORSESHOE LAKE 138KV CKT 1'
13WP	00NR	0	'FROM->TO'	G11_050	'CIMARRON - DRAPER LAKE 345KV CKT 1'	717	0.053	103.35	'EMPORIA ENERGY CENTER - WICHITA 345KV CKT 1'
13WP	00NR	0	'FROM->TO'	G11_050	'CIMARRON - DRAPER LAKE 345KV CKT 1'	717	0.053	103.97	'MCCLAIN - PLEASANT VALLEY 138KV CKT 1'
12WP	00NR	0	'FROM->TO'	G11_050	'CIMARRON - DRAPER LAKE 345KV CKT 1'	717	0.053	101.12	'ANDERSONCO 345.00 - LACYGNE 345KV CKT 1'
12WP	00NR	0	'FROM->TO'	G11_050	'CIMARRON - DRAPER LAKE 345KV CKT 1'	717	0.053	101.01	'ANDERSONCO 345.00 - WOLF CREEK 345KV CKT 1'
13WP	00NR	0	'FROM->TO'	G11_050	'CIMARRON - DRAPER LAKE 345KV CKT 1'	717	0.053	103.28	'KETCH TAP - NORTHWEST 138KV CKT 1'
13WP	00NR	0	'FROM->TO'	G11_050	'CIMARRON - DRAPER LAKE 345KV CKT 1'	717	0.053	103.22	'MINGO - SETAB 345KV CKT 1'
13WP	00NR	0	'FROM->TO'	G11_050	'CIMARRON - DRAPER LAKE 345KV CKT 1'	717	0.053	103.93	'AXTELL - POST ROCK 345KV CKT 1'
13WP	00NR	0	'FROM->TO'	G11_050	'CIMARRON - DRAPER LAKE 345KV CKT 1'	717	0.053	102.68	'DBL-FINY-HOL'
13WP	00NR	0	'FROM->TO'	G11_050	'CIMARRON - DRAPER LAKE 345KV CKT 1'	717	0.053	101.73	'ARCADIA - OMPA-EDMOND AIR DEPOT (PLANNED 2007) 138KV CKT 1'
13WP	00NR	0	'FROM->TO'	G11_050	'CIMARRON - DRAPER LAKE 345KV CKT 1'	717	0.053	101.63	'LEBROCK - TENASKA RUSK COUNTY 345KV CKT 1'
13WP	00NR	0	'FROM->TO'	G11_050	'CIMARRON - DRAPER LAKE 345KV CKT 1'	717	0.053	101.63	'CROCKETT - TENASKA RUSK COUNTY 345KV CKT 1'
13WP	00NR	0	'FROM->TO'	G11_050	'CIMARRON - DRAPER LAKE 345KV CKT 1'	717	0.053	103.21	'DIVISION AVE - LAKESIDE 138KV CKT 1'
13WP	00NR	0	'FROM->TO'	G11_050	'CIMARRON - DRAPER LAKE 345KV CKT 1'	717	0.053	103.08	'HEFNER - LAKESIDE 138KV CKT 1'
13WP	00NR	0	'FROM->TO'	G11_050	'CIMARRON - DRAPER LAKE 345KV CKT 1'	717	0.053	103.30	'OGE3TERM11'
13WP	00NR	0	'FROM->TO'	G11_050	'CIMARRON - DRAPER LAKE 345KV CKT 1'	717	0.053	103.18	'OVERTON-TRF'
13WP	00NR	0	'FROM->TO'	G11_050	'CIMARRON - DRAPER LAKE 345KV CKT 1'	717	0.053	103.55	'LACYGNE - NEOSHO 345KV CKT 1'
13WP	00NR	0	'FROM->TO'	G11_050	'CIMARRON - DRAPER LAKE 345KV CKT 1'	717	0.053	103.25	'7OVERTON 345.00 - SIBLEY 345KV CKT 1'
13WP	00NR	0	'FROM->TO'	G11_050	'CIMARRON - DRAPER LAKE 345KV CKT 1'	717	0.053	103.58	'QUAIL CREEK - SKYLINE 138KV CKT 1'
12WP	00NR	0	'FROM->TO'	G11_050	'CIMARRON - DRAPER LAKE 345KV CKT 1'	717	0.053	108.82	'ARCADIA - HORSESHOE LAKE 345KV CKT 1'
12WP	00NR	0	'FROM->TO'	G11_050	'CIMARRON - DRAPER LAKE 345KV CKT 1'	717	0.053	108.82	'HORSESHOE LAKE - SEMINOLE 345KV CKT 1'
13WP	00NR	0	'FROM->TO'	G11_050	'CIMARRON - DRAPER LAKE 345KV CKT 1'	717	0.053	103.62	'BLACKBERRY - NEOSHO 345KV CKT 1'
13WP	00NR	0	'FROM->TO'	G11_050	'CIMARRON - DRAPER LAKE 345KV CKT 1'	717	0.053	102.88	'HOLCOMB - SETAB 345KV CKT 1'
13WP	00NR	0	'FROM->TO'	G11_050	'CIMARRON - DRAPER LAKE 345KV CKT 1'	717	0.053	103.03	'DOLET HILLS - SOUTHWEST SHREVEPORT 345KV CKT 1'
13WP	00NR	0	'FROM->TO'	G11_050	'CIMARRON - DRAPER LAKE 345KV CKT 1'	717	0.053	101.43	'DOLET HILLS 345/230KV TRANSFORMER CKT 1'
13WP	00NR	0	'FROM->TO'	G11_050	'CIMARRON - DRAPER LAKE 345KV CKT 1'	717	0.053	103.26	'SWISSVALE - WEST GARDNER 345KV CKT 1'
13WP	00NR	0	'FROM->TO'	G11_050	'CIMARRON - DRAPER LAKE 345KV CKT 1'	717	0.053	102.93	'WEBRE - WELLS 500KV CKT 1'
13WP	00NR	0	'FROM->TO'	G11_050	'CIMARRON - DRAPER LAKE 345KV CKT 1'	717	0.053	103.74	'G11-17T 345.00 - POST ROCK 345KV CKT 1'
13WP	00NR	0	'FROM->TO'	G11_050	'CIMARRON - DRAPER LAKE 345KV CKT 1'	717	0.053	102.98	'ELDORADO EHV - SHERIDAN EHV 500KV CKT 1'
13WP	00NR	0	'FROM->TO'	G11_050	'CIMARRON - DRAPER LAKE 345KV CKT 1'	717	0.052	102.99	'EMPORIA ENERGY CENTER - SWISSVALE 345KV CKT 1'
13WP	00NR	0	'FROM->TO'	G11_050	'CIMARRON - DRAPER LAKE 345KV CKT 1'	717	0.052	103.73	'WRTOD400'
13WP	00NR	0	'FROM->TO'	G11_050	'CIMARRON - DRAPER LAKE 345KV CKT 1'	717	0.052	102.59	'COUNCIL - MUSTANG 138KV CKT 1'

SEASON	GROUP	SCENARIO	DIRECTION	SOURCE	MONITORED ELEMENT	RATE B (MVA)	TDF	(%MVA) LOADING	CONTINGENCY
13WP	00NR	0	'FROM->TO'	G11_050	'CIMARRON - DRAPER LAKE 345KV CKT 1'	717	0.052	103.64	'HOYT - JEFFREY ENERGY CENTER 345KV CKT 1'
13WP	00NR	0	'FROM->TO'	G11_050	'CIMARRON - DRAPER LAKE 345KV CKT 1'	717	0.052	103.44	'HOYT - STRANGER CREEK 345KV CKT 1'
13WP	00NR	0	'FROM->TO'	G11_050	'CIMARRON - DRAPER LAKE 345KV CKT 1'	717	0.052	101.56	'HOLLYWOOD - MIDWEST TAP 138KV CKT 1'
13WP	00NR	0	'FROM->TO'	G11_050	'CIMARRON - DRAPER LAKE 345KV CKT 1'	717	0.052	103.93	'MORISNT4 138.00 - STILLWATER 138KV CKT 1'
13WP	00NR	0	'FROM->TO'	G11_050	'CIMARRON - DRAPER LAKE 345KV CKT 1'	717	0.052	103.09	'THISTLE 7 345.00 - WICHITA 345KV CKT 1'
13WP	00NR	0	'FROM->TO'	G11_050	'CIMARRON - DRAPER LAKE 345KV CKT 1'	717	0.052	103.09	'THISTLE 7 345.00 - WICHITA 345KV CKT 2'
13WP	00NR	0	'FROM->TO'	G11_050	'CIMARRON - DRAPER LAKE 345KV CKT 1'	717	0.052	102.82	'RENO COUNTY - SUMMIT 345KV CKT 1'
13WP	00NR	0	'FROM->TO'	G11_050	'CIMARRON - DRAPER LAKE 345KV CKT 1'	717	0.052	103.02	'CLEVELAND (CLVAUTO1) 345/138/13.8KV TRANSFORMER CKT 1'
13WP	00NR	0	'FROM->TO'	G11_050	'CIMARRON - DRAPER LAKE 345KV CKT 1'	717	0.052	102.84	'DAYTON - MUSTANG 138KV CKT 1'
13WP	00NR	0	'FROM->TO'	G11_050	'CIMARRON - DRAPER LAKE 345KV CKT 1'	717	0.052	102.83	'DAYTON - HOBBY LOBBY 138KV CKT 1'
13WP	00NR	0	'FROM->TO'	G11_050	'CIMARRON - DRAPER LAKE 345KV CKT 1'	717	0.052	102.78	'36 & MERIDIAN - HOBBY LOBBY 138KV CKT 1'
13WP	00NR	0	'FROM->TO'	G11_050	'CIMARRON - DRAPER LAKE 345KV CKT 1'	717	0.052	101.19	'PARK LANE - SEMINOLE 138KV CKT 1'
13WP	00NR	0	'FROM->TO'	G11_050	'CIMARRON - DRAPER LAKE 345KV CKT 1'	717	0.052	101.56	'OGE3TERM33'
13WP	00NR	0	'FROM->TO'	G11_050	'CIMARRON - DRAPER LAKE 345KV CKT 1'	717	0.052	103.39	'OGE3TERM18'
13WP	00NR	0	'FROM->TO'	G11_050	'CIMARRON - DRAPER LAKE 345KV CKT 1'	717	0.052	101.40	'KEO EHV - WEST MEMPHIS 500 500KV CKT 1'
13WP	00NR	0	'FROM->TO'	G11_050	'CIMARRON - DRAPER LAKE 345KV CKT 1'	717	0.052	102.73	'LAKEOVER - MCADAMS 500KV CKT 1'
13WP	00NR	0	'FROM->TO'	G11_050	'CIMARRON - DRAPER LAKE 345KV CKT 1'	717	0.052	101.77	'ROSE HILL - WOLF CREEK 345KV CKT 1'
13WP	00NR	0	'FROM->TO'	G11_050	'CIMARRON - DRAPER LAKE 345KV CKT 1'	717	0.052	101.71	'ARBUCKLE - VANOSS 138KV CKT 1'
13WP	00NR	0	'FROM->TO'	G11_050	'CIMARRON - DRAPER LAKE 345KV CKT 1'	717	0.052	103.25	'DBL-CIR-RENO'
13WP	00NR	0	'FROM->TO'	G11_050	'CIMARRON - DRAPER LAKE 345KV CKT 1'	717	0.052	103.24	'DBL-MULG-CIR'
13WP	00NR	0	'FROM->TO'	G11_050	'CIMARRON - DRAPER LAKE 345KV CKT 1'	717	0.052	103.21	'DBL-SPRVL-MU'
13WP	00NR	0	'FROM->TO'	G11_050	'CIMARRON - DRAPER LAKE 345KV CKT 1'	717	0.052	101.09	'BEAVER CO 345.00 - WOODWARD DISTRICT EHV 345KV CKT 1'
13WP	00NR	0	'FROM->TO'	G11_050	'CIMARRON - DRAPER LAKE 345KV CKT 1'	717	0.052	102.98	'7JASPER 345.00 - MORGAN 345KV CKT 1'
13WP	00NR	0	'FROM->TO'	G11_050	'CIMARRON - DRAPER LAKE 345KV CKT 1'	717	0.052	101.72	'8BHAM STEEL 500.00 - WEST MEMPHIS 500 500KV CKT 1'
13WP	00NR	0	'FROM->TO'	G11_050	'CIMARRON - DRAPER LAKE 345KV CKT 1'	717	0.052	101.71	'AMRN_OUTS5'
13WP	00NR	0	'FROM->TO'	G11_050	'CIMARRON - DRAPER LAKE 345KV CKT 1'	717	0.052	103.01	'GRAND ISLAND - SWEETWATER 345KV CKT 1'
13WP	00NR	0	'FROM->TO'	G11_050	'CIMARRON - DRAPER LAKE 345KV CKT 1'	717	0.052	102.96	'AXTELL - PAULINE 345KV CKT 1'
13WP	00NR	0	'FROM->TO'	G11_050	'CIMARRON - DRAPER LAKE 345KV CKT 1'	717	0.052	102.94	'AI43'
13WP	00NR	0	'FROM->TO'	G11_050	'CIMARRON - DRAPER LAKE 345KV CKT 1'	717	0.052	102.93	'7LUTESVIL 345.00 - 7ST FRANC 345.00 345KV CKT 1'
13WP	00NR	0	'FROM->TO'	G11_050	'CIMARRON - DRAPER LAKE 345KV CKT 1'	717	0.052	101.38	'DELL 500 - INDEPENDENCE 500KV CKT 1'
13WP	00NR	0	'FROM->TO'	G11_050	'CIMARRON - DRAPER LAKE 345KV CKT 1'	717	0.052	103.29	'36 & MERIDIAN - PENNSYLVANIA 138KV CKT 1'
13WP	00NR	0	'FROM->TO'	G11_050	'CIMARRON - DRAPER LAKE 345KV CKT 1'	717	0.052	102.83	'MOORE - PAULINE 345KV CKT 1'
13WP	00NR	0	'FROM->TO'	G11_050	'CIMARRON - DRAPER LAKE 345KV CKT 1'	717	0.052	102.95	'HAMMETT TAP - HAMMETT2 138KV CKT 1'
13WP	00NR	0	'FROM->TO'	G11_050	'CIMARRON - DRAPER LAKE 345KV CKT 1'	717	0.052	102.83	'HAMMETT2 - MEEKER 138KV CKT 1'
13WP	00NR	0	'FROM->TO'	G11_050	'CIMARRON - DRAPER LAKE 345KV CKT 1'	717	0.052	101.73	'SEMINOLE - VANOSS 138KV CKT 1'
13WP	00NR	0	'FROM->TO'	G11_050	'CIMARRON - DRAPER LAKE 345KV CKT 1'	717	0.052	102.74	'SHERIDAN EHV - WHITE BLUFF 500KV CKT 1'
13WP	00NR	0	'FROM->TO'	G11_050	'CIMARRON - DRAPER LAKE 345KV CKT 1'	717	0.052	102.97	'7JASPER 345.00 - BLACKBERRY 345KV CKT 1'
13WP	00NR	0	'FROM->TO'	G11_050	'CIMARRON - DRAPER LAKE 345KV CKT 1'	717	0.052	101.69	'NELSON - RICHARD 500KV CKT 1'
13WP	00NR	0	'FROM->TO'	G11_050	'CIMARRON - DRAPER LAKE 345KV CKT 1'	717	0.052	102.87	'CLINTON - MONTROSE 161KV CKT 1'
13WP	00NR	0	'FROM->TO'	G11_050	'CIMARRON - DRAPER LAKE 345KV CKT 1'	717	0.052	101.57	'BAXTER WILSON SES - PERRYVILLE 500KV CKT 1'
13WP	00NR	0	'FROM->TO'	G11_050	'CIMARRON - DRAPER LAKE 345KV CKT 1'	717	0.052	104.11	'HORSESHOE LAKE - JONES TAP 138KV CKT 1'
13WP	00NR	0	'FROM->TO'	G11_050	'CIMARRON - DRAPER LAKE 345KV CKT 1'	717	0.052	103.24	'MCELROY - STILLWATER 138KV CKT 1'
13WP	00NR	0	'FROM->TO'	G11_050	'CIMARRON - DRAPER LAKE 345KV CKT 1'	717	0.052	102.99	'KINZE - MCELROY 138KV CKT 1'
13WP	00NR	0	'FROM->TO'	G11_050	'CIMARRON - DRAPER LAKE 345KV CKT 1'	717	0.052	102.75	'OUMED 4 - STONEWALL 138KV CKT 1'
13WP	00NR	0	'FROM->TO'	G11_050	'CIMARRON - DRAPER LAKE 345KV CKT 1'	717	0.052	102.74	'OUMED 4 - PARK PLACE 138KV CKT 1'
13WP	00NR	0	'FROM->TO'	G11_050	'CIMARRON - DRAPER LAKE 345KV CKT 1'	717	0.052	101.57	'DBL-CLRK-G11'
13WP	00NR	0	'FROM->TO'	G11_050	'CIMARRON - DRAPER LAKE 345KV CKT 1'	717	0.052	101.14	'DBL-THIS-CLR'
13WP	00NR	0	'FROM->TO'	G11_050	'CIMARRON - DRAPER LAKE 345KV CKT 1'	717	0.052	103.14	'8DANIEL 500.00 - MCKNIGHT 500KV CKT 1'
13WP	00NR	0	'FROM->TO'	G11_050	'CIMARRON - DRAPER LAKE 345KV CKT 1'	717	0.052	102.70	'NEOSHO (NEOSHO2X) 345/161/13.8KV TRANSFORMER CKT 1'
13WP	00NR	0	'FROM->TO'	G11_050	'CIMARRON - DRAPER LAKE 345KV CKT 1'	717	0.052	102.83	'OGE3TERM28'
13WP	00NR	0	'FROM->TO'	G11_050	'CIMARRON - DRAPER LAKE 345KV CKT 1'	717	0.052	102.70	'CELE-WELLOP1'
13WP	00NR	0	'FROM->TO'	G11_050	'CIMARRON - DRAPER LAKE 345KV CKT 1'	717	0.052	102.69	'SAPULPA ROAD - WEKIWA 345KV CKT 1'
13WP	00NR	0	'FROM->TO'	G11_050	'CIMARRON - DRAPER LAKE 345KV CKT 1'	717	0.052	103.08	'OGE3TERM19'
13WP	00NR	0	'FROM->TO'	G11_050	'CIMARRON - DRAPER LAKE 345KV CKT 1'	717	0.052	102.79	'ATCHSNT3 345.00 - BOONEVILLE 345KV CKT 1'
13WP	00NR	0	'FROM->TO'	G11_050	'CIMARRON - DRAPER LAKE 345KV CKT 1'	717	0.052	102.72	'ATCHSNT3 345.00 - COOPER 345KV CKT 1'
13WP	00NR	0	'FROM->TO'	G11_050	'CIMARRON - DRAPER LAKE 345KV CKT 1'	717	0.052	102.54	'HEFNER - TULSA 138KV CKT 1'
13WP	00NR	0	'FROM->TO'	G11_050	'CIMARRON - DRAPER LAKE 345KV CKT 1'	717	0.052	101.71	'BAXTER WILSON SES - RAY BRASWELL SES 500KV CKT 1'
13WP	00NR	0	'FROM->TO'	G11_050	'CIMARRON - DRAPER LAKE 345KV CKT 1'	717	0.052	101.58	'CANADIAN RIVER - MCALESTER SOUTH 138KV CKT 1'
13WP	00NR	0	'FROM->TO'	G11_050	'CIMARRON - DRAPER LAKE 345KV CKT 1'	717	0.052	101.57	'CANADIAN RIVER () 345/138/13.8KV TRANSFORMER CKT 1'
13WP	00NR	0	'FROM->TO'	G11_050	'CIMARRON - DRAPER LAKE 345KV CKT 1'	717	0.052	102.98	'OGE3TERM13'
13WP	00NR	0	'FROM->TO'	G11_050	'CIMARRON - DRAPER LAKE 345KV CKT 1'	717	0.052	102.95	'GRDA-OPGD-05'
13WP	00NR	0	'FROM->TO'	G11_050	'CIMARRON - DRAPER LAKE 345KV CKT 1'	717	0.052	101.81	'RENO COUNTY - WICHITA 345KV CKT 1'
13WP	00NR	0	'FROM->TO'	G11_050	'CIMARRON - DRAPER LAKE 345KV CKT 1'	717	0.052	104.19	'OGE3TERM12'
13WP	00NR	0	'FROM->TO'	G11_050	'CIMARRON - DRAPER LAKE 345KV CKT 1'	717	0.052	102.75	'EL RENO - ROMAN NOSE 138KV CKT 1'
13WP	00NR	0	'FROM->TO'	G11_050	'CIMARRON - DRAPER LAKE 345KV CKT 1'	717	0.052	102.75	'A059'
13WP	00NR	0	'FROM->TO'	G11_050	'CIMARRON - DRAPER LAKE 345KV CKT 1'	717	0.052	102.75	'EUREKA SPRIN'
13WP	00NR	0	'FROM->TO'	G11_050	'CIMARRON - DRAPER LAKE 345KV CKT 1'	717	0.052	102.72	'ROMAN NOSE - SOUTHARD 138KV CKT 1'
13WP	00NR	0	'FROM->TO'	G11_050	'CIMARRON - DRAPER LAKE 345KV CKT 1'	717	0.052	110.45	'GEN336821 1-GRAND GULF UNIT'
13WP	00NR	0	'FROM->TO'	G11_050	'CIMARRON - DRAPER LAKE 345KV CKT 1'	717	0.052	110.25	'GEN336153 1-WATERFORD UNIT#3'
13WP	00NR	0	'FROM->TO'	G11_050	'CIMARRON - DRAPER LAKE 345KV CKT 1'	717	0.052	109.19	'GEN337911 1-ARKANSAS NUCLEAR ONE UNIT #2'
13WP	00NR	0	'FROM->TO'	G11_050	'CIMARRON - DRAPER LAKE 345KV CKT 1'	717	0.052	109.13	'GEN335831 1-RIVERBEND UNIT#1'
13WP	00NR	0	'FROM->TO'	G11_050	'CIMARRON - DRAPER LAKE 345KV CKT 1'	717	0.052	108.27	'GEN501801 1-DOLET HILLS UNIT1'
13WP	00NR	0	'FROM->TO'	G11_050	'CIMARRON - DRAPER LAKE 345KV CKT 1'	717	0.052	108.02	'GEN337910 1-ARKANSAS NUCLEAR ONE UNIT #1'
13WP	00NR	0	'FROM->TO'	G11_050	'CIMARRON - DRAPER LAKE 345KV CKT 1'	717	0.052	107.77	'GEN520947 1-HUGO1'
13WP	00NR	0	'FROM->TO'	G11_050	'CIMARRON - DRAPER LAKE 345KV CKT 1'	717	0.052	107.17	'GEN337652 1-WHITE BLUFF UNIT #1'
13WP	00NR	0	'FROM->TO'	G11_050	'CIMARRON - DRAPER LAKE 345KV CKT 1'	717	0.052	106.95	'GEN509416 1-TURK GENERATION'
13WP	00NR	0	'FROM->TO'	G11_050	'CIMARRON - DRAPER LAKE 345KV CKT 1'	717	0.052	106.94	'GEN509403 1-PIRKEY GENERATION'
13WP	00NR	0	'FROM->TO'	G11_050	'CIMARRON - DRAPER LAKE 345KV CKT 1'	717	0.052	106.90	'GEN515042 1-SEMINOLE 3G'

SEASON	GROUP	SCENARIO	DIRECTION	SOURCE	MONITORED ELEMENT	RATE B (MVA)	TDF	(%MVA) LOADING	CONTINGENCY
13WP	00NR	0	'FROM->TO'	G11_050	'CIMARRON - DRAPER LAKE 345KV CKT 1'	717	0.052	106.82	'GEN337653 1-WHITE BLUFF UNIT #2'
13WP	00NR	0	'FROM->TO'	G11_050	'CIMARRON - DRAPER LAKE 345KV CKT 1'	717	0.052	106.75	'GEN336251 1-NINEMILE POINT UNIT#4'
13WP	00NR	0	'FROM->TO'	G11_050	'CIMARRON - DRAPER LAKE 345KV CKT 1'	717	0.052	106.70	'GEN515040 1-SEMINOLE 1G'
13WP	00NR	0	'FROM->TO'	G11_050	'CIMARRON - DRAPER LAKE 345KV CKT 1'	717	0.052	106.61	'GEN501813 1-RODEMACHER UNIT 3'
13WP	00NR	0	'FROM->TO'	G11_050	'CIMARRON - DRAPER LAKE 345KV CKT 1'	717	0.052	106.60	'GEN338146 1-INDEPENDENCE UNIT #2'
13WP	00NR	0	'FROM->TO'	G11_050	'CIMARRON - DRAPER LAKE 345KV CKT 1'	717	0.052	106.44	'GEN337041 1-GERALD ANDRUS'
13WP	00NR	0	'FROM->TO'	G11_050	'CIMARRON - DRAPER LAKE 345KV CKT 1'	717	0.052	106.43	'GEN338143 1-INDEPENDENCE UNIT #1'
13WP	00NR	0	'FROM->TO'	G11_050	'CIMARRON - DRAPER LAKE 345KV CKT 1'	717	0.052	106.30	'GEN515041 1-SEMINOLE 2G'
13WP	00NR	0	'FROM->TO'	G11_050	'CIMARRON - DRAPER LAKE 345KV CKT 1'	717	0.052	106.03	'GEN509406 1-WELSH #3'
13WP	00NR	0	'FROM->TO'	G11_050	'CIMARRON - DRAPER LAKE 345KV CKT 1'	717	0.052	106.03	'GEN509405 1-WELSH #2'
13WP	00NR	0	'FROM->TO'	G11_050	'CIMARRON - DRAPER LAKE 345KV CKT 1'	717	0.052	106.03	'GEN509404 1-WELSH #1'
13WP	00NR	0	'FROM->TO'	G11_050	'CIMARRON - DRAPER LAKE 345KV CKT 1'	717	0.052	106.02	'GEN334440 1-SABINE UNIT 4'
13WP	00NR	0	'FROM->TO'	G11_050	'CIMARRON - DRAPER LAKE 345KV CKT 1'	717	0.052	106.02	'GEN501812 1-RODEMACHER UNIT 2'
13WP	00NR	0	'FROM->TO'	G11_050	'CIMARRON - DRAPER LAKE 345KV CKT 1'	717	0.052	105.89	'GEN335206 1-NELSON UNIT 6'
13WP	00NR	0	'FROM->TO'	G11_050	'CIMARRON - DRAPER LAKE 345KV CKT 1'	717	0.052	105.77	'GEN515226 1-MUSKOGEE 6G'
13WP	00NR	0	'FROM->TO'	G11_050	'CIMARRON - DRAPER LAKE 345KV CKT 1'	717	0.052	105.69	'GEN336831 1-BAXTER WILSON SES'
13WP	00NR	0	'FROM->TO'	G11_050	'CIMARRON - DRAPER LAKE 345KV CKT 1'	717	0.052	105.56	'GEN334441 1-SABINE UNIT 5'
13WP	00NR	0	'FROM->TO'	G11_050	'CIMARRON - DRAPER LAKE 345KV CKT 1'	717	0.052	105.40	'GEN338388 1-1PLUMPT 23.000'
13WP	00NR	0	'FROM->TO'	G11_050	'CIMARRON - DRAPER LAKE 345KV CKT 1'	717	0.052	105.29	'GEN515223 1-MUSKOGEE 4G'
13WP	00NR	0	'FROM->TO'	G11_050	'CIMARRON - DRAPER LAKE 345KV CKT 1'	717	0.052	105.25	'GEN335204 1-NELSON UNIT 4'
13WP	00NR	0	'FROM->TO'	G11_050	'CIMARRON - DRAPER LAKE 345KV CKT 1'	717	0.052	105.24	'GEN515225 1-MUSKOGEE 5G'
13WP	00NR	0	'FROM->TO'	G11_050	'CIMARRON - DRAPER LAKE 345KV CKT 1'	717	0.052	105.17	'GEN334433 1-SABINE UNIT 3'
13WP	00NR	0	'FROM->TO'	G11_050	'CIMARRON - DRAPER LAKE 345KV CKT 1'	717	0.052	105.15	'GEN336801 1-BAXTER WILSON UNIT #1'
13WP	00NR	0	'FROM->TO'	G11_050	'CIMARRON - DRAPER LAKE 345KV CKT 1'	717	0.052	104.07	'GEN336170 1-GULF OXY U4'
13WP	00NR	0	'FROM->TO'	G11_050	'CIMARRON - DRAPER LAKE 345KV CKT 1'	717	0.052	103.92	'GEN334070 1-LEWIS CREEK 1'
13WP	00NR	0	'FROM->TO'	G11_050	'CIMARRON - DRAPER LAKE 345KV CKT 1'	717	0.052	103.89	'GEN334071 1-LEWIS CREEK 2'
13WP	00NR	0	'FROM->TO'	G11_050	'CIMARRON - DRAPER LAKE 345KV CKT 1'	717	0.052	103.74	'GEN300006 1-NEW MADRID UNIT 1'
13WP	00NR	0	'FROM->TO'	G11_050	'CIMARRON - DRAPER LAKE 345KV CKT 1'	717	0.052	103.72	'GEN300007 1-NEW MADRID UNIT 2'
13WP	00NR	0	'FROM->TO'	G11_050	'CIMARRON - DRAPER LAKE 345KV CKT 1'	717	0.052	103.63	'GEN509391 G1-ARSENAL HILL GENS #2 (STALL)'
13WP	00NR	0	'FROM->TO'	G11_050	'CIMARRON - DRAPER LAKE 345KV CKT 1'	717	0.052	103.63	'GEN509392 G2-ARSENAL HILL GENS #3 (STALL)'
13WP	00NR	0	'FROM->TO'	G11_050	'CIMARRON - DRAPER LAKE 345KV CKT 1'	717	0.052	103.61	'GEN334432 1-SABINE UNIT 2'
13WP	00NR	0	'FROM->TO'	G11_050	'CIMARRON - DRAPER LAKE 345KV CKT 1'	717	0.052	103.56	'GEN334030 1-FRONTIER UNIT 1'
13WP	00NR	0	'FROM->TO'	G11_050	'CIMARRON - DRAPER LAKE 345KV CKT 1'	717	0.052	103.56	'GEN334031 1-FRONTIER UNIT 2'
13WP	00NR	0	'FROM->TO'	G11_050	'CIMARRON - DRAPER LAKE 345KV CKT 1'	717	0.052	103.55	'GEN509393 S1-ARSENAL HILL GENS #4 (STALL)'
13WP	00NR	0	'FROM->TO'	G11_050	'CIMARRON - DRAPER LAKE 345KV CKT 1'	717	0.052	103.54	'GEN334431 1-SABINE UNIT 1'
13WP	00NR	0	'FROM->TO'	G11_050	'CIMARRON - DRAPER LAKE 345KV CKT 1'	717	0.052	103.54	'GEN509394 1-FLINT CREEK'
13WP	00NR	0	'FROM->TO'	G11_050	'CIMARRON - DRAPER LAKE 345KV CKT 1'	717	0.052	103.51	'GEN514998 1-MCCLAIN UNIT 1'
13WP	00NR	0	'FROM->TO'	G11_050	'CIMARRON - DRAPER LAKE 345KV CKT 1'	717	0.052	103.51	'GEN503909 1-FULTONU1 1 16.000'
13WP	00NR	0	'FROM->TO'	G11_050	'CIMARRON - DRAPER LAKE 345KV CKT 1'	717	0.052	103.50	'GEN335612 1-WILLOW GLENN UNIT#2'
13WP	00NR	0	'FROM->TO'	G11_050	'CIMARRON - DRAPER LAKE 345KV CKT 1'	717	0.052	103.50	'GEN509408 1-WILKES #2'
13WP	00NR	0	'FROM->TO'	G11_050	'CIMARRON - DRAPER LAKE 345KV CKT 1'	717	0.052	103.45	'GEN511843 1-RIVERSIDE STATION #2'
13WP	00NR	0	'FROM->TO'	G11_050	'CIMARRON - DRAPER LAKE 345KV CKT 1'	717	0.052	103.42	'GEN506752 1-LEBROCK GAS 1'
13WP	00NR	0	'FROM->TO'	G11_050	'CIMARRON - DRAPER LAKE 345KV CKT 1'	717	0.052	103.42	'GEN337429 1-PERYVILLE UNIT #2'
13WP	00NR	0	'FROM->TO'	G11_050	'CIMARRON - DRAPER LAKE 345KV CKT 1'	717	0.052	103.42	'GEN337432 1-PERYVILLE UNIT #5'
13WP	00NR	0	'FROM->TO'	G11_050	'CIMARRON - DRAPER LAKE 345KV CKT 1'	717	0.052	103.37	'GEN337428 1-PERYVILLE UNIT #1'
13WP	00NR	0	'FROM->TO'	G11_050	'CIMARRON - DRAPER LAKE 345KV CKT 1'	717	0.052	103.37	'GEN337430 1-PERYVILLE UNIT #3'
13WP	00NR	0	'FROM->TO'	G11_050	'CIMARRON - DRAPER LAKE 345KV CKT 1'	717	0.052	103.37	'GEN335075 1-DYNEGY#1'
13WP	00NR	0	'FROM->TO'	G11_050	'CIMARRON - DRAPER LAKE 345KV CKT 1'	717	0.052	103.35	'GEN335203 1-NELSON UNIT 3'
13WP	00NR	0	'FROM->TO'	G11_050	'CIMARRON - DRAPER LAKE 345KV CKT 1'	717	0.052	103.35	'GEN336167 1-GULF OXY U1'
13WP	00NR	0	'FROM->TO'	G11_050	'CIMARRON - DRAPER LAKE 345KV CKT 1'	717	0.052	103.35	'GEN336168 1-GULF OXY U2'
13WP	00NR	0	'FROM->TO'	G11_050	'CIMARRON - DRAPER LAKE 345KV CKT 1'	717	0.052	103.35	'GEN336169 1-GULF OXY U3'
13WP	00NR	0	'FROM->TO'	G11_050	'CIMARRON - DRAPER LAKE 345KV CKT 1'	717	0.052	103.34	'GEN318007 1-5MOROW161 161.00'
13WP	00NR	0	'FROM->TO'	G11_050	'CIMARRON - DRAPER LAKE 345KV CKT 1'	717	0.052	103.31	'GEN337421 1-OUCHITA CTG1'
13WP	00NR	0	'FROM->TO'	G11_050	'CIMARRON - DRAPER LAKE 345KV CKT 1'	717	0.052	103.31	'GEN337423 1-OUCHITA CTG2'
13WP	00NR	0	'FROM->TO'	G11_050	'CIMARRON - DRAPER LAKE 345KV CKT 1'	717	0.052	103.31	'GEN337425 1-OUCHITA CTG3'
13WP	00NR	0	'FROM->TO'	G11_050	'CIMARRON - DRAPER LAKE 345KV CKT 1'	717	0.052	103.31	'GEN512688 2-GRDA1 GSU2 22'
13WP	00NR	0	'FROM->TO'	G11_050	'CIMARRON - DRAPER LAKE 345KV CKT 1'	717	0.052	103.29	'GEN334392 1-EXXON MOBIL IPP 1'
13WP	00NR	0	'FROM->TO'	G11_050	'CIMARRON - DRAPER LAKE 345KV CKT 1'	717	0.052	103.22	'GEN337006 1-DUKE MCADAMS G1'
13WP	00NR	0	'FROM->TO'	G11_050	'CIMARRON - DRAPER LAKE 345KV CKT 1'	717	0.052	103.22	'GEN337007 1-DUKE MCADAMS G2'
13WP	00NR	0	'FROM->TO'	G11_050	'CIMARRON - DRAPER LAKE 345KV CKT 1'	717	0.052	103.20	'GEN512689 1-GRDA1 GSU1 22'
13WP	00NR	0	'FROM->TO'	G11_050	'CIMARRON - DRAPER LAKE 345KV CKT 1'	717	0.052	103.20	'GEN337008 1-DUKE MCADAMS S1'
13WP	00NR	0	'FROM->TO'	G11_050	'CIMARRON - DRAPER LAKE 345KV CKT 1'	717	0.052	103.18	'GEN505432 1-SIKESTON'
13WP	00NR	0	'FROM->TO'	G11_050	'CIMARRON - DRAPER LAKE 345KV CKT 1'	717	0.052	103.16	'GEN338500 1-MCCLELLAN UNIT #1'
13WP	00NR	0	'FROM->TO'	G11_050	'CIMARRON - DRAPER LAKE 345KV CKT 1'	717	0.052	103.09	'GEN515266 1-AES 1G'
13WP	00NR	0	'FROM->TO'	G11_050	'CIMARRON - DRAPER LAKE 345KV CKT 1'	717	0.052	103.09	'GEN515267 1-AES 2G'
13WP	00NR	0	'FROM->TO'	G11_050	'CIMARRON - DRAPER LAKE 345KV CKT 1'	717	0.052	103.07	'GEN335611 1-WILLOW GLENN UNIT#1'
13WP	00NR	0	'FROM->TO'	G11_050	'CIMARRON - DRAPER LAKE 345KV CKT 1'	717	0.052	103.05	'GEN511840 1-NORTHEASTERN STATION #3'
13WP	00NR	0	'FROM->TO'	G11_050	'CIMARRON - DRAPER LAKE 345KV CKT 1'	717	0.052	103.05	'GEN337954 1-LYNCH UNIT #3'
13WP	00NR	0	'FROM->TO'	G11_050	'CIMARRON - DRAPER LAKE 345KV CKT 1'	717	0.052	103.03	'GEN511841 1-NORTHEASTERN STATION #4'
13WP	00NR	0	'FROM->TO'	G11_050	'CIMARRON - DRAPER LAKE 345KV CKT 1'	717	0.052	103.02	'GEN335201 1-NELSON UNIT 1'
13WP	00NR	0	'FROM->TO'	G11_050	'CIMARRON - DRAPER LAKE 345KV CKT 1'	717	0.052	103.01	'GEN511938 1-OEC STEAM # 1'
13WP	00NR	0	'FROM->TO'	G11_050	'CIMARRON - DRAPER LAKE 345KV CKT 1'	717	0.052	103.01	'GEN511839 1-NORTHEASTERN STATION #2'
13WP	00NR	0	'FROM->TO'	G11_050	'CIMARRON - DRAPER LAKE 345KV CKT 1'	717	0.052	103.01	'GEN335202 1-NELSON UNIT 2'
13WP	00NR	0	'FROM->TO'	G11_050	'CIMARRON - DRAPER LAKE 345KV CKT 1'	717	0.052	102.99	'GEN336944 1-REX BROWN'
13WP	00NR	0	'FROM->TO'	G11_050	'CIMARRON - DRAPER LAKE 345KV CKT 1'	717	0.052	102.98	'OGE3TERM3'
13WP	00NR	0	'FROM->TO'	G11_050	'CIMARRON - DRAPER LAKE 345KV CKT 1'	717	0.052	102.96	'GEN506749 1-EASTMAN GENERATION A'
13WP	00NR	0	'FROM->TO'	G11_050	'CIMARRON - DRAPER LAKE 345KV CKT 1'	717	0.052	102.92	'GEN337422 1-OUCHITA STG1'
13WP	00NR	0	'FROM->TO'	G11_050	'CIMARRON - DRAPER LAKE 345KV CKT 1'	717	0.052	102.92	'GEN337424 1-OUCHITA STG2'

SEASON	GROUP	SCENARIO	DIRECTION	SOURCE	MONITORED ELEMENT	RATE B (MVA)	TDF	(%MVA) LOADING	CONTINGENCY
13WP	00NR	0	'FROM->TO'	G11_050	'CIMARRON - DRAPER LAKE 345KV CKT 1'	717	0.052	102.92	'GEN337426 1-OUCHITA STG3'
13WP	00NR	0	'FROM->TO'	G11_050	'CIMARRON - DRAPER LAKE 345KV CKT 1'	717	0.052	102.91	'GEN511842 1-RIVERSIDE STATION #1'
13WP	00NR	0	'FROM->TO'	G11_050	'CIMARRON - DRAPER LAKE 345KV CKT 1'	717	0.052	102.89	'GEN335137 C4-PPG'
13WP	00NR	0	'FROM->TO'	G11_050	'CIMARRON - DRAPER LAKE 345KV CKT 1'	717	0.052	102.89	'GEN338510 1-1S1KNWRI'
13WP	00NR	0	'FROM->TO'	G11_050	'CIMARRON - DRAPER LAKE 345KV CKT 1'	717	0.052	102.89	'GEN338511 1-1C7KNWRI'
13WP	00NR	0	'FROM->TO'	G11_050	'CIMARRON - DRAPER LAKE 345KV CKT 1'	717	0.052	102.87	'GEN338513 1-BAILEY UNIT #1'
13WP	00NR	0	'FROM->TO'	G11_050	'CIMARRON - DRAPER LAKE 345KV CKT 1'	717	0.052	102.82	'GEN500915 3-WESTERN KRAFT'
13WP	00NR	0	'FROM->TO'	G11_050	'CIMARRON - DRAPER LAKE 345KV CKT 1'	717	0.052	102.81	'GEN300015 1-1SGPDEL 18.000'
13WP	00NR	0	'FROM->TO'	G11_050	'CIMARRON - DRAPER LAKE 345KV CKT 1'	717	0.052	102.81	'GEN300016 1-1G1GPDEL 18.000'
13WP	00NR	0	'FROM->TO'	G11_050	'CIMARRON - DRAPER LAKE 345KV CKT 1'	717	0.052	102.81	'GEN300017 1-1G2GPDEL 18.000'
13WP	00NR	0	'FROM->TO'	G11_050	'CIMARRON - DRAPER LAKE 345KV CKT 1'	717	0.052	102.80	'GEN501910 1-ACADIA UNIT ST1'
13WP	00NR	0	'FROM->TO'	G11_050	'CIMARRON - DRAPER LAKE 345KV CKT 1'	717	0.052	102.79	'GEN334467 1-DUPONT UNIT#1'
13WP	00NR	0	'FROM->TO'	G11_050	'CIMARRON - DRAPER LAKE 345KV CKT 1'	717	0.052	102.79	'GEN503900 1-FITZHUGH CT1'
13WP	00NR	0	'FROM->TO'	G11_050	'CIMARRON - DRAPER LAKE 345KV CKT 1'	717	0.052	102.79	'GEN334335 1-TOLEDO BEND'
13WP	00NR	0	'FROM->TO'	G11_050	'CIMARRON - DRAPER LAKE 345KV CKT 1'	717	0.052	102.77	'GEN335546 3-DOW COGEN'
13WP	00NR	0	'FROM->TO'	G11_050	'CIMARRON - DRAPER LAKE 345KV CKT 1'	717	0.052	102.77	'GEN337124 5-LS POWER BATESVILLE'
13WP	00NR	0	'FROM->TO'	G11_050	'CIMARRON - DRAPER LAKE 345KV CKT 1'	717	0.052	102.76	'GEN318008 3-5MOSEL161 161.00'
13WP	00NR	0	'FROM->TO'	G11_050	'CIMARRON - DRAPER LAKE 345KV CKT 1'	717	0.052	102.74	'GEN336176 1-UNION CARBIDE COGEN GT1'
13WP	00NR	0	'FROM->TO'	G11_050	'CIMARRON - DRAPER LAKE 345KV CKT 1'	717	0.052	102.74	'GEN336177 1-UNION CARBIDE COGEN GT2'
13WP	00NR	0	'FROM->TO'	G11_050	'CIMARRON - DRAPER LAKE 345KV CKT 1'	717	0.052	102.71	'GEN509409 1-WILKES #3'
13WP	00NR	0	'FROM->TO'	G11_050	'CIMARRON - DRAPER LAKE 345KV CKT 1'	717	0.052	102.65	'GEN300003 1-THOMAS HILL UNIT 3'
13WP	00NR	0	'FROM->TO'	G11_050	'CIMARRON - DRAPER LAKE 345KV CKT 1'	717	0.052	102.23	'BASE CASE'
13WP	00NR	0	'FROM->TO'	G11_050	'CIMARRON - DRAPER LAKE 345KV CKT 1'	717	0.052	101.76	'GEN532663 1-LAWRENCE ENERGY CENTER UNIT 5'
13WP	00NR	0	'FROM->TO'	G11_050	'CIMARRON - DRAPER LAKE 345KV CKT 1'	717	0.052	101.73	'GEN542956 2-LACYGNE UNIT #2'
13WP	00NR	0	'FROM->TO'	G11_050	'CIMARRON - DRAPER LAKE 345KV CKT 1'	717	0.052	101.71	'GEN542955 1-LACYGNE UNIT #1'
13WP	00NR	0	'FROM->TO'	G11_050	'CIMARRON - DRAPER LAKE 345KV CKT 1'	717	0.052	101.64	'DRAPER LAKE - DRPCAPS4 138.00 138KV CKT 1'
13WP	00NR	0	'FROM->TO'	G11_050	'CIMARRON - DRAPER LAKE 345KV CKT 1'	717	0.052	101.50	'GEN523462 1-BLACKHAWK GEN #2'
13WP	00NR	0	'FROM->TO'	G11_050	'CIMARRON - DRAPER LAKE 345KV CKT 1'	717	0.052	101.50	'GEN523461 1-BLACKHAWK GEN #1'
13WP	00NR	0	'FROM->TO'	G11_050	'CIMARRON - DRAPER LAKE 345KV CKT 1'	717	0.052	101.28	'GEN527165 1-Mustang Gen #5'
13WP	00NR	0	'FROM->TO'	G11_050	'CIMARRON - DRAPER LAKE 345KV CKT 1'	717	0.052	101.28	'GEN527164 1-MUSTANG GEN #4 22 KV'
13WP	00NR	0	'FROM->TO'	G11_050	'CIMARRON - DRAPER LAKE 345KV CKT 1'	717	0.052	101.27	'GEN532653 1-JEFFREY ENERGY CENTER UNIT 3'
13WP	00NR	0	'FROM->TO'	G11_050	'CIMARRON - DRAPER LAKE 345KV CKT 1'	717	0.052	101.26	'GEN527901 1-HOBBS PLANT #1 (CT)'
13WP	00NR	0	'FROM->TO'	G11_050	'CIMARRON - DRAPER LAKE 345KV CKT 1'	717	0.052	101.26	'GEN527902 1-HOBBS PLANT #2 (CT)'
13WP	00NR	0	'FROM->TO'	G11_050	'CIMARRON - DRAPER LAKE 345KV CKT 1'	717	0.052	101.25	'GEN532651 1-JEFFREY ENERGY CENTER UNIT 1'
13WP	00NR	0	'FROM->TO'	G11_050	'CIMARRON - DRAPER LAKE 345KV CKT 1'	717	0.052	101.23	'GEN532652 1-JEFFREY ENERGY CENTER UNIT 2'
13WP	00NR	0	'FROM->TO'	G11_050	'CIMARRON - DRAPER LAKE 345KV CKT 1'	717	0.052	101.22	'GEN527163 1-MUSTANG GEN #3 22 KV'
13WP	00NR	0	'FROM->TO'	G11_050	'CIMARRON - DRAPER LAKE 345KV CKT 1'	717	0.052	101.20	'GEN527161 1-MUSTANG GEN #1'
13WP	00NR	0	'FROM->TO'	G11_050	'CIMARRON - DRAPER LAKE 345KV CKT 1'	717	0.052	101.19	'GEN527162 1-MUSTANG GEN #2'
13WP	00NR	0	'FROM->TO'	G11_050	'CIMARRON - DRAPER LAKE 345KV CKT 1'	717	0.052	101.13	'GEN520997 1-MORLND2'
13WP	00NR	0	'FROM->TO'	G11_050	'CIMARRON - DRAPER LAKE 345KV CKT 1'	717	0.052	101.06	'GEN520998 1-MORLND3'
13WP	00NR	0	'FROM->TO'	G11_050	'CIMARRON - DRAPER LAKE 345KV CKT 1'	717	0.052	101.03	'GEN527903 1-HOBBS PLANT #3 (ST)'
13WP	00NR	0	'FROM->TO'	G11_050	'CIMARRON - DRAPER LAKE 345KV CKT 1'	717	0.052	100.80	'GEN526333 1-JONES GEN #3 21 KV'
13WP	00NR	0	'FROM->TO'	G11_050	'CIMARRON - DRAPER LAKE 345KV CKT 1'	717	0.052	100.80	'GEN526334 1-JONES_4 116.500'
13WP	00NR	0	'FROM->TO'	G11_050	'CIMARRON - DRAPER LAKE 345KV CKT 1'	717	0.052	100.43	'GEN531447 1-HOLCOMB GENERATOR'
13WP	00NR	0	'FROM->TO'	G11_050	'CIMARRON - DRAPER LAKE 345KV CKT 1'	717	0.052	100.34	'GEN514805 1-SOONER UNIT 1'
13WP	00NR	0	'FROM->TO'	G11_050	'CIMARRON - DRAPER LAKE 345KV CKT 1'	717	0.052	100.06	'GEN525561 1-TOLK GEN #1 24 KV'
13WP	00NR	0	'FROM->TO'	G11_050	'CIMARRON - DRAPER LAKE 345KV CKT 1'	717	0.052	100.00	'GEN514806 1-SOONER UNIT 2'
13WP	00NR	0	'FROM->TO'	G11_050	'CIMARRON - DRAPER LAKE 345KV CKT 1'	717	0.052	102.80	'WOODRING (WOODRNG2) 345/138/13.8KV TRANSFORMER CKT 1'
13WP	00NR	0	'FROM->TO'	G11_050	'CIMARRON - DRAPER LAKE 345KV CKT 1'	717	0.052	102.60	'MORISNT4 138.00 - SOONER 138KV CKT 1'
13WP	00NR	0	'FROM->TO'	G11_050	'CIMARRON - DRAPER LAKE 345KV CKT 1'	717	0.052	101.73	'OGE3TERM41'
13WP	00NR	0	'FROM->TO'	G11_050	'CIMARRON - DRAPER LAKE 345KV CKT 1'	717	0.052	101.64	'G11_040_TAP 138.00 - POOLEVILLE 138KV CKT 1'
13WP	00NR	0	'FROM->TO'	G11_050	'CIMARRON - DRAPER LAKE 345KV CKT 1'	717	0.052	102.69	'5LOCSTGV - MAID 161KV CKT 1'
13WP	00NR	0	'FROM->TO'	G11_050	'CIMARRON - DRAPER LAKE 345KV CKT 1'	717	0.052	102.68	'5CDRCRST 161.00 - 5LOCSTGV 161KV CKT 1'
13WP	00NR	0	'FROM->TO'	G11_050	'CIMARRON - DRAPER LAKE 345KV CKT 1'	717	0.052	103.33	'OGE3TERM17'
13WP	00NR	0	'FROM->TO'	G11_050	'CIMARRON - DRAPER LAKE 345KV CKT 1'	717	0.052	101.76	'Hitchland Interchange - WOODWARD DISTRICT EHV 345KV CKT 2'
12WP	00NR	0	'FROM->TO'	G11_050	'CIMARRON - DRAPER LAKE 345KV CKT 1'	717	0.052	106.80	'GEN336821 1-GRAND GULF UNIT'
12WP	00NR	0	'FROM->TO'	G11_050	'CIMARRON - DRAPER LAKE 345KV CKT 1'	717	0.052	106.35	'GEN336153 1-WATERFORD UNIT#3'
12WP	00NR	0	'FROM->TO'	G11_050	'CIMARRON - DRAPER LAKE 345KV CKT 1'	717	0.052	105.55	'GEN515042 1-SEMINOLE 3G'
12WP	00NR	0	'FROM->TO'	G11_050	'CIMARRON - DRAPER LAKE 345KV CKT 1'	717	0.052	105.38	'GEN337911 1-ARKANSAS NUCLEAR ONE UNIT #2'
12WP	00NR	0	'FROM->TO'	G11_050	'CIMARRON - DRAPER LAKE 345KV CKT 1'	717	0.052	105.22	'GEN335831 1-RIVERBEND UNIT#1'
12WP	00NR	0	'FROM->TO'	G11_050	'CIMARRON - DRAPER LAKE 345KV CKT 1'	717	0.052	104.59	'GEN515041 1-SEMINOLE 2G'
12WP	00NR	0	'FROM->TO'	G11_050	'CIMARRON - DRAPER LAKE 345KV CKT 1'	717	0.052	104.30	'GEN501801 1-DOLET HILLS UNIT1'
12WP	00NR	0	'FROM->TO'	G11_050	'CIMARRON - DRAPER LAKE 345KV CKT 1'	717	0.052	104.15	'GEN337910 1-ARKANSAS NUCLEAR ONE UNIT #1'
12WP	00NR	0	'FROM->TO'	G11_050	'CIMARRON - DRAPER LAKE 345KV CKT 1'	717	0.052	103.74	'GEN520947 1-HUGO1'
13WP	00NR	0	'FROM->TO'	G11_050	'CIMARRON - DRAPER LAKE 345KV CKT 1'	717	0.052	103.53	'MEMORIAL - SKYLINE 138KV CKT 1'
13WP	00NR	0	'FROM->TO'	G11_050	'CIMARRON - DRAPER LAKE 345KV CKT 1'	717	0.052	103.26	'TULSA NORTH - WEKIWA 345KV CKT 1'
12WP	00NR	0	'FROM->TO'	G11_050	'CIMARRON - DRAPER LAKE 345KV CKT 1'	717	0.052	103.26	'GEN337652 1-WHITE BLUFF UNIT #1'
12WP	00NR	0	'FROM->TO'	G11_050	'CIMARRON - DRAPER LAKE 345KV CKT 1'	717	0.052	102.89	'GEN509403 1-PIRKEY GENERATION'
12WP	00NR	0	'FROM->TO'	G11_050	'CIMARRON - DRAPER LAKE 345KV CKT 1'	717	0.052	102.89	'GEN509416 1-TURK GENERATION'
12WP	00NR	0	'FROM->TO'	G11_050	'CIMARRON - DRAPER LAKE 345KV CKT 1'	717	0.052	102.70	'GEN336252 1-NINEMILE POINT UNIT#5'
12WP	00NR	0	'FROM->TO'	G11_050	'CIMARRON - DRAPER LAKE 345KV CKT 1'	717	0.052	102.68	'GEN338146 1-INDEPENDENCE UNIT #2'
12WP	00NR	0	'FROM->TO'	G11_050	'CIMARRON - DRAPER LAKE 345KV CKT 1'	717	0.052	102.67	'GEN515040 1-SEMINOLE 1G'
12WP	00NR	0	'FROM->TO'	G11_050	'CIMARRON - DRAPER LAKE 345KV CKT 1'	717	0.052	102.66	'GEN336251 1-NINEMILE POINT UNIT#4'
12WP	00NR	0	'FROM->TO'	G11_050	'CIMARRON - DRAPER LAKE 345KV CKT 1'	717	0.052	102.60	'GEN501813 1-RODEMACHER UNIT 3'
12WP	00NR	0	'FROM->TO'	G11_050	'CIMARRON - DRAPER LAKE 345KV CKT 1'	717	0.052	102.51	'GEN338143 1-INDEPENDENCE UNIT #1'
12WP	00NR	0	'FROM->TO'	G11_050	'CIMARRON - DRAPER LAKE 345KV CKT 1'	717	0.052	102.49	'GEN337041 1-GERALD ANDRUS'
12WP	00NR	0	'FROM->TO'	G11_050	'CIMARRON - DRAPER LAKE 345KV CKT 1'	717	0.052	102.45	'GEN337653 1-WHITE BLUFF UNIT #2'
12WP	00NR	0	'FROM->TO'	G11_050	'CIMARRON - DRAPER LAKE 345KV CKT 1'	717	0.052	101.98	'GEN501812 1-RODEMACHER UNIT 2'

SEASON	GROUP	SCENARIO	DIRECTION	SOURCE	MONITORED ELEMENT	RATE B (MVA)	TDF	(%MVA) LOADING	CONTINGENCY
12WP	00NR	0	'FROM->TO'	G11_050	'CIMARRON - DRAPER LAKE 345KV CKT 1'	717	0.052	101.96	'GEN509406 1-WELSH #3'
12WP	00NR	0	'FROM->TO'	G11_050	'CIMARRON - DRAPER LAKE 345KV CKT 1'	717	0.052	101.96	'GEN509405 1-WELSH #2'
12WP	00NR	0	'FROM->TO'	G11_050	'CIMARRON - DRAPER LAKE 345KV CKT 1'	717	0.052	101.96	'GEN509404 1-WELSH #1'
12WP	00NR	0	'FROM->TO'	G11_050	'CIMARRON - DRAPER LAKE 345KV CKT 1'	717	0.052	101.85	'GEN335206 1-NELSON UNIT 6'
13WP	00NR	0	'FROM->TO'	G11_050	'CIMARRON - DRAPER LAKE 345KV CKT 1'	717	0.052	101.71	'ARKANSAS NUCLEAR ONE - PLEASANT HILL 500KV CKT 1'
12WP	00NR	0	'FROM->TO'	G11_050	'CIMARRON - DRAPER LAKE 345KV CKT 1'	717	0.052	101.64	'GEN336831 1-BAXTER WILSON SES'
12WP	00NR	0	'FROM->TO'	G11_050	'CIMARRON - DRAPER LAKE 345KV CKT 1'	717	0.052	101.61	'GEN334440 1-SABINE UNIT 4'
12WP	00NR	0	'FROM->TO'	G11_050	'CIMARRON - DRAPER LAKE 345KV CKT 1'	717	0.052	101.61	'GEN515226 1-MUSKOGEE 6G'
12WP	00NR	0	'FROM->TO'	G11_050	'CIMARRON - DRAPER LAKE 345KV CKT 1'	717	0.052	101.42	'GEN338388 1-1PLUMPT 23.000'
12WP	00NR	0	'FROM->TO'	G11_050	'CIMARRON - DRAPER LAKE 345KV CKT 1'	717	0.052	101.22	'GEN515225 1-MUSKOGEE 5G'
12WP	00NR	0	'FROM->TO'	G11_050	'CIMARRON - DRAPER LAKE 345KV CKT 1'	717	0.052	101.22	'GEN515223 1-MUSKOGEE 4G'
12WP	00NR	0	'FROM->TO'	G11_050	'CIMARRON - DRAPER LAKE 345KV CKT 1'	717	0.052	101.19	'GEN335204 1-NELSON UNIT 4'
12WP	00NR	0	'FROM->TO'	G11_050	'CIMARRON - DRAPER LAKE 345KV CKT 1'	717	0.052	101.11	'GEN334433 1-SABINE UNIT 3'
12WP	00NR	0	'FROM->TO'	G11_050	'CIMARRON - DRAPER LAKE 345KV CKT 1'	717	0.052	101.11	'GEN336801 1-BAXTER WILSON UNIT #1'
12WP	00NR	0	'FROM->TO'	G11_050	'CIMARRON - DRAPER LAKE 345KV CKT 1'	717	0.052	101.11	'GEN334441 1-SABINE UNIT 5'
12WP	00NR	0	'FROM->TO'	G11_050	'CIMARRON - DRAPER LAKE 345KV CKT 1'	717	0.052	100.00	'GEN336170 1-GULF OXY U4'
13WP	00NR	0	'FROM->TO'	G11_050	'CIMARRON - DRAPER LAKE 345KV CKT 1'	717	0.052	103.08	'LONEOAK - NORTHWEST 138KV CKT 1'
13WP	00NR	0	'FROM->TO'	G11_050	'CIMARRON - DRAPER LAKE 345KV CKT 1'	717	0.052	102.94	'LONEOAK - QUAIL CREEK 138KV CKT 1'
13WP	00NR	0	'FROM->TO'	G11_050	'CIMARRON - DRAPER LAKE 345KV CKT 1'	717	0.052	102.81	'CHERRY CREEK - PLEASANT VALLEY 138KV CKT 1'
13WP	00NR	0	'FROM->TO'	G11_050	'CIMARRON - DRAPER LAKE 345KV CKT 1'	717	0.052	102.74	'EL RENO SW - MUSTANG 69KV CKT 1'
13WP	00NR	0	'FROM->TO'	G11_050	'CIMARRON - DRAPER LAKE 345KV CKT 1'	717	0.052	102.68	'BOYD - CHERRY CREEK 138KV CKT 1'
13WP	00NR	0	'FROM->TO'	G11_050	'CIMARRON - DRAPER LAKE 345KV CKT 1'	717	0.052	103.87	'NORTHEAST STATION - ONETA 345KV CKT 1'
13WP	00NR	0	'FROM->TO'	G11_050	'CIMARRON - DRAPER LAKE 345KV CKT 1'	717	0.052	102.91	'ANADARKO - GEORGIA 138KV CKT 1'
13WP	00NR	0	'FROM->TO'	G11_050	'CIMARRON - DRAPER LAKE 345KV CKT 1'	717	0.052	102.87	'FLETCHER - GEORGIA 138KV CKT 1'
13WP	00NR	0	'FROM->TO'	G11_050	'CIMARRON - DRAPER LAKE 345KV CKT 1'	717	0.052	102.95	'MARSHALL - WOODRING 138KV CKT 1'
13WP	00NR	0	'FROM->TO'	G11_050	'CIMARRON - DRAPER LAKE 345KV CKT 1'	717	0.052	102.95	'COTTONWOOD CREEK - MARSHALL 138KV CKT 1'
13WP	00NR	0	'FROM->TO'	G11_050	'CIMARRON - DRAPER LAKE 345KV CKT 1'	717	0.052	103.04	'KETCH - KETCH TAP 138KV CKT 1'
13WP	00NR	0	'FROM->TO'	G11_050	'CIMARRON - DRAPER LAKE 345KV CKT 1'	717	0.052	101.50	'DBL-HTCH-BVR'
13WP	00NR	0	'FROM->TO'	G11_050	'CIMARRON - DRAPER LAKE 345KV CKT 1'	717	0.052	100.00	'CHAMBER SPRINGS - CLARKSVILLE 345KV CKT 1'
13WP	00NR	0	'FROM->TO'	G11_050	'CIMARRON - DRAPER LAKE 345KV CKT 1'	717	0.052	101.74	'BORDER 7345.00 - WOODWARD DISTRICT EHV 345KV CKT 1'
13WP	00NR	0	'FROM->TO'	G11_050	'CIMARRON - DRAPER LAKE 345KV CKT 1'	717	0.052	102.73	'EMPIRE - FLETCHER 138KV CKT 1'
13WP	00NR	0	'FROM->TO'	G11_050	'CIMARRON - DRAPER LAKE 345KV CKT 1'	717	0.052	102.68	'COMANCHE - EMPIRE 138KV CKT 1'
13WP	00NR	0	'FROM->TO'	G11_050	'CIMARRON - DRAPER LAKE 345KV CKT 1'	717	0.052	101.73	'MUSKOGEE - PECAN CREEK 345KV CKT 2'
13WP	00NR	0	'FROM->TO'	G11_050	'CIMARRON - DRAPER LAKE 345KV CKT 1'	717	0.052	101.58	'WELSH - WILKES 345KV CKT 1'
13WP	00NR	0	'FROM->TO'	G11_050	'CIMARRON - DRAPER LAKE 345KV CKT 1'	717	0.052	104.00	'ARCADIA - KAMO MEMORIAL 138KV CKT 1'
13WP	00NR	0	'FROM->TO'	G11_050	'CIMARRON - DRAPER LAKE 345KV CKT 1'	717	0.052	101.64	'PENNSYLVANIA - WESTMOORE 138KV CKT 1'
13WP	00NR	0	'FROM->TO'	G11_050	'CIMARRON - DRAPER LAKE 345KV CKT 1'	717	0.052	101.46	'WESTMOORE - WILROGR4 138KV CKT 1'
13WP	00NR	0	'FROM->TO'	G11_050	'CIMARRON - DRAPER LAKE 345KV CKT 1'	717	0.052	102.94	'DIVISION AVE - MUSTANG 138KV CKT 1'
13WP	00NR	0	'FROM->TO'	G11_050	'CIMARRON - DRAPER LAKE 345KV CKT 1'	717	0.052	104.10	'OGE3TERM14'
13WP	00NR	0	'FROM->TO'	G11_050	'CIMARRON - DRAPER LAKE 345KV CKT 1'	717	0.052	102.96	'NORTHWEST - PANTHER 138KV CKT 1'
13WP	00NR	0	'FROM->TO'	G11_050	'CIMARRON - DRAPER LAKE 345KV CKT 1'	717	0.052	102.95	'ARCADIA - OMPA-EDMOND GARBER(LAKE) 138KV CKT 1'
13WP	00NR	0	'FROM->TO'	G11_050	'CIMARRON - DRAPER LAKE 345KV CKT 1'	717	0.052	102.92	'PANTHER - SILVER LAKE 138KV CKT 1'
13WP	00NR	0	'FROM->TO'	G11_050	'CIMARRON - DRAPER LAKE 345KV CKT 1'	717	0.052	102.88	'CHITWOOD - OMPA-EDMOND GARBER(LAKE) 138KV CKT 1'
13WP	00NR	0	'FROM->TO'	G11_050	'CIMARRON - DRAPER LAKE 345KV CKT 1'	717	0.052	102.86	'CHITWOOD - JONES TAP 138KV CKT 1'
13WP	00NR	0	'FROM->TO'	G11_050	'CIMARRON - DRAPER LAKE 345KV CKT 1'	717	0.052	103.31	'OGE3TERM20'
13WP	00NR	0	'FROM->TO'	G11_050	'CIMARRON - DRAPER LAKE 345KV CKT 1'	717	0.052	104.85	'NORTHWEST (NORTWST3) 345/138/13.8KV TRANSFORMER CKT 1'
13WP	00NR	0	'FROM->TO'	G11_050	'CIMARRON - DRAPER LAKE 345KV CKT 1'	717	0.051	105.59	'NORTHWEST (NORTWST2) 345/138/13.8KV TRANSFORMER CKT 1'
12WP	00NR	0	'FROM->TO'	G11_050	'CIMARRON - DRAPER LAKE 345KV CKT 1'	717	0.051	100.80	'NORTHWEST (NORTWST3) 345/138/13.8KV TRANSFORMER CKT 1'
17WP	00NR	0	'FROM->TO'	G11_050	'CIMARRON - DRAPER LAKE 345KV CKT 1'	717	0.051	101.14	'MATTHEWSON 345.00 - NORTHWEST 345KV CKT 1'
12WP	00NR	0	'FROM->TO'	G11_050	'CIMARRON - DRAPER LAKE 345KV CKT 1'	717	0.051	101.59	'NORTHWEST (NORTWST2) 345/138/13.8KV TRANSFORMER CKT 1'
13WP	00NR	0	'FROM->TO'	G11_050	'CIMARRON - DRAPER LAKE 345KV CKT 1'	717	0.051	101.69	'FOREST HILL - SQUIRL CREEK 138KV CKT 1'
13WP	00NR	0	'FROM->TO'	G11_050	'CIMARRON - DRAPER LAKE 345KV CKT 1'	717	0.051	103.68	'HORSESHOE LAKE - KAMO MEMORIAL 138KV CKT 1'
13WP	00NR	0	'FROM->TO'	G11_050	'CIMARRON - DRAPER LAKE 345KV CKT 1'	717	0.051	101.47	'SPP-AEPW-04'
13WP	00NR	0	'FROM->TO'	G11_050	'CIMARRON - DRAPER LAKE 345KV CKT 1'	717	0.051	101.36	'FOREST HILL - MAUD 138KV CKT 1'
13WP	00NR	0	'FROM->TO'	G11_050	'CIMARRON - DRAPER LAKE 345KV CKT 1'	717	0.051	101.55	'DISCVRY - FOSTER 138KV CKT 1'
13WP	00NR	0	'FROM->TO'	G11_050	'CIMARRON - DRAPER LAKE 345KV CKT 1'	717	0.051	101.38	'DISCVRY - OAKCREEK 138KV CKT 1'
13WP	00NR	0	'FROM->TO'	G11_050	'CIMARRON - DRAPER LAKE 345KV CKT 1'	717	0.051	101.49	'FIXICO TAP - MAUD 138KV CKT 1'
13WP	00NR	0	'FROM->TO'	G11_050	'CIMARRON - DRAPER LAKE 345KV CKT 1'	717	0.051	101.78	'PECAN CREEK - RIVERSIDE STATION 345KV CKT 1'
13WP	00NR	0	'FROM->TO'	G11_050	'CIMARRON - DRAPER LAKE 345KV CKT 1'	717	0.051	103.95	'LAWTON EASTSIDE - OKLAUNION 345KV CKT 1'
13WP	00NR	0	'FROM->TO'	G11_050	'CIMARRON - DRAPER LAKE 345KV CKT 1'	717	0.051	103.23	'G05-15T 345.00 - OKLAUNION 345KV CKT 1'
13WP	00NR	0	'FROM->TO'	G11_050	'CIMARRON - DRAPER LAKE 345KV CKT 1'	717	0.051	103.13	'G05-15T 345.00 - TUCO INTERCHANGE 345KV CKT 1'
12WP	00NR	0	'FROM->TO'	G11_050	'CIMARRON - DRAPER LAKE 345KV CKT 1'	717	0.051	100.00	'LAWTON EASTSIDE - OKLAUNION 345KV CKT 1'
13WP	00NR	0	'FROM->TO'	G11_050	'CIMARRON - DRAPER LAKE 345KV CKT 1'	717	0.051	100.76	'FT SMITH - MUSKOGEE 345KV CKT 1'
13WP	00NR	0	'FROM->TO'	G11_050	'CIMARRON - DRAPER LAKE 345KV CKT 1'	717	0.051	101.78	'FIXICO TAP - WELEETKA 138KV CKT 1'
17WP	00NR	0	'FROM->TO'	G11_050	'CIMARRON - DRAPER LAKE 345KV CKT 1'	717	0.050	104.31	'ARCADIA - HORSESHOE LAKE 345KV CKT 1'
17WP	00NR	0	'FROM->TO'	G11_050	'CIMARRON - DRAPER LAKE 345KV CKT 1'	717	0.050	104.31	'HORSESHOE LAKE - SEMINOLE 345KV CKT 1'
13WP	00NR	0	'FROM->TO'	G11_050	'CIMARRON - DRAPER LAKE 345KV CKT 1'	717	0.050	101.54	'OGE3TERM36'
13WP	00NR	0	'FROM->TO'	G11_050	'CIMARRON - DRAPER LAKE 345KV CKT 1'	717	0.050	101.26	'NORTHWEST TEXARKANA - VALLIANT 345KV CKT 1'
13WP	00NR	0	'FROM->TO'	G11_050	'CIMARRON - DRAPER LAKE 345KV CKT 1'	717	0.050	101.09	'FRANKLIN - PINK SW 138KV CKT 1'
13WP	00NR	0	'FROM->TO'	G11_050	'CIMARRON - DRAPER LAKE 345KV CKT 1'	717	0.050	100.81	'FRANKLIN - FRANKLIN SW 138KV CKT 1'
13WP	00NR	0	'FROM->TO'	G11_050	'CIMARRON - DRAPER LAKE 345KV CKT 1'	717	0.050	102.86	'CLARKSVILLE - ONETA 345KV CKT 1'
17WP	00NR	0	'FROM->TO'	G11_050	'CIMARRON - DRAPER LAKE 345KV CKT 1'	717	0.049	101.05	'GEN336821 1-GRAND GULF UNIT'
17WP	00NR	0	'FROM->TO'	G11_050	'CIMARRON - DRAPER LAKE 345KV CKT 1'	717	0.049	100.72	'GEN336153 1-WATERFORD UNIT#3'
13WP	00NR	0	'FROM->TO'	G11_050	'CIMARRON - DRAPER LAKE 345KV CKT 1'	717	0.049	101.12	'LYDIA - WELSH 345KV CKT 1'
13WP	00NR	0	'FROM->TO'	G11_050	'CIMARRON - DRAPER LAKE 345KV CKT 1'	717	0.049	103.60	'CANADIAN RIVER - MUSKOGEE 345KV CKT 1'
13WP	00NR	0	'FROM->TO'	G11_050	'CIMARRON - DRAPER LAKE 345KV CKT 1'	717	0.049	100.59	'LYDIA - VALLIANT 345KV CKT 1'
13WP	00NR	0	'FROM->TO'	G11_050	'CIMARRON - DRAPER LAKE 345KV CKT 1'	717	0.048	100.00	'DRAPER LAKE - SEMINOLE 345KV CKT 3'
13WP	00NR	0	'FROM->TO'	G11_050	'CIMARRON - DRAPER LAKE 345KV CKT 1'	717	0.047	100.20	'SPP-AEPW-01'

SEASON	GROUP	SCENARIO	DIRECTION	SOURCE	MONITORED ELEMENT	RATE B (MVA)	TDF	(%MVA) LOADING	CONTINGENCY
12WP	00NR	0	'FROM->TO'	G11_050	'CIMARRON - CZECH HALL 138KV CKT 1'	382	0.047	100.76	'CIMARRON - HAYMAKER 138KV CKT 1'
13WP	00NR	0	'FROM->TO'	G11_050	'CIMARRON - DRAPER LAKE 345KV CKT 1'	717	0.046	107.39	'CIMARRON (CIMARON2) 345/138/13.8KV TRANSFORMER CKT 1'
12WP	00NR	0	'FROM->TO'	G11_050	'CIMARRON - DRAPER LAKE 345KV CKT 1'	717	0.046	103.53	'CIMARRON (CIMARON2) 345/138/13.8KV TRANSFORMER CKT 1'
13WP	00NR	0	'FROM->TO'	G11_050	'CIMARRON - DRAPER LAKE 345KV CKT 1'	717	0.046	107.59	'CIMARRON (CIMARON1) 345/138/13.8KV TRANSFORMER CKT 1'
12WP	00NR	0	'FROM->TO'	G11_050	'CIMARRON - DRAPER LAKE 345KV CKT 1'	717	0.046	103.74	'CIMARRON (CIMARON1) 345/138/13.8KV TRANSFORMER CKT 1'
17SP	00NR	0	'TO->FROM'	G11_050	'BENTON - WICHITA 345KV CKT 1'	956	0.041	108.74	'GEN532751 1-WOLF CREEK GENERATING STATION UNIT 1'
17SP	00NR	0	'FROM->TO'	G11_050	'LAWEASOKLUNI'	425	0.040	129.70	'BASE CASE'
17WP	00NR	0	'FROM->TO'	G11_050	'LAWEASOKLUNI'	425	0.040	160.40	'BASE CASE'
13SP	00NR	0	'FROM->TO'	G11_050	'LAWEASOKLUNI'	425	0.040	124.20	'BASE CASE'
12SP	00NR	0	'FROM->TO'	G11_050	'LAWEASOKLUNI'	425	0.039	124.60	'BASE CASE'
17WP	00NR	0	'TO->FROM'	G11_050	'BENTON - WICHITA 345KV CKT 1'	956	0.039	106.16	'GEN532751 1-WOLF CREEK GENERATING STATION UNIT 1'
13WP	00NR	0	'FROM->TO'	G11_050	'LAWEASOKLUNI'	425	0.039	171.60	'BASE CASE'
12WP	00NR	0	'TO->FROM'	G11_050	'BENTON - WICHITA 345KV CKT 1'	956	0.039	111.25	'GEN532751 1-WOLF CREEK GENERATING STATION UNIT 1'
13WP	00NR	0	'TO->FROM'	G11_050	'BENTON - WICHITA 345KV CKT 1'	956	0.039	109.79	'GEN532751 1-WOLF CREEK GENERATING STATION UNIT 1'
12WP	00NR	0	'FROM->TO'	G11_050	'LAWEASOKLUNI'	425	0.039	172.60	'BASE CASE'
13WP	00NR	0	'FROM->TO'	G11_050	'CIMARRON - DRAPER LAKE 345KV CKT 1'	717	0.038	102.98	'GRACEMONT (BANK 1) 345/138/13.8KV TRANSFORMER CKT 1'
12WP	00NR	0	'TO->FROM'	G11_050	'BENTON - WICHITA 345KV CKT 1'	956	0.035	108.26	'DBL-MATT-TAT'
13WP	00NR	0	'TO->FROM'	G11_050	'BENTON - WICHITA 345KV CKT 1'	956	0.035	105.51	'DBL-MATT-TAT'
12SP	00NR	0	'TO->FROM'	G11_050	'BENTON - WICHITA 345KV CKT 1'	956	0.035	100.67	'DBL-MATT-TAT'
12G	03ALL	0		G11_050	NCONV-Iteration Limit	0	0.022	9999.00	'DBL-WICH-THI'
12G	03ALL2	0		G11_050	NCONV-Blown Up	0	0.022	9999.00	'DBL-WICH-THI'
12G	03ALL	0		G11_050	NCONV-Iteration Limit	1792	0.018	47.07	'G11-17T 345.00 - POST ROCK 345KV CKT 1'
12WP	00NR	2	'TO->FROM'	G11_050	'COMANCHE - COMANCHE TAP 69KV CKT 1'	48	0.208	101.17	'G11_050T 138.00 - RUSH SPRINGS TAP 138KV CKT 1'
13WP	00NR	2	'FROM->TO'	G11_050	'CIMARRON - DRAPER LAKE 345KV CKT 1'	717	0.093	127.80	'LAWTON EASTSIDE - SUNNYSIDE 345KV CKT 1'
12WP	00NR	2	'FROM->TO'	G11_050	'CIMARRON - DRAPER LAKE 345KV CKT 1'	717	0.093	123.43	'LAWTON EASTSIDE - SUNNYSIDE 345KV CKT 1'
17WP	00NR	2	'FROM->TO'	G11_050	'CIMARRON - DRAPER LAKE 345KV CKT 1'	717	0.090	115.56	'LAWTON EASTSIDE - SUNNYSIDE 345KV CKT 1'
13WP	00NR	2	'FROM->TO'	G11_050	'CORN TAP - PAOLI 138KV CKT 1'	143	0.082	102.70	'LAWTON EASTSIDE - SUNNYSIDE 345KV CKT 1'
12WP	00NR	2	'FROM->TO'	G11_050	'CORN TAP - PAOLI 138KV CKT 1'	143	0.082	104.03	'LAWTON EASTSIDE - SUNNYSIDE 345KV CKT 1'
12WP	00NR	2	'FROM->TO'	G11_050	'CIMARRON - DRAPER LAKE 345KV CKT 1'	717	0.071	119.41	'ARCADIA - NORTHWEST 345KV CKT 1'
13WP	00NR	2	'FROM->TO'	G11_050	'CIMARRON - DRAPER LAKE 345KV CKT 1'	717	0.070	124.03	'ARCADIA - NORTHWEST 345KV CKT 1'
17WP	00NR	2	'FROM->TO'	G11_050	'CIMARRON - DRAPER LAKE 345KV CKT 1'	717	0.066	110.71	'ARCADIA - NORTHWEST 345KV CKT 1'
13WP	00NR	2	'FROM->TO'	G11_050	'CIMARRON - DRAPER LAKE 345KV CKT 1'	717	0.066	108.64	'BLANCHARD - CORNVILLE 138KV CKT 1'
13WP	00NR	2	'FROM->TO'	G11_050	'CIMARRON - DRAPER LAKE 345KV CKT 1'	717	0.066	108.44	'BLANCHARD - MAUD 138KV CKT 1'
12WP	00NR	2	'FROM->TO'	G11_050	'CIMARRON - DRAPER LAKE 345KV CKT 1'	717	0.066	104.36	'BLANCHARD - CORNVILLE 138KV CKT 1'
12WP	00NR	2	'FROM->TO'	G11_050	'CIMARRON - DRAPER LAKE 345KV CKT 1'	717	0.066	104.16	'BLANCHARD - MAUD 138KV CKT 1'
13WP	00NR	2	'TO->FROM'	G11_050	'COMANCHE - COMANCHE TAP 69KV CKT 1'	48	0.066	100.72	'ANADARKO - GEORGIA 138KV CKT 1'
12WP	00NR	2	'TO->FROM'	G11_050	'COMANCHE - COMANCHE TAP 69KV CKT 1'	48	0.066	104.76	'ANADARKO - GEORGIA 138KV CKT 1'
12WP	00NR	2	'TO->FROM'	G11_050	'COMANCHE - COMANCHE TAP 69KV CKT 1'	48	0.066	102.47	'FLETCHER - GEORGIA 138KV CKT 1'
12WP	00NR	2	'FROM->TO'	G11_050	'DUNCAN - TOSCO 69KV CKT 1'	53	0.066	102.17	'ANADARKO - GEORGIA 138KV CKT 1'
12WP	00NR	2	'FROM->TO'	G11_050	'DUNCAN - TOSCO 69KV CKT 1'	53	0.066	100.08	'FLETCHER - GEORGIA 138KV CKT 1'
12WP	00NR	2	'TO->FROM'	G11_050	'COMANCHE - COMANCHE TAP 69KV CKT 1'	48	0.065	102.33	'EMPIRE - FLETCHER 138KV CKT 1'
12WP	00NR	2	'FROM->TO'	G11_050	'DUNCAN - TOSCO 69KV CKT 1'	53	0.065	100.06	'EMPIRE - FLETCHER 138KV CKT 1'
12WP	00NR	2	'FROM->TO'	G11_050	'CIMARRON - DRAPER LAKE 345KV CKT 1'	717	0.065	114.88	'CLEVELAND - SOONER 345KV CKT 1'
13WP	00NR	2	'FROM->TO'	G11_050	'CIMARRON - DRAPER LAKE 345KV CKT 1'	717	0.064	118.95	'CLEVELAND - SOONER 345KV CKT 1'
12WP	00NR	2	'FROM->TO'	G11_050	'CIMARRON - DRAPER LAKE 345KV CKT 1'	717	0.063	105.74	'CIMARRON - NORTHWEST 345KV CKT 1'
13WP	00NR	2	'FROM->TO'	G11_050	'CIMARRON - DRAPER LAKE 345KV CKT 1'	717	0.063	109.95	'CIMARRON - NORTHWEST 345KV CKT 1'
13WP	00NR	2	'FROM->TO'	G11_050	'CIMARRON - DRAPER LAKE 345KV CKT 1'	717	0.062	108.80	'SUNSHINE CANYON - WESTMOORE 138KV CKT 1'
13WP	00NR	2	'FROM->TO'	G11_050	'CIMARRON - DRAPER LAKE 345KV CKT 1'	717	0.062	108.18	'FRANKLIN SW - WESTMOORE 138KV CKT 1'
12WP	00NR	2	'FROM->TO'	G11_050	'CIMARRON - DRAPER LAKE 345KV CKT 1'	717	0.062	104.64	'SUNSHINE CANYON - WESTMOORE 138KV CKT 1'
12WP	00NR	2	'FROM->TO'	G11_050	'CIMARRON - DRAPER LAKE 345KV CKT 1'	717	0.062	104.00	'FRANKLIN SW - WESTMOORE 138KV CKT 1'
13WP	00NR	2	'FROM->TO'	G11_050	'CIMARRON - DRAPER LAKE 345KV CKT 1'	717	0.061	109.68	'MATTHEWSON 345.00 - WOODRING 345KV CKT 1'
13WP	00NR	2	'FROM->TO'	G11_050	'CIMARRON - DRAPER LAKE 345KV CKT 1'	717	0.061	110.50	'ANADARKO - POCASSETT 138KV CKT 1'
13WP	00NR	2	'FROM->TO'	G11_050	'CIMARRON - DRAPER LAKE 345KV CKT 1'	717	0.061	110.33	'POCASSETT - TUTTLE 138KV CKT 1'
13WP	00NR	2	'FROM->TO'	G11_050	'CIMARRON - DRAPER LAKE 345KV CKT 1'	717	0.061	109.89	'SUNSHINE CANYON - TUTTLE 138KV CKT 1'
17WP	00NR	2	'FROM->TO'	G11_050	'CIMARRON - DRAPER LAKE 345KV CKT 1'	717	0.061	108.45	'CLEVELAND - SOONER 345KV CKT 1'
12WP	00NR	2	'FROM->TO'	G11_050	'CIMARRON - DRAPER LAKE 345KV CKT 1'	717	0.061	106.34	'ANADARKO - POCASSETT 138KV CKT 1'
12WP	00NR	2	'FROM->TO'	G11_050	'CIMARRON - DRAPER LAKE 345KV CKT 1'	717	0.061	106.17	'POCASSETT - TUTTLE 138KV CKT 1'
12WP	00NR	2	'FROM->TO'	G11_050	'CIMARRON - DRAPER LAKE 345KV CKT 1'	717	0.061	105.73	'SUNSHINE CANYON - TUTTLE 138KV CKT 1'
12WP	00NR	2	'FROM->TO'	G11_050	'CIMARRON - DRAPER LAKE 345KV CKT 1'	717	0.061	105.74	'MATTHEWSON 345.00 - WOODRING 345KV CKT 1'
12WP	00NR	2	'FROM->TO'	G11_050	'CIMARRON - DRAPER LAKE 345KV CKT 1'	717	0.061	109.89	'CLEVELAND - TULSA NORTH 345KV CKT 1'
13WP	00NR	2	'FROM->TO'	G11_050	'CIMARRON - DRAPER LAKE 345KV CKT 1'	717	0.061	102.40	'OGE3TERM21'
13WP	00NR	2	'FROM->TO'	G11_050	'CIMARRON - DRAPER LAKE 345KV CKT 1'	717	0.061	114.10	'CLEVELAND - TULSA NORTH 345KV CKT 1'
13WP	00NR	2	'FROM->TO'	G11_050	'CIMARRON - DRAPER LAKE 345KV CKT 1'	717	0.061	102.54	'DRAPER LAKE - MIDWEST TAP 138KV CKT 1'
12WP	00NR	2	'FROM->TO'	G11_050	'CIMARRON - DRAPER LAKE 345KV CKT 1'	717	0.060	103.88	'JOHNSON COUNTY - PITTSBURG 345KV CKT 1'
17WP	00NR	2	'FROM->TO'	G11_050	'CIMARRON - DRAPER LAKE 345KV CKT 1'	717	0.060	100.67	'CIMARRON - NORTHWEST 345KV CKT 1'
13WP	00NR	2	'FROM->TO'	G11_050	'CIMARRON - DRAPER LAKE 345KV CKT 1'	717	0.059	108.43	'JOHNSON COUNTY - PITTSBURG 345KV CKT 1'
17WP	00NR	2	'FROM->TO'	G11_050	'CIMARRON - DRAPER LAKE 345KV CKT 1'	717	0.058	100.11	'MATTHEWSON 345.00 - WOODRING 345KV CKT 1'
12WP	00NR	2	'FROM->TO'	G11_050	'CIMARRON - DRAPER LAKE 345KV CKT 1'	717	0.058	104.33	'NORTHWEST - SPRING CREEK 345KV CKT 1'
12WP	00NR	2	'FROM->TO'	G11_050	'CIMARRON - DRAPER LAKE 345KV CKT 1'	717	0.058	104.29	'SOONER - SPRING CREEK 345KV CKT 1'
13WP	00NR	2	'FROM->TO'	G11_050	'CIMARRON - DRAPER LAKE 345KV CKT 1'	717	0.058	108.87	'CORN TAP - PAOLI 138KV CKT 1'
12WP	00NR	2	'FROM->TO'	G11_050	'CIMARRON - DRAPER LAKE 345KV CKT 1'	717	0.058	104.63	'CORN TAP - PAOLI 138KV CKT 1'
17WP	00NR	2	'FROM->TO'	G11_050	'CIMARRON - DRAPER LAKE 345KV CKT 1'	717	0.057	103.96	'CLEVELAND - TULSA NORTH 345KV CKT 1'
12WP	00NR	2	'FROM->TO'	G11_050	'CIMARRON - DRAPER LAKE 345KV CKT 1'	717	0.057	105.49	'JOHNSON COUNTY - SUNNYSIDE 345KV CKT 1'
13WP	00NR	2	'FROM->TO'	G11_050	'CIMARRON - DRAPER LAKE 345KV CKT 1'	717	0.057	109.90	'JOHNSON COUNTY - SUNNYSIDE 345KV CKT 1'
17WP	00NR	2	'FROM->TO'	G11_050	'CIMARRON - DRAPER LAKE 345KV CKT 1'	717	0.057	100.22	'ANADARKO - BLANCHARD 138KV CKT 1'
12WP	00NR	2	'FROM->TO'	G11_050	'CIMARRON - DRAPER LAKE 345KV CKT 1'	717	0.057	106.08	'REDBUD - RIVERSIDE STATION 345KV CKT 1'
13WP	00NR	2	'FROM->TO'	G11_050	'CIMARRON - DRAPER LAKE 345KV CKT 1'	717	0.056	110.11	'REDBUD - RIVERSIDE STATION 345KV CKT 1'
12WP	00NR	2	'FROM->TO'	G11_050	'CIMARRON - DRAPER LAKE 345KV CKT 1'	717	0.056	100.98	'FRANKLIN SW - MIDWEST TAP 138KV CKT 1'

SEASON	GROUP	SCENARIO	DIRECTION	SOURCE	MONITORED ELEMENT	RATE B (MVA)	TDF	(%MVA) LOADING	CONTINGENCY
13WP	00NR	2	'FROM->TO'	G11_050	'CIMARRON - DRAPER LAKE 345KV CKT 1'	717	0.056	105.28	'FRANKLIN SW - MIDWEST TAP 138KV CKT 1'
13WP	00NR	2	'FROM->TO'	G11_050	'CIMARRON - DRAPER LAKE 345KV CKT 1'	717	0.056	108.23	'CIVIT - PAOLI 138KV CKT 1'
13WP	00NR	2	'FROM->TO'	G11_050	'CIMARRON - DRAPER LAKE 345KV CKT 1'	717	0.056	108.17	'CIVIT - STRATFORD 138KV CKT 1'
13WP	00NR	2	'FROM->TO'	G11_050	'CIMARRON - DRAPER LAKE 345KV CKT 1'	717	0.056	108.12	'OIL CENTER - STRATFORD 138KV CKT 1'
13WP	00NR	2	'FROM->TO'	G11_050	'CIMARRON - DRAPER LAKE 345KV CKT 1'	717	0.056	108.05	'LATTA JCT - OIL CENTER 138KV CKT 1'
13WP	00NR	2	'FROM->TO'	G11_050	'CIMARRON - DRAPER LAKE 345KV CKT 1'	717	0.056	107.91	'LASALLE - LATTA JCT 138KV CKT 1'
13WP	00NR	2	'FROM->TO'	G11_050	'CIMARRON - DRAPER LAKE 345KV CKT 1'	717	0.056	103.50	'CIMARRON - MATTHEWSON 345.00 345KV CKT 1'
17WP	00NR	2	'FROM->TO'	G11_050	'CIMARRON - DRAPER LAKE 345KV CKT 1'	717	0.056	100.00	'ANADARKO - POCASSETT 138KV CKT 1'
12WP	00NR	2	'FROM->TO'	G11_050	'CIMARRON - DRAPER LAKE 345KV CKT 1'	717	0.056	103.96	'CIVIT - PAOLI 138KV CKT 1'
12WP	00NR	2	'FROM->TO'	G11_050	'CIMARRON - DRAPER LAKE 345KV CKT 1'	717	0.056	103.91	'CIVIT - STRATFORD 138KV CKT 1'
12WP	00NR	2	'FROM->TO'	G11_050	'CIMARRON - DRAPER LAKE 345KV CKT 1'	717	0.056	103.86	'OIL CENTER - STRATFORD 138KV CKT 1'
12WP	00NR	2	'FROM->TO'	G11_050	'CIMARRON - DRAPER LAKE 345KV CKT 1'	717	0.056	103.79	'LATTA JCT - OIL CENTER 138KV CKT 1'
13WP	00NR	2	'FROM->TO'	G11_050	'CIMARRON - DRAPER LAKE 345KV CKT 1'	717	0.055	112.40	'CIMARRON - CZECH HALL 138KV CKT 1'
13WP	00NR	2	'FROM->TO'	G11_050	'CIMARRON - DRAPER LAKE 345KV CKT 1'	717	0.055	111.95	'CZECH HALL - XEROX 138KV CKT 1'
13WP	00NR	2	'FROM->TO'	G11_050	'CIMARRON - DRAPER LAKE 345KV CKT 1'	717	0.055	111.93	'MORGAN - XEROX 138KV CKT 1'
13WP	00NR	2	'FROM->TO'	G11_050	'CIMARRON - DRAPER LAKE 345KV CKT 1'	717	0.055	111.82	'MORGAN - MUSTANG 138KV CKT 1'
12WP	00NR	2	'FROM->TO'	G11_050	'CIMARRON - DRAPER LAKE 345KV CKT 1'	717	0.055	108.21	'CIMARRON - CZECH HALL 138KV CKT 1'
12WP	00NR	2	'FROM->TO'	G11_050	'CIMARRON - DRAPER LAKE 345KV CKT 1'	717	0.055	107.82	'CZECH HALL - XEROX 138KV CKT 1'
12WP	00NR	2	'FROM->TO'	G11_050	'CIMARRON - DRAPER LAKE 345KV CKT 1'	717	0.055	107.80	'MORGAN - XEROX 138KV CKT 1'
12WP	00NR	2	'FROM->TO'	G11_050	'CIMARRON - DRAPER LAKE 345KV CKT 1'	717	0.055	107.69	'MORGAN - MUSTANG 138KV CKT 1'
13WP	00NR	2	'FROM->TO'	G11_050	'CIMARRON - DRAPER LAKE 345KV CKT 1'	717	0.055	108.89	'HUGO - SUNNYSIDE 345KV CKT 1'
13WP	00NR	2	'FROM->TO'	G11_050	'CIMARRON - DRAPER LAKE 345KV CKT 1'	717	0.055	104.10	'CIMARRON - MATTHEWSON 345.00 345KV CKT 2'
12WP	00NR	2	'FROM->TO'	G11_050	'CIMARRON - DRAPER LAKE 345KV CKT 1'	717	0.055	104.61	'HUGO - SUNNYSIDE 345KV CKT 1'
13WP	00NR	2	'FROM->TO'	G11_050	'CIMARRON - DRAPER LAKE 345KV CKT 1'	717	0.055	113.01	'CIMARRON - SARA 138KV CKT 1'
13WP	00NR	2	'FROM->TO'	G11_050	'CIMARRON - DRAPER LAKE 345KV CKT 1'	717	0.055	111.75	'MCCLAIN - SARA 138KV CKT 1'
12WP	00NR	2	'FROM->TO'	G11_050	'CIMARRON - DRAPER LAKE 345KV CKT 1'	717	0.055	109.60	'CIMARRON - SARA 138KV CKT 1'
12WP	00NR	2	'FROM->TO'	G11_050	'CIMARRON - DRAPER LAKE 345KV CKT 1'	717	0.055	108.36	'MCCLAIN - SARA 138KV CKT 1'
13WP	00NR	2	'FROM->TO'	G11_050	'CIMARRON - DRAPER LAKE 345KV CKT 1'	717	0.055	111.40	'DBL-THIS-WWR'
13WP	00NR	2	'FROM->TO'	G11_050	'CIMARRON - DRAPER LAKE 345KV CKT 1'	717	0.055	108.00	'HEALDTON - LOCO 138KV CKT 1'
13WP	00NR	2	'FROM->TO'	G11_050	'CIMARRON - DRAPER LAKE 345KV CKT 1'	717	0.055	107.92	'HEALDTON - RINGLING 138KV CKT 1'
12WP	00NR	2	'FROM->TO'	G11_050	'CIMARRON - DRAPER LAKE 345KV CKT 1'	717	0.054	103.73	'HEALDTON - LOCO 138KV CKT 1'
13WP	00NR	2	'FROM->TO'	G11_050	'CIMARRON - DRAPER LAKE 345KV CKT 1'	717	0.054	109.10	'SOONER - WOODRING 345KV CKT 1'
12WP	00NR	2	'FROM->TO'	G11_050	'CIMARRON - DRAPER LAKE 345KV CKT 1'	717	0.054	104.95	'SOONER - WOODRING 345KV CKT 1'
13WP	00NR	2	'FROM->TO'	G11_050	'CIMARRON - DRAPER LAKE 345KV CKT 1'	717	0.054	104.91	'DRAPER LAKE (DRAPER2) 345/138/13.8KV TRANSFORMER CKT 1'
12WP	00NR	2	'FROM->TO'	G11_050	'CIMARRON - DRAPER LAKE 345KV CKT 1'	717	0.054	100.23	'DRAPER LAKE (DRAPER2) 345/138/13.8KV TRANSFORMER CKT 1'
12WP	00NR	2	'FROM->TO'	G11_050	'CIMARRON - DRAPER LAKE 345KV CKT 1'	717	0.054	100.00	'DRAPER LAKE (DRAPER3) 345/138/13.8KV TRANSFORMER CKT 1'
12WP	00NR	2	'FROM->TO'	G11_050	'CIMARRON - DRAPER LAKE 345KV CKT 1'	717	0.054	100.00	'DRAPER LAKE (DRAPER4) 345/138/13.8KV TRANSFORMER CKT 1'
13WP	00NR	2	'FROM->TO'	G11_050	'CIMARRON - DRAPER LAKE 345KV CKT 1'	717	0.054	104.73	'DRAPER LAKE (DRAPER3) 345/138/13.8KV TRANSFORMER CKT 1'
13WP	00NR	2	'FROM->TO'	G11_050	'CIMARRON - DRAPER LAKE 345KV CKT 1'	717	0.054	104.73	'DRAPER LAKE (DRAPER4) 345/138/13.8KV TRANSFORMER CKT 1'
12WP	00NR	2	'FROM->TO'	G11_050	'CIMARRON - DRAPER LAKE 345KV CKT 1'	717	0.054	103.94	'7SAREPT 345.00 - LONGWOOD 345KV CKT 1'
13WP	00NR	2	'FROM->TO'	G11_050	'CIMARRON - DRAPER LAKE 345KV CKT 1'	717	0.054	108.46	'7SAREPT 345.00 - LONGWOOD 345KV CKT 1'
17WP	00NR	2	'FROM->TO'	G11_050	'CIMARRON - DRAPER LAKE 345KV CKT 1'	717	0.054	100.00	'JOHNSON COUNTY - SUNNYSIDE 345KV CKT 1'
12WP	00NR	2	'FROM->TO'	G11_050	'CIMARRON - DRAPER LAKE 345KV CKT 1'	717	0.054	104.19	'HUGO - VALLIANT 345KV CKT 1'
13WP	00NR	2	'FROM->TO'	G11_050	'CIMARRON - DRAPER LAKE 345KV CKT 1'	717	0.054	108.43	'HUGO - VALLIANT 345KV CKT 1'
13WP	00NR	2	'FROM->TO'	G11_050	'CIMARRON - DRAPER LAKE 345KV CKT 1'	717	0.054	109.01	'CIMARRON - HAYMAKER 138KV CKT 1'
13WP	00NR	2	'FROM->TO'	G11_050	'CIMARRON - DRAPER LAKE 345KV CKT 1'	717	0.054	108.89	'DIVISION AVE - HAYMAKER 138KV CKT 1'
12WP	00NR	2	'FROM->TO'	G11_050	'CIMARRON - DRAPER LAKE 345KV CKT 1'	717	0.054	104.80	'CIMARRON - HAYMAKER 138KV CKT 1'
12WP	00NR	2	'FROM->TO'	G11_050	'CIMARRON - DRAPER LAKE 345KV CKT 1'	717	0.054	104.67	'DIVISION AVE - HAYMAKER 138KV CKT 1'
13WP	00NR	2	'FROM->TO'	G11_050	'CIMARRON - DRAPER LAKE 345KV CKT 1'	717	0.054	111.04	'CANEYRV7 345.00 - NEOSHO 345KV CKT 1'
13WP	00NR	2	'FROM->TO'	G11_050	'CIMARRON - DRAPER LAKE 345KV CKT 1'	717	0.054	110.89	'CANEYRV7 345.00 - LATHAMS7 345.00 345KV CKT 1'
13WP	00NR	2	'FROM->TO'	G11_050	'CIMARRON - DRAPER LAKE 345KV CKT 1'	717	0.054	110.35	'LATHAMS7 345.00 - ROSE HILL 345KV CKT 1'
17WP	00NR	2	'FROM->TO'	G11_050	'CIMARRON - DRAPER LAKE 345KV CKT 1'	717	0.054	100.34	'REDBUD - RIVERSIDE STATION 345KV CKT 1'
12WP	00NR	2	'FROM->TO'	G11_050	'CIMARRON - DRAPER LAKE 345KV CKT 1'	717	0.054	112.19	'MATTHEWSON 345.00 - NORTHWEST 345KV CKT 1'
13WP	00NR	2	'FROM->TO'	G11_050	'CIMARRON - DRAPER LAKE 345KV CKT 1'	717	0.054	116.37	'MATTHEWSON 345.00 - NORTHWEST 345KV CKT 1'
12WP	00NR	2	'FROM->TO'	G11_050	'CIMARRON - DRAPER LAKE 345KV CKT 1'	717	0.054	106.80	'CANEYRV7 345.00 - NEOSHO 345KV CKT 1'
12WP	00NR	2	'FROM->TO'	G11_050	'CIMARRON - DRAPER LAKE 345KV CKT 1'	717	0.054	106.62	'CANEYRV7 345.00 - LATHAMS7 345.00 345KV CKT 1'
12WP	00NR	2	'FROM->TO'	G11_050	'CIMARRON - DRAPER LAKE 345KV CKT 1'	717	0.054	106.11	'LATHAMS7 345.00 - ROSE HILL 345KV CKT 1'
12WP	00NR	2	'FROM->TO'	G11_050	'CIMARRON - DRAPER LAKE 345KV CKT 1'	717	0.053	102.14	'MAUD - SEMINOLE 138KV CKT 1'
13WP	00NR	2	'FROM->TO'	G11_050	'CIMARRON - DRAPER LAKE 345KV CKT 1'	717	0.053	106.59	'MAUD - SEMINOLE 138KV CKT 1'
13WP	00NR	2	'FROM->TO'	G11_050	'CIMARRON - DRAPER LAKE 345KV CKT 1'	717	0.053	108.27	'COMANCHE - LOCO 138KV CKT 1'
13WP	00NR	2	'FROM->TO'	G11_050	'CIMARRON - DRAPER LAKE 345KV CKT 1'	717	0.053	106.41	'G08-13T 345.00 - SUMNERCO 345.00 345KV CKT 1'
13WP	00NR	2	'FROM->TO'	G11_050	'CIMARRON - DRAPER LAKE 345KV CKT 1'	717	0.053	106.24	'G08-13T 345.00 - WOODRING 345KV CKT 1'
12WP	00NR	2	'FROM->TO'	G11_050	'CIMARRON - DRAPER LAKE 345KV CKT 1'	717	0.053	104.00	'COMANCHE - LOCO 138KV CKT 1'
12WP	00NR	2	'FROM->TO'	G11_050	'CIMARRON - DRAPER LAKE 345KV CKT 1'	717	0.053	102.08	'SEMINOLE (SEMINOL1) 345/138/14.4KV TRANSFORMER CKT 1'
13WP	00NR	2	'FROM->TO'	G11_050	'CIMARRON - DRAPER LAKE 345KV CKT 1'	717	0.053	106.50	'SEMINOLE (SEMINOL1) 345/138/14.4KV TRANSFORMER CKT 1'
12WP	00NR	2	'FROM->TO'	G11_050	'CIMARRON - DRAPER LAKE 345KV CKT 1'	717	0.053	102.09	'SEMINOLE (SEMINOL2) 345/138/14.4KV TRANSFORMER CKT 1'
13WP	00NR	2	'FROM->TO'	G11_050	'CIMARRON - DRAPER LAKE 345KV CKT 1'	717	0.053	106.51	'SEMINOLE (SEMINOL2) 345/138/14.4KV TRANSFORMER CKT 1'
12WP	00NR	2	'FROM->TO'	G11_050	'CIMARRON - DRAPER LAKE 345KV CKT 1'	717	0.053	102.30	'G08-13T 345.00 - SUMNERCO 345.00 345KV CKT 1'
12WP	00NR	2	'FROM->TO'	G11_050	'CIMARRON - DRAPER LAKE 345KV CKT 1'	717	0.053	102.15	'G08-13T 345.00 - WOODRING 345KV CKT 1'
13WP	00NR	2	'FROM->TO'	G11_050	'CIMARRON - DRAPER LAKE 345KV CKT 1'	717	0.053	107.98	'ANADARKO - BLANCHARD 69KV CKT 1'
12WP	00NR	2	'FROM->TO'	G11_050	'CIMARRON - DRAPER LAKE 345KV CKT 1'	717	0.053	103.75	'ANADARKO - BLANCHARD 69KV CKT 1'
13WP	00NR	2	'FROM->TO'	G11_050	'CIMARRON - DRAPER LAKE 345KV CKT 1'	717	0.053	108.48	'7SAREPT 345.00 - ELDORADO EHV 345KV CKT 1'
13WP	00NR	2	'FROM->TO'	G11_050	'CIMARRON - DRAPER LAKE 345KV CKT 1'	717	0.053	108.48	'A222'
13WP	00NR	2	'FROM->TO'	G11_050	'CIMARRON - DRAPER LAKE 345KV CKT 1'	717	0.053	108.48	'ELDORADO EHV 500/345KV TRANSFORMER CKT 1'
12WP	00NR	2	'FROM->TO'	G11_050	'CIMARRON - DRAPER LAKE 345KV CKT 1'	717	0.053	104.04	'7SAREPT 345.00 - ELDORADO EHV 345KV CKT 1'
12WP	00NR	2	'FROM->TO'	G11_050	'CIMARRON - DRAPER LAKE 345KV CKT 1'	717	0.053	104.04	'A222'
12WP	00NR	2	'FROM->TO'	G11_050	'CIMARRON - DRAPER LAKE 345KV CKT 1'	717	0.053	104.04	'ELDORADO EHV 500/345KV TRANSFORMER CKT 1'
13WP	00NR	2	'FROM->TO'	G11_050	'CIMARRON - DRAPER LAKE 345KV CKT 1'	717	0.053	106.39	'OGE3TERM22'

SEASON	GROUP	SCENARIO	DIRECTION	SOURCE	MONITORED ELEMENT	RATE B (MVA)	TDF	(%MVA) LOADING	CONTINGENCY
13WP	00NR	2	'FROM->TO'	G11_050	'CIMARRON - DRAPER LAKE 345KV CKT 1'	717	0.053	106.39	'DRAPER LAKE - SOONER TAP 138KV CKT 1'
12WP	00NR	2	'FROM->TO'	G11_050	'CIMARRON - DRAPER LAKE 345KV CKT 1'	717	0.053	101.98	'DRAPER LAKE - SOONER TAP 138KV CKT 1'
13WP	00NR	2	'FROM->TO'	G11_050	'CIMARRON - DRAPER LAKE 345KV CKT 1'	717	0.053	106.35	'OAKCREEK - WILD MARY 138KV CKT 1'
13WP	00NR	2	'FROM->TO'	G11_050	'CIMARRON - DRAPER LAKE 345KV CKT 1'	717	0.053	106.09	'AIRDEPT4 138.00 - WILD MARY 138KV CKT 1'
13WP	00NR	2	'FROM->TO'	G11_050	'CIMARRON - DRAPER LAKE 345KV CKT 1'	717	0.053	106.09	'AIRDEPT4 138.00 - GM 138KV CKT 1'
13WP	00NR	2	'FROM->TO'	G11_050	'CIMARRON - DRAPER LAKE 345KV CKT 1'	717	0.053	105.81	'DRAPER LAKE - GM 138KV CKT 1'
12WP	00NR	2	'FROM->TO'	G11_050	'CIMARRON - DRAPER LAKE 345KV CKT 1'	717	0.053	101.72	'OAKCREEK - WILD MARY 138KV CKT 1'
12WP	00NR	2	'FROM->TO'	G11_050	'CIMARRON - DRAPER LAKE 345KV CKT 1'	717	0.053	101.44	'AIRDEPT4 138.00 - WILD MARY 138KV CKT 1'
12WP	00NR	2	'FROM->TO'	G11_050	'CIMARRON - DRAPER LAKE 345KV CKT 1'	717	0.053	101.43	'AIRDEPT4 138.00 - GM 138KV CKT 1'
12WP	00NR	2	'FROM->TO'	G11_050	'CIMARRON - DRAPER LAKE 345KV CKT 1'	717	0.053	101.18	'DRAPER LAKE - GM 138KV CKT 1'
13WP	00NR	2	'FROM->TO'	G11_050	'CIMARRON - DRAPER LAKE 345KV CKT 1'	717	0.053	112.16	'DBL-WICH-THI'
12WP	00NR	2	'FROM->TO'	G11_050	'CIMARRON - DRAPER LAKE 345KV CKT 1'	717	0.053	102.21	'DELAWARE - NORTHEAST STATION 345KV CKT 1'
13WP	00NR	2	'FROM->TO'	G11_050	'CIMARRON - DRAPER LAKE 345KV CKT 1'	717	0.052	106.93	'OSAGE - WEBB CITY TAP 138KV CKT 1'
13WP	00NR	2	'FROM->TO'	G11_050	'CIMARRON - DRAPER LAKE 345KV CKT 1'	717	0.052	106.75	'FAIRFAX TAP - WEBB CITY TAP 138KV CKT 1'
13WP	00NR	2	'FROM->TO'	G11_050	'CIMARRON - DRAPER LAKE 345KV CKT 1'	717	0.052	119.98	'ARCADIA - HORSESHOE LAKE 345KV CKT 1'
13WP	00NR	2	'FROM->TO'	G11_050	'CIMARRON - DRAPER LAKE 345KV CKT 1'	717	0.052	119.97	'HORSESHOE LAKE - SEMINOLE 345KV CKT 1'
12WP	00NR	2	'FROM->TO'	G11_050	'CIMARRON - DRAPER LAKE 345KV CKT 1'	717	0.052	102.65	'OSAGE - WEBB CITY TAP 138KV CKT 1'
12WP	00NR	2	'FROM->TO'	G11_050	'CIMARRON - DRAPER LAKE 345KV CKT 1'	717	0.052	102.47	'FAIRFAX TAP - WEBB CITY TAP 138KV CKT 1'
13WP	00NR	2	'FROM->TO'	G11_050	'CIMARRON - DRAPER LAKE 345KV CKT 1'	717	0.052	108.72	'THISTLE 7 345.00 - WOODWARD DISTRICT EHV 345KV CKT 1'
13WP	00NR	2	'FROM->TO'	G11_050	'CIMARRON - DRAPER LAKE 345KV CKT 1'	717	0.052	108.72	'THISTLE 7 345.00 - WOODWARD DISTRICT EHV 345KV CKT 2'
13WP	00NR	2	'FROM->TO'	G11_050	'CIMARRON - DRAPER LAKE 345KV CKT 1'	717	0.052	106.70	'DELAWARE - NORTHEAST STATION 345KV CKT 1'
12WP	00NR	2	'FROM->TO'	G11_050	'CIMARRON - DRAPER LAKE 345KV CKT 1'	717	0.052	102.71	'MAUD - SEMINOLE 138KV CKT 2'
12WP	00NR	2	'FROM->TO'	G11_050	'CIMARRON - DRAPER LAKE 345KV CKT 1'	717	0.052	104.51	'THISTLE 7 345.00 - WOODWARD DISTRICT EHV 345KV CKT 1'
12WP	00NR	2	'FROM->TO'	G11_050	'CIMARRON - DRAPER LAKE 345KV CKT 1'	717	0.052	104.51	'THISTLE 7 345.00 - WOODWARD DISTRICT EHV 345KV CKT 2'
13WP	00NR	2	'FROM->TO'	G11_050	'CIMARRON - DRAPER LAKE 345KV CKT 1'	717	0.052	111.18	'ANDERSONCO 345.00 - LACYGNE 345KV CKT 1'
13WP	00NR	2	'FROM->TO'	G11_050	'CIMARRON - DRAPER LAKE 345KV CKT 1'	717	0.052	111.06	'ANDERSONCO 345.00 - WOLF CREEK 345KV CKT 1'
13WP	00NR	2	'FROM->TO'	G11_050	'CIMARRON - DRAPER LAKE 345KV CKT 1'	717	0.052	106.95	'CROCKETT - GRIMES 345KV CKT 1'
13WP	00NR	2	'FROM->TO'	G11_050	'CIMARRON - DRAPER LAKE 345KV CKT 1'	717	0.052	108.50	'FAIRFAX TAP - SHIDLER 138KV CKT 1'
13WP	00NR	2	'FROM->TO'	G11_050	'CIMARRON - DRAPER LAKE 345KV CKT 1'	717	0.052	108.46	'SHIDLER - WEST PAWHUSKA 138KV CKT 1'
13WP	00NR	2	'FROM->TO'	G11_050	'CIMARRON - DRAPER LAKE 345KV CKT 1'	717	0.052	108.46	'PAWHUSKA TAP - WEST PAWHUSKA 138KV CKT 1'
13WP	00NR	2	'FROM->TO'	G11_050	'CIMARRON - DRAPER LAKE 345KV CKT 1'	717	0.052	108.41	'DOMES - PAWHUSKA TAP 138KV CKT 1'
13WP	00NR	2	'FROM->TO'	G11_050	'CIMARRON - DRAPER LAKE 345KV CKT 1'	717	0.052	108.39	'DOMES - MOUND ROAD 138KV CKT 1'
13WP	00NR	2	'FROM->TO'	G11_050	'CIMARRON - DRAPER LAKE 345KV CKT 1'	717	0.052	107.98	'PENNSYLVANIA - SANTA FE 138KV CKT 1'
12WP	00NR	2	'FROM->TO'	G11_050	'CIMARRON - DRAPER LAKE 345KV CKT 1'	717	0.052	106.90	'ANDERSONCO 345.00 - LACYGNE 345KV CKT 1'
12WP	00NR	2	'FROM->TO'	G11_050	'CIMARRON - DRAPER LAKE 345KV CKT 1'	717	0.052	106.77	'ANDERSONCO 345.00 - WOLF CREEK 345KV CKT 1'
13WP	00NR	2	'FROM->TO'	G11_050	'CIMARRON - DRAPER LAKE 345KV CKT 1'	717	0.052	108.81	'MINGO - RED WILLOW 345KV CKT 1'
12WP	00NR	2	'FROM->TO'	G11_050	'CIMARRON - DRAPER LAKE 345KV CKT 1'	717	0.052	104.23	'FAIRFAX TAP - SHIDLER 138KV CKT 1'
12WP	00NR	2	'FROM->TO'	G11_050	'CIMARRON - DRAPER LAKE 345KV CKT 1'	717	0.052	104.20	'SHIDLER - WEST PAWHUSKA 138KV CKT 1'
12WP	00NR	2	'FROM->TO'	G11_050	'CIMARRON - DRAPER LAKE 345KV CKT 1'	717	0.052	104.19	'PAWHUSKA TAP - WEST PAWHUSKA 138KV CKT 1'
12WP	00NR	2	'FROM->TO'	G11_050	'CIMARRON - DRAPER LAKE 345KV CKT 1'	717	0.052	104.15	'DOMES - PAWHUSKA TAP 138KV CKT 1'
12WP	00NR	2	'FROM->TO'	G11_050	'CIMARRON - DRAPER LAKE 345KV CKT 1'	717	0.052	104.12	'DOMES - MOUND ROAD 138KV CKT 1'
13WP	00NR	2	'FROM->TO'	G11_050	'CIMARRON - DRAPER LAKE 345KV CKT 1'	717	0.052	108.33	'HOLLYWOOD - PLEASANT VALLEY 138KV CKT 1'
13WP	00NR	2	'FROM->TO'	G11_050	'CIMARRON - DRAPER LAKE 345KV CKT 1'	717	0.052	108.62	'CLASSEN - ROBINSON 138KV CKT 1'
13WP	00NR	2	'FROM->TO'	G11_050	'CIMARRON - DRAPER LAKE 345KV CKT 1'	717	0.052	108.33	'LIGHTNING CREEK - ROBINSON 138KV CKT 1'
13WP	00NR	2	'FROM->TO'	G11_050	'CIMARRON - DRAPER LAKE 345KV CKT 1'	717	0.052	108.17	'LIGHTNING CREEK - TROSPER 138KV CKT 1'
13WP	00NR	2	'FROM->TO'	G11_050	'CIMARRON - DRAPER LAKE 345KV CKT 1'	717	0.052	108.03	'BEAVER CO 345.00 - GRAY CO 345.00 345KV CKT 1'
12WP	00NR	2	'FROM->TO'	G11_050	'CIMARRON - DRAPER LAKE 345KV CKT 1'	717	0.052	104.64	'MINGO - RED WILLOW 345KV CKT 1'
13WP	00NR	2	'FROM->TO'	G11_050	'CIMARRON - DRAPER LAKE 345KV CKT 1'	717	0.052	109.23	'OGE3TERM47'
12WP	00NR	2	'FROM->TO'	G11_050	'CIMARRON - DRAPER LAKE 345KV CKT 1'	717	0.052	104.39	'CLASSEN - ROBINSON 138KV CKT 1'
12WP	00NR	2	'FROM->TO'	G11_050	'CIMARRON - DRAPER LAKE 345KV CKT 1'	717	0.052	104.10	'LIGHTNING CREEK - ROBINSON 138KV CKT 1'
12WP	00NR	2	'FROM->TO'	G11_050	'CIMARRON - DRAPER LAKE 345KV CKT 1'	717	0.052	103.95	'LIGHTNING CREEK - TROSPER 138KV CKT 1'
12WP	00NR	2	'FROM->TO'	G11_050	'CIMARRON - DRAPER LAKE 345KV CKT 1'	717	0.052	103.81	'BEAVER CO 345.00 - GRAY CO 345.00 345KV CKT 1'
13WP	00NR	2	'FROM->TO'	G11_050	'CIMARRON - DRAPER LAKE 345KV CKT 1'	717	0.052	109.22	'MCCLAIN - PLEASANT VALLEY 138KV CKT 1'
13WP	00NR	2	'FROM->TO'	G11_050	'CIMARRON - DRAPER LAKE 345KV CKT 1'	717	0.052	108.16	'HAMMETT TAP - HORSESHOE LAKE 138KV CKT 1'
13WP	00NR	2	'FROM->TO'	G11_050	'CIMARRON - DRAPER LAKE 345KV CKT 1'	717	0.052	108.73	'MINGO - SETAB 345KV CKT 1'
13WP	00NR	2	'FROM->TO'	G11_050	'CIMARRON - DRAPER LAKE 345KV CKT 1'	717	0.052	108.10	'DBL-FINY-HOL'
13WP	00NR	2	'FROM->TO'	G11_050	'CIMARRON - DRAPER LAKE 345KV CKT 1'	717	0.052	108.06	'FINNEY SWITCHING STATION - STEVENSCO 345.00 345KV CKT 1'
13WP	00NR	2	'FROM->TO'	G11_050	'CIMARRON - DRAPER LAKE 345KV CKT 1'	717	0.052	108.57	'EMPORIA ENERGY CENTER - WICHITA 345KV CKT 1'
13WP	00NR	2	'FROM->TO'	G11_050	'CIMARRON - DRAPER LAKE 345KV CKT 1'	717	0.052	108.29	'GRAY CO 345.00 - SPEARVILLE 345KV CKT 1'
13WP	00NR	2	'FROM->TO'	G11_050	'CIMARRON - DRAPER LAKE 345KV CKT 1'	717	0.052	109.44	'AXTELL - POST ROCK 345KV CKT 1'
13WP	00NR	2	'FROM->TO'	G11_050	'CIMARRON - DRAPER LAKE 345KV CKT 1'	717	0.052	108.56	'KETCH TAP - NORTHWEST 138KV CKT 1'
12WP	00NR	2	'FROM->TO'	G11_050	'CIMARRON - DRAPER LAKE 345KV CKT 1'	717	0.052	104.34	'MCCLAIN - PLEASANT VALLEY 138KV CKT 1'
12WP	00NR	2	'FROM->TO'	G11_050	'CIMARRON - DRAPER LAKE 345KV CKT 1'	717	0.052	104.57	'MINGO - SETAB 345KV CKT 1'
13WP	00NR	2	'FROM->TO'	G11_050	'CIMARRON - DRAPER LAKE 345KV CKT 1'	717	0.052	101.51	'MATTHEWSON 345.00 - TATONGA7 345.00 345KV CKT 1'
13WP	00NR	2	'FROM->TO'	G11_050	'CIMARRON - DRAPER LAKE 345KV CKT 1'	717	0.052	101.51	'MATTHEWSON 345.00 - TATONGA7 345.00 345KV CKT 2'
13WP	00NR	2	'FROM->TO'	G11_050	'CIMARRON - DRAPER LAKE 345KV CKT 1'	717	0.052	106.83	'LEBROCK - TENASKA RUSK COUNTY 345KV CKT 1'
13WP	00NR	2	'FROM->TO'	G11_050	'CIMARRON - DRAPER LAKE 345KV CKT 1'	717	0.052	106.83	'CROCKETT - TENASKA RUSK COUNTY 345KV CKT 1'
12WP	00NR	2	'FROM->TO'	G11_050	'CIMARRON - DRAPER LAKE 345KV CKT 1'	717	0.052	103.88	'HAMMETT TAP - HORSESHOE LAKE 138KV CKT 1'
12WP	00NR	2	'FROM->TO'	G11_050	'CIMARRON - DRAPER LAKE 345KV CKT 1'	717	0.052	103.83	'FINNEY SWITCHING STATION - STEVENSCO 345.00 345KV CKT 1'
13WP	00NR	2	'FROM->TO'	G11_050	'CIMARRON - DRAPER LAKE 345KV CKT 1'	717	0.052	108.48	'OVERTON-TRF'
12WP	00NR	2	'FROM->TO'	G11_050	'CIMARRON - DRAPER LAKE 345KV CKT 1'	717	0.052	104.35	'EMPORIA ENERGY CENTER - WICHITA 345KV CKT 1'
12WP	00NR	2	'FROM->TO'	G11_050	'CIMARRON - DRAPER LAKE 345KV CKT 1'	717	0.052	104.09	'GRAY CO 345.00 - SPEARVILLE 345KV CKT 1'
12WP	00NR	2	'FROM->TO'	G11_050	'CIMARRON - DRAPER LAKE 345KV CKT 1'	717	0.052	102.66	'LEBROCK - TENASKA RUSK COUNTY 345KV CKT 1'
12WP	00NR	2	'FROM->TO'	G11_050	'CIMARRON - DRAPER LAKE 345KV CKT 1'	717	0.052	102.65	'CROCKETT - TENASKA RUSK COUNTY 345KV CKT 1'
12WP	00NR	2	'FROM->TO'	G11_050	'CIMARRON - DRAPER LAKE 345KV CKT 1'	717	0.052	114.69	'ARCADIA - HORSESHOE LAKE 345KV CKT 1'
12WP	00NR	2	'FROM->TO'	G11_050	'CIMARRON - DRAPER LAKE 345KV CKT 1'	717	0.052	114.68	'HORSESHOE LAKE - SEMINOLE 345KV CKT 1'
13WP	00NR	2	'FROM->TO'	G11_050	'CIMARRON - DRAPER LAKE 345KV CKT 1'	717	0.052	109.00	'LACYGNE - NEOSHO 345KV CKT 1'
13WP	00NR	2	'FROM->TO'	G11_050	'CIMARRON - DRAPER LAKE 345KV CKT 1'	717	0.052	108.65	'DIVISION AVE - LAKESIDE 138KV CKT 1'

SEASON	GROUP	SCENARIO	DIRECTION	SOURCE	MONITORED ELEMENT	RATE B (MVA)	TDF	(%MVA) LOADING	CONTINGENCY
13WP	00NR	2	'FROM->TO'	G11_050	'CIMARRON - DRAPER LAKE 345KV CKT 1'	717	0.052	108.57	'7OVERTON 345.00 - SIBLEY 345KV CKT 1'
13WP	00NR	2	'FROM->TO'	G11_050	'CIMARRON - DRAPER LAKE 345KV CKT 1'	717	0.052	108.53	'HEFNER - LAKESIDE 138KV CKT 1'
12WP	00NR	2	'FROM->TO'	G11_050	'CIMARRON - DRAPER LAKE 345KV CKT 1'	717	0.052	105.23	'AXTELL - POST ROCK 345KV CKT 1'
12WP	00NR	2	'FROM->TO'	G11_050	'CIMARRON - DRAPER LAKE 345KV CKT 1'	717	0.052	104.43	'KETCH TAP - NORTHWEST 138KV CKT 1'
13WP	00NR	2	'FROM->TO'	G11_050	'CIMARRON - DRAPER LAKE 345KV CKT 1'	717	0.052	108.98	'BLACKBERRY - NEOSHO 345KV CKT 1'
13WP	00NR	2	'FROM->TO'	G11_050	'CIMARRON - DRAPER LAKE 345KV CKT 1'	717	0.052	108.57	'OGE3TERM11'
12WP	00NR	2	'FROM->TO'	G11_050	'CIMARRON - DRAPER LAKE 345KV CKT 1'	717	0.052	104.30	'OVERTON-TRF'
13WP	00NR	2	'FROM->TO'	G11_050	'CIMARRON - DRAPER LAKE 345KV CKT 1'	717	0.052	108.86	'QUAIL CREEK - SKYLINE 138KV CKT 1'
12WP	00NR	2	'FROM->TO'	G11_050	'CIMARRON - DRAPER LAKE 345KV CKT 1'	717	0.052	104.44	'DIVISION AVE - LAKESIDE 138KV CKT 1'
12WP	00NR	2	'FROM->TO'	G11_050	'CIMARRON - DRAPER LAKE 345KV CKT 1'	717	0.052	104.38	'7OVERTON 345.00 - SIBLEY 345KV CKT 1'
12WP	00NR	2	'FROM->TO'	G11_050	'CIMARRON - DRAPER LAKE 345KV CKT 1'	717	0.052	104.31	'HEFNER - LAKESIDE 138KV CKT 1'
13WP	00NR	2	'FROM->TO'	G11_050	'CIMARRON - DRAPER LAKE 345KV CKT 1'	717	0.052	103.97	'G11_051T 345.00 - WOODWARD DISTRICT EHV 345KV CKT 1'
13WP	00NR	2	'FROM->TO'	G11_050	'CIMARRON - DRAPER LAKE 345KV CKT 1'	717	0.052	103.71	'TATONGA7 345.00 - WOODWARD DISTRICT EHV 345KV CKT 2'
13WP	00NR	2	'FROM->TO'	G11_050	'CIMARRON - DRAPER LAKE 345KV CKT 1'	717	0.052	103.38	'G11_051T 345.00 - TATONGA7 345.00 345KV CKT 1'
17WP	00NR	2	'FROM->TO'	G11_050	'CIMARRON - DRAPER LAKE 345KV CKT 1'	717	0.052	101.94	'CIMARRON - CZECH HALL 138KV CKT 1'
17WP	00NR	2	'FROM->TO'	G11_050	'CIMARRON - DRAPER LAKE 345KV CKT 1'	717	0.052	101.50	'CZECH HALL - XEROX 138KV CKT 1'
17WP	00NR	2	'FROM->TO'	G11_050	'CIMARRON - DRAPER LAKE 345KV CKT 1'	717	0.052	101.48	'MORGAN - XEROX 138KV CKT 1'
17WP	00NR	2	'FROM->TO'	G11_050	'CIMARRON - DRAPER LAKE 345KV CKT 1'	717	0.052	101.42	'MORGAN - MUSTANG 138KV CKT 1'
13WP	00NR	2	'FROM->TO'	G11_050	'CIMARRON - DRAPER LAKE 345KV CKT 1'	717	0.052	108.38	'HOLCOMB - SETAB 345KV CKT 1'
13WP	00NR	2	'FROM->TO'	G11_050	'CIMARRON - DRAPER LAKE 345KV CKT 1'	717	0.052	108.26	'DOLET HILLS - SOUTHWEST SHREVEPORT 345KV CKT 1'
13WP	00NR	2	'FROM->TO'	G11_050	'CIMARRON - DRAPER LAKE 345KV CKT 1'	717	0.052	106.61	'DOLET HILLS 345/230KV TRANSFORMER CKT 1'
12WP	00NR	2	'FROM->TO'	G11_050	'CIMARRON - DRAPER LAKE 345KV CKT 1'	717	0.052	104.73	'LACYGNE - NEOSHO 345KV CKT 1'
13WP	00NR	2	'FROM->TO'	G11_050	'CIMARRON - DRAPER LAKE 345KV CKT 1'	717	0.052	108.16	'ROSE HILL - SUMNERCO 345.00 345KV CKT 1'
12WP	00NR	2	'FROM->TO'	G11_050	'CIMARRON - DRAPER LAKE 345KV CKT 1'	717	0.052	104.17	'HOLCOMB - SETAB 345KV CKT 1'
13WP	00NR	2	'FROM->TO'	G11_050	'CIMARRON - DRAPER LAKE 345KV CKT 1'	717	0.052	108.15	'WEBRE - WELLS 500KV CKT 1'
12WP	00NR	2	'FROM->TO'	G11_050	'CIMARRON - DRAPER LAKE 345KV CKT 1'	717	0.052	104.70	'QUAIL CREEK - SKYLINE 138KV CKT 1'
12WP	00NR	2	'FROM->TO'	G11_050	'CIMARRON - DRAPER LAKE 345KV CKT 1'	717	0.052	104.10	'DOLET HILLS - SOUTHWEST SHREVEPORT 345KV CKT 1'
12WP	00NR	2	'FROM->TO'	G11_050	'CIMARRON - DRAPER LAKE 345KV CKT 1'	717	0.052	102.41	'DOLET HILLS 345/230KV TRANSFORMER CKT 1'
13WP	00NR	2	'FROM->TO'	G11_050	'CIMARRON - DRAPER LAKE 345KV CKT 1'	717	0.052	109.30	'G11-17T 345.00 - POST ROCK 345KV CKT 1'
13WP	00NR	2	'FROM->TO'	G11_050	'CIMARRON - DRAPER LAKE 345KV CKT 1'	717	0.052	108.46	'SWISSVALE - WEST GARDNER 345KV CKT 1'
13WP	00NR	2	'FROM->TO'	G11_050	'CIMARRON - DRAPER LAKE 345KV CKT 1'	717	0.052	108.23	'ELDORADO EHV - SHERIDAN EHV 500KV CKT 1'
12WP	00NR	2	'FROM->TO'	G11_050	'CIMARRON - DRAPER LAKE 345KV CKT 1'	717	0.052	104.10	'WEBRE - WELLS 500KV CKT 1'
12WP	00NR	2	'FROM->TO'	G11_050	'CIMARRON - DRAPER LAKE 345KV CKT 1'	717	0.052	103.92	'ROSE HILL - SUMNERCO 345.00 345KV CKT 1'
13WP	00NR	2	'FROM->TO'	G11_050	'CIMARRON - DRAPER LAKE 345KV CKT 1'	717	0.052	108.81	'THISTLE 7 345.00 - WICHITA 345KV CKT 1'
13WP	00NR	2	'FROM->TO'	G11_050	'CIMARRON - DRAPER LAKE 345KV CKT 1'	717	0.052	108.81	'THISTLE 7 345.00 - WICHITA 345KV CKT 2'
12WP	00NR	2	'FROM->TO'	G11_050	'CIMARRON - DRAPER LAKE 345KV CKT 1'	717	0.052	105.09	'G11-17T 345.00 - POST ROCK 345KV CKT 1'
12WP	00NR	2	'FROM->TO'	G11_050	'CIMARRON - DRAPER LAKE 345KV CKT 1'	717	0.052	104.01	'ELDORADO EHV - SHERIDAN EHV 500KV CKT 1'
12WP	00NR	2	'FROM->TO'	G11_050	'CIMARRON - DRAPER LAKE 345KV CKT 1'	717	0.052	104.68	'THISTLE 7 345.00 - WICHITA 345KV CKT 1'
12WP	00NR	2	'FROM->TO'	G11_050	'CIMARRON - DRAPER LAKE 345KV CKT 1'	717	0.052	104.68	'THISTLE 7 345.00 - WICHITA 345KV CKT 2'
12WP	00NR	2	'FROM->TO'	G11_050	'CIMARRON - DRAPER LAKE 345KV CKT 1'	717	0.052	104.21	'SWISSVALE - WEST GARDNER 345KV CKT 1'
12WP	00NR	2	'FROM->TO'	G11_050	'CIMARRON - DRAPER LAKE 345KV CKT 1'	717	0.052	104.47	'7JASPER 345.00 - MORGAN 345KV CKT 1'
13WP	00NR	2	'FROM->TO'	G11_050	'CIMARRON - DRAPER LAKE 345KV CKT 1'	717	0.052	109.17	'WRTOD400'
13WP	00NR	2	'FROM->TO'	G11_050	'CIMARRON - DRAPER LAKE 345KV CKT 1'	717	0.052	108.21	'EMPORIA ENERGY CENTER - SWISSVALE 345KV CKT 1'
13WP	00NR	2	'FROM->TO'	G11_050	'CIMARRON - DRAPER LAKE 345KV CKT 1'	717	0.052	107.94	'COUNCIL - MUSTANG 138KV CKT 1'
13WP	00NR	2	'FROM->TO'	G11_050	'CIMARRON - DRAPER LAKE 345KV CKT 1'	717	0.052	108.69	'HOYT - STRANGER CREEK 345KV CKT 1'
13WP	00NR	2	'FROM->TO'	G11_050	'CIMARRON - DRAPER LAKE 345KV CKT 1'	717	0.052	109.37	'MORISNT4 138.00 - STILLWATER 138KV CKT 1'
13WP	00NR	2	'FROM->TO'	G11_050	'CIMARRON - DRAPER LAKE 345KV CKT 1'	717	0.052	109.08	'HOYT - JEFFREY ENERGY CENTER 345KV CKT 1'
13WP	00NR	2	'FROM->TO'	G11_050	'CIMARRON - DRAPER LAKE 345KV CKT 1'	717	0.052	108.23	'BENTON - WICHITA 345KV CKT 1'
13WP	00NR	2	'FROM->TO'	G11_050	'CIMARRON - DRAPER LAKE 345KV CKT 1'	717	0.052	107.04	'HOLLYWOOD - MIDWEST TAP 138KV CKT 1'
12WP	00NR	2	'FROM->TO'	G11_050	'CIMARRON - DRAPER LAKE 345KV CKT 1'	717	0.052	104.72	'7JASPER 345.00 - NEOSHO 345KV CKT 1'
12WP	00NR	2	'FROM->TO'	G11_050	'CIMARRON - DRAPER LAKE 345KV CKT 1'	717	0.052	103.71	'SAPULPA ROAD - WEKIWA 345KV CKT 1'
13WP	00NR	2	'FROM->TO'	G11_050	'CIMARRON - DRAPER LAKE 345KV CKT 1'	717	0.052	108.06	'RENO COUNTY - SUMMIT 345KV CKT 1'
12WP	00NR	2	'FROM->TO'	G11_050	'CIMARRON - DRAPER LAKE 345KV CKT 1'	717	0.052	102.79	'PAOLI - SEMINOLE 138KV CKT 1'
13WP	00NR	2	'FROM->TO'	G11_050	'CIMARRON - DRAPER LAKE 345KV CKT 1'	717	0.052	108.26	'CLEVELAND (CLVAUTO1) 345/138/13.8KV TRANSFORMER CKT 1'
13WP	00NR	2	'FROM->TO'	G11_050	'CIMARRON - DRAPER LAKE 345KV CKT 1'	717	0.052	106.98	'ROSE HILL - WOLF CREEK 345KV CKT 1'
12WP	00NR	2	'FROM->TO'	G11_050	'CIMARRON - DRAPER LAKE 345KV CKT 1'	717	0.052	104.93	'WRTOD400'
12WP	00NR	2	'FROM->TO'	G11_050	'CIMARRON - DRAPER LAKE 345KV CKT 1'	717	0.052	103.95	'EMPORIA ENERGY CENTER - SWISSVALE 345KV CKT 1'
12WP	00NR	2	'FROM->TO'	G11_050	'CIMARRON - DRAPER LAKE 345KV CKT 1'	717	0.052	103.71	'JEFFREY ENERGY CENTER - SUMMIT 345KV CKT 1'
12WP	00NR	2	'FROM->TO'	G11_050	'CIMARRON - DRAPER LAKE 345KV CKT 1'	717	0.052	103.70	'COUNCIL - MUSTANG 138KV CKT 1'
13WP	00NR	2	'FROM->TO'	G11_050	'CIMARRON - DRAPER LAKE 345KV CKT 1'	717	0.052	108.10	'DAYTON - MUSTANG 138KV CKT 1'
13WP	00NR	2	'FROM->TO'	G11_050	'CIMARRON - DRAPER LAKE 345KV CKT 1'	717	0.052	108.10	'DAYTON - HOBBY LOBBY 138KV CKT 1'
13WP	00NR	2	'FROM->TO'	G11_050	'CIMARRON - DRAPER LAKE 345KV CKT 1'	717	0.052	108.05	'36 & MERIDIAN - HOBBY LOBBY 138KV CKT 1'
13WP	00NR	2	'FROM->TO'	G11_050	'CIMARRON - DRAPER LAKE 345KV CKT 1'	717	0.052	106.42	'PARK LANE - SEMINOLE 138KV CKT 1'
12WP	00NR	2	'FROM->TO'	G11_050	'CIMARRON - DRAPER LAKE 345KV CKT 1'	717	0.052	104.43	'HOYT - STRANGER CREEK 345KV CKT 1'
12WP	00NR	2	'FROM->TO'	G11_050	'CIMARRON - DRAPER LAKE 345KV CKT 1'	717	0.052	104.06	'BENTON - WICHITA 345KV CKT 1'
12WP	00NR	2	'FROM->TO'	G11_050	'CIMARRON - DRAPER LAKE 345KV CKT 1'	717	0.052	102.29	'HOLLYWOOD - MIDWEST TAP 138KV CKT 1'
13WP	00NR	2	'FROM->TO'	G11_050	'CIMARRON - DRAPER LAKE 345KV CKT 1'	717	0.052	106.78	'OGE3TERM33'
13WP	00NR	2	'FROM->TO'	G11_050	'CIMARRON - DRAPER LAKE 345KV CKT 1'	717	0.052	106.53	'KEO EHV - WEST MEMPHIS 500 500KV CKT 1'
12WP	00NR	2	'FROM->TO'	G11_050	'CIMARRON - DRAPER LAKE 345KV CKT 1'	717	0.052	104.84	'HOYT - JEFFREY ENERGY CENTER 345KV CKT 1'
13WP	00NR	2	'FROM->TO'	G11_050	'CIMARRON - DRAPER LAKE 345KV CKT 1'	717	0.052	108.97	'DBL-MULG-CIR'
13WP	00NR	2	'FROM->TO'	G11_050	'CIMARRON - DRAPER LAKE 345KV CKT 1'	717	0.052	108.94	'DBL-SPRVL-MU'
13WP	00NR	2	'FROM->TO'	G11_050	'CIMARRON - DRAPER LAKE 345KV CKT 1'	717	0.052	108.81	'OGE3TERM18'
13WP	00NR	2	'FROM->TO'	G11_050	'CIMARRON - DRAPER LAKE 345KV CKT 1'	717	0.052	107.95	'LAKEOVER - MCADAMS 500KV CKT 1'
12WP	00NR	2	'FROM->TO'	G11_050	'CIMARRON - DRAPER LAKE 345KV CKT 1'	717	0.052	105.19	'MORISNT4 138.00 - STILLWATER 138KV CKT 1'
12WP	00NR	2	'FROM->TO'	G11_050	'CIMARRON - DRAPER LAKE 345KV CKT 1'	717	0.052	103.82	'RENO COUNTY - SUMMIT 345KV CKT 1'
12WP	00NR	2	'FROM->TO'	G11_050	'CIMARRON - DRAPER LAKE 345KV CKT 1'	717	0.052	104.03	'CLEVELAND (CLVAUTO1) 345/138/13.8KV TRANSFORMER CKT 1'
12WP	00NR	2	'FROM->TO'	G11_050	'CIMARRON - DRAPER LAKE 345KV CKT 1'	717	0.052	103.90	'DAYTON - MUSTANG 138KV CKT 1'
12WP	00NR	2	'FROM->TO'	G11_050	'CIMARRON - DRAPER LAKE 345KV CKT 1'	717	0.052	103.89	'DAYTON - HOBBY LOBBY 138KV CKT 1'

SEASON	GROUP	SCENARIO	DIRECTION	SOURCE	MONITORED ELEMENT	RATE B (MVA)	TDF	(%MVA) LOADING	CONTINGENCY
12WP	00NR	2	'FROM->TO'	G11_050	'CIMARRON - DRAPER LAKE 345KV CKT 1'	717	0.052	103.84	'36 & MERIDIAN - HOBBY LOBBY 138KV CKT 1'
12WP	00NR	2	'FROM->TO'	G11_050	'CIMARRON - DRAPER LAKE 345KV CKT 1'	717	0.052	102.80	'ROSE HILL - WOLF CREEK 345KV CKT 1'
12WP	00NR	2	'FROM->TO'	G11_050	'CIMARRON - DRAPER LAKE 345KV CKT 1'	717	0.052	102.10	'PARK LANE - SEMINOLE 138KV CKT 1'
13WP	00NR	2	'FROM->TO'	G11_050	'CIMARRON - DRAPER LAKE 345KV CKT 1'	717	0.052	106.93	'ARBUCKLE - VANOSS 138KV CKT 1'
13WP	00NR	2	'FROM->TO'	G11_050	'CIMARRON - DRAPER LAKE 345KV CKT 1'	717	0.052	105.96	'BEAVER CO 345.00 - WOODWARD DISTRICT EHV 345KV CKT 1'
12WP	00NR	2	'FROM->TO'	G11_050	'CIMARRON - DRAPER LAKE 345KV CKT 1'	717	0.052	102.29	'KEO EHV - WEST MEMPHIS 500 500KV CKT 1'
13WP	00NR	2	'FROM->TO'	G11_050	'CIMARRON - DRAPER LAKE 345KV CKT 1'	717	0.052	108.27	'7JASPER 345.00 - MORGAN 345KV CKT 1'
13WP	00NR	2	'FROM->TO'	G11_050	'CIMARRON - DRAPER LAKE 345KV CKT 1'	717	0.052	108.24	'AXTELL - PAULINE 345KV CKT 1'
13WP	00NR	2	'FROM->TO'	G11_050	'CIMARRON - DRAPER LAKE 345KV CKT 1'	717	0.052	108.21	'AI43'
13WP	00NR	2	'FROM->TO'	G11_050	'CIMARRON - DRAPER LAKE 345KV CKT 1'	717	0.052	108.21	'7LUTESVIL 345.00 - 7ST FRANC 345.00 345KV CKT 1'
13WP	00NR	2	'FROM->TO'	G11_050	'CIMARRON - DRAPER LAKE 345KV CKT 1'	717	0.052	106.90	'8BHAM STEEL 500.00 - WEST MEMPHIS 500 500KV CKT 1'
13WP	00NR	2	'FROM->TO'	G11_050	'CIMARRON - DRAPER LAKE 345KV CKT 1'	717	0.052	106.89	'AMRN_OUTS5'
13WP	00NR	2	'FROM->TO'	G11_050	'CIMARRON - DRAPER LAKE 345KV CKT 1'	717	0.052	106.54	'DELL 500 - INDEPENDENCE 500KV CKT 1'
13WP	00NR	2	'FROM->TO'	G11_050	'CIMARRON - DRAPER LAKE 345KV CKT 1'	717	0.052	108.50	'GRAND ISLAND - SWEETWATER 345KV CKT 1'
13WP	00NR	2	'FROM->TO'	G11_050	'CIMARRON - DRAPER LAKE 345KV CKT 1'	717	0.052	108.09	'MOORE - PAULINE 345KV CKT 1'
13WP	00NR	2	'FROM->TO'	G11_050	'CIMARRON - DRAPER LAKE 345KV CKT 1'	717	0.052	108.71	'36 & MERIDIAN - PENNSYLVANIA 138KV CKT 1'
12WP	00NR	2	'FROM->TO'	G11_050	'CIMARRON - DRAPER LAKE 345KV CKT 1'	717	0.052	103.69	'AI13'
12WP	00NR	2	'FROM->TO'	G11_050	'CIMARRON - DRAPER LAKE 345KV CKT 1'	717	0.052	102.67	'ARBUCKLE - VANOSS 138KV CKT 1'
12WP	00NR	2	'FROM->TO'	G11_050	'CIMARRON - DRAPER LAKE 345KV CKT 1'	717	0.052	101.74	'BEAVER CO 345.00 - WOODWARD DISTRICT EHV 345KV CKT 1'
13WP	00NR	2	'FROM->TO'	G11_050	'CIMARRON - DRAPER LAKE 345KV CKT 1'	717	0.052	108.19	'HAMMETT TAP - HAMMETT2 138KV CKT 1'
13WP	00NR	2	'FROM->TO'	G11_050	'CIMARRON - DRAPER LAKE 345KV CKT 1'	717	0.052	108.07	'HAMMETT2 - MEEKER 138KV CKT 1'
13WP	00NR	2	'FROM->TO'	G11_050	'CIMARRON - DRAPER LAKE 345KV CKT 1'	717	0.052	106.96	'SEMINOLE - VANOSS 138KV CKT 1'
13WP	00NR	2	'FROM->TO'	G11_050	'CIMARRON - DRAPER LAKE 345KV CKT 1'	717	0.052	108.24	'7JASPER 345.00 - BLACKBERRY 345KV CKT 1'
13WP	00NR	2	'FROM->TO'	G11_050	'CIMARRON - DRAPER LAKE 345KV CKT 1'	717	0.052	107.98	'SHERIDAN EHV - WHITE BLUFF 500KV CKT 1'
12WP	00NR	2	'FROM->TO'	G11_050	'CIMARRON - DRAPER LAKE 345KV CKT 1'	717	0.052	104.02	'AXTELL - PAULINE 345KV CKT 1'
12WP	00NR	2	'FROM->TO'	G11_050	'CIMARRON - DRAPER LAKE 345KV CKT 1'	717	0.052	103.99	'AI43'
12WP	00NR	2	'FROM->TO'	G11_050	'CIMARRON - DRAPER LAKE 345KV CKT 1'	717	0.052	103.99	'7LUTESVIL 345.00 - 7ST FRANC 345.00 345KV CKT 1'
12WP	00NR	2	'FROM->TO'	G11_050	'CIMARRON - DRAPER LAKE 345KV CKT 1'	717	0.052	102.66	'AMRN_OUTS5'
12WP	00NR	2	'FROM->TO'	G11_050	'CIMARRON - DRAPER LAKE 345KV CKT 1'	717	0.052	102.24	'DELL 500 - INDEPENDENCE 500KV CKT 1'
13WP	00NR	2	'FROM->TO'	G11_050	'CIMARRON - DRAPER LAKE 345KV CKT 1'	717	0.052	106.88	'NELSON - RICHARD 500KV CKT 1'
12WP	00NR	2	'FROM->TO'	G11_050	'CIMARRON - DRAPER LAKE 345KV CKT 1'	717	0.052	104.27	'GRAND ISLAND - SWEETWATER 345KV CKT 1'
13WP	00NR	2	'FROM->TO'	G11_050	'CIMARRON - DRAPER LAKE 345KV CKT 1'	717	0.052	103.99	'DBL-WWRD-BVR'
13WP	00NR	2	'FROM->TO'	G11_050	'CIMARRON - DRAPER LAKE 345KV CKT 1'	717	0.052	108.12	'CLINTON - MONTROSE 161KV CKT 1'
13WP	00NR	2	'FROM->TO'	G11_050	'CIMARRON - DRAPER LAKE 345KV CKT 1'	717	0.052	106.74	'BAXTER WILSON SES - PERRYVILLE 500KV CKT 1'
12WP	00NR	2	'FROM->TO'	G11_050	'CIMARRON - DRAPER LAKE 345KV CKT 1'	717	0.052	104.72	'36 & MERIDIAN - PENNSYLVANIA 138KV CKT 1'
12WP	00NR	2	'FROM->TO'	G11_050	'CIMARRON - DRAPER LAKE 345KV CKT 1'	717	0.052	103.86	'MOORE - PAULINE 345KV CKT 1'
13WP	00NR	2	'FROM->TO'	G11_050	'CIMARRON - DRAPER LAKE 345KV CKT 1'	717	0.052	108.68	'MCELROY - STILLWATER 138KV CKT 1'
13WP	00NR	2	'FROM->TO'	G11_050	'CIMARRON - DRAPER LAKE 345KV CKT 1'	717	0.052	108.43	'KINZE - MCELROY 138KV CKT 1'
13WP	00NR	2	'FROM->TO'	G11_050	'CIMARRON - DRAPER LAKE 345KV CKT 1'	717	0.052	108.05	'OUMED 4 - STONEWALL 138KV CKT 1'
13WP	00NR	2	'FROM->TO'	G11_050	'CIMARRON - DRAPER LAKE 345KV CKT 1'	717	0.052	107.99	'OUMED 4 - PARK PLACE 138KV CKT 1'
13WP	00NR	2	'FROM->TO'	G11_050	'CIMARRON - DRAPER LAKE 345KV CKT 1'	717	0.052	107.97	'NEOSHO (NEOSHO2X) 345/161/13.8KV TRANSFORMER CKT 1'
13WP	00NR	2	'FROM->TO'	G11_050	'CIMARRON - DRAPER LAKE 345KV CKT 1'	717	0.052	107.92	'SAPULPA ROAD - WEKIWA 345KV CKT 1'
13WP	00NR	2	'FROM->TO'	G11_050	'CIMARRON - DRAPER LAKE 345KV CKT 1'	717	0.052	106.76	'DBL-CLRK-G11'
13WP	00NR	2	'FROM->TO'	G11_050	'CIMARRON - DRAPER LAKE 345KV CKT 1'	717	0.052	106.33	'DBL-THIS-CLR'
12WP	00NR	2	'FROM->TO'	G11_050	'CIMARRON - DRAPER LAKE 345KV CKT 1'	717	0.052	103.66	'MAGNET COVE - SHERIDAN EHV 500KV CKT 1'
12WP	00NR	2	'FROM->TO'	G11_050	'CIMARRON - DRAPER LAKE 345KV CKT 1'	717	0.052	102.69	'SEMINOLE - VANOSS 138KV CKT 1'
13WP	00NR	2	'FROM->TO'	G11_050	'CIMARRON - DRAPER LAKE 345KV CKT 1'	717	0.052	109.48	'HORSESHOE LAKE - JONES TAP 138KV CKT 1'
13WP	00NR	2	'FROM->TO'	G11_050	'CIMARRON - DRAPER LAKE 345KV CKT 1'	717	0.052	108.39	'8DANIEL 500.00 - MCKNIGHT 500KV CKT 1'
12WP	00NR	2	'FROM->TO'	G11_050	'CIMARRON - DRAPER LAKE 345KV CKT 1'	717	0.052	103.80	'NEOSHO (NEOSHO2X) 345/161/13.8KV TRANSFORMER CKT 1'
12WP	00NR	2	'FROM->TO'	G11_050	'CIMARRON - DRAPER LAKE 345KV CKT 1'	717	0.052	103.73	'SHERIDAN EHV - WHITE BLUFF 500KV CKT 1'
13WP	00NR	2	'FROM->TO'	G11_050	'CIMARRON - DRAPER LAKE 345KV CKT 1'	717	0.052	108.06	'OGE3TERM28'
13WP	00NR	2	'FROM->TO'	G11_050	'CIMARRON - DRAPER LAKE 345KV CKT 1'	717	0.052	108.03	'CLEO CORNER - MEN TAP 138KV CKT 1'
13WP	00NR	2	'FROM->TO'	G11_050	'CIMARRON - DRAPER LAKE 345KV CKT 1'	717	0.052	108.02	'IMO TAP - MEN TAP 138KV CKT 1'
13WP	00NR	2	'FROM->TO'	G11_050	'CIMARRON - DRAPER LAKE 345KV CKT 1'	717	0.052	107.94	'CELE-WELLOP1'
12WP	00NR	2	'FROM->TO'	G11_050	'CIMARRON - DRAPER LAKE 345KV CKT 1'	717	0.052	103.95	'HAMMETT TAP - HAMMETT2 138KV CKT 1'
12WP	00NR	2	'FROM->TO'	G11_050	'CIMARRON - DRAPER LAKE 345KV CKT 1'	717	0.052	103.84	'HAMMETT2 - MEEKER 138KV CKT 1'
12WP	00NR	2	'FROM->TO'	G11_050	'CIMARRON - DRAPER LAKE 345KV CKT 1'	717	0.052	103.68	'FRANKS - SALEM 345KV CKT 1'
13WP	00NR	2	'FROM->TO'	G11_050	'CIMARRON - DRAPER LAKE 345KV CKT 1'	717	0.052	108.05	'ATCHSNT3 345.00 - BOONEVILLE 345KV CKT 1'
13WP	00NR	2	'FROM->TO'	G11_050	'CIMARRON - DRAPER LAKE 345KV CKT 1'	717	0.052	107.98	'ATCHSNT3 345.00 - COOPER 345KV CKT 1'
13WP	00NR	2	'FROM->TO'	G11_050	'CIMARRON - DRAPER LAKE 345KV CKT 1'	717	0.052	107.97	'ATC_B2_8E2'
12WP	00NR	2	'FROM->TO'	G11_050	'CIMARRON - DRAPER LAKE 345KV CKT 1'	717	0.052	103.89	'CLINTON - MONTROSE 161KV CKT 1'
12WP	00NR	2	'FROM->TO'	G11_050	'CIMARRON - DRAPER LAKE 345KV CKT 1'	717	0.052	103.76	'BROOKLINE - MORGAN 345KV CKT 1'
13WP	00NR	2	'FROM->TO'	G11_050	'CIMARRON - DRAPER LAKE 345KV CKT 1'	717	0.052	108.03	'GLASS MOUNTAIN - MOORELAND 138KV CKT 1'
13WP	00NR	2	'FROM->TO'	G11_050	'CIMARRON - DRAPER LAKE 345KV CKT 1'	717	0.052	108.03	'CLEO CORNER - GLASS MOUNTAIN 138KV CKT 1'
13WP	00NR	2	'FROM->TO'	G11_050	'CIMARRON - DRAPER LAKE 345KV CKT 1'	717	0.052	107.95	'HEFNER - TULSA 138KV CKT 1'
13WP	00NR	2	'FROM->TO'	G11_050	'CIMARRON - DRAPER LAKE 345KV CKT 1'	717	0.052	106.90	'BAXTER WILSON SES - RAY BRASWELL SES 500KV CKT 1'
13WP	00NR	2	'FROM->TO'	G11_050	'CIMARRON - DRAPER LAKE 345KV CKT 1'	717	0.052	106.81	'CANADIAN RIVER - MCALESTER SOUTH 138KV CKT 1'
13WP	00NR	2	'FROM->TO'	G11_050	'CIMARRON - DRAPER LAKE 345KV CKT 1'	717	0.052	106.80	'CANADIAN RIVER () 345/138/13.8KV TRANSFORMER CKT 1'
12WP	00NR	2	'FROM->TO'	G11_050	'CIMARRON - DRAPER LAKE 345KV CKT 1'	717	0.052	104.47	'MCELROY - STILLWATER 138KV CKT 1'
12WP	00NR	2	'FROM->TO'	G11_050	'CIMARRON - DRAPER LAKE 345KV CKT 1'	717	0.052	104.23	'KINZE - MCELROY 138KV CKT 1'
12WP	00NR	2	'FROM->TO'	G11_050	'CIMARRON - DRAPER LAKE 345KV CKT 1'	717	0.052	103.82	'OUMED 4 - STONEWALL 138KV CKT 1'
12WP	00NR	2	'FROM->TO'	G11_050	'CIMARRON - DRAPER LAKE 345KV CKT 1'	717	0.052	103.74	'OUMED 4 - PARK PLACE 138KV CKT 1'
13WP	00NR	2	'FROM->TO'	G11_050	'CIMARRON - DRAPER LAKE 345KV CKT 1'	717	0.052	108.31	'OGE3TERM19'
12WP	00NR	2	'FROM->TO'	G11_050	'CIMARRON - DRAPER LAKE 345KV CKT 1'	717	0.052	104.11	'8DANIEL 500.00 - MCKNIGHT 500KV CKT 1'
12WP	00NR	2	'FROM->TO'	G11_050	'CIMARRON - DRAPER LAKE 345KV CKT 1'	717	0.052	103.84	'CLEO CORNER - MEN TAP 138KV CKT 1'
12WP	00NR	2	'FROM->TO'	G11_050	'CIMARRON - DRAPER LAKE 345KV CKT 1'	717	0.052	103.83	'IMO TAP - MEN TAP 138KV CKT 1'
13WP	00NR	2	'FROM->TO'	G11_050	'CIMARRON - DRAPER LAKE 345KV CKT 1'	717	0.052	108.40	'OGE3TERM13'
13WP	00NR	2	'FROM->TO'	G11_050	'CIMARRON - DRAPER LAKE 345KV CKT 1'	717	0.052	108.18	'GRDA-OPGD-05'

SEASON	GROUP	SCENARIO	DIRECTION	SOURCE	MONITORED ELEMENT	RATE B (MVA)	TDF	(%MVA) LOADING	CONTINGENCY
12WP	00NR	2	'FROM->TO'	G11_050	'CIMARRON - DRAPER LAKE 345KV CKT 1'	717	0.052	105.14	'HORSESHOE LAKE - JONES TAP 138KV CKT 1'
12WP	00NR	2	'FROM->TO'	G11_050	'CIMARRON - DRAPER LAKE 345KV CKT 1'	717	0.052	103.68	'ATC_B2_8E2'
13WP	00NR	2	'FROM->TO'	G11_050	'CIMARRON - DRAPER LAKE 345KV CKT 1'	717	0.052	109.42	'OGE3TERM12'
13WP	00NR	2	'FROM->TO'	G11_050	'CIMARRON - DRAPER LAKE 345KV CKT 1'	717	0.052	107.99	'A059'
13WP	00NR	2	'FROM->TO'	G11_050	'CIMARRON - DRAPER LAKE 345KV CKT 1'	717	0.052	107.99	'EUREKA SPRIN'
12WP	00NR	2	'FROM->TO'	G11_050	'CIMARRON - DRAPER LAKE 345KV CKT 1'	717	0.052	103.84	'CLEO CORNER - GLASS MOUNTAIN 138KV CKT 1'
12WP	00NR	2	'FROM->TO'	G11_050	'CIMARRON - DRAPER LAKE 345KV CKT 1'	717	0.052	103.82	'GLASS MOUNTAIN - MOORELAND 138KV CKT 1'
12WP	00NR	2	'FROM->TO'	G11_050	'CIMARRON - DRAPER LAKE 345KV CKT 1'	717	0.052	103.82	'ATCHSNT3 345.00 - BOONEVILLE 345KV CKT 1'
12WP	00NR	2	'FROM->TO'	G11_050	'CIMARRON - DRAPER LAKE 345KV CKT 1'	717	0.052	103.76	'ATCHSNT3 345.00 - COOPER 345KV CKT 1'
12WP	00NR	2	'FROM->TO'	G11_050	'CIMARRON - DRAPER LAKE 345KV CKT 1'	717	0.052	103.71	'HEFNER - TULSA 138KV CKT 1'
12WP	00NR	2	'FROM->TO'	G11_050	'CIMARRON - DRAPER LAKE 345KV CKT 1'	717	0.052	102.74	'BAXTER WILSON SES - RAY BRASWELL SES 500KV CKT 1'
12WP	00NR	2	'FROM->TO'	G11_050	'CIMARRON - DRAPER LAKE 345KV CKT 1'	717	0.052	102.57	'AI12'
12WP	00NR	2	'FROM->TO'	G11_050	'CIMARRON - DRAPER LAKE 345KV CKT 1'	717	0.052	102.57	'BROOKLINE - SUB 383 - MONETT 345KV CKT 1'
12WP	00NR	2	'FROM->TO'	G11_050	'CIMARRON - DRAPER LAKE 345KV CKT 1'	717	0.052	102.57	'FLINT CREEK - SUB 383 - MONETT 345KV CKT 1'
17WP	00NR	2	'FROM->TO'	G11_050	'CIMARRON - DRAPER LAKE 345KV CKT 1'	717	0.052	101.34	'DBL-THIS-WWR'
13WP	00NR	2	'FROM->TO'	G11_050	'CIMARRON - DRAPER LAKE 345KV CKT 1'	717	0.052	116.03	'GEN336821 1-GRAND GULF UNIT'
13WP	00NR	2	'FROM->TO'	G11_050	'CIMARRON - DRAPER LAKE 345KV CKT 1'	717	0.052	115.71	'GEN336153 1-WATERFORD UNIT#3'
13WP	00NR	2	'FROM->TO'	G11_050	'CIMARRON - DRAPER LAKE 345KV CKT 1'	717	0.052	114.57	'GEN337911 1-ARKANSAS NUCLEAR ONE UNIT #2'
13WP	00NR	2	'FROM->TO'	G11_050	'CIMARRON - DRAPER LAKE 345KV CKT 1'	717	0.052	114.50	'GEN335831 1-RIVERBEND UNIT#1'
13WP	00NR	2	'FROM->TO'	G11_050	'CIMARRON - DRAPER LAKE 345KV CKT 1'	717	0.052	113.64	'GEN501801 1-DOLET HILLS UNIT1'
13WP	00NR	2	'FROM->TO'	G11_050	'CIMARRON - DRAPER LAKE 345KV CKT 1'	717	0.052	113.40	'GEN337910 1-ARKANSAS NUCLEAR ONE UNIT #1'
13WP	00NR	2	'FROM->TO'	G11_050	'CIMARRON - DRAPER LAKE 345KV CKT 1'	717	0.052	113.14	'GEN520947 1-HUGO1'
13WP	00NR	2	'FROM->TO'	G11_050	'CIMARRON - DRAPER LAKE 345KV CKT 1'	717	0.052	112.60	'GEN337652 1-WHITE BLUFF UNIT #1'
13WP	00NR	2	'FROM->TO'	G11_050	'CIMARRON - DRAPER LAKE 345KV CKT 1'	717	0.052	112.49	'GEN515040 1-SEMINOLE 1G'
13WP	00NR	2	'FROM->TO'	G11_050	'CIMARRON - DRAPER LAKE 345KV CKT 1'	717	0.052	112.40	'GEN509403 1-PIRKEY GENERATION'
13WP	00NR	2	'FROM->TO'	G11_050	'CIMARRON - DRAPER LAKE 345KV CKT 1'	717	0.052	112.40	'GEN509416 1-TURK GENERATION'
13WP	00NR	2	'FROM->TO'	G11_050	'CIMARRON - DRAPER LAKE 345KV CKT 1'	717	0.052	112.30	'GEN337653 1-WHITE BLUFF UNIT #2'
13WP	00NR	2	'FROM->TO'	G11_050	'CIMARRON - DRAPER LAKE 345KV CKT 1'	717	0.052	112.28	'GEN515042 1-SEMINOLE 3G'
13WP	00NR	2	'FROM->TO'	G11_050	'CIMARRON - DRAPER LAKE 345KV CKT 1'	717	0.052	112.20	'GEN336251 1-NINEMILE POINT UNIT#4'
13WP	00NR	2	'FROM->TO'	G11_050	'CIMARRON - DRAPER LAKE 345KV CKT 1'	717	0.052	112.14	'GEN501813 1-RODEMACHER UNIT 3'
13WP	00NR	2	'FROM->TO'	G11_050	'CIMARRON - DRAPER LAKE 345KV CKT 1'	717	0.052	112.04	'GEN338146 1-INDEPENDENCE UNIT #2'
13WP	00NR	2	'FROM->TO'	G11_050	'CIMARRON - DRAPER LAKE 345KV CKT 1'	717	0.052	112.00	'GEN338143 1-INDEPENDENCE UNIT #1'
13WP	00NR	2	'FROM->TO'	G11_050	'CIMARRON - DRAPER LAKE 345KV CKT 1'	717	0.052	111.90	'GEN337041 1-GERALD ANDRUS'
13WP	00NR	2	'FROM->TO'	G11_050	'CIMARRON - DRAPER LAKE 345KV CKT 1'	717	0.052	111.65	'GEN515041 1-SEMINOLE 2G'
13WP	00NR	2	'FROM->TO'	G11_050	'CIMARRON - DRAPER LAKE 345KV CKT 1'	717	0.052	111.61	'GEN509406 1-WELSH #3'
13WP	00NR	2	'FROM->TO'	G11_050	'CIMARRON - DRAPER LAKE 345KV CKT 1'	717	0.052	111.61	'GEN509405 1-WELSH #2'
13WP	00NR	2	'FROM->TO'	G11_050	'CIMARRON - DRAPER LAKE 345KV CKT 1'	717	0.052	111.61	'GEN509404 1-WELSH #1'
13WP	00NR	2	'FROM->TO'	G11_050	'CIMARRON - DRAPER LAKE 345KV CKT 1'	717	0.052	111.60	'GEN501812 1-RODEMACHER UNIT 2'
13WP	00NR	2	'FROM->TO'	G11_050	'CIMARRON - DRAPER LAKE 345KV CKT 1'	717	0.052	111.59	'GEN334440 1-SABINE UNIT 4'
13WP	00NR	2	'FROM->TO'	G11_050	'CIMARRON - DRAPER LAKE 345KV CKT 1'	717	0.052	111.47	'GEN335206 1-NELSON UNIT 6'
13WP	00NR	2	'FROM->TO'	G11_050	'CIMARRON - DRAPER LAKE 345KV CKT 1'	717	0.052	111.34	'GEN515226 1-MUSKOGEE 6G'
13WP	00NR	2	'FROM->TO'	G11_050	'CIMARRON - DRAPER LAKE 345KV CKT 1'	717	0.052	111.25	'GEN336831 1-BAXTER WILSON SES'
13WP	00NR	2	'FROM->TO'	G11_050	'CIMARRON - DRAPER LAKE 345KV CKT 1'	717	0.052	111.12	'GEN334441 1-SABINE UNIT 5'
13WP	00NR	2	'FROM->TO'	G11_050	'CIMARRON - DRAPER LAKE 345KV CKT 1'	717	0.052	110.94	'GEN338388 1-1PLUMPT 23.000'
13WP	00NR	2	'FROM->TO'	G11_050	'CIMARRON - DRAPER LAKE 345KV CKT 1'	717	0.052	110.84	'GEN515223 1-MUSKOGEE 4G'
13WP	00NR	2	'FROM->TO'	G11_050	'CIMARRON - DRAPER LAKE 345KV CKT 1'	717	0.052	110.79	'GEN515225 1-MUSKOGEE 5G'
13WP	00NR	2	'FROM->TO'	G11_050	'CIMARRON - DRAPER LAKE 345KV CKT 1'	717	0.052	109.59	'GEN336170 1-GULF OXY U4'
13WP	00NR	2	'FROM->TO'	G11_050	'CIMARRON - DRAPER LAKE 345KV CKT 1'	717	0.052	109.41	'GEN334070 1-LEWIS CREEK 1'
13WP	00NR	2	'FROM->TO'	G11_050	'CIMARRON - DRAPER LAKE 345KV CKT 1'	717	0.052	109.38	'GEN334071 1-LEWIS CREEK 2'
13WP	00NR	2	'FROM->TO'	G11_050	'CIMARRON - DRAPER LAKE 345KV CKT 1'	717	0.052	109.24	'GEN300006 1-NEW MADRID UNIT 1'
13WP	00NR	2	'FROM->TO'	G11_050	'CIMARRON - DRAPER LAKE 345KV CKT 1'	717	0.052	109.22	'GEN300007 1-NEW MADRID UNIT 2'
13WP	00NR	2	'FROM->TO'	G11_050	'CIMARRON - DRAPER LAKE 345KV CKT 1'	717	0.052	109.11	'GEN514998 1-MCCLAIN UNIT 1'
13WP	00NR	2	'FROM->TO'	G11_050	'CIMARRON - DRAPER LAKE 345KV CKT 1'	717	0.052	109.10	'GEN334432 1-SABINE UNIT 2'
13WP	00NR	2	'FROM->TO'	G11_050	'CIMARRON - DRAPER LAKE 345KV CKT 1'	717	0.052	109.05	'GEN509394 1-FLINT CREEK'
13WP	00NR	2	'FROM->TO'	G11_050	'CIMARRON - DRAPER LAKE 345KV CKT 1'	717	0.052	109.03	'GEN334030 1-FRONTIER UNIT 1'
13WP	00NR	2	'FROM->TO'	G11_050	'CIMARRON - DRAPER LAKE 345KV CKT 1'	717	0.052	109.03	'GEN334031 1-FRONTIER UNIT 2'
13WP	00NR	2	'FROM->TO'	G11_050	'CIMARRON - DRAPER LAKE 345KV CKT 1'	717	0.052	109.02	'GEN509393 S1-ARSENAL HILL GENS #4 (STALL)'
13WP	00NR	2	'FROM->TO'	G11_050	'CIMARRON - DRAPER LAKE 345KV CKT 1'	717	0.052	109.02	'GEN334431 1-SABINE UNIT 1'
13WP	00NR	2	'FROM->TO'	G11_050	'CIMARRON - DRAPER LAKE 345KV CKT 1'	717	0.052	108.98	'GEN335612 1-WILLOW GLENN UNIT#2'
13WP	00NR	2	'FROM->TO'	G11_050	'CIMARRON - DRAPER LAKE 345KV CKT 1'	717	0.052	108.96	'GEN511843 1-RIVERSIDE STATION #2'
13WP	00NR	2	'FROM->TO'	G11_050	'CIMARRON - DRAPER LAKE 345KV CKT 1'	717	0.052	108.89	'GEN509391 G1-ARSENAL HILL GENS #2 (STALL)'
13WP	00NR	2	'FROM->TO'	G11_050	'CIMARRON - DRAPER LAKE 345KV CKT 1'	717	0.052	108.89	'GEN509392 G2-ARSENAL HILL GENS #3 (STALL)'
13WP	00NR	2	'FROM->TO'	G11_050	'CIMARRON - DRAPER LAKE 345KV CKT 1'	717	0.052	108.85	'GEN509408 1-WILKES #2'
13WP	00NR	2	'FROM->TO'	G11_050	'CIMARRON - DRAPER LAKE 345KV CKT 1'	717	0.052	108.83	'GEN512688 2-GRDA1 GSU2 22'
13WP	00NR	2	'FROM->TO'	G11_050	'CIMARRON - DRAPER LAKE 345KV CKT 1'	717	0.052	108.77	'GEN503909 1-FULTONU1 1 16.000'
13WP	00NR	2	'FROM->TO'	G11_050	'CIMARRON - DRAPER LAKE 345KV CKT 1'	717	0.052	108.73	'GEN337428 1-PERYVILLE UNIT #1'
13WP	00NR	2	'FROM->TO'	G11_050	'CIMARRON - DRAPER LAKE 345KV CKT 1'	717	0.052	108.73	'GEN337430 1-PERYVILLE UNIT #3'
13WP	00NR	2	'FROM->TO'	G11_050	'CIMARRON - DRAPER LAKE 345KV CKT 1'	717	0.052	108.71	'GEN512689 1-GRDA1 GSU1 22'
13WP	00NR	2	'FROM->TO'	G11_050	'CIMARRON - DRAPER LAKE 345KV CKT 1'	717	0.052	108.69	'GEN337429 1-PERYVILLE UNIT #2'
13WP	00NR	2	'FROM->TO'	G11_050	'CIMARRON - DRAPER LAKE 345KV CKT 1'	717	0.052	108.69	'GEN337432 1-PERYVILLE UNIT #5'
13WP	00NR	2	'FROM->TO'	G11_050	'CIMARRON - DRAPER LAKE 345KV CKT 1'	717	0.052	108.68	'GEN506752 1-LEBROCK GAS 1'
13WP	00NR	2	'FROM->TO'	G11_050	'CIMARRON - DRAPER LAKE 345KV CKT 1'	717	0.052	108.63	'GEN335075 1-DYNEGY#1'
13WP	00NR	2	'FROM->TO'	G11_050	'CIMARRON - DRAPER LAKE 345KV CKT 1'	717	0.052	108.62	'GEN336167 1-GULF OXY U1'
13WP	00NR	2	'FROM->TO'	G11_050	'CIMARRON - DRAPER LAKE 345KV CKT 1'	717	0.052	108.62	'GEN336168 1-GULF OXY U2'
13WP	00NR	2	'FROM->TO'	G11_050	'CIMARRON - DRAPER LAKE 345KV CKT 1'	717	0.052	108.62	'GEN336169 1-GULF OXY U3'
13WP	00NR	2	'FROM->TO'	G11_050	'CIMARRON - DRAPER LAKE 345KV CKT 1'	717	0.052	108.61	'GEN318007 1-5MOROW161 161.00'
13WP	00NR	2	'FROM->TO'	G11_050	'CIMARRON - DRAPER LAKE 345KV CKT 1'	717	0.052	108.61	'GEN335203 1-NELSON UNIT 3'
13WP	00NR	2	'FROM->TO'	G11_050	'CIMARRON - DRAPER LAKE 345KV CKT 1'	717	0.052	108.58	'GEN337421 1-OUCHITA CTG1'

SEASON	GROUP	SCENARIO	DIRECTION	SOURCE	MONITORED ELEMENT	RATE B (MVA)	TDF	(%MVA) LOADING	CONTINGENCY
13WP	00NR	2	'FROM->TO'	G11_050	'CIMARRON - DRAPER LAKE 345KV CKT 1'	717	0.052	108.58	'GEN337423 1-OUCHITA CTG2'
13WP	00NR	2	'FROM->TO'	G11_050	'CIMARRON - DRAPER LAKE 345KV CKT 1'	717	0.052	108.58	'GEN337425 1-OUCHITA CTG3'
13WP	00NR	2	'FROM->TO'	G11_050	'CIMARRON - DRAPER LAKE 345KV CKT 1'	717	0.052	108.56	'GEN511840 1-NORTHEASTERN STATION #3'
13WP	00NR	2	'FROM->TO'	G11_050	'CIMARRON - DRAPER LAKE 345KV CKT 1'	717	0.052	108.55	'GEN334392 1-EXXON MOBIL IPP 1'
13WP	00NR	2	'FROM->TO'	G11_050	'CIMARRON - DRAPER LAKE 345KV CKT 1'	717	0.052	108.54	'GEN511841 1-NORTHEASTERN STATION #4'
13WP	00NR	2	'FROM->TO'	G11_050	'CIMARRON - DRAPER LAKE 345KV CKT 1'	717	0.052	108.52	'GEN511839 1-NORTHEASTERN STATION #2'
13WP	00NR	2	'FROM->TO'	G11_050	'CIMARRON - DRAPER LAKE 345KV CKT 1'	717	0.052	108.48	'GEN337006 1-DUKE MCADAMS G1'
13WP	00NR	2	'FROM->TO'	G11_050	'CIMARRON - DRAPER LAKE 345KV CKT 1'	717	0.052	108.48	'GEN337007 1-DUKE MCADAMS G2'
13WP	00NR	2	'FROM->TO'	G11_050	'CIMARRON - DRAPER LAKE 345KV CKT 1'	717	0.052	108.46	'GEN337008 1-DUKE MCADAMS S1'
13WP	00NR	2	'FROM->TO'	G11_050	'CIMARRON - DRAPER LAKE 345KV CKT 1'	717	0.052	108.44	'GEN505432 1-SIKESTON'
13WP	00NR	2	'FROM->TO'	G11_050	'CIMARRON - DRAPER LAKE 345KV CKT 1'	717	0.052	108.41	'GEN338500 1-MCCLELLAN UNIT #1'
13WP	00NR	2	'FROM->TO'	G11_050	'CIMARRON - DRAPER LAKE 345KV CKT 1'	717	0.052	108.34	'GEN515266 1-AES 1G'
13WP	00NR	2	'FROM->TO'	G11_050	'CIMARRON - DRAPER LAKE 345KV CKT 1'	717	0.052	108.34	'GEN515267 1-AES 2G'
13WP	00NR	2	'FROM->TO'	G11_050	'CIMARRON - DRAPER LAKE 345KV CKT 1'	717	0.052	108.31	'GEN335611 1-WILLOW GLENN UNIT#1'
13WP	00NR	2	'FROM->TO'	G11_050	'CIMARRON - DRAPER LAKE 345KV CKT 1'	717	0.052	108.30	'GEN562053 1-G11_040_4 0.6900'
13WP	00NR	2	'FROM->TO'	G11_050	'CIMARRON - DRAPER LAKE 345KV CKT 1'	717	0.052	108.29	'GEN337954 1-LYNCH UNIT #3'
13WP	00NR	2	'FROM->TO'	G11_050	'CIMARRON - DRAPER LAKE 345KV CKT 1'	717	0.052	108.29	'GEN511938 1-OEC STEAM # 1'
13WP	00NR	2	'FROM->TO'	G11_050	'CIMARRON - DRAPER LAKE 345KV CKT 1'	717	0.052	108.27	'GEN335201 1-NELSON UNIT 1'
13WP	00NR	2	'FROM->TO'	G11_050	'CIMARRON - DRAPER LAKE 345KV CKT 1'	717	0.052	108.25	'GEN335202 1-NELSON UNIT 2'
13WP	00NR	2	'FROM->TO'	G11_050	'CIMARRON - DRAPER LAKE 345KV CKT 1'	717	0.052	108.23	'GEN336944 1-REX BROWN'
13WP	00NR	2	'FROM->TO'	G11_050	'CIMARRON - DRAPER LAKE 345KV CKT 1'	717	0.052	108.22	'OGE3TERM3'
13WP	00NR	2	'FROM->TO'	G11_050	'CIMARRON - DRAPER LAKE 345KV CKT 1'	717	0.052	108.22	'GEN506749 1-EASTMAN GENERATION A'
13WP	00NR	2	'FROM->TO'	G11_050	'CIMARRON - DRAPER LAKE 345KV CKT 1'	717	0.052	108.18	'GEN511842 1-RIVERSIDE STATION #1'
13WP	00NR	2	'FROM->TO'	G11_050	'CIMARRON - DRAPER LAKE 345KV CKT 1'	717	0.052	108.17	'GEN562052 1-G11_040_3 0.6900'
13WP	00NR	2	'FROM->TO'	G11_050	'CIMARRON - DRAPER LAKE 345KV CKT 1'	717	0.052	108.16	'GEN337422 1-OUCHITA STG1'
13WP	00NR	2	'FROM->TO'	G11_050	'CIMARRON - DRAPER LAKE 345KV CKT 1'	717	0.052	108.16	'GEN337424 1-OUCHITA STG2'
13WP	00NR	2	'FROM->TO'	G11_050	'CIMARRON - DRAPER LAKE 345KV CKT 1'	717	0.052	108.16	'GEN337426 1-OUCHITA STG3'
13WP	00NR	2	'FROM->TO'	G11_050	'CIMARRON - DRAPER LAKE 345KV CKT 1'	717	0.052	108.13	'GEN335137 C4-PPG'
13WP	00NR	2	'FROM->TO'	G11_050	'CIMARRON - DRAPER LAKE 345KV CKT 1'	717	0.052	108.13	'GEN338510 1-1S1KNWRI'
13WP	00NR	2	'FROM->TO'	G11_050	'CIMARRON - DRAPER LAKE 345KV CKT 1'	717	0.052	108.13	'GEN338511 1-1C7KNWRI'
13WP	00NR	2	'FROM->TO'	G11_050	'CIMARRON - DRAPER LAKE 345KV CKT 1'	717	0.052	108.11	'GEN338513 1-BAILEY UNIT #1'
13WP	00NR	2	'FROM->TO'	G11_050	'CIMARRON - DRAPER LAKE 345KV CKT 1'	717	0.052	108.11	'GEN300003 1-THOMAS HILL UNIT 3'
13WP	00NR	2	'FROM->TO'	G11_050	'CIMARRON - DRAPER LAKE 345KV CKT 1'	717	0.052	108.06	'GEN500915 3-WESTERN KRAFT'
13WP	00NR	2	'FROM->TO'	G11_050	'CIMARRON - DRAPER LAKE 345KV CKT 1'	717	0.052	108.05	'GEN549893 2-SOUTHWEST 2'
13WP	00NR	2	'FROM->TO'	G11_050	'CIMARRON - DRAPER LAKE 345KV CKT 1'	717	0.052	108.05	'GEN300015 1-1SGPDEL 18.000'
13WP	00NR	2	'FROM->TO'	G11_050	'CIMARRON - DRAPER LAKE 345KV CKT 1'	717	0.052	108.05	'GEN300016 1-1G1GPDEL 18.000'
13WP	00NR	2	'FROM->TO'	G11_050	'CIMARRON - DRAPER LAKE 345KV CKT 1'	717	0.052	108.05	'GEN300017 1-1G2GPDEL 18.000'
13WP	00NR	2	'FROM->TO'	G11_050	'CIMARRON - DRAPER LAKE 345KV CKT 1'	717	0.052	108.04	'GEN503900 1-FITZHUGH CT1'
13WP	00NR	2	'FROM->TO'	G11_050	'CIMARRON - DRAPER LAKE 345KV CKT 1'	717	0.052	108.03	'GEN501910 1-ACADIA UNIT ST1'
13WP	00NR	2	'FROM->TO'	G11_050	'CIMARRON - DRAPER LAKE 345KV CKT 1'	717	0.052	108.03	'GEN334335 1-TOLEDO BEND'
13WP	00NR	2	'FROM->TO'	G11_050	'CIMARRON - DRAPER LAKE 345KV CKT 1'	717	0.052	108.02	'GEN334467 1-DUPONT UNIT#1'
13WP	00NR	2	'FROM->TO'	G11_050	'CIMARRON - DRAPER LAKE 345KV CKT 1'	717	0.052	108.02	'MORISNT4 138.00 - SOONER 138KV CKT 1'
13WP	00NR	2	'FROM->TO'	G11_050	'CIMARRON - DRAPER LAKE 345KV CKT 1'	717	0.052	108.01	'GEN335546 3-DOW COGEN'
13WP	00NR	2	'FROM->TO'	G11_050	'CIMARRON - DRAPER LAKE 345KV CKT 1'	717	0.052	108.01	'GEN337124 5-LS POWER BATESVILLE'
13WP	00NR	2	'FROM->TO'	G11_050	'CIMARRON - DRAPER LAKE 345KV CKT 1'	717	0.052	107.99	'GEN318008 3-5MOSEL161 161.00'
13WP	00NR	2	'FROM->TO'	G11_050	'CIMARRON - DRAPER LAKE 345KV CKT 1'	717	0.052	107.97	'GEN336176 1-UNION CARBIDE COGEN GT1'
13WP	00NR	2	'FROM->TO'	G11_050	'CIMARRON - DRAPER LAKE 345KV CKT 1'	717	0.052	107.97	'GEN336177 1-UNION CARBIDE COGEN GT2'
13WP	00NR	2	'FROM->TO'	G11_050	'CIMARRON - DRAPER LAKE 345KV CKT 1'	717	0.052	107.95	'GEN509409 1-WILKES #3'
13WP	00NR	2	'FROM->TO'	G11_050	'CIMARRON - DRAPER LAKE 345KV CKT 1'	717	0.052	107.47	'BASE CASE'
13WP	00NR	2	'FROM->TO'	G11_050	'CIMARRON - DRAPER LAKE 345KV CKT 1'	717	0.052	107.06	'DRAPER LAKE - DRPCAPS4 138.00 138KV CKT 1'
13WP	00NR	2	'FROM->TO'	G11_050	'CIMARRON - DRAPER LAKE 345KV CKT 1'	717	0.052	106.96	'GEN532663 1-LAWRENCE ENERGY CENTER UNIT 5'
13WP	00NR	2	'FROM->TO'	G11_050	'CIMARRON - DRAPER LAKE 345KV CKT 1'	717	0.052	106.94	'GEN542957 1-IATAN UNIT #1'
13WP	00NR	2	'FROM->TO'	G11_050	'CIMARRON - DRAPER LAKE 345KV CKT 1'	717	0.052	106.93	'GEN542956 2-LACYGNE UNIT #2'
13WP	00NR	2	'FROM->TO'	G11_050	'CIMARRON - DRAPER LAKE 345KV CKT 1'	717	0.052	106.91	'GEN542955 1-LACYGNE UNIT #1'
13WP	00NR	2	'FROM->TO'	G11_050	'CIMARRON - DRAPER LAKE 345KV CKT 1'	717	0.052	106.90	'GEN542962 2-IATAN UNIT #2'
13WP	00NR	2	'FROM->TO'	G11_050	'CIMARRON - DRAPER LAKE 345KV CKT 1'	717	0.052	106.83	'GEN640009 1-COOPER NUCLEAR STATION'
13WP	00NR	2	'FROM->TO'	G11_050	'CIMARRON - DRAPER LAKE 345KV CKT 1'	717	0.052	106.75	'GEN562092 1-G11_058_4 0.6900'
13WP	00NR	2	'FROM->TO'	G11_050	'CIMARRON - DRAPER LAKE 345KV CKT 1'	717	0.052	106.72	'GEN562094 1-G11_058_5 0.6900'
13WP	00NR	2	'FROM->TO'	G11_050	'CIMARRON - DRAPER LAKE 345KV CKT 1'	717	0.052	106.66	'GEN562049 1-G11_012_3 0.6900'
13WP	00NR	2	'FROM->TO'	G11_050	'CIMARRON - DRAPER LAKE 345KV CKT 1'	717	0.052	106.66	'GEN523462 1-BLACKHAWK GEN #2'
13WP	00NR	2	'FROM->TO'	G11_050	'CIMARRON - DRAPER LAKE 345KV CKT 1'	717	0.052	106.66	'GEN523461 1-BLACKHAWK GEN #1'
13WP	00NR	2	'FROM->TO'	G11_050	'CIMARRON - DRAPER LAKE 345KV CKT 1'	717	0.052	106.62	'GEN560386 1-G10-029-1 0.6900'
13WP	00NR	2	'FROM->TO'	G11_050	'CIMARRON - DRAPER LAKE 345KV CKT 1'	717	0.052	106.62	'GEN560387 1-G10-029-2 0.6900'
13WP	00NR	2	'FROM->TO'	G11_050	'CIMARRON - DRAPER LAKE 345KV CKT 1'	717	0.052	106.62	'GEN560388 1-G10-029-3 0.6900'
13WP	00NR	2	'FROM->TO'	G11_050	'CIMARRON - DRAPER LAKE 345KV CKT 1'	717	0.052	106.61	'GEN562059 1-G11_042_3 0.6900'
13WP	00NR	2	'FROM->TO'	G11_050	'CIMARRON - DRAPER LAKE 345KV CKT 1'	717	0.052	106.58	'GEN560669 1-G10_057 0.6900'
13WP	00NR	2	'FROM->TO'	G11_050	'CIMARRON - DRAPER LAKE 345KV CKT 1'	717	0.052	106.58	'GEN560714 1-G10_061_3 0.6900'
13WP	00NR	2	'FROM->TO'	G11_050	'CIMARRON - DRAPER LAKE 345KV CKT 1'	717	0.052	106.48	'GEN562065 1-G11_044_3 0.6900'
13WP	00NR	2	'FROM->TO'	G11_050	'CIMARRON - DRAPER LAKE 345KV CKT 1'	717	0.052	106.46	'GEN527165 1-Mustang Gen #5'
13WP	00NR	2	'FROM->TO'	G11_050	'CIMARRON - DRAPER LAKE 345KV CKT 1'	717	0.052	106.46	'GEN527164 1-MUSTANG GEN #4 22 KV'
13WP	00NR	2	'FROM->TO'	G11_050	'CIMARRON - DRAPER LAKE 345KV CKT 1'	717	0.052	106.45	'GEN532653 1-JEFFREY ENERGY CENTER UNIT 3'
13WP	00NR	2	'FROM->TO'	G11_050	'CIMARRON - DRAPER LAKE 345KV CKT 1'	717	0.052	106.45	'GEN527901 1-HOBBS PLANT #1 (CT)'
13WP	00NR	2	'FROM->TO'	G11_050	'CIMARRON - DRAPER LAKE 345KV CKT 1'	717	0.052	106.44	'GEN527902 1-HOBBS PLANT #2 (CT)'
13WP	00NR	2	'FROM->TO'	G11_050	'CIMARRON - DRAPER LAKE 345KV CKT 1'	717	0.052	106.42	'GEN532651 1-JEFFREY ENERGY CENTER UNIT 1'
13WP	00NR	2	'FROM->TO'	G11_050	'CIMARRON - DRAPER LAKE 345KV CKT 1'	717	0.052	106.41	'GEN532652 1-JEFFREY ENERGY CENTER UNIT 2'
13WP	00NR	2	'FROM->TO'	G11_050	'CIMARRON - DRAPER LAKE 345KV CKT 1'	717	0.052	106.40	'GEN527163 1-MUSTANG GEN #3 22 KV'
13WP	00NR	2	'FROM->TO'	G11_050	'CIMARRON - DRAPER LAKE 345KV CKT 1'	717	0.052	106.38	'GEN527161 1-MUSTANG GEN #1'
13WP	00NR	2	'FROM->TO'	G11_050	'CIMARRON - DRAPER LAKE 345KV CKT 1'	717	0.052	106.37	'GEN640011 2-GERALD GENTLEMAN STATION UNIT 2'

SEASON	GROUP	SCENARIO	DIRECTION	SOURCE	MONITORED ELEMENT	RATE B (MVA)	TDF	(%MVA) LOADING	CONTINGENCY
13WP	00NR	2	'FROM->TO'	G11_050	'CIMARRON - DRAPER LAKE 345KV CKT 1'	717	0.052	106.37	'GEN527162 1-MUSTANG GEN #2'
13WP	00NR	2	'FROM->TO'	G11_050	'CIMARRON - DRAPER LAKE 345KV CKT 1'	717	0.052	106.36	'GEN562071 1-G11_048_2 18.000'
13WP	00NR	2	'FROM->TO'	G11_050	'CIMARRON - DRAPER LAKE 345KV CKT 1'	717	0.052	106.36	'GEN560600 1-G07-02 15.750'
13WP	00NR	2	'FROM->TO'	G11_050	'CIMARRON - DRAPER LAKE 345KV CKT 1'	717	0.052	106.35	'GEN562035 1-G11_016_3 0.6900'
13WP	00NR	2	'FROM->TO'	G11_050	'CIMARRON - DRAPER LAKE 345KV CKT 1'	717	0.052	106.29	'GEN560356 1-G10-53 0.6900'
13WP	00NR	2	'FROM->TO'	G11_050	'CIMARRON - DRAPER LAKE 345KV CKT 1'	717	0.052	106.26	'GEN520997 1-MORLND2'
13WP	00NR	2	'FROM->TO'	G11_050	'CIMARRON - DRAPER LAKE 345KV CKT 1'	717	0.052	106.25	'GEN562078 1-G11_051_3 0.6900'
13WP	00NR	2	'FROM->TO'	G11_050	'CIMARRON - DRAPER LAKE 345KV CKT 1'	717	0.052	106.22	'GEN560329 1-G10-45 0.6900'
13WP	00NR	2	'FROM->TO'	G11_050	'CIMARRON - DRAPER LAKE 345KV CKT 1'	717	0.052	106.20	'GEN527903 1-HOBBS PLANT #3 (ST)'
13WP	00NR	2	'FROM->TO'	G11_050	'CIMARRON - DRAPER LAKE 345KV CKT 1'	717	0.052	106.18	'GEN520998 1-MORLND3'
13WP	00NR	2	'FROM->TO'	G11_050	'CIMARRON - DRAPER LAKE 345KV CKT 1'	717	0.052	106.18	'GEN640010 1-GERALD GENTLEMAN STATION UNIT 1'
13WP	00NR	2	'FROM->TO'	G11_050	'CIMARRON - DRAPER LAKE 345KV CKT 1'	717	0.052	105.99	'GEN562032 1-G11_017_3 0.6900'
13WP	00NR	2	'FROM->TO'	G11_050	'CIMARRON - DRAPER LAKE 345KV CKT 1'	717	0.052	105.94	'GEN526333 1-JONES GEN #3 21 KV'
13WP	00NR	2	'FROM->TO'	G11_050	'CIMARRON - DRAPER LAKE 345KV CKT 1'	717	0.052	105.94	'GEN526334 1-JONES_4 116.500'
13WP	00NR	2	'FROM->TO'	G11_050	'CIMARRON - DRAPER LAKE 345KV CKT 1'	717	0.052	105.93	'GEN599891 1-OKLAUN'
13WP	00NR	2	'FROM->TO'	G11_050	'CIMARRON - DRAPER LAKE 345KV CKT 1'	717	0.052	105.86	'GEN514805 1-SOONER UNIT 1'
13WP	00NR	2	'FROM->TO'	G11_050	'CIMARRON - DRAPER LAKE 345KV CKT 1'	717	0.052	105.77	'GEN562042 1-G11_014_3 0.6900'
13WP	00NR	2	'FROM->TO'	G11_050	'CIMARRON - DRAPER LAKE 345KV CKT 1'	717	0.052	105.75	'GEN562014 1-G11_023_3 0.6900'
13WP	00NR	2	'FROM->TO'	G11_050	'CIMARRON - DRAPER LAKE 345KV CKT 1'	717	0.052	105.53	'GEN514806 1-SOONER UNIT 2'
13WP	00NR	2	'FROM->TO'	G11_050	'CIMARRON - DRAPER LAKE 345KV CKT 1'	717	0.052	105.49	'GEN531447 1-HOLCOMB GENERATOR'
13WP	00NR	2	'FROM->TO'	G11_050	'CIMARRON - DRAPER LAKE 345KV CKT 1'	717	0.052	105.24	'GEN562074 1-G11_049_3 0.6900'
13WP	00NR	2	'FROM->TO'	G11_050	'CIMARRON - DRAPER LAKE 345KV CKT 1'	717	0.052	105.07	'GEN562020 1-G11_021_3 0.6900'
13WP	00NR	2	'FROM->TO'	G11_050	'CIMARRON - DRAPER LAKE 345KV CKT 1'	717	0.052	105.03	'GEN562017 1-G11_022_3 0.6900'
13WP	00NR	2	'FROM->TO'	G11_050	'CIMARRON - DRAPER LAKE 345KV CKT 1'	717	0.052	104.95	'GEN523971 1-HARRINGTON GEN #1 24 KV'
13WP	00NR	2	'FROM->TO'	G11_050	'CIMARRON - DRAPER LAKE 345KV CKT 1'	717	0.052	104.85	'GEN523972 1-HARRINGTON GEN #2 24 KV'
13WP	00NR	2	'FROM->TO'	G11_050	'CIMARRON - DRAPER LAKE 345KV CKT 1'	717	0.052	104.85	'GEN523973 1-HARRINGTON GEN #3 24 KV'
13WP	00NR	2	'FROM->TO'	G11_050	'CIMARRON - DRAPER LAKE 345KV CKT 1'	717	0.052	104.58	'GEN562023 1-G11_020_3 0.6900'
13WP	00NR	2	'FROM->TO'	G11_050	'CIMARRON - DRAPER LAKE 345KV CKT 1'	717	0.052	104.58	'GEN562026 1-G11_019_3 0.6900'
13WP	00NR	2	'FROM->TO'	G11_050	'CIMARRON - DRAPER LAKE 345KV CKT 1'	717	0.052	104.46	'GEN560225 1-G10-43 18.000'
13WP	00NR	2	'FROM->TO'	G11_050	'CIMARRON - DRAPER LAKE 345KV CKT 1'	717	0.052	103.99	'GEN532751 1-WOLF CREEK GENERATING STATION UNIT 1'
13WP	00NR	2	'FROM->TO'	G11_050	'CIMARRON - DRAPER LAKE 345KV CKT 1'	717	0.052	103.68	'GEN525562 1-TOLK GEN #2 24 KV'
13WP	00NR	2	'FROM->TO'	G11_050	'CIMARRON - DRAPER LAKE 345KV CKT 1'	717	0.052	103.62	'GEN525561 1-TOLK GEN #1 24 KV'
13WP	00NR	2	'FROM->TO'	G11_050	'CIMARRON - DRAPER LAKE 345KV CKT 1'	717	0.052	103.41	'GEN562010 1-G11_024_3 0.6900'
13WP	00NR	2	'FROM->TO'	G11_050	'CIMARRON - DRAPER LAKE 345KV CKT 1'	717	0.052	103.39	'GEN560687 1-G11-007 0.5750'
13WP	00NR	2	'FROM->TO'	G11_050	'CIMARRON - DRAPER LAKE 345KV CKT 1'	717	0.052	101.03	'GEN560323 1-G10-40 0.6900'
13WP	00NR	2	'FROM->TO'	G11_050	'CIMARRON - DRAPER LAKE 345KV CKT 1'	717	0.052	100.88	'GEN562100 1-G11_054_3 0.6900'
13WP	00NR	2	'FROM->TO'	G11_050	'CIMARRON - DRAPER LAKE 345KV CKT 1'	717	0.052	106.96	'OGE3TERM41'
13WP	00NR	2	'FROM->TO'	G11_050	'CIMARRON - DRAPER LAKE 345KV CKT 1'	717	0.052	106.88	'G11_040_TAP 138.00 - POOLEVILLE 138KV CKT 1'
13WP	00NR	2	'FROM->TO'	G11_050	'CIMARRON - DRAPER LAKE 345KV CKT 1'	717	0.051	107.94	'5LOCSTGV - MAID 161KV CKT 1'
13WP	00NR	2	'FROM->TO'	G11_050	'CIMARRON - DRAPER LAKE 345KV CKT 1'	717	0.051	107.93	'5CDRCRST 161.00 - 5LOCSTGV 161KV CKT 1'
12WP	00NR	2	'FROM->TO'	G11_050	'CIMARRON - DRAPER LAKE 345KV CKT 1'	717	0.051	103.65	'LACYGNE - STILWELL 345KV CKT 1'
13WP	00NR	2	'FROM->TO'	G11_050	'CIMARRON - DRAPER LAKE 345KV CKT 1'	717	0.051	108.04	'EL RENO - ROMAN NOSE 138KV CKT 1'
13WP	00NR	2	'FROM->TO'	G11_050	'CIMARRON - DRAPER LAKE 345KV CKT 1'	717	0.051	108.03	'ROMAN NOSE - SOUTHARD 138KV CKT 1'
13WP	00NR	2	'FROM->TO'	G11_050	'CIMARRON - DRAPER LAKE 345KV CKT 1'	717	0.051	108.02	'DEWEY - SOUTHARD 138KV CKT 1'
12WP	00NR	2	'FROM->TO'	G11_050	'CIMARRON - DRAPER LAKE 345KV CKT 1'	717	0.051	112.24	'GEN336821 1-GRAND GULF UNIT'
12WP	00NR	2	'FROM->TO'	G11_050	'CIMARRON - DRAPER LAKE 345KV CKT 1'	717	0.051	111.75	'GEN336153 1-WATERFORD UNIT#3'
12WP	00NR	2	'FROM->TO'	G11_050	'CIMARRON - DRAPER LAKE 345KV CKT 1'	717	0.051	111.00	'GEN337911 1-ARKANSAS NUCLEAR ONE UNIT #2'
12WP	00NR	2	'FROM->TO'	G11_050	'CIMARRON - DRAPER LAKE 345KV CKT 1'	717	0.051	110.95	'GEN515042 1-SEMINOLE 3G'
12WP	00NR	2	'FROM->TO'	G11_050	'CIMARRON - DRAPER LAKE 345KV CKT 1'	717	0.051	110.70	'GEN335831 1-RIVERBEND UNIT#1'
12WP	00NR	2	'FROM->TO'	G11_050	'CIMARRON - DRAPER LAKE 345KV CKT 1'	717	0.051	109.97	'GEN501801 1-DOLET HILLS UNIT1'
12WP	00NR	2	'FROM->TO'	G11_050	'CIMARRON - DRAPER LAKE 345KV CKT 1'	717	0.051	109.97	'GEN515041 1-SEMINOLE 2G'
12WP	00NR	2	'FROM->TO'	G11_050	'CIMARRON - DRAPER LAKE 345KV CKT 1'	717	0.051	109.77	'GEN337910 1-ARKANSAS NUCLEAR ONE UNIT #1'
12WP	00NR	2	'FROM->TO'	G11_050	'CIMARRON - DRAPER LAKE 345KV CKT 1'	717	0.051	109.35	'GEN520947 1-HUGO1'
12WP	00NR	2	'FROM->TO'	G11_050	'CIMARRON - DRAPER LAKE 345KV CKT 1'	717	0.051	108.70	'GEN337652 1-WHITE BLUFF UNIT #1'
12WP	00NR	2	'FROM->TO'	G11_050	'CIMARRON - DRAPER LAKE 345KV CKT 1'	717	0.051	108.46	'GEN509403 1-PIRKEY GENERATION'
12WP	00NR	2	'FROM->TO'	G11_050	'CIMARRON - DRAPER LAKE 345KV CKT 1'	717	0.051	108.45	'GEN509416 1-TURK GENERATION'
12WP	00NR	2	'FROM->TO'	G11_050	'CIMARRON - DRAPER LAKE 345KV CKT 1'	717	0.051	108.30	'GEN336252 1-NINEMILE POINT UNIT#5'
12WP	00NR	2	'FROM->TO'	G11_050	'CIMARRON - DRAPER LAKE 345KV CKT 1'	717	0.051	108.28	'GEN515040 1-SEMINOLE 1G'
12WP	00NR	2	'FROM->TO'	G11_050	'CIMARRON - DRAPER LAKE 345KV CKT 1'	717	0.051	108.21	'GEN501813 1-RODEMACHER UNIT 3'
12WP	00NR	2	'FROM->TO'	G11_050	'CIMARRON - DRAPER LAKE 345KV CKT 1'	717	0.051	108.20	'GEN336251 1-NINEMILE POINT UNIT#4'
12WP	00NR	2	'FROM->TO'	G11_050	'CIMARRON - DRAPER LAKE 345KV CKT 1'	717	0.051	108.20	'GEN338146 1-INDEPENDENCE UNIT #2'
12WP	00NR	2	'FROM->TO'	G11_050	'CIMARRON - DRAPER LAKE 345KV CKT 1'	717	0.051	108.09	'GEN337041 1-GERALD ANDRUS'
12WP	00NR	2	'FROM->TO'	G11_050	'CIMARRON - DRAPER LAKE 345KV CKT 1'	717	0.051	108.07	'GEN337653 1-WHITE BLUFF UNIT #2'
12WP	00NR	2	'FROM->TO'	G11_050	'CIMARRON - DRAPER LAKE 345KV CKT 1'	717	0.051	108.07	'GEN338143 1-INDEPENDENCE UNIT #1'
12WP	00NR	2	'FROM->TO'	G11_050	'CIMARRON - DRAPER LAKE 345KV CKT 1'	717	0.051	107.57	'GEN501812 1-RODEMACHER UNIT 2'
12WP	00NR	2	'FROM->TO'	G11_050	'CIMARRON - DRAPER LAKE 345KV CKT 1'	717	0.051	107.51	'GEN509406 1-WELSH #3'
12WP	00NR	2	'FROM->TO'	G11_050	'CIMARRON - DRAPER LAKE 345KV CKT 1'	717	0.051	107.51	'GEN509405 1-WELSH #2'
12WP	00NR	2	'FROM->TO'	G11_050	'CIMARRON - DRAPER LAKE 345KV CKT 1'	717	0.051	107.51	'GEN509404 1-WELSH #1'
12WP	00NR	2	'FROM->TO'	G11_050	'CIMARRON - DRAPER LAKE 345KV CKT 1'	717	0.051	107.43	'GEN335206 1-NELSON UNIT 6'
12WP	00NR	2	'FROM->TO'	G11_050	'CIMARRON - DRAPER LAKE 345KV CKT 1'	717	0.051	107.22	'GEN336831 1-BAXTER WILSON SES'
12WP	00NR	2	'FROM->TO'	G11_050	'CIMARRON - DRAPER LAKE 345KV CKT 1'	717	0.051	107.18	'GEN334440 1-SABINE UNIT 4'
12WP	00NR	2	'FROM->TO'	G11_050	'CIMARRON - DRAPER LAKE 345KV CKT 1'	717	0.051	107.15	'GEN515226 1-MUSKOGEE 6G'
12WP	00NR	2	'FROM->TO'	G11_050	'CIMARRON - DRAPER LAKE 345KV CKT 1'	717	0.051	106.99	'GEN338388 1-1PLUMPT 23.000'
13WP	00NR	2	'FROM->TO'	G11_050	'CIMARRON - DRAPER LAKE 345KV CKT 1'	717	0.051	106.98	'LONGWOOD - WILKES 345KV CKT 1'
12WP	00NR	2	'FROM->TO'	G11_050	'CIMARRON - DRAPER LAKE 345KV CKT 1'	717	0.051	106.75	'GEN515223 1-MUSKOGEE 4G'
12WP	00NR	2	'FROM->TO'	G11_050	'CIMARRON - DRAPER LAKE 345KV CKT 1'	717	0.051	106.75	'GEN515225 1-MUSKOGEE 5G'
12WP	00NR	2	'FROM->TO'	G11_050	'CIMARRON - DRAPER LAKE 345KV CKT 1'	717	0.051	106.71	'GEN335204 1-NELSON UNIT 4'
12WP	00NR	2	'FROM->TO'	G11_050	'CIMARRON - DRAPER LAKE 345KV CKT 1'	717	0.051	106.66	'GEN336801 1-BAXTER WILSON UNIT #1'

SEASON	GROUP	SCENARIO	DIRECTION	SOURCE	MONITORED ELEMENT	RATE B (MVA)	TDF	(%MVA) LOADING	CONTINGENCY
12WP	00NR	2	'FROM->TO'	G11_050	'CIMARRON - DRAPER LAKE 345KV CKT 1'	717	0.051	106.63	'GEN334433 1-SABINE UNIT 3'
12WP	00NR	2	'FROM->TO'	G11_050	'CIMARRON - DRAPER LAKE 345KV CKT 1'	717	0.051	106.63	'GEN334441 1-SABINE UNIT 5'
12WP	00NR	2	'FROM->TO'	G11_050	'CIMARRON - DRAPER LAKE 345KV CKT 1'	717	0.051	105.44	'GEN336170 1-GULF OXY U4'
12WP	00NR	2	'FROM->TO'	G11_050	'CIMARRON - DRAPER LAKE 345KV CKT 1'	717	0.051	105.25	'GEN334070 1-LEWIS CREEK 1'
12WP	00NR	2	'FROM->TO'	G11_050	'CIMARRON - DRAPER LAKE 345KV CKT 1'	717	0.051	105.21	'GEN334071 1-LEWIS CREEK 2'
12WP	00NR	2	'FROM->TO'	G11_050	'CIMARRON - DRAPER LAKE 345KV CKT 1'	717	0.051	105.11	'GEN300006 1-NEW MADRID UNIT 1'
12WP	00NR	2	'FROM->TO'	G11_050	'CIMARRON - DRAPER LAKE 345KV CKT 1'	717	0.051	105.09	'GEN300007 1-NEW MADRID UNIT 2'
12WP	00NR	2	'FROM->TO'	G11_050	'CIMARRON - DRAPER LAKE 345KV CKT 1'	717	0.051	105.05	'GEN509394 1-FLINT CREEK'
12WP	00NR	2	'FROM->TO'	G11_050	'CIMARRON - DRAPER LAKE 345KV CKT 1'	717	0.051	104.92	'GEN512688 2-GRDA1 GSU2 22'
12WP	00NR	2	'FROM->TO'	G11_050	'CIMARRON - DRAPER LAKE 345KV CKT 1'	717	0.051	104.88	'GEN334432 1-SABINE UNIT 2'
12WP	00NR	2	'FROM->TO'	G11_050	'CIMARRON - DRAPER LAKE 345KV CKT 1'	717	0.051	104.88	'GEN334431 1-SABINE UNIT 1'
12WP	00NR	2	'FROM->TO'	G11_050	'CIMARRON - DRAPER LAKE 345KV CKT 1'	717	0.051	104.86	'GEN334030 1-FRONTIER UNIT 1'
12WP	00NR	2	'FROM->TO'	G11_050	'CIMARRON - DRAPER LAKE 345KV CKT 1'	717	0.051	104.86	'GEN334031 1-FRONTIER UNIT 2'
12WP	00NR	2	'FROM->TO'	G11_050	'CIMARRON - DRAPER LAKE 345KV CKT 1'	717	0.051	104.84	'GEN509393 S1-ARSENAL HILL GENS #4 (STALL)'
12WP	00NR	2	'FROM->TO'	G11_050	'CIMARRON - DRAPER LAKE 345KV CKT 1'	717	0.051	104.80	'GEN335612 1-WILLOW GLENN UNIT#2'
12WP	00NR	2	'FROM->TO'	G11_050	'CIMARRON - DRAPER LAKE 345KV CKT 1'	717	0.051	104.70	'GEN512689 1-GRDA1 GSU1 22'
12WP	00NR	2	'FROM->TO'	G11_050	'CIMARRON - DRAPER LAKE 345KV CKT 1'	717	0.051	104.70	'GEN509391 G1-ARSENAL HILL GENS #2 (STALL)'
12WP	00NR	2	'FROM->TO'	G11_050	'CIMARRON - DRAPER LAKE 345KV CKT 1'	717	0.051	104.70	'GEN509392 G2-ARSENAL HILL GENS #3 (STALL)'
12WP	00NR	2	'FROM->TO'	G11_050	'CIMARRON - DRAPER LAKE 345KV CKT 1'	717	0.051	104.58	'GEN503909 1-FULTONU1 1 16.000'
12WP	00NR	2	'FROM->TO'	G11_050	'CIMARRON - DRAPER LAKE 345KV CKT 1'	717	0.051	104.56	'GEN337428 1-PERYVILLE UNIT #1'
12WP	00NR	2	'FROM->TO'	G11_050	'CIMARRON - DRAPER LAKE 345KV CKT 1'	717	0.051	104.56	'GEN337430 1-PERYVILLE UNIT #3'
12WP	00NR	2	'FROM->TO'	G11_050	'CIMARRON - DRAPER LAKE 345KV CKT 1'	717	0.051	104.52	'GEN337429 1-PERYVILLE UNIT #2'
12WP	00NR	2	'FROM->TO'	G11_050	'CIMARRON - DRAPER LAKE 345KV CKT 1'	717	0.051	104.52	'GEN337432 1-PERYVILLE UNIT #5'
12WP	00NR	2	'FROM->TO'	G11_050	'CIMARRON - DRAPER LAKE 345KV CKT 1'	717	0.051	104.49	'GEN511840 1-NORTHEASTERN STATION #3'
12WP	00NR	2	'FROM->TO'	G11_050	'CIMARRON - DRAPER LAKE 345KV CKT 1'	717	0.051	104.48	'GEN511839 1-NORTHEASTERN STATION #2'
12WP	00NR	2	'FROM->TO'	G11_050	'CIMARRON - DRAPER LAKE 345KV CKT 1'	717	0.051	104.47	'GEN506752 1-LEBROCK GAS 1'
12WP	00NR	2	'FROM->TO'	G11_050	'CIMARRON - DRAPER LAKE 345KV CKT 1'	717	0.051	104.46	'GEN511841 1-NORTHEASTERN STATION #4'
12WP	00NR	2	'FROM->TO'	G11_050	'CIMARRON - DRAPER LAKE 345KV CKT 1'	717	0.051	104.44	'GEN335075 1-DYNEGY#1'
12WP	00NR	2	'FROM->TO'	G11_050	'CIMARRON - DRAPER LAKE 345KV CKT 1'	717	0.051	104.43	'GEN318007 1-5MOROW161 161.00'
12WP	00NR	2	'FROM->TO'	G11_050	'CIMARRON - DRAPER LAKE 345KV CKT 1'	717	0.051	104.43	'GEN336167 1-GULF OXY U1'
12WP	00NR	2	'FROM->TO'	G11_050	'CIMARRON - DRAPER LAKE 345KV CKT 1'	717	0.051	104.43	'GEN336168 1-GULF OXY U2'
12WP	00NR	2	'FROM->TO'	G11_050	'CIMARRON - DRAPER LAKE 345KV CKT 1'	717	0.051	104.43	'GEN336169 1-GULF OXY U3'
12WP	00NR	2	'FROM->TO'	G11_050	'CIMARRON - DRAPER LAKE 345KV CKT 1'	717	0.051	104.41	'GEN335203 1-NELSON UNIT 3'
12WP	00NR	2	'FROM->TO'	G11_050	'CIMARRON - DRAPER LAKE 345KV CKT 1'	717	0.051	104.36	'GEN334392 1-EXXON MOBIL IPP 1'
12WP	00NR	2	'FROM->TO'	G11_050	'CIMARRON - DRAPER LAKE 345KV CKT 1'	717	0.051	104.30	'GEN337006 1-DUKE MCADAMS G1'
12WP	00NR	2	'FROM->TO'	G11_050	'CIMARRON - DRAPER LAKE 345KV CKT 1'	717	0.051	104.30	'GEN337007 1-DUKE MCADAMS G2'
12WP	00NR	2	'FROM->TO'	G11_050	'CIMARRON - DRAPER LAKE 345KV CKT 1'	717	0.051	104.28	'GEN505432 1-SIKESTON'
12WP	00NR	2	'FROM->TO'	G11_050	'CIMARRON - DRAPER LAKE 345KV CKT 1'	717	0.051	104.28	'GEN337008 1-DUKE MCADAMS S1'
12WP	00NR	2	'FROM->TO'	G11_050	'CIMARRON - DRAPER LAKE 345KV CKT 1'	717	0.051	104.22	'GEN338500 1-MCCLELLAN UNIT #1'
12WP	00NR	2	'FROM->TO'	G11_050	'CIMARRON - DRAPER LAKE 345KV CKT 1'	717	0.051	104.15	'GEN515266 1-AES 1G'
12WP	00NR	2	'FROM->TO'	G11_050	'CIMARRON - DRAPER LAKE 345KV CKT 1'	717	0.051	104.15	'GEN515267 1-AES 2G'
12WP	00NR	2	'FROM->TO'	G11_050	'CIMARRON - DRAPER LAKE 345KV CKT 1'	717	0.051	104.11	'GEN337954 1-LYNCH UNIT #3'
12WP	00NR	2	'FROM->TO'	G11_050	'CIMARRON - DRAPER LAKE 345KV CKT 1'	717	0.051	104.11	'GEN511938 1-OEC STEAM # 1'
12WP	00NR	2	'FROM->TO'	G11_050	'CIMARRON - DRAPER LAKE 345KV CKT 1'	717	0.051	104.09	'GEN335611 1-WILLOW GLENN UNIT#1'
12WP	00NR	2	'FROM->TO'	G11_050	'CIMARRON - DRAPER LAKE 345KV CKT 1'	717	0.051	104.06	'GEN335201 1-NELSON UNIT 1'
12WP	00NR	2	'FROM->TO'	G11_050	'CIMARRON - DRAPER LAKE 345KV CKT 1'	717	0.051	104.05	'GEN335202 1-NELSON UNIT 2'
12WP	00NR	2	'FROM->TO'	G11_050	'CIMARRON - DRAPER LAKE 345KV CKT 1'	717	0.051	104.02	'GEN336944 1-REX BROWN'
12WP	00NR	2	'FROM->TO'	G11_050	'CIMARRON - DRAPER LAKE 345KV CKT 1'	717	0.051	104.01	'GEN334456 1-CONOCO UNIT#1'
12WP	00NR	2	'FROM->TO'	G11_050	'CIMARRON - DRAPER LAKE 345KV CKT 1'	717	0.051	103.99	'GEN506749 1-EASTMAN GENERATION A'
12WP	00NR	2	'FROM->TO'	G11_050	'CIMARRON - DRAPER LAKE 345KV CKT 1'	717	0.051	103.93	'GEN338510 1-1S1KNWRI'
12WP	00NR	2	'FROM->TO'	G11_050	'CIMARRON - DRAPER LAKE 345KV CKT 1'	717	0.051	103.93	'GEN338511 1-1C7KNWRI'
12WP	00NR	2	'FROM->TO'	G11_050	'CIMARRON - DRAPER LAKE 345KV CKT 1'	717	0.051	103.92	'GEN335137 C4-PPG'
12WP	00NR	2	'FROM->TO'	G11_050	'CIMARRON - DRAPER LAKE 345KV CKT 1'	717	0.051	103.92	'GEN338513 1-BAILEY UNIT #1'
12WP	00NR	2	'FROM->TO'	G11_050	'CIMARRON - DRAPER LAKE 345KV CKT 1'	717	0.051	103.87	'GEN300003 1-THOMAS HILL UNIT 3'
12WP	00NR	2	'FROM->TO'	G11_050	'CIMARRON - DRAPER LAKE 345KV CKT 1'	717	0.051	103.84	'GEN500915 3-WESTERN KRAFT'
12WP	00NR	2	'FROM->TO'	G11_050	'CIMARRON - DRAPER LAKE 345KV CKT 1'	717	0.051	103.84	'GEN300016 1-1G1GPDEL 18.000'
12WP	00NR	2	'FROM->TO'	G11_050	'CIMARRON - DRAPER LAKE 345KV CKT 1'	717	0.051	103.84	'GEN300017 1-1G2GPDEL 18.000'
12WP	00NR	2	'FROM->TO'	G11_050	'CIMARRON - DRAPER LAKE 345KV CKT 1'	717	0.051	103.82	'GEN501910 1-ACADIA UNIT ST1'
12WP	00NR	2	'FROM->TO'	G11_050	'CIMARRON - DRAPER LAKE 345KV CKT 1'	717	0.051	103.81	'GEN334467 1-DUPONT UNIT#1'
12WP	00NR	2	'FROM->TO'	G11_050	'CIMARRON - DRAPER LAKE 345KV CKT 1'	717	0.051	103.81	'GEN334335 1-TOLEDO BEND'
12WP	00NR	2	'FROM->TO'	G11_050	'CIMARRON - DRAPER LAKE 345KV CKT 1'	717	0.051	103.80	'GEN337124 5-LS POWER BATESVILLE'
12WP	00NR	2	'FROM->TO'	G11_050	'CIMARRON - DRAPER LAKE 345KV CKT 1'	717	0.051	103.80	'GEN503900 1-FITZHUGH CT1'
12WP	00NR	2	'FROM->TO'	G11_050	'CIMARRON - DRAPER LAKE 345KV CKT 1'	717	0.051	103.80	'GEN335546 3-DOW COGEN'
12WP	00NR	2	'FROM->TO'	G11_050	'CIMARRON - DRAPER LAKE 345KV CKT 1'	717	0.051	103.78	'GEN318008 3-5MOSEL161 161.00'
12WP	00NR	2	'FROM->TO'	G11_050	'CIMARRON - DRAPER LAKE 345KV CKT 1'	717	0.051	103.77	'GEN549893 2-SOUTHWEST 2'
12WP	00NR	2	'FROM->TO'	G11_050	'CIMARRON - DRAPER LAKE 345KV CKT 1'	717	0.051	103.76	'GEN336176 1-UNION CARBIDE COGEN GT1'
12WP	00NR	2	'FROM->TO'	G11_050	'CIMARRON - DRAPER LAKE 345KV CKT 1'	717	0.051	103.76	'GEN336177 1-UNION CARBIDE COGEN GT2'
12WP	00NR	2	'FROM->TO'	G11_050	'CIMARRON - DRAPER LAKE 345KV CKT 1'	717	0.051	103.73	'A059'
12WP	00NR	2	'FROM->TO'	G11_050	'CIMARRON - DRAPER LAKE 345KV CKT 1'	717	0.051	103.73	'EUREKA SPRIN'
12WP	00NR	2	'FROM->TO'	G11_050	'CIMARRON - DRAPER LAKE 345KV CKT 1'	717	0.051	103.69	'GEN335644 1-EXXON UNIT5'
12WP	00NR	2	'FROM->TO'	G11_050	'CIMARRON - DRAPER LAKE 345KV CKT 1'	717	0.051	103.21	'BASE CASE'
12WP	00NR	2	'FROM->TO'	G11_050	'CIMARRON - DRAPER LAKE 345KV CKT 1'	717	0.051	103.21	'NO5_GEN-NORTH OMAHA 5'
12WP	00NR	2	'FROM->TO'	G11_050	'CIMARRON - DRAPER LAKE 345KV CKT 1'	717	0.051	102.81	'DRAPER LAKE - DRPCAPS4 138.00 138KV CKT 1'
12WP	00NR	2	'FROM->TO'	G11_050	'CIMARRON - DRAPER LAKE 345KV CKT 1'	717	0.051	102.81	'GEN542957 1-IATAN UNIT #1'
12WP	00NR	2	'FROM->TO'	G11_050	'CIMARRON - DRAPER LAKE 345KV CKT 1'	717	0.051	102.80	'GEN542956 2-LACYGNE UNIT #2'
12WP	00NR	2	'FROM->TO'	G11_050	'CIMARRON - DRAPER LAKE 345KV CKT 1'	717	0.051	102.79	'GEN532663 1-LAWRENCE ENERGY CENTER UNIT 5'
12WP	00NR	2	'FROM->TO'	G11_050	'CIMARRON - DRAPER LAKE 345KV CKT 1'	717	0.051	102.77	'GEN542955 1-LACYGNE UNIT #1'
12WP	00NR	2	'FROM->TO'	G11_050	'CIMARRON - DRAPER LAKE 345KV CKT 1'	717	0.051	102.73	'GEN542962 2-IATAN UNIT #2'

SEASON	GROUP	SCENARIO	DIRECTION	SOURCE	MONITORED ELEMENT	RATE B (MVA)	TDF	(%MVA) LOADING	CONTINGENCY
12WP	00NR	2	'FROM->TO'	G11_050	'CIMARRON - DRAPER LAKE 345KV CKT 1'	717	0.051	102.50	'GEN527903 1-HOBBS PLANT #3 (ST)'
12WP	00NR	2	'FROM->TO'	G11_050	'CIMARRON - DRAPER LAKE 345KV CKT 1'	717	0.051	102.43	'GEN523461 1-BLACKHAWK GEN #1'
12WP	00NR	2	'FROM->TO'	G11_050	'CIMARRON - DRAPER LAKE 345KV CKT 1'	717	0.051	102.43	'GEN523462 1-BLACKHAWK GEN #2'
12WP	00NR	2	'FROM->TO'	G11_050	'CIMARRON - DRAPER LAKE 345KV CKT 1'	717	0.051	102.40	'GEN560386 1-G10-029-1 0.6900'
12WP	00NR	2	'FROM->TO'	G11_050	'CIMARRON - DRAPER LAKE 345KV CKT 1'	717	0.051	102.40	'GEN560387 1-G10-029-2 0.6900'
12WP	00NR	2	'FROM->TO'	G11_050	'CIMARRON - DRAPER LAKE 345KV CKT 1'	717	0.051	102.40	'GEN560388 1-G10-029-3 0.6900'
12WP	00NR	2	'FROM->TO'	G11_050	'CIMARRON - DRAPER LAKE 345KV CKT 1'	717	0.051	102.30	'GEN532653 1-JEFFREY ENERGY CENTER UNIT 3'
12WP	00NR	2	'FROM->TO'	G11_050	'CIMARRON - DRAPER LAKE 345KV CKT 1'	717	0.051	102.28	'GEN532651 1-JEFFREY ENERGY CENTER UNIT 1'
12WP	00NR	2	'FROM->TO'	G11_050	'CIMARRON - DRAPER LAKE 345KV CKT 1'	717	0.051	102.26	'GEN532652 1-JEFFREY ENERGY CENTER UNIT 2'
12WP	00NR	2	'FROM->TO'	G11_050	'CIMARRON - DRAPER LAKE 345KV CKT 1'	717	0.051	102.24	'GEN527165 1-Mustang Gen #5'
12WP	00NR	2	'FROM->TO'	G11_050	'CIMARRON - DRAPER LAKE 345KV CKT 1'	717	0.051	102.24	'GEN527164 1-MUSTANG GEN #4 22 KV'
12WP	00NR	2	'FROM->TO'	G11_050	'CIMARRON - DRAPER LAKE 345KV CKT 1'	717	0.051	102.22	'GEN527901 1-HOBBS PLANT #1 (CT)'
12WP	00NR	2	'FROM->TO'	G11_050	'CIMARRON - DRAPER LAKE 345KV CKT 1'	717	0.051	102.21	'GEN527902 1-HOBBS PLANT #2 (CT)'
12WP	00NR	2	'FROM->TO'	G11_050	'CIMARRON - DRAPER LAKE 345KV CKT 1'	717	0.051	102.18	'GEN527163 1-MUSTANG GEN #3 22 KV'
12WP	00NR	2	'FROM->TO'	G11_050	'CIMARRON - DRAPER LAKE 345KV CKT 1'	717	0.051	102.16	'GEN527161 1-MUSTANG GEN #1'
12WP	00NR	2	'FROM->TO'	G11_050	'CIMARRON - DRAPER LAKE 345KV CKT 1'	717	0.051	102.15	'GEN527162 1-MUSTANG GEN #2'
12WP	00NR	2	'FROM->TO'	G11_050	'CIMARRON - DRAPER LAKE 345KV CKT 1'	717	0.051	102.08	'GEN560356 1-G10-53 0.6900'
12WP	00NR	2	'FROM->TO'	G11_050	'CIMARRON - DRAPER LAKE 345KV CKT 1'	717	0.051	102.03	'GEN520997 1-MORLND2'
12WP	00NR	2	'FROM->TO'	G11_050	'CIMARRON - DRAPER LAKE 345KV CKT 1'	717	0.051	102.02	'GEN560329 1-G10-45 0.6900'
12WP	00NR	2	'FROM->TO'	G11_050	'CIMARRON - DRAPER LAKE 345KV CKT 1'	717	0.051	101.96	'GEN520998 1-MORLND3'
12WP	00NR	2	'FROM->TO'	G11_050	'CIMARRON - DRAPER LAKE 345KV CKT 1'	717	0.051	101.84	'GEN514805 1-SOONER UNIT 1'
12WP	00NR	2	'FROM->TO'	G11_050	'CIMARRON - DRAPER LAKE 345KV CKT 1'	717	0.051	101.74	'GEN526333 1-JONES GEN #3 21 KV'
12WP	00NR	2	'FROM->TO'	G11_050	'CIMARRON - DRAPER LAKE 345KV CKT 1'	717	0.051	101.74	'GEN526334 1-JONES_4 116.500'
12WP	00NR	2	'FROM->TO'	G11_050	'CIMARRON - DRAPER LAKE 345KV CKT 1'	717	0.051	101.54	'GEN514806 1-SOONER UNIT 2'
12WP	00NR	2	'FROM->TO'	G11_050	'CIMARRON - DRAPER LAKE 345KV CKT 1'	717	0.051	101.31	'GEN531447 1-HOLCOMB GENERATOR'
12WP	00NR	2	'FROM->TO'	G11_050	'CIMARRON - DRAPER LAKE 345KV CKT 1'	717	0.051	100.78	'GEN523971 1-HARRINGTON GEN #1 24 KV'
12WP	00NR	2	'FROM->TO'	G11_050	'CIMARRON - DRAPER LAKE 345KV CKT 1'	717	0.051	100.69	'GEN523972 1-HARRINGTON GEN #2 24 KV'
12WP	00NR	2	'FROM->TO'	G11_050	'CIMARRON - DRAPER LAKE 345KV CKT 1'	717	0.051	100.68	'GEN523973 1-HARRINGTON GEN #3 24 KV'
12WP	00NR	2	'FROM->TO'	G11_050	'CIMARRON - DRAPER LAKE 345KV CKT 1'	717	0.051	100.29	'GEN560225 1-G10-43 18.000'
12WP	00NR	2	'FROM->TO'	G11_050	'CIMARRON - DRAPER LAKE 345KV CKT 1'	717	0.051	100.05	'GEN532751 1-WOLF CREEK GENERATING STATION UNIT 1'
12WP	00NR	2	'FROM->TO'	G11_050	'CIMARRON - DRAPER LAKE 345KV CKT 1'	717	0.051	104.31	'TULSA NORTH - WEKIWA 345KV CKT 1'
12WP	00NR	2	'FROM->TO'	G11_050	'CIMARRON - DRAPER LAKE 345KV CKT 1'	717	0.051	103.81	'MORISNT4 138.00 - SOONER 138KV CKT 1'
13WP	00NR	2	'FROM->TO'	G11_050	'CIMARRON - DRAPER LAKE 345KV CKT 1'	717	0.051	108.75	'OGE3TERM17'
13WP	00NR	2	'FROM->TO'	G11_050	'CIMARRON - DRAPER LAKE 345KV CKT 1'	717	0.051	107.98	'WOODRING (WOODRNG2) 345/138/13.8KV TRANSFORMER CKT 1'
12WP	00NR	2	'FROM->TO'	G11_050	'CIMARRON - DRAPER LAKE 345KV CKT 1'	717	0.051	102.65	'G11_040_TAP 138.00 - POOLEVILLE 138KV CKT 1'
13WP	00NR	2	'FROM->TO'	G11_050	'CIMARRON - DRAPER LAKE 345KV CKT 1'	717	0.051	108.50	'TULSA NORTH - WEKIWA 345KV CKT 1'
12WP	00NR	2	'FROM->TO'	G11_050	'CIMARRON - DRAPER LAKE 345KV CKT 1'	717	0.051	103.89	'EL RENO - ROMAN NOSE 138KV CKT 1'
12WP	00NR	2	'FROM->TO'	G11_050	'CIMARRON - DRAPER LAKE 345KV CKT 1'	717	0.051	103.85	'ROMAN NOSE - SOUTHARD 138KV CKT 1'
12WP	00NR	2	'FROM->TO'	G11_050	'CIMARRON - DRAPER LAKE 345KV CKT 1'	717	0.051	103.83	'DEWEY - SOUTHARD 138KV CKT 1'
13WP	00NR	2	'FROM->TO'	G11_050	'CIMARRON - DRAPER LAKE 345KV CKT 1'	717	0.051	108.98	'MEMORIAL - SKYLINE 138KV CKT 1'
13WP	00NR	2	'FROM->TO'	G11_050	'CIMARRON - DRAPER LAKE 345KV CKT 1'	717	0.051	106.91	'ARKANSAS NUCLEAR ONE - PLEASANT HILL 500KV CKT 1'
13WP	00NR	2	'FROM->TO'	G11_050	'CIMARRON - DRAPER LAKE 345KV CKT 1'	717	0.051	106.81	'Hitchland Interchange - WOODWARD DISTRICT EHV 345KV CKT 2'
12WP	00NR	2	'FROM->TO'	G11_050	'CIMARRON - DRAPER LAKE 345KV CKT 1'	717	0.051	103.69	'5LOCSTGV - MAID 161KV CKT 1'
12WP	00NR	2	'FROM->TO'	G11_050	'CIMARRON - DRAPER LAKE 345KV CKT 1'	717	0.051	103.68	'5CDRCRST 161.00 - 5LOCSTGV 161KV CKT 1'
12WP	00NR	2	'FROM->TO'	G11_050	'CIMARRON - DRAPER LAKE 345KV CKT 1'	717	0.051	103.74	'WOODRING (WOODRNG2) 345/138/13.8KV TRANSFORMER CKT 1'
13WP	00NR	2	'FROM->TO'	G11_050	'CIMARRON - DRAPER LAKE 345KV CKT 1'	717	0.051	108.52	'LONEOAK - NORTHWEST 138KV CKT 1'
13WP	00NR	2	'FROM->TO'	G11_050	'CIMARRON - DRAPER LAKE 345KV CKT 1'	717	0.051	108.20	'LONEOAK - QUAIL CREEK 138KV CKT 1'
12WP	00NR	2	'FROM->TO'	G11_050	'CIMARRON - DRAPER LAKE 345KV CKT 1'	717	0.051	102.64	'ARKANSAS NUCLEAR ONE - PLEASANT HILL 500KV CKT 1'
12WP	00NR	2	'FROM->TO'	G11_050	'CIMARRON - DRAPER LAKE 345KV CKT 1'	717	0.051	102.57	'Hitchland Interchange - WOODWARD DISTRICT EHV 345KV CKT 2'
13WP	00NR	2	'FROM->TO'	G11_050	'CIMARRON - DRAPER LAKE 345KV CKT 1'	717	0.051	108.05	'CHERRY CREEK - PLEASANT VALLEY 138KV CKT 1'
13WP	00NR	2	'FROM->TO'	G11_050	'CIMARRON - DRAPER LAKE 345KV CKT 1'	717	0.051	107.98	'EL RENO SW - MUSTANG 69KV CKT 1'
13WP	00NR	2	'FROM->TO'	G11_050	'CIMARRON - DRAPER LAKE 345KV CKT 1'	717	0.051	107.92	'BOYD - CHERRY CREEK 138KV CKT 1'
12WP	00NR	2	'FROM->TO'	G11_050	'CIMARRON - DRAPER LAKE 345KV CKT 1'	717	0.051	104.86	'NORTHEAST STATION - ONETA 345KV CKT 1'
12WP	00NR	2	'FROM->TO'	G11_050	'CIMARRON - DRAPER LAKE 345KV CKT 1'	717	0.051	104.80	'MEMORIAL - SKYLINE 138KV CKT 1'
13WP	00NR	2	'FROM->TO'	G11_050	'CIMARRON - DRAPER LAKE 345KV CKT 1'	717	0.051	109.13	'NORTHEAST STATION - ONETA 345KV CKT 1'
13WP	00NR	2	'FROM->TO'	G11_050	'CIMARRON - DRAPER LAKE 345KV CKT 1'	717	0.051	108.17	'ANADARKO - GEORGIA 138KV CKT 1'
13WP	00NR	2	'FROM->TO'	G11_050	'CIMARRON - DRAPER LAKE 345KV CKT 1'	717	0.051	108.13	'FLETCHER - GEORGIA 138KV CKT 1'
12WP	00NR	2	'FROM->TO'	G11_050	'CIMARRON - DRAPER LAKE 345KV CKT 1'	717	0.051	104.31	'LONEOAK - NORTHWEST 138KV CKT 1'
12WP	00NR	2	'FROM->TO'	G11_050	'CIMARRON - DRAPER LAKE 345KV CKT 1'	717	0.051	103.99	'LONEOAK - QUAIL CREEK 138KV CKT 1'
12WP	00NR	2	'FROM->TO'	G11_050	'CIMARRON - DRAPER LAKE 345KV CKT 1'	717	0.051	103.73	'EL RENO SW - MUSTANG 69KV CKT 1'
12WP	00NR	2	'FROM->TO'	G11_050	'CIMARRON - DRAPER LAKE 345KV CKT 1'	717	0.051	103.66	'CHERRY CREEK - PLEASANT VALLEY 138KV CKT 1'
13WP	00NR	2	'FROM->TO'	G11_050	'CIMARRON - DRAPER LAKE 345KV CKT 1'	717	0.051	108.16	'MARSHALL - WOODRING 138KV CKT 1'
13WP	00NR	2	'FROM->TO'	G11_050	'CIMARRON - DRAPER LAKE 345KV CKT 1'	717	0.051	108.15	'COTTONWOOD CREEK - MARSHALL 138KV CKT 1'
12WP	00NR	2	'FROM->TO'	G11_050	'CIMARRON - DRAPER LAKE 345KV CKT 1'	717	0.051	103.80	'ARCADIA (ARCADIA3) 345/138/13.8KV TRANSFORMER CKT 1'
12WP	00NR	2	'FROM->TO'	G11_050	'CIMARRON - DRAPER LAKE 345KV CKT 1'	717	0.051	103.93	'ANADARKO - GEORGIA 138KV CKT 1'
12WP	00NR	2	'FROM->TO'	G11_050	'CIMARRON - DRAPER LAKE 345KV CKT 1'	717	0.051	103.88	'FLETCHER - GEORGIA 138KV CKT 1'
12WP	00NR	2	'FROM->TO'	G11_050	'CIMARRON - DRAPER LAKE 345KV CKT 1'	717	0.051	103.86	'ARCADIA (ARCADIA2) 345/138/13.8KV TRANSFORMER CKT 1'
13WP	00NR	2	'FROM->TO'	G11_050	'CIMARRON - DRAPER LAKE 345KV CKT 1'	717	0.051	108.29	'KETCH - KETCH TAP 138KV CKT 1'
13WP	00NR	2	'FROM->TO'	G11_050	'CIMARRON - DRAPER LAKE 345KV CKT 1'	717	0.051	108.23	'ELK CITY 230KV - SWEETWATER 230KV CKT 1'
13WP	00NR	2	'FROM->TO'	G11_050	'CIMARRON - DRAPER LAKE 345KV CKT 1'	717	0.051	108.23	'ELK CITY 230KV (ELKCTY-6) 230/138/13.8KV TRANSFORMER CKT 1'
13WP	00NR	2	'FROM->TO'	G11_050	'CIMARRON - DRAPER LAKE 345KV CKT 1'	717	0.051	107.91	'DALE - HORSESHOE LAKE 138KV CKT 1'
12WP	00NR	2	'FROM->TO'	G11_050	'CIMARRON - DRAPER LAKE 345KV CKT 1'	717	0.051	103.98	'MARSHALL - WOODRING 138KV CKT 1'
12WP	00NR	2	'FROM->TO'	G11_050	'CIMARRON - DRAPER LAKE 345KV CKT 1'	717	0.051	103.97	'COTTONWOOD CREEK - MARSHALL 138KV CKT 1'
13WP	00NR	2	'FROM->TO'	G11_050	'CIMARRON - DRAPER LAKE 345KV CKT 1'	717	0.051	105.07	'CHAMBER SPRINGS - CLARKSVILLE 345KV CKT 1'
12WP	00NR	2	'FROM->TO'	G11_050	'CIMARRON - DRAPER LAKE 345KV CKT 1'	717	0.051	100.95	'CHAMBER SPRINGS - CLARKSVILLE 345KV CKT 1'
12WP	00NR	2	'FROM->TO'	G11_050	'CIMARRON - DRAPER LAKE 345KV CKT 1'	717	0.051	104.09	'KETCH - KETCH TAP 138KV CKT 1'
12WP	00NR	2	'FROM->TO'	G11_050	'CIMARRON - DRAPER LAKE 345KV CKT 1'	717	0.051	104.07	'ELK CITY 230KV - SWEETWATER 230KV CKT 1'
12WP	00NR	2	'FROM->TO'	G11_050	'CIMARRON - DRAPER LAKE 345KV CKT 1'	717	0.051	104.07	'ELK CITY 230KV (ELKCTY-6) 230/138/13.8KV TRANSFORMER CKT 1'

SEASON	GROUP	SCENARIO	DIRECTION	SOURCE	MONITORED ELEMENT	RATE B (MVA)	TDF	(%MVA) LOADING	CONTINGENCY
12WP	00NR	2	'FROM->TO'	G11_050	'CIMARRON - DRAPER LAKE 345KV CKT 1'	717	0.051	103.96	'GRAPEVINE INTERCHANGE - STATELINE INTERCHANGE 230KV CKT 1'
12WP	00NR	2	'FROM->TO'	G11_050	'CIMARRON - DRAPER LAKE 345KV CKT 1'	717	0.051	103.89	'SPP-SWPS-02'
13WP	00NR	2	'FROM->TO'	G11_050	'CIMARRON - DRAPER LAKE 345KV CKT 1'	717	0.051	106.50	'BORDER 7345.00 - WOODWARD DISTRICT EHV 345KV CKT 1'
13WP	00NR	2	'FROM->TO'	G11_050	'CIMARRON - DRAPER LAKE 345KV CKT 1'	717	0.051	108.00	'EMPIRE - FLETCHER 138KV CKT 1'
13WP	00NR	2	'FROM->TO'	G11_050	'CIMARRON - DRAPER LAKE 345KV CKT 1'	717	0.051	107.93	'COMANCHE - EMPIRE 138KV CKT 1'
12WP	00NR	2	'FROM->TO'	G11_050	'CIMARRON - DRAPER LAKE 345KV CKT 1'	717	0.051	103.99	'SPP-SWPS-03'
12WP	00NR	2	'FROM->TO'	G11_050	'CIMARRON - DRAPER LAKE 345KV CKT 1'	717	0.051	102.46	'BORDER 7345.00 - WOODWARD DISTRICT EHV 345KV CKT 1'
13WP	00NR	2	'FROM->TO'	G11_050	'CIMARRON - DRAPER LAKE 345KV CKT 1'	717	0.051	106.97	'MUSKOGEE - PECAN CREEK 345KV CKT 2'
12WP	00NR	2	'FROM->TO'	G11_050	'CIMARRON - DRAPER LAKE 345KV CKT 1'	717	0.051	103.75	'EMPIRE - FLETCHER 138KV CKT 1'
12WP	00NR	2	'FROM->TO'	G11_050	'CIMARRON - DRAPER LAKE 345KV CKT 1'	717	0.051	103.69	'COMANCHE - EMPIRE 138KV CKT 1'
13WP	00NR	2	'FROM->TO'	G11_050	'CIMARRON - DRAPER LAKE 345KV CKT 1'	717	0.051	109.44	'ARCADIA - KAMO MEMORIAL 138KV CKT 1'
13WP	00NR	2	'FROM->TO'	G11_050	'CIMARRON - DRAPER LAKE 345KV CKT 1'	717	0.051	106.78	'WELSH - WILKES 345KV CKT 1'
13WP	00NR	2	'FROM->TO'	G11_050	'CIMARRON - DRAPER LAKE 345KV CKT 1'	717	0.051	106.90	'WESTMOORE - WILROGR4 138KV CKT 1'
12WP	00NR	2	'FROM->TO'	G11_050	'CIMARRON - DRAPER LAKE 345KV CKT 1'	717	0.051	105.09	'ARCADIA - KAMO MEMORIAL 138KV CKT 1'
13WP	00NR	2	'FROM->TO'	G11_050	'CIMARRON - DRAPER LAKE 345KV CKT 1'	717	0.051	108.36	'DIVISION AVE - MUSTANG 138KV CKT 1'
12WP	00NR	2	'FROM->TO'	G11_050	'CIMARRON - DRAPER LAKE 345KV CKT 1'	717	0.051	102.66	'MUSKOGEE - PECAN CREEK 345KV CKT 2'
13WP	00NR	2	'FROM->TO'	G11_050	'CIMARRON - DRAPER LAKE 345KV CKT 1'	717	0.051	109.52	'OGE3TERM14'
12WP	00NR	2	'FROM->TO'	G11_050	'CIMARRON - DRAPER LAKE 345KV CKT 1'	717	0.051	102.47	'WELSH - WILKES 345KV CKT 1'
13WP	00NR	2	'FROM->TO'	G11_050	'CIMARRON - DRAPER LAKE 345KV CKT 1'	717	0.051	108.40	'NORTHWEST - PANTHER 138KV CKT 1'
13WP	00NR	2	'FROM->TO'	G11_050	'CIMARRON - DRAPER LAKE 345KV CKT 1'	717	0.051	108.38	'ARCADIA - OMPA-EDMOND GARBER(LAKE) 138KV CKT 1'
13WP	00NR	2	'FROM->TO'	G11_050	'CIMARRON - DRAPER LAKE 345KV CKT 1'	717	0.051	108.36	'PANTHER - SILVER LAKE 138KV CKT 1'
13WP	00NR	2	'FROM->TO'	G11_050	'CIMARRON - DRAPER LAKE 345KV CKT 1'	717	0.051	108.31	'CHITWOOD - OMPA-EDMOND GARBER(LAKE) 138KV CKT 1'
13WP	00NR	2	'FROM->TO'	G11_050	'CIMARRON - DRAPER LAKE 345KV CKT 1'	717	0.051	108.29	'CHITWOOD - JONES TAP 138KV CKT 1'
12WP	00NR	2	'FROM->TO'	G11_050	'CIMARRON - DRAPER LAKE 345KV CKT 1'	717	0.051	104.06	'ARCADIA - OMPA-EDMOND GARBER(LAKE) 138KV CKT 1'
12WP	00NR	2	'FROM->TO'	G11_050	'CIMARRON - DRAPER LAKE 345KV CKT 1'	717	0.051	104.00	'CHITWOOD - OMPA-EDMOND GARBER(LAKE) 138KV CKT 1'
12WP	00NR	2	'FROM->TO'	G11_050	'CIMARRON - DRAPER LAKE 345KV CKT 1'	717	0.051	103.97	'CHITWOOD - JONES TAP 138KV CKT 1'
12WP	00NR	2	'FROM->TO'	G11_050	'CIMARRON - DRAPER LAKE 345KV CKT 1'	717	0.051	104.16	'DIVISION AVE - MUSTANG 138KV CKT 1'
17WP	00NR	2	'FROM->TO'	G11_050	'CIMARRON - DRAPER LAKE 345KV CKT 1'	717	0.051	101.72	'CIMARRON - SARA 138KV CKT 1'
17WP	00NR	2	'FROM->TO'	G11_050	'CIMARRON - DRAPER LAKE 345KV CKT 1'	717	0.051	100.37	'MCCLAIN - SARA 138KV CKT 1'
12WP	00NR	2	'FROM->TO'	G11_050	'CIMARRON - DRAPER LAKE 345KV CKT 1'	717	0.051	104.18	'NORTHWEST - PANTHER 138KV CKT 1'
12WP	00NR	2	'FROM->TO'	G11_050	'CIMARRON - DRAPER LAKE 345KV CKT 1'	717	0.051	104.15	'PANTHER - SILVER LAKE 138KV CKT 1'
13WP	00NR	2	'FROM->TO'	G11_050	'CIMARRON - DRAPER LAKE 345KV CKT 1'	717	0.051	108.56	'OGE3TERM20'
13WP	00NR	2	'FROM->TO'	G11_050	'CIMARRON - DRAPER LAKE 345KV CKT 1'	717	0.051	110.32	'NORTHWEST (NORTWST3) 345/138/13.8KV TRANSFORMER CKT 1'
13WP	00NR	2	'FROM->TO'	G11_050	'CIMARRON - DRAPER LAKE 345KV CKT 1'	717	0.051	111.09	'NORTHWEST (NORTWST2) 345/138/13.8KV TRANSFORMER CKT 1'
13WP	00NR	2	'FROM->TO'	G11_050	'CIMARRON - DRAPER LAKE 345KV CKT 1'	717	0.051	107.01	'HIGHLAND - PINK SW 138KV CKT 1'
12WP	00NR	2	'FROM->TO'	G11_050	'CIMARRON - DRAPER LAKE 345KV CKT 1'	717	0.051	106.23	'NORTHWEST (NORTWST3) 345/138/13.8KV TRANSFORMER CKT 1'
12WP	00NR	2	'FROM->TO'	G11_050	'CIMARRON - DRAPER LAKE 345KV CKT 1'	717	0.051	102.70	'HIGHLAND - PINK SW 138KV CKT 1'
13WP	00NR	2	'FROM->TO'	G11_050	'CIMARRON - DRAPER LAKE 345KV CKT 1'	717	0.051	108.03	'CLINTON AIR FORCE BASE TAP - ELK CITY 138KV CKT 1'
13WP	00NR	2	'FROM->TO'	G11_050	'CIMARRON - DRAPER LAKE 345KV CKT 1'	717	0.051	108.02	'CLINTON AIR FORCE BASE TAP - HOBART JUNCTION 138KV CKT 1'
12WP	00NR	2	'FROM->TO'	G11_050	'CIMARRON - DRAPER LAKE 345KV CKT 1'	717	0.051	107.02	'NORTHWEST (NORTWST2) 345/138/13.8KV TRANSFORMER CKT 1'
12WP	00NR	2	'FROM->TO'	G11_050	'CIMARRON - DRAPER LAKE 345KV CKT 1'	717	0.051	103.81	'CLINTON AIR FORCE BASE TAP - ELK CITY 138KV CKT 1'
12WP	00NR	2	'FROM->TO'	G11_050	'CIMARRON - DRAPER LAKE 345KV CKT 1'	717	0.051	103.80	'CLINTON AIR FORCE BASE TAP - HOBART JUNCTION 138KV CKT 1'
17WP	00NR	2	'FROM->TO'	G11_050	'CIMARRON - DRAPER LAKE 345KV CKT 1'	717	0.051	101.16	'CANEYRV7 345.00 - NEOSHO 345KV CKT 1'
17WP	00NR	2	'FROM->TO'	G11_050	'CIMARRON - DRAPER LAKE 345KV CKT 1'	717	0.051	101.01	'CANEYRV7 345.00 - LATHAMS7 345.00 345KV CKT 1'
17WP	00NR	2	'FROM->TO'	G11_050	'CIMARRON - DRAPER LAKE 345KV CKT 1'	717	0.051	100.52	'LATHAMS7 345.00 - ROSE HILL 345KV CKT 1'
12WP	00NR	2	'FROM->TO'	G11_050	'CIMARRON - DRAPER LAKE 345KV CKT 1'	717	0.051	102.75	'FOREST HILL - SQUIRL CREEK 138KV CKT 1'
13WP	00NR	2	'FROM->TO'	G11_050	'CIMARRON - DRAPER LAKE 345KV CKT 1'	717	0.050	109.12	'HORSESHOE LAKE - KAMO MEMORIAL 138KV CKT 1'
12WP	00NR	2	'FROM->TO'	G11_050	'CIMARRON - DRAPER LAKE 345KV CKT 1'	717	0.050	104.73	'HORSESHOE LAKE - KAMO MEMORIAL 138KV CKT 1'
13WP	00NR	2	'FROM->TO'	G11_050	'CIMARRON - DRAPER LAKE 345KV CKT 1'	717	0.050	106.64	'SPP-AEPW-04'
13WP	00NR	2	'FROM->TO'	G11_050	'CIMARRON - DRAPER LAKE 345KV CKT 1'	717	0.050	106.81	'FOREST HILL - MAUD 138KV CKT 1'
12WP	00NR	2	'FROM->TO'	G11_050	'CIMARRON - DRAPER LAKE 345KV CKT 1'	717	0.050	102.38	'FOREST HILL - MAUD 138KV CKT 1'
13WP	00NR	2	'FROM->TO'	G11_050	'CIMARRON - DRAPER LAKE 345KV CKT 1'	717	0.050	106.92	'DISCVRY - FOSTER 138KV CKT 1'
13WP	00NR	2	'FROM->TO'	G11_050	'CIMARRON - DRAPER LAKE 345KV CKT 1'	717	0.050	106.75	'DISCVRY - OAKCREEK 138KV CKT 1'
12WP	00NR	2	'FROM->TO'	G11_050	'CIMARRON - DRAPER LAKE 345KV CKT 1'	717	0.050	102.74	'DISCVRY - FOSTER 138KV CKT 1'
12WP	00NR	2	'FROM->TO'	G11_050	'CIMARRON - DRAPER LAKE 345KV CKT 1'	717	0.050	102.57	'DISCVRY - OAKCREEK 138KV CKT 1'
17WP	00NR	2	'FROM->TO'	G11_050	'CIMARRON - DRAPER LAKE 345KV CKT 1'	717	0.050	106.61	'MATTHEWSON 345.00 - NORTHWEST 345KV CKT 1'
12WP	00NR	2	'FROM->TO'	G11_050	'CIMARRON - DRAPER LAKE 345KV CKT 1'	717	0.050	100.51	'BARNES 4 138.00 - DRAPER LAKE 138KV CKT 1'
13WP	00NR	2	'FROM->TO'	G11_050	'CIMARRON - DRAPER LAKE 345KV CKT 1'	717	0.050	104.98	'OGE3TERM23'
13WP	00NR	2	'FROM->TO'	G11_050	'CIMARRON - DRAPER LAKE 345KV CKT 1'	717	0.050	104.98	'BARNES 4 138.00 - DRAPER LAKE 138KV CKT 1'
13WP	00NR	2	'FROM->TO'	G11_050	'CIMARRON - DRAPER LAKE 345KV CKT 1'	717	0.050	106.71	'FIXICO TAP - MAUD 138KV CKT 1'
12WP	00NR	2	'FROM->TO'	G11_050	'CIMARRON - DRAPER LAKE 345KV CKT 1'	717	0.050	102.30	'FIXICO TAP - MAUD 138KV CKT 1'
13WP	00NR	2	'FROM->TO'	G11_050	'CIMARRON - DRAPER LAKE 345KV CKT 1'	717	0.050	105.78	'FT SMITH - MUSKOGEE 345KV CKT 1'
12WP	00NR	2	'FROM->TO'	G11_050	'CIMARRON - DRAPER LAKE 345KV CKT 1'	717	0.050	101.30	'FT SMITH - MUSKOGEE 345KV CKT 1'
13WP	00NR	2	'FROM->TO'	G11_050	'CIMARRON - DRAPER LAKE 345KV CKT 1'	717	0.050	106.98	'FIXICO TAP - WELEETKA 138KV CKT 1'
12WP	00NR	2	'FROM->TO'	G11_050	'CIMARRON - DRAPER LAKE 345KV CKT 1'	717	0.050	102.55	'FIXICO TAP - WELEETKA 138KV CKT 1'
13WP	00NR	2	'FROM->TO'	G11_050	'CIMARRON - DRAPER LAKE 345KV CKT 1'	717	0.050	110.40	'LAWTON EASTSIDE - OKLAUNION 345KV CKT 1'
13WP	00NR	2	'FROM->TO'	G11_050	'CIMARRON - DRAPER LAKE 345KV CKT 1'	717	0.050	109.22	'G05-15T 345.00 - OKLAUNION 345KV CKT 1'
13WP	00NR	2	'FROM->TO'	G11_050	'CIMARRON - DRAPER LAKE 345KV CKT 1'	717	0.050	109.04	'G05-15T 345.00 - TUCO INTERCHANGE 345KV CKT 1'
13WP	00NR	2	'FROM->TO'	G11_050	'CIMARRON - DRAPER LAKE 345KV CKT 1'	717	0.050	106.74	'OGE3TERM36'
12WP	00NR	2	'FROM->TO'	G11_050	'CIMARRON - DRAPER LAKE 345KV CKT 1'	717	0.050	106.36	'LAWTON EASTSIDE - OKLAUNION 345KV CKT 1'
12WP	00NR	2	'FROM->TO'	G11_050	'CIMARRON - DRAPER LAKE 345KV CKT 1'	717	0.050	105.07	'G05-15T 345.00 - OKLAUNION 345KV CKT 1'
12WP	00NR	2	'FROM->TO'	G11_050	'CIMARRON - DRAPER LAKE 345KV CKT 1'	717	0.050	104.87	'G05-15T 345.00 - TUCO INTERCHANGE 345KV CKT 1'
13WP	00NR	2	'FROM->TO'	G11_050	'CIMARRON - DRAPER LAKE 345KV CKT 1'	717	0.050	106.28	'FRANKLIN - PINK SW 138KV CKT 1'
13WP	00NR	2	'FROM->TO'	G11_050	'CIMARRON - DRAPER LAKE 345KV CKT 1'	717	0.050	106.01	'FRANKLIN - FRANKLIN SW 138KV CKT 1'
12WP	00NR	2	'FROM->TO'	G11_050	'CIMARRON - DRAPER LAKE 345KV CKT 1'	717	0.050	101.94	'FRANKLIN - PINK SW 138KV CKT 1'
12WP	00NR	2	'FROM->TO'	G11_050	'CIMARRON - DRAPER LAKE 345KV CKT 1'	717	0.050	101.66	'FRANKLIN - FRANKLIN SW 138KV CKT 1'
17WP	00NR	2	'FROM->TO'	G11_050	'CIMARRON - DRAPER LAKE 345KV CKT 1'	717	0.050	102.03	'DBL-WICH-THI'
13WP	00NR	2	'FROM->TO'	G11_050	'CIMARRON - DRAPER LAKE 345KV CKT 1'	717	0.050	106.40	'NORTHWEST TEXARKANA - VALLIANT 345KV CKT 1'

SEASON	GROUP	SCENARIO	DIRECTION	SOURCE	MONITORED ELEMENT	RATE B (MVA)	TDF	(%MVA) LOADING	CONTINGENCY
17WP	00NR	2	'FROM->TO'	G11_050	'CIMARRON - DRAPER LAKE 345KV CKT 1'	717	0.050	109.72	'ARCADIA - HORSESHOE LAKE 345KV CKT 1'
17WP	00NR	2	'FROM->TO'	G11_050	'CIMARRON - DRAPER LAKE 345KV CKT 1'	717	0.050	109.71	'HORSESHOE LAKE - SEMINOLE 345KV CKT 1'
12WP	00NR	2	'FROM->TO'	G11_050	'CIMARRON - DRAPER LAKE 345KV CKT 1'	717	0.050	102.63	'PECAN CREEK - RIVERSIDE STATION 345KV CKT 1'
12WP	00NR	2	'FROM->TO'	G11_050	'CIMARRON - DRAPER LAKE 345KV CKT 1'	717	0.050	102.11	'NORTHWEST TEXARKANA - VALLIANT 345KV CKT 1'
13WP	00NR	2	'FROM->TO'	G11_050	'CIMARRON - DRAPER LAKE 345KV CKT 1'	717	0.049	108.15	'CLARKSVILLE - ONETA 345KV CKT 1'
17WP	00NR	2	'FROM->TO'	G11_050	'CIMARRON - DRAPER LAKE 345KV CKT 1'	717	0.049	101.45	'ANDERSONCO 345.00 - LACYGNE 345KV CKT 1'
17WP	00NR	2	'FROM->TO'	G11_050	'CIMARRON - DRAPER LAKE 345KV CKT 1'	717	0.049	101.33	'ANDERSONCO 345.00 - WOLF CREEK 345KV CKT 1'
12WP	00NR	2	'FROM->TO'	G11_050	'CIMARRON - DRAPER LAKE 345KV CKT 1'	717	0.049	103.70	'CLARKSVILLE - ONETA 345KV CKT 1'
17WP	00NR	2	'FROM->TO'	G11_050	'CIMARRON - DRAPER LAKE 345KV CKT 1'	717	0.049	100.30	'MCCLAIN - PLEASANT VALLEY 138KV CKT 1'
13WP	00NR	2	'FROM->TO'	G11_050	'CIMARRON - DRAPER LAKE 345KV CKT 1'	717	0.048	106.25	'LYDIA - WELSH 345KV CKT 1'
17WP	00NR	2	'FROM->TO'	G11_050	'CIMARRON - DRAPER LAKE 345KV CKT 1'	717	0.048	100.00	'OGE3TERM12'
17WP	00NR	2	'FROM->TO'	G11_050	'CIMARRON - DRAPER LAKE 345KV CKT 1'	717	0.048	106.14	'GEN336821 1-GRAND GULF UNIT'
17WP	00NR	2	'FROM->TO'	G11_050	'CIMARRON - DRAPER LAKE 345KV CKT 1'	717	0.048	105.78	'GEN336153 1-WATERFORD UNIT#3'
17WP	00NR	2	'FROM->TO'	G11_050	'CIMARRON - DRAPER LAKE 345KV CKT 1'	717	0.048	104.90	'GEN337911 1-ARKANSAS NUCLEAR ONE UNIT #2'
17WP	00NR	2	'FROM->TO'	G11_050	'CIMARRON - DRAPER LAKE 345KV CKT 1'	717	0.048	104.78	'GEN335831 1-RIVERBEND UNIT#1'
17WP	00NR	2	'FROM->TO'	G11_050	'CIMARRON - DRAPER LAKE 345KV CKT 1'	717	0.048	104.19	'GEN501801 1-DOLET HILLS UNIT1'
17WP	00NR	2	'FROM->TO'	G11_050	'CIMARRON - DRAPER LAKE 345KV CKT 1'	717	0.048	103.86	'GEN337910 1-ARKANSAS NUCLEAR ONE UNIT #1'
17WP	00NR	2	'FROM->TO'	G11_050	'CIMARRON - DRAPER LAKE 345KV CKT 1'	717	0.048	103.03	'GEN337652 1-WHITE BLUFF UNIT #1'
17WP	00NR	2	'FROM->TO'	G11_050	'CIMARRON - DRAPER LAKE 345KV CKT 1'	717	0.048	102.84	'GEN336252 1-NINEMILE POINT UNIT#5'
17WP	00NR	2	'FROM->TO'	G11_050	'CIMARRON - DRAPER LAKE 345KV CKT 1'	717	0.048	102.70	'GEN336251 1-NINEMILE POINT UNIT#4'
17WP	00NR	2	'FROM->TO'	G11_050	'CIMARRON - DRAPER LAKE 345KV CKT 1'	717	0.048	102.62	'GEN337653 1-WHITE BLUFF UNIT #2'
17WP	00NR	2	'FROM->TO'	G11_050	'CIMARRON - DRAPER LAKE 345KV CKT 1'	717	0.048	102.48	'GEN501813 1-RODEMACHER UNIT 3'
17WP	00NR	2	'FROM->TO'	G11_050	'CIMARRON - DRAPER LAKE 345KV CKT 1'	717	0.048	102.45	'GEN338146 1-INDEPENDENCE UNIT #2'
17WP	00NR	2	'FROM->TO'	G11_050	'CIMARRON - DRAPER LAKE 345KV CKT 1'	717	0.048	102.28	'GEN337041 1-GERALD ANDRUS'
17WP	00NR	2	'FROM->TO'	G11_050	'CIMARRON - DRAPER LAKE 345KV CKT 1'	717	0.048	102.28	'GEN338143 1-INDEPENDENCE UNIT #1'
17WP	00NR	2	'FROM->TO'	G11_050	'CIMARRON - DRAPER LAKE 345KV CKT 1'	717	0.048	101.95	'GEN335206 1-NELSON UNIT 6'
17WP	00NR	2	'FROM->TO'	G11_050	'CIMARRON - DRAPER LAKE 345KV CKT 1'	717	0.048	101.92	'GEN334440 1-SABINE UNIT 4'
17WP	00NR	2	'FROM->TO'	G11_050	'CIMARRON - DRAPER LAKE 345KV CKT 1'	717	0.048	101.91	'GEN336831 1-BAXTER WILSON SES'
17WP	00NR	2	'FROM->TO'	G11_050	'CIMARRON - DRAPER LAKE 345KV CKT 1'	717	0.048	101.89	'GEN501812 1-RODEMACHER UNIT 2'
17WP	00NR	2	'FROM->TO'	G11_050	'CIMARRON - DRAPER LAKE 345KV CKT 1'	717	0.048	101.45	'GEN334441 1-SABINE UNIT 5'
17WP	00NR	2	'FROM->TO'	G11_050	'CIMARRON - DRAPER LAKE 345KV CKT 1'	717	0.048	101.32	'GEN335204 1-NELSON UNIT 4'
17WP	00NR	2	'FROM->TO'	G11_050	'CIMARRON - DRAPER LAKE 345KV CKT 1'	717	0.048	101.06	'GEN334433 1-SABINE UNIT 3'
17WP	00NR	2	'FROM->TO'	G11_050	'CIMARRON - DRAPER LAKE 345KV CKT 1'	717	0.048	101.00	'GEN336801 1-BAXTER WILSON UNIT #1'
17WP	00NR	2	'FROM->TO'	G11_050	'CIMARRON - DRAPER LAKE 345KV CKT 1'	717	0.048	100.93	'GEN338388 1-1PLUMPT 23.000'
12WP	00NR	2	'FROM->TO'	G11_050	'CIMARRON - DRAPER LAKE 345KV CKT 1'	717	0.048	101.99	'LYDIA - WELSH 345KV CKT 1'
13WP	00NR	2	'FROM->TO'	G11_050	'CIMARRON - DRAPER LAKE 345KV CKT 1'	717	0.048	108.77	'CANADIAN RIVER - MUSKOGEE 345KV CKT 1'
13WP	00NR	2	'FROM->TO'	G11_050	'CIMARRON - DRAPER LAKE 345KV CKT 1'	717	0.048	104.34	'CLARKSVILLE - MUSKOGEE 345KV CKT 1'
13WP	00NR	2	'FROM->TO'	G11_050	'CIMARRON - DRAPER LAKE 345KV CKT 1'	717	0.048	105.67	'LYDIA - VALLIANT 345KV CKT 1'
12WP	00NR	2	'FROM->TO'	G11_050	'CIMARRON - DRAPER LAKE 345KV CKT 1'	717	0.048	101.38	'LYDIA - VALLIANT 345KV CKT 1'
17WP	00NR	2	'FROM->TO'	G11_050	'CIMARRON - DRAPER LAKE 345KV CKT 1'	717	0.048	100.26	'OGE3TERM14'
12WP	00NR	2	'FROM->TO'	G11_050	'CIMARRON - DRAPER LAKE 345KV CKT 1'	717	0.048	103.95	'MUSKOGEE - PITTSBURG 345KV CKT 1'
13WP	00NR	2	'FROM->TO'	G11_050	'CIMARRON - DRAPER LAKE 345KV CKT 1'	717	0.047	105.23	'DRAPER LAKE - SEMINOLE 345KV CKT 3'
12WP	00NR	2	'FROM->TO'	G11_050	'CIMARRON - DRAPER LAKE 345KV CKT 1'	717	0.047	101.49	'DRAPER LAKE - SEMINOLE 345KV CKT 3'
13WP	00NR	2	'FROM->TO'	G11_050	'CIMARRON - CZECH HALL 138KV CKT 1'	382	0.047	100.06	'CIMARRON - HAYMAKER 138KV CKT 1'
12WP	00NR	2	'FROM->TO'	G11_050	'CIMARRON - CZECH HALL 138KV CKT 1'	382	0.047	102.13	'CIMARRON - HAYMAKER 138KV CKT 1'
12WP	00NR	2	'FROM->TO'	G11_050	'CIMARRON - CZECH HALL 138KV CKT 1'	382	0.047	100.68	'DIVISION AVE - HAYMAKER 138KV CKT 1'
13WP	00NR	2	'FROM->TO'	G11_050	'CIMARRON - DRAPER LAKE 345KV CKT 1'	717	0.047	105.25	'SPP-AEPW-01'
17WP	00NR	2	'FROM->TO'	G11_050	'CIMARRON - DRAPER LAKE 345KV CKT 1'	717	0.047	100.90	'LAWTON EASTSIDE - OKLAUNION 345KV CKT 1'
13WP	00NR	2	'FROM->TO'	G11_050	'CIMARRON - DRAPER LAKE 345KV CKT 1'	717	0.046	113.02	'CIMARRON (CIMARON2) 345/138/13.8KV TRANSFORMER CKT 1'
12WP	00NR	2	'FROM->TO'	G11_050	'CIMARRON - DRAPER LAKE 345KV CKT 1'	717	0.045	109.07	'CIMARRON (CIMARON2) 345/138/13.8KV TRANSFORMER CKT 1'
13WP	00NR	2	'FROM->TO'	G11_050	'CIMARRON - DRAPER LAKE 345KV CKT 1'	717	0.045	113.23	'CIMARRON (CIMARON1) 345/138/13.8KV TRANSFORMER CKT 1'
12WP	00NR	2	'FROM->TO'	G11_050	'CIMARRON - DRAPER LAKE 345KV CKT 1'	717	0.045	109.29	'CIMARRON (CIMARON1) 345/138/13.8KV TRANSFORMER CKT 1'
13WP	00NR	2	'FROM->TO'	G11_050	'CIMARRON - DRAPER LAKE 345KV CKT 1'	717	0.044	103.77	'DRAPER LAKE - SEMINOLE 345KV CKT 2'
13WP	00NR	2	'FROM->TO'	G11_050	'CIMARRON - DRAPER LAKE 345KV CKT 1'	717	0.044	103.65	'DRAPER LAKE - SEMINOLE 345KV CKT 1'
12WP	00NR	2	'FROM->TO'	G11_050	'CIMARRON - DRAPER LAKE 345KV CKT 1'	717	0.044	100.48	'DRAPER LAKE - SEMINOLE 345KV CKT 2'
12WP	00NR	2	'FROM->TO'	G11_050	'CIMARRON - DRAPER LAKE 345KV CKT 1'	717	0.044	100.36	'DRAPER LAKE - SEMINOLE 345KV CKT 1'
17WP	00NR	2	'FROM->TO'	G11_050	'CIMARRON - DRAPER LAKE 345KV CKT 1'	717	0.043	102.59	'CIMARRON (CIMARON2) 345/138/13.8KV TRANSFORMER CKT 1'
17SP	00NR	2	'FROM->TO'	G11_050	'LAWEASOKLUNI'	425	0.043	138.90	'BASE CASE'
17WP	00NR	2	'FROM->TO'	G11_050	'CIMARRON - DRAPER LAKE 345KV CKT 1'	717	0.042	102.77	'CIMARRON (CIMARON1) 345/138/13.8KV TRANSFORMER CKT 1'
13SP	00NR	2	'FROM->TO'	G11_050	'LAWEASOKLUNI'	425	0.042	134.50	'BASE CASE'
17WP	00NR	2	'FROM->TO'	G11_050	'LAWEASOKLUNI'	425	0.042	168.50	'BASE CASE'
12SP	00NR	2	'FROM->TO'	G11_050	'LAWEASOKLUNI'	425	0.042	135.20	'BASE CASE'
13WP	00NR	2	'FROM->TO'	G11_050	'LAWEASOKLUNI'	425	0.041	178.80	'BASE CASE'
12WP	00NR	2	'FROM->TO'	G11_050	'LAWEASOKLUNI'	425	0.041	179.70	'BASE CASE'
13WP	00NR	2	'FROM->TO'	G11_050	'CIMARRON - DRAPER LAKE 345KV CKT 1'	717	0.041	101.30	'PITTSBURG - VALLIANT 345KV CKT 1'
12WP	00NR	2	'FROM->TO'	G11_050	'CIMARRON - CZECH HALL 138KV CKT 1'	382	0.038	101.17	'CIMARRON - DRAPER LAKE 345KV CKT 1'
12WP	00NR	2	'FROM->TO'	G11_050	'CIMARRON - CZECH HALL 138KV CKT 1'	382	0.038	100.38	'CIMARRON - SARA 138KV CKT 1'
13WP	00NR	2	'FROM->TO'	G11_050	'CIMARRON - DRAPER LAKE 345KV CKT 1'	717	0.037	108.35	'GRACEMONT (BANK 1) 345/138/13.8KV TRANSFORMER CKT 1'
12WP	00NR	2	'FROM->TO'	G11_050	'CIMARRON - DRAPER LAKE 345KV CKT 1'	717	0.037	104.14	'GRACEMONT (BANK 1) 345/138/13.8KV TRANSFORMER CKT 1'
13WP	00NR	2	'FROM->TO'	G11_050	'CIMARRON - DRAPER LAKE 345KV CKT 1'	717	0.033	103.41	'MUSKOGEE - SEMINOLE 345KV CKT 1'
12WP	00NR	3	'TO->FROM'	G11_050	'COMANCHE - COMANCHE TAP 69KV CKT 1'	48	0.207	100.94	'G11_050T 138.00 - RUSH SPRINGS TAP 138KV CKT 1'
13WP	00NR	3	'FROM->TO'	G11_050	'CORN TAP - PAOLI 138KV CKT 1'	143	0.082	102.68	'LAWTON EASTSIDE - SUNNYSIDE 345KV CKT 1'
12WP	00NR	3	'FROM->TO'	G11_050	'CORN TAP - PAOLI 138KV CKT 1'	143	0.082	103.94	'LAWTON EASTSIDE - SUNNYSIDE 345KV CKT 1'
13WP	00NR	3	'TO->FROM'	G11_050	'COMANCHE - COMANCHE TAP 69KV CKT 1'	48	0.066	100.59	'ANADARKO - GEORGIA 138KV CKT 1'
12WP	00NR	3	'TO->FROM'	G11_050	'COMANCHE - COMANCHE TAP 69KV CKT 1'	48	0.066	104.63	'ANADARKO - GEORGIA 138KV CKT 1'
12WP	00NR	3	'TO->FROM'	G11_050	'COMANCHE - COMANCHE TAP 69KV CKT 1'	48	0.066	102.33	'FLETCHER - GEORGIA 138KV CKT 1'
12WP	00NR	3	'FROM->TO'	G11_050	'DUNCAN - TOSCO 69KV CKT 1'	53	0.066	102.05	'ANADARKO - GEORGIA 138KV CKT 1'
12WP	00NR	3	'FROM->TO'	G11_050	'DUNCAN - TOSCO 69KV CKT 1'	53	0.066	100.00	'FLETCHER - GEORGIA 138KV CKT 1'

SEASON	GROUP	SCENARIO	DIRECTION	SOURCE	MONITORED ELEMENT	RATE B (MVA)	TDF	(%MVA) LOADING	CONTINGENCY
12WP	00NR	3	'TO->FROM'	G11_050	'COMANCHE - COMANCHE TAP 69KV CKT 1'	48	0.065	102.19	'EMPIRE - FLETCHER 138KV CKT 1'
17SP	00NR	3	'FROM->TO'	G11_050	'LAWEASOKLUNI'	425	0.043	139.10	'BASE CASE'
13SP	00NR	3	'FROM->TO'	G11_050	'LAWEASOKLUNI'	425	0.042	134.50	'BASE CASE'
17WP	00NR	3	'FROM->TO'	G11_050	'LAWEASOKLUNI'	425	0.042	169.00	'BASE CASE'
12SP	00NR	3	'FROM->TO'	G11_050	'LAWEASOKLUNI'	425	0.042	135.20	'BASE CASE'
13WP	00NR	3	'FROM->TO'	G11_050	'LAWEASOKLUNI'	425	0.041	179.40	'BASE CASE'
12WP	00NR	3	'FROM->TO'	G11_050	'LAWEASOKLUNI'	425	0.041	180.10	'BASE CASE'
12SP	00NR	0	'FROM->TO'	G11_051	'MATTHEWSON 345.00 - NORTHWEST 345KV CKT 1'	1195	0.465	112.53	'DBL-MATT-CIM'
13SP	00NR	0	'FROM->TO'	G11_051	'MATTHEWSON 345.00 - NORTHWEST 345KV CKT 1'	1195	0.464	112.07	'DBL-MATT-CIM'
12G	03ALL	0		G11_051	NCONV-Iteration Limit	0	0.452	9999.00	'DBL-MATT-TAT'
12G	03ALL2	0		G11_051	NCONV-Iteration Limit	0	0.452	9999.00	'DBL-MATT-TAT'
12WP	00NR	0	'FROM->TO'	G11_051	'MATTHEWSON 345.00 - NORTHWEST 345KV CKT 1'	1195	0.442	135.11	'DBL-MATT-CIM'
17WP	00NR	0	'FROM->TO'	G11_051	'MATTHEWSON 345.00 - NORTHWEST 345KV CKT 1'	1195	0.442	129.10	'DBL-MATT-CIM'
13WP	00NR	0	'FROM->TO'	G11_051	'MATTHEWSON 345.00 - NORTHWEST 345KV CKT 1'	1195	0.441	135.51	'DBL-MATT-CIM'
12G	01NR	0	'FROM->TO'	G11_051	'MATTHEWSON 345.00 - NORTHWEST 345KV CKT 1'	1195	0.439	128.09	'DBL-MATT-CIM'
12G	01G11_051	0	'FROM->TO'	G11_051	'MATTHEWSON 345.00 - NORTHWEST 345KV CKT 1'	1195	0.350	122.13	'DBL-MATT-CIM'
12G	1	0	'FROM->TO'	G11_051	'MATTHEWSON 345.00 - NORTHWEST 345KV CKT 1'	1195	0.350	121.64	'DBL-MATT-CIM'
12G	3	0	'FROM->TO'	G11_051	'MATTHEWSON 345.00 - NORTHWEST 345KV CKT 1'	1195	0.344	113.86	'DBL-MATT-CIM'
12WP	00NR	0	'FROM->TO'	G11_051	'CIMARRON - DRAPER LAKE 345KV CKT 1'	717	0.195	112.50	'ARCADIA - NORTHWEST 345KV CKT 1'
12WP	00NR	0	'TO->FROM'	G11_051	'BENTON - WICHITA 345KV CKT 1'	956	0.187	108.26	'DBL-MATT-TAT'
13WP	00NR	0	'TO->FROM'	G11_051	'BENTON - WICHITA 345KV CKT 1'	956	0.184	105.51	'DBL-MATT-TAT'
13WP	00NR	0	'FROM->TO'	G11_051	'CIMARRON - DRAPER LAKE 345KV CKT 1'	717	0.183	117.35	'ARCADIA - NORTHWEST 345KV CKT 1'
12SP	00NR	0	'TO->FROM'	G11_051	'BENTON - WICHITA 345KV CKT 1'	956	0.182	100.67	'DBL-MATT-TAT'
17WP	00NR	0	'FROM->TO'	G11_051	'CIMARRON - DRAPER LAKE 345KV CKT 1'	717	0.176	104.47	'ARCADIA - NORTHWEST 345KV CKT 1'
12WP	00NR	0	'FROM->TO'	G11_051	'CIMARRON - DRAPER LAKE 345KV CKT 1'	717	0.157	106.21	'MATTHEWSON 345.00 - NORTHWEST 345KV CKT 1'
12WP	00NR	0	'FROM->TO'	G11_051	'CIMARRON - DRAPER LAKE 345KV CKT 1'	717	0.155	117.18	'LAWTON EASTSIDE - SUNNYSIDE 345KV CKT 1'
13WP	00NR	0	'FROM->TO'	G11_051	'CIMARRON - DRAPER LAKE 345KV CKT 1'	717	0.149	110.42	'MATTHEWSON 345.00 - NORTHWEST 345KV CKT 1'
12WP	00NR	0	'FROM->TO'	G11_051	'CIMARRON - DRAPER LAKE 345KV CKT 1'	717	0.149	108.82	'ARCADIA - HORSESHOE LAKE 345KV CKT 1'
12WP	00NR	0	'FROM->TO'	G11_051	'CIMARRON - DRAPER LAKE 345KV CKT 1'	717	0.149	108.82	'HORSESHOE LAKE - SEMINOLE 345KV CKT 1'
17WP	00NR	0	'FROM->TO'	G11_051	'CIMARRON - DRAPER LAKE 345KV CKT 1'	717	0.146	101.14	'MATTHEWSON 345.00 - NORTHWEST 345KV CKT 1'
12WP	00NR	0	'FROM->TO'	G11_051	'CIMARRON - DRAPER LAKE 345KV CKT 1'	717	0.146	100.18	'CIMARRON - NORTHWEST 345KV CKT 1'
12WP	00NR	0	'FROM->TO'	G11_051	'CIMARRON - DRAPER LAKE 345KV CKT 1'	717	0.146	109.18	'CLEVELAND - SOONER 345KV CKT 1'
13WP	00NR	0	'FROM->TO'	G11_051	'CIMARRON - DRAPER LAKE 345KV CKT 1'	717	0.146	121.69	'LAWTON EASTSIDE - SUNNYSIDE 345KV CKT 1'
12WP	00NR	0	'FROM->TO'	G11_051	'CIMARRON - DRAPER LAKE 345KV CKT 1'	717	0.145	104.13	'CIMARRON - SARA 138KV CKT 1'
12WP	00NR	0	'FROM->TO'	G11_051	'CIMARRON - DRAPER LAKE 345KV CKT 1'	717	0.145	102.88	'MCCLAIN - SARA 138KV CKT 1'
12WP	00NR	0	'FROM->TO'	G11_051	'CIMARRON - DRAPER LAKE 345KV CKT 1'	717	0.144	102.04	'DBL-WICH-THI'
12WP	00NR	0	'FROM->TO'	G11_051	'CIMARRON - DRAPER LAKE 345KV CKT 1'	717	0.144	104.28	'CLEVELAND - TULSA NORTH 345KV CKT 1'
12WP	00NR	0	'FROM->TO'	G11_051	'CIMARRON - DRAPER LAKE 345KV CKT 1'	717	0.144	100.00	'JOHNSON COUNTY - SUNNYSIDE 345KV CKT 1'
12WP	00NR	0	'FROM->TO'	G11_051	'CIMARRON - DRAPER LAKE 345KV CKT 1'	717	0.144	102.84	'CIMARRON - CZECH HALL 138KV CKT 1'
12WP	00NR	0	'FROM->TO'	G11_051	'CIMARRON - DRAPER LAKE 345KV CKT 1'	717	0.144	102.39	'CZECH HALL - XEROX 138KV CKT 1'
12WP	00NR	0	'FROM->TO'	G11_051	'CIMARRON - DRAPER LAKE 345KV CKT 1'	717	0.144	102.37	'MORGAN - XEROX 138KV CKT 1'
12WP	00NR	0	'FROM->TO'	G11_051	'CIMARRON - DRAPER LAKE 345KV CKT 1'	717	0.144	102.26	'MORGAN - MUSTANG 138KV CKT 1'
12WP	00NR	0	'FROM->TO'	G11_051	'CIMARRON - DRAPER LAKE 345KV CKT 1'	717	0.143	103.74	'CIMARRON (CIMARON1) 345/138/13.8KV TRANSFORMER CKT 1'
12WP	00NR	0	'FROM->TO'	G11_051	'CIMARRON - DRAPER LAKE 345KV CKT 1'	717	0.143	103.53	'CIMARRON (CIMARON2) 345/138/13.8KV TRANSFORMER CKT 1'
12WP	00NR	0	'FROM->TO'	G11_051	'CIMARRON - DRAPER LAKE 345KV CKT 1'	717	0.143	100.00	'LAWTON EASTSIDE - OKLAUNION 345KV CKT 1'
12WP	00NR	0	'FROM->TO'	G11_051	'CIMARRON - DRAPER LAKE 345KV CKT 1'	717	0.142	100.96	'CANEYRV7 345.00 - NEOSHO 345KV CKT 1'
12WP	00NR	0	'FROM->TO'	G11_051	'CIMARRON - DRAPER LAKE 345KV CKT 1'	717	0.142	100.82	'CANEYRV7 345.00 - LATHAMS7 345.00 345KV CKT 1'
12WP	00NR	0	'FROM->TO'	G11_051	'CIMARRON - DRAPER LAKE 345KV CKT 1'	717	0.142	100.35	'LATHAMS7 345.00 - ROSE HILL 345KV CKT 1'
12WP	00NR	0	'FROM->TO'	G11_051	'CIMARRON - DRAPER LAKE 345KV CKT 1'	717	0.142	101.59	'NORTHWEST (NORTWST2) 345/138/13.8KV TRANSFORMER CKT 1'
12WP	00NR	0	'FROM->TO'	G11_051	'CIMARRON - DRAPER LAKE 345KV CKT 1'	717	0.142	100.97	'ANADARKO - POCASSETT 138KV CKT 1'
12WP	00NR	0	'FROM->TO'	G11_051	'CIMARRON - DRAPER LAKE 345KV CKT 1'	717	0.142	100.79	'POCASSETT - TUTTLE 138KV CKT 1'
12WP	00NR	0	'FROM->TO'	G11_051	'CIMARRON - DRAPER LAKE 345KV CKT 1'	717	0.142	100.35	'SUNSHINE CANYON - TUTTLE 138KV CKT 1'
12WP	00NR	0	'FROM->TO'	G11_051	'CIMARRON - DRAPER LAKE 345KV CKT 1'	717	0.142	100.80	'NORTHWEST (NORTWST3) 345/138/13.8KV TRANSFORMER CKT 1'
17WP	00NR	0	'FROM->TO'	G11_051	'CIMARRON - DRAPER LAKE 345KV CKT 1'	717	0.142	109.96	'LAWTON EASTSIDE - SUNNYSIDE 345KV CKT 1'
12WP	00NR	0	'FROM->TO'	G11_051	'CIMARRON - DRAPER LAKE 345KV CKT 1'	717	0.142	100.63	'REDBUD - RIVERSIDE STATION 345KV CKT 1'
12WP	00NR	0	'FROM->TO'	G11_051	'CIMARRON - DRAPER LAKE 345KV CKT 1'	717	0.141	101.12	'ANDERSONCO 345.00 - LACYGNE 345KV CKT 1'
12WP	00NR	0	'FROM->TO'	G11_051	'CIMARRON - DRAPER LAKE 345KV CKT 1'	717	0.141	101.01	'ANDERSONCO 345.00 - WOLF CREEK 345KV CKT 1'
13WP	00NR	0	'FROM->TO'	G11_051	'CIMARRON - DRAPER LAKE 345KV CKT 1'	717	0.141	105.74	'DBL-THIS-WWR'
12WP	00NR	0	'FROM->TO'	G11_051	'CIMARRON - DRAPER LAKE 345KV CKT 1'	717	0.141	106.80	'GEN336821 1-GRAND GULF UNIT'
12WP	00NR	0	'FROM->TO'	G11_051	'CIMARRON - DRAPER LAKE 345KV CKT 1'	717	0.141	106.35	'GEN336153 1-WATERFORD UNIT#3'
12WP	00NR	0	'FROM->TO'	G11_051	'CIMARRON - DRAPER LAKE 345KV CKT 1'	717	0.141	105.55	'GEN515042 1-SEMINOLE 3G'
12WP	00NR	0	'FROM->TO'	G11_051	'CIMARRON - DRAPER LAKE 345KV CKT 1'	717	0.141	105.38	'GEN337911 1-ARKANSAS NUCLEAR ONE UNIT #2'
12WP	00NR	0	'FROM->TO'	G11_051	'CIMARRON - DRAPER LAKE 345KV CKT 1'	717	0.141	105.22	'GEN335831 1-RIVERBEND UNIT#1'
12WP	00NR	0	'FROM->TO'	G11_051	'CIMARRON - DRAPER LAKE 345KV CKT 1'	717	0.141	104.59	'GEN515041 1-SEMINOLE 2G'
12WP	00NR	0	'FROM->TO'	G11_051	'CIMARRON - DRAPER LAKE 345KV CKT 1'	717	0.141	104.30	'GEN501801 1-DOLET HILLS UNIT1'
12WP	00NR	0	'FROM->TO'	G11_051	'CIMARRON - DRAPER LAKE 345KV CKT 1'	717	0.141	104.15	'GEN337910 1-ARKANSAS NUCLEAR ONE UNIT #1'
12WP	00NR	0	'FROM->TO'	G11_051	'CIMARRON - DRAPER LAKE 345KV CKT 1'	717	0.141	103.74	'GEN520947 1-HUGO1'
12WP	00NR	0	'FROM->TO'	G11_051	'CIMARRON - DRAPER LAKE 345KV CKT 1'	717	0.141	103.26	'GEN337652 1-WHITE BLUFF UNIT #1'
12WP	00NR	0	'FROM->TO'	G11_051	'CIMARRON - DRAPER LAKE 345KV CKT 1'	717	0.141	102.89	'GEN509403 1-PIRKEY GENERATION'
12WP	00NR	0	'FROM->TO'	G11_051	'CIMARRON - DRAPER LAKE 345KV CKT 1'	717	0.141	102.89	'GEN509416 1-TURK GENERATION'
12WP	00NR	0	'FROM->TO'	G11_051	'CIMARRON - DRAPER LAKE 345KV CKT 1'	717	0.141	102.70	'GEN336252 1-NINEMILE POINT UNIT#5'
12WP	00NR	0	'FROM->TO'	G11_051	'CIMARRON - DRAPER LAKE 345KV CKT 1'	717	0.141	102.68	'GEN338146 1-INDEPENDENCE UNIT #2'
12WP	00NR	0	'FROM->TO'	G11_051	'CIMARRON - DRAPER LAKE 345KV CKT 1'	717	0.141	102.67	'GEN515040 1-SEMINOLE 1G'
12WP	00NR	0	'FROM->TO'	G11_051	'CIMARRON - DRAPER LAKE 345KV CKT 1'	717	0.141	102.66	'GEN336251 1-NINEMILE POINT UNIT#4'
12WP	00NR	0	'FROM->TO'	G11_051	'CIMARRON - DRAPER LAKE 345KV CKT 1'	717	0.141	102.60	'GEN501813 1-RODEMACHER UNIT 3'
12WP	00NR	0	'FROM->TO'	G11_051	'CIMARRON - DRAPER LAKE 345KV CKT 1'	717	0.141	102.51	'GEN338143 1-INDEPENDENCE UNIT #1'
12WP	00NR	0	'FROM->TO'	G11_051	'CIMARRON - DRAPER LAKE 345KV CKT 1'	717	0.141	102.49	'GEN337041 1-GERALD ANDRUS'
12WP	00NR	0	'FROM->TO'	G11_051	'CIMARRON - DRAPER LAKE 345KV CKT 1'	717	0.141	102.45	'GEN337653 1-WHITE BLUFF UNIT #2'

SEASON	GROUP	SCENARIO	DIRECTION	SOURCE	MONITORED ELEMENT	RATE B (MVA)	TDF	(%MVA) LOADING	CONTINGENCY
12WP	00NR	0	'FROM->TO'	G11_051	'CIMARRON - DRAPER LAKE 345KV CKT 1'	717	0.141	101.98	'GEN501812 1-RODEMACHER UNIT 2'
12WP	00NR	0	'FROM->TO'	G11_051	'CIMARRON - DRAPER LAKE 345KV CKT 1'	717	0.141	101.96	'GEN509406 1-WELSH #3'
12WP	00NR	0	'FROM->TO'	G11_051	'CIMARRON - DRAPER LAKE 345KV CKT 1'	717	0.141	101.96	'GEN509405 1-WELSH #2'
12WP	00NR	0	'FROM->TO'	G11_051	'CIMARRON - DRAPER LAKE 345KV CKT 1'	717	0.141	101.96	'GEN509404 1-WELSH #1'
12WP	00NR	0	'FROM->TO'	G11_051	'CIMARRON - DRAPER LAKE 345KV CKT 1'	717	0.141	101.85	'GEN335206 1-NELSON UNIT 6'
12WP	00NR	0	'FROM->TO'	G11_051	'CIMARRON - DRAPER LAKE 345KV CKT 1'	717	0.141	101.64	'GEN336831 1-BAXTER WILSON SES'
12WP	00NR	0	'FROM->TO'	G11_051	'CIMARRON - DRAPER LAKE 345KV CKT 1'	717	0.141	101.61	'GEN334440 1-SABINE UNIT 4'
12WP	00NR	0	'FROM->TO'	G11_051	'CIMARRON - DRAPER LAKE 345KV CKT 1'	717	0.141	101.61	'GEN515226 1-MUSKOGEE 6G'
12WP	00NR	0	'FROM->TO'	G11_051	'CIMARRON - DRAPER LAKE 345KV CKT 1'	717	0.141	101.42	'GEN338388 1-1PLUMPT 23.000'
12WP	00NR	0	'FROM->TO'	G11_051	'CIMARRON - DRAPER LAKE 345KV CKT 1'	717	0.141	101.22	'GEN515225 1-MUSKOGEE 5G'
12WP	00NR	0	'FROM->TO'	G11_051	'CIMARRON - DRAPER LAKE 345KV CKT 1'	717	0.141	101.22	'GEN515223 1-MUSKOGEE 4G'
12WP	00NR	0	'FROM->TO'	G11_051	'CIMARRON - DRAPER LAKE 345KV CKT 1'	717	0.141	101.19	'GEN335204 1-NELSON UNIT 4'
12WP	00NR	0	'FROM->TO'	G11_051	'CIMARRON - DRAPER LAKE 345KV CKT 1'	717	0.141	101.11	'GEN334433 1-SABINE UNIT 3'
12WP	00NR	0	'FROM->TO'	G11_051	'CIMARRON - DRAPER LAKE 345KV CKT 1'	717	0.141	101.11	'GEN336801 1-BAXTER WILSON UNIT #1'
12WP	00NR	0	'FROM->TO'	G11_051	'CIMARRON - DRAPER LAKE 345KV CKT 1'	717	0.141	101.11	'GEN334441 1-SABINE UNIT 5'
12WP	00NR	0	'FROM->TO'	G11_051	'CIMARRON - DRAPER LAKE 345KV CKT 1'	717	0.141	100.00	'GEN336170 1-GULF OXY U4'
12G	03ALL	0		G11_051	NCONV-Iteration Limit	0	0.140	9999.00	'DBL-WICH-THI'
12G	03ALL2	0		G11_051	NCONV-Blown Up	0	0.140	9999.00	'DBL-WICH-THI'
13WP	00NR	0	'FROM->TO'	G11_051	'CIMARRON - DRAPER LAKE 345KV CKT 1'	717	0.139	107.46	'CIMARRON - SARA 138KV CKT 1'
13WP	00NR	0	'FROM->TO'	G11_051	'CIMARRON - DRAPER LAKE 345KV CKT 1'	717	0.139	106.37	'MCCLAIN - SARA 138KV CKT 1'
13WP	00NR	0	'FROM->TO'	G11_051	'CIMARRON - DRAPER LAKE 345KV CKT 1'	717	0.138	103.94	'SOONER - WOODRING 345KV CKT 1'
13WP	00NR	0	'FROM->TO'	G11_051	'CIMARRON - DRAPER LAKE 345KV CKT 1'	717	0.138	114.08	'ARCADIA - HORSESHOE LAKE 345KV CKT 1'
13WP	00NR	0	'FROM->TO'	G11_051	'CIMARRON - DRAPER LAKE 345KV CKT 1'	717	0.138	114.05	'HORSESHOE LAKE - SEMINOLE 345KV CKT 1'
13WP	00NR	0	'FROM->TO'	G11_051	'CIMARRON - DRAPER LAKE 345KV CKT 1'	717	0.138	104.53	'CIMARRON - NORTHWEST 345KV CKT 1'
13WP	00NR	0	'FROM->TO'	G11_051	'CIMARRON - DRAPER LAKE 345KV CKT 1'	717	0.137	113.22	'CLEVELAND - SOONER 345KV CKT 1'
13WP	00NR	0	'FROM->TO'	G11_051	'CIMARRON - DRAPER LAKE 345KV CKT 1'	717	0.136	101.78	'PECAN CREEK - RIVERSIDE STATION 345KV CKT 1'
13WP	00NR	0	'FROM->TO'	G11_051	'CIMARRON - DRAPER LAKE 345KV CKT 1'	717	0.135	107.59	'CIMARRON (CIMARON1) 345/138/13.8KV TRANSFORMER CKT 1'
13WP	00NR	0	'FROM->TO'	G11_051	'CIMARRON - DRAPER LAKE 345KV CKT 1'	717	0.135	106.85	'CIMARRON - CZECH HALL 138KV CKT 1'
13WP	00NR	0	'FROM->TO'	G11_051	'CIMARRON - DRAPER LAKE 345KV CKT 1'	717	0.135	106.40	'CZECH HALL - XEROX 138KV CKT 1'
13WP	00NR	0	'FROM->TO'	G11_051	'CIMARRON - DRAPER LAKE 345KV CKT 1'	717	0.135	106.38	'MORGAN - XEROX 138KV CKT 1'
13WP	00NR	0	'FROM->TO'	G11_051	'CIMARRON - DRAPER LAKE 345KV CKT 1'	717	0.135	106.33	'MORGAN - MUSTANG 138KV CKT 1'
13WP	00NR	0	'FROM->TO'	G11_051	'CIMARRON - DRAPER LAKE 345KV CKT 1'	717	0.135	108.44	'CLEVELAND - TULSA NORTH 345KV CKT 1'
13WP	00NR	0	'FROM->TO'	G11_051	'CIMARRON - DRAPER LAKE 345KV CKT 1'	717	0.135	107.39	'CIMARRON (CIMARON2) 345/138/13.8KV TRANSFORMER CKT 1'
13WP	00NR	0	'FROM->TO'	G11_051	'CIMARRON - DRAPER LAKE 345KV CKT 1'	717	0.135	104.56	'JOHNSON COUNTY - SUNNYSIDE 345KV CKT 1'
17WP	00NR	0	'FROM->TO'	G11_051	'CIMARRON - DRAPER LAKE 345KV CKT 1'	717	0.135	104.31	'ARCADIA - HORSESHOE LAKE 345KV CKT 1'
17WP	00NR	0	'FROM->TO'	G11_051	'CIMARRON - DRAPER LAKE 345KV CKT 1'	717	0.135	104.31	'HORSESHOE LAKE - SEMINOLE 345KV CKT 1'
13WP	00NR	0	'FROM->TO'	G11_051	'CIMARRON - DRAPER LAKE 345KV CKT 1'	717	0.135	103.06	'JOHNSON COUNTY - PITTSBURG 345KV CKT 1'
13WP	00NR	0	'FROM->TO'	G11_051	'CIMARRON - DRAPER LAKE 345KV CKT 1'	717	0.135	103.16	'THISTLE 7 345.00 - WOODWARD DISTRICT EHV 345KV CKT 1'
13WP	00NR	0	'FROM->TO'	G11_051	'CIMARRON - DRAPER LAKE 345KV CKT 1'	717	0.135	103.16	'THISTLE 7 345.00 - WOODWARD DISTRICT EHV 345KV CKT 2'
13WP	00NR	0	'FROM->TO'	G11_051	'CIMARRON - DRAPER LAKE 345KV CKT 1'	717	0.135	102.86	'CLARKSVILLE - ONETA 345KV CKT 1'
13WP	00NR	0	'FROM->TO'	G11_051	'CIMARRON - DRAPER LAKE 345KV CKT 1'	717	0.135	103.39	'OGE3TERM18'
13WP	00NR	0	'FROM->TO'	G11_051	'CIMARRON - DRAPER LAKE 345KV CKT 1'	717	0.135	103.29	'36 & MERIDIAN - PENNSYLVANIA 138KV CKT 1'
13WP	00NR	0	'FROM->TO'	G11_051	'CIMARRON - DRAPER LAKE 345KV CKT 1'	717	0.135	103.55	'SUNSHINE CANYON - WESTMOORE 138KV CKT 1'
13WP	00NR	0	'FROM->TO'	G11_051	'CIMARRON - DRAPER LAKE 345KV CKT 1'	717	0.135	102.92	'FRANKLIN SW - WESTMOORE 138KV CKT 1'
13WP	00NR	0	'FROM->TO'	G11_051	'CIMARRON - DRAPER LAKE 345KV CKT 1'	717	0.134	105.18	'CANEYRV7 345.00 - NEOSHO 345KV CKT 1'
13WP	00NR	0	'FROM->TO'	G11_051	'CIMARRON - DRAPER LAKE 345KV CKT 1'	717	0.134	105.04	'CANEYRV7 345.00 - LATHAMS7 345.00 345KV CKT 1'
13WP	00NR	0	'FROM->TO'	G11_051	'CIMARRON - DRAPER LAKE 345KV CKT 1'	717	0.134	104.54	'LATHAMS7 345.00 - ROSE HILL 345KV CKT 1'
17WP	00NR	0	'FROM->TO'	G11_051	'CIMARRON - DRAPER LAKE 345KV CKT 1'	717	0.134	103.17	'CLEVELAND - SOONER 345KV CKT 1'
13WP	00NR	0	'FROM->TO'	G11_051	'CIMARRON - DRAPER LAKE 345KV CKT 1'	717	0.134	103.77	'BENTON - WICHITA 345KV CKT 1'
13WP	00NR	0	'FROM->TO'	G11_051	'CIMARRON - DRAPER LAKE 345KV CKT 1'	717	0.134	103.95	'LAWTON EASTSIDE - OKLAUNION 345KV CKT 1'
13WP	00NR	0	'FROM->TO'	G11_051	'CIMARRON - DRAPER LAKE 345KV CKT 1'	717	0.134	103.23	'G05-15T 345.00 - OKLAUNION 345KV CKT 1'
13WP	00NR	0	'FROM->TO'	G11_051	'CIMARRON - DRAPER LAKE 345KV CKT 1'	717	0.134	103.13	'G05-15T 345.00 - TUCO INTERCHANGE 345KV CKT 1'
13WP	00NR	0	'FROM->TO'	G11_051	'CIMARRON - DRAPER LAKE 345KV CKT 1'	717	0.134	103.37	'BLANCHARD - CORNVILLE 138KV CKT 1'
13WP	00NR	0	'FROM->TO'	G11_051	'CIMARRON - DRAPER LAKE 345KV CKT 1'	717	0.134	103.17	'BLANCHARD - MAUD 138KV CKT 1'
13WP	00NR	0	'FROM->TO'	G11_051	'CIMARRON - DRAPER LAKE 345KV CKT 1'	717	0.134	105.59	'NORTHWEST (NORTWST2) 345/138/13.8KV TRANSFORMER CKT 1'
13WP	00NR	0	'FROM->TO'	G11_051	'CIMARRON - DRAPER LAKE 345KV CKT 1'	717	0.134	103.87	'NORTHEAST STATION - ONETA 345KV CKT 1'
13WP	00NR	0	'FROM->TO'	G11_051	'CIMARRON - DRAPER LAKE 345KV CKT 1'	717	0.134	105.06	'ANADARKO - POCASSETT 138KV CKT 1'
13WP	00NR	0	'FROM->TO'	G11_051	'CIMARRON - DRAPER LAKE 345KV CKT 1'	717	0.134	104.88	'POCASSETT - TUTTLE 138KV CKT 1'
13WP	00NR	0	'FROM->TO'	G11_051	'CIMARRON - DRAPER LAKE 345KV CKT 1'	717	0.134	104.44	'SUNSHINE CANYON - TUTTLE 138KV CKT 1'
13WP	00NR	0	'FROM->TO'	G11_051	'CIMARRON - DRAPER LAKE 345KV CKT 1'	717	0.134	101.09	'BEAVER CO 345.00 - WOODWARD DISTRICT EHV 345KV CKT 1'
13WP	00NR	0	'FROM->TO'	G11_051	'CIMARRON - DRAPER LAKE 345KV CKT 1'	717	0.134	104.85	'NORTHWEST (NORTWST3) 345/138/13.8KV TRANSFORMER CKT 1'
13WP	00NR	0	'FROM->TO'	G11_051	'CIMARRON - DRAPER LAKE 345KV CKT 1'	717	0.134	103.36	'CLASSEN - ROBINSON 138KV CKT 1'
13WP	00NR	0	'FROM->TO'	G11_051	'CIMARRON - DRAPER LAKE 345KV CKT 1'	717	0.134	102.94	'LIGHTNING CREEK - ROBINSON 138KV CKT 1'
13WP	00NR	0	'FROM->TO'	G11_051	'CIMARRON - DRAPER LAKE 345KV CKT 1'	717	0.134	102.78	'LIGHTNING CREEK - TROSPER 138KV CKT 1'
13WP	00NR	0	'FROM->TO'	G11_051	'CIMARRON - DRAPER LAKE 345KV CKT 1'	717	0.134	103.82	'GRACEMONT - MINCO 345KV CKT 1'
13WP	00NR	0	'FROM->TO'	G11_051	'CIMARRON - DRAPER LAKE 345KV CKT 1'	717	0.134	103.28	'CIMARRON - MINCO 345KV CKT 1'
13WP	00NR	0	'FROM->TO'	G11_051	'CIMARRON - DRAPER LAKE 345KV CKT 1'	717	0.134	101.56	'DELAWARE - NORTHEAST STATION 345KV CKT 1'
13WP	00NR	0	'FROM->TO'	G11_051	'CIMARRON - DRAPER LAKE 345KV CKT 1'	717	0.134	103.31	'OGE3TERM20'
13WP	00NR	0	'FROM->TO'	G11_051	'CIMARRON - DRAPER LAKE 345KV CKT 1'	717	0.134	103.28	'KETCH TAP - NORTHWEST 138KV CKT 1'
13WP	00NR	0	'FROM->TO'	G11_051	'CIMARRON - DRAPER LAKE 345KV CKT 1'	717	0.134	103.58	'QUAIL CREEK - SKYLINE 138KV CKT 1'
13WP	00NR	0	'FROM->TO'	G11_051	'CIMARRON - DRAPER LAKE 345KV CKT 1'	717	0.134	103.30	'OGE3TERM11'
13WP	00NR	0	'FROM->TO'	G11_051	'CIMARRON - DRAPER LAKE 345KV CKT 1'	717	0.134	104.11	'HORSESHOE LAKE - JONES TAP 138KV CKT 1'
13WP	00NR	0	'FROM->TO'	G11_051	'CIMARRON - DRAPER LAKE 345KV CKT 1'	717	0.134	103.25	'MINGO - RED WILLOW 345KV CKT 1'
13WP	00NR	0	'FROM->TO'	G11_051	'CIMARRON - DRAPER LAKE 345KV CKT 1'	717	0.134	100.87	'OAKCREEK - WILD MARY 138KV CKT 1'
13WP	00NR	0	'FROM->TO'	G11_051	'CIMARRON - DRAPER LAKE 345KV CKT 1'	717	0.134	100.61	'AIRDEPT4 138.00 - WILD MARY 138KV CKT 1'
13WP	00NR	0	'FROM->TO'	G11_051	'CIMARRON - DRAPER LAKE 345KV CKT 1'	717	0.134	100.61	'AIRDEPT4 138.00 - GM 138KV CKT 1'
13WP	00NR	0	'FROM->TO'	G11_051	'CIMARRON - DRAPER LAKE 345KV CKT 1'	717	0.134	100.35	'DRAPER LAKE - GM 138KV CKT 1'
13WP	00NR	0	'FROM->TO'	G11_051	'CIMARRON - DRAPER LAKE 345KV CKT 1'	717	0.134	103.58	'CIMARRON - HAYMAKER 138KV CKT 1'

SEASON	GROUP	SCENARIO	DIRECTION	SOURCE	MONITORED ELEMENT	RATE B (MVA)	TDF	(%MVA) LOADING	CONTINGENCY
13WP	00NR	0	'FROM->TO'	G11_051	'CIMARRON - DRAPER LAKE 345KV CKT 1'	717	0.134	103.44	'DIVISION AVE - HAYMAKER 138KV CKT 1'
13WP	00NR	0	'FROM->TO'	G11_051	'CIMARRON - DRAPER LAKE 345KV CKT 1'	717	0.134	100.00	'CHAMBER SPRINGS - CLARKSVILLE 345KV CKT 1'
13WP	00NR	0	'FROM->TO'	G11_051	'CIMARRON - DRAPER LAKE 345KV CKT 1'	717	0.133	101.73	'MUSKOGEE - PECAN CREEK 345KV CKT 2'
13WP	00NR	0	'FROM->TO'	G11_051	'CIMARRON - DRAPER LAKE 345KV CKT 1'	717	0.133	104.83	'REDBUD - RIVERSIDE STATION 345KV CKT 1'
13WP	00NR	0	'FROM->TO'	G11_051	'CIMARRON - DRAPER LAKE 345KV CKT 1'	717	0.133	103.26	'TULSA NORTH - WEKIWA 345KV CKT 1'
13WP	00NR	0	'FROM->TO'	G11_051	'CIMARRON - DRAPER LAKE 345KV CKT 1'	717	0.133	102.69	'SAPULPA ROAD - WEKIWA 345KV CKT 1'
13WP	00NR	0	'FROM->TO'	G11_051	'CIMARRON - DRAPER LAKE 345KV CKT 1'	717	0.133	101.69	'FOREST HILL - SQUIRL CREEK 138KV CKT 1'
13WP	00NR	0	'FROM->TO'	G11_051	'CIMARRON - DRAPER LAKE 345KV CKT 1'	717	0.133	101.36	'FOREST HILL - MAUD 138KV CKT 1'
13WP	00NR	0	'FROM->TO'	G11_051	'CIMARRON - DRAPER LAKE 345KV CKT 1'	717	0.133	101.50	'DBL-HTCH-BVR'
13WP	00NR	0	'FROM->TO'	G11_051	'CIMARRON - DRAPER LAKE 345KV CKT 1'	717	0.133	103.09	'THISTLE 7 345.00 - WICHITA 345KV CKT 1'
13WP	00NR	0	'FROM->TO'	G11_051	'CIMARRON - DRAPER LAKE 345KV CKT 1'	717	0.133	103.09	'THISTLE 7 345.00 - WICHITA 345KV CKT 2'
13WP	00NR	0	'FROM->TO'	G11_051	'CIMARRON - DRAPER LAKE 345KV CKT 1'	717	0.133	103.22	'MINGO - SETAB 345KV CKT 1'
13WP	00NR	0	'FROM->TO'	G11_051	'CIMARRON - DRAPER LAKE 345KV CKT 1'	717	0.133	103.55	'LACYGNE - NEOSHO 345KV CKT 1'
13WP	00NR	0	'FROM->TO'	G11_051	'CIMARRON - DRAPER LAKE 345KV CKT 1'	717	0.133	103.53	'MEMORIAL - SKYLINE 138KV CKT 1'
13WP	00NR	0	'FROM->TO'	G11_051	'CIMARRON - DRAPER LAKE 345KV CKT 1'	717	0.133	101.74	'BORDER 7345.00 - WOODWARD DISTRICT EHV 345KV CKT 1'
13WP	00NR	0	'FROM->TO'	G11_051	'CIMARRON - DRAPER LAKE 345KV CKT 1'	717	0.133	101.64	'PENNSYLVANIA - WESTMOORE 138KV CKT 1'
13WP	00NR	0	'FROM->TO'	G11_051	'CIMARRON - DRAPER LAKE 345KV CKT 1'	717	0.133	101.46	'WESTMOORE - WILROGR4 138KV CKT 1'
13WP	00NR	0	'FROM->TO'	G11_051	'CIMARRON - DRAPER LAKE 345KV CKT 1'	717	0.133	101.19	'MAUD - SEMINOLE 138KV CKT 1'
13WP	00NR	0	'FROM->TO'	G11_051	'CIMARRON - DRAPER LAKE 345KV CKT 1'	717	0.133	102.68	'DBL-FINY-HOL'
13WP	00NR	0	'FROM->TO'	G11_051	'CIMARRON - DRAPER LAKE 345KV CKT 1'	717	0.133	103.93	'AXTELL - POST ROCK 345KV CKT 1'
13WP	00NR	0	'FROM->TO'	G11_051	'CIMARRON - DRAPER LAKE 345KV CKT 1'	717	0.133	100.76	'FT SMITH - MUSKOGEE 345KV CKT 1'
13WP	00NR	0	'FROM->TO'	G11_051	'CIMARRON - DRAPER LAKE 345KV CKT 1'	717	0.133	102.95	'MARSHALL - WOODRING 138KV CKT 1'
13WP	00NR	0	'FROM->TO'	G11_051	'CIMARRON - DRAPER LAKE 345KV CKT 1'	717	0.133	102.95	'COTTONWOOD CREEK - MARSHALL 138KV CKT 1'
13WP	00NR	0	'FROM->TO'	G11_051	'CIMARRON - DRAPER LAKE 345KV CKT 1'	717	0.133	102.88	'HOLCOMB - SETAB 345KV CKT 1'
13WP	00NR	0	'FROM->TO'	G11_051	'CIMARRON - DRAPER LAKE 345KV CKT 1'	717	0.133	101.73	'ARCADIA - OMPA-EDMOND AIR DEPOT (PLANNED 2007) 138KV CKT 1'
13WP	00NR	0	'FROM->TO'	G11_051	'CIMARRON - DRAPER LAKE 345KV CKT 1'	717	0.133	102.84	'DAYTON - MUSTANG 138KV CKT 1'
13WP	00NR	0	'FROM->TO'	G11_051	'CIMARRON - DRAPER LAKE 345KV CKT 1'	717	0.133	102.83	'DAYTON - HOBBY LOBBY 138KV CKT 1'
13WP	00NR	0	'FROM->TO'	G11_051	'CIMARRON - DRAPER LAKE 345KV CKT 1'	717	0.133	102.78	'36 & MERIDIAN - HOBBY LOBBY 138KV CKT 1'
13WP	00NR	0	'FROM->TO'	G11_051	'CIMARRON - DRAPER LAKE 345KV CKT 1'	717	0.133	103.21	'DIVISION AVE - LAKESIDE 138KV CKT 1'
13WP	00NR	0	'FROM->TO'	G11_051	'CIMARRON - DRAPER LAKE 345KV CKT 1'	717	0.133	103.08	'HEFNER - LAKESIDE 138KV CKT 1'
13WP	00NR	0	'FROM->TO'	G11_051	'CIMARRON - DRAPER LAKE 345KV CKT 1'	717	0.133	101.76	'Hitchland Interchange - WOODWARD DISTRICT EHV 345KV CKT 2'
13WP	00NR	0	'FROM->TO'	G11_051	'CIMARRON - DRAPER LAKE 345KV CKT 1'	717	0.133	101.55	'DISCVRY - FOSTER 138KV CKT 1'
13WP	00NR	0	'FROM->TO'	G11_051	'CIMARRON - DRAPER LAKE 345KV CKT 1'	717	0.133	101.38	'DISCVRY - OAKCREEK 138KV CKT 1'
13WP	00NR	0	'FROM->TO'	G11_051	'CIMARRON - DRAPER LAKE 345KV CKT 1'	717	0.133	103.35	'EMPORIA ENERGY CENTER - WICHITA 345KV CKT 1'
13WP	00NR	0	'FROM->TO'	G11_051	'CIMARRON - DRAPER LAKE 345KV CKT 1'	717	0.133	103.74	'G11-17T 345.00 - POST ROCK 345KV CKT 1'
13WP	00NR	0	'FROM->TO'	G11_051	'CIMARRON - DRAPER LAKE 345KV CKT 1'	717	0.133	103.04	'KETCH - KETCH TAP 138KV CKT 1'
13WP	00NR	0	'FROM->TO'	G11_051	'CIMARRON - DRAPER LAKE 345KV CKT 1'	717	0.133	102.98	'CIVIT - PAOLI 138KV CKT 1'
13WP	00NR	0	'FROM->TO'	G11_051	'CIMARRON - DRAPER LAKE 345KV CKT 1'	717	0.133	102.93	'CIVIT - STRATFORD 138KV CKT 1'
13WP	00NR	0	'FROM->TO'	G11_051	'CIMARRON - DRAPER LAKE 345KV CKT 1'	717	0.133	102.87	'OIL CENTER - STRATFORD 138KV CKT 1'
13WP	00NR	0	'FROM->TO'	G11_051	'CIMARRON - DRAPER LAKE 345KV CKT 1'	717	0.133	102.80	'LATTA JCT - OIL CENTER 138KV CKT 1'
13WP	00NR	0	'FROM->TO'	G11_051	'CIMARRON - DRAPER LAKE 345KV CKT 1'	717	0.133	103.62	'BLACKBERRY - NEOSHO 345KV CKT 1'
13WP	00NR	0	'FROM->TO'	G11_051	'CIMARRON - DRAPER LAKE 345KV CKT 1'	717	0.133	103.54	'CORN TAP - PAOLI 138KV CKT 1'
13WP	00NR	0	'FROM->TO'	G11_051	'CIMARRON - DRAPER LAKE 345KV CKT 1'	717	0.133	101.56	'OGE3TERM33'
13WP	00NR	0	'FROM->TO'	G11_051	'CIMARRON - DRAPER LAKE 345KV CKT 1'	717	0.133	103.26	'SWISSVALE - WEST GARDNER 345KV CKT 1'
13WP	00NR	0	'FROM->TO'	G11_051	'CIMARRON - DRAPER LAKE 345KV CKT 1'	717	0.133	105.38	'ANDERSONCO 345.00 - LACYGNE 345KV CKT 1'
13WP	00NR	0	'FROM->TO'	G11_051	'CIMARRON - DRAPER LAKE 345KV CKT 1'	717	0.133	105.27	'ANDERSONCO 345.00 - WOLF CREEK 345KV CKT 1'
13WP	00NR	0	'FROM->TO'	G11_051	'CIMARRON - DRAPER LAKE 345KV CKT 1'	717	0.133	103.64	'HUGO - SUNNYSIDE 345KV CKT 1'
13WP	00NR	0	'FROM->TO'	G11_051	'CIMARRON - DRAPER LAKE 345KV CKT 1'	717	0.133	103.25	'DBL-CIR-RENO'
13WP	00NR	0	'FROM->TO'	G11_051	'CIMARRON - DRAPER LAKE 345KV CKT 1'	717	0.133	103.24	'DBL-MULG-CIR'
13WP	00NR	0	'FROM->TO'	G11_051	'CIMARRON - DRAPER LAKE 345KV CKT 1'	717	0.133	103.21	'DBL-SPRVL-MU'
13WP	00NR	0	'FROM->TO'	G11_051	'CIMARRON - DRAPER LAKE 345KV CKT 1'	717	0.133	100.09	'FRANKLIN SW - MIDWEST TAP 138KV CKT 1'
13WP	00NR	0	'FROM->TO'	G11_051	'CIMARRON - DRAPER LAKE 345KV CKT 1'	717	0.133	101.19	'PARK LANE - SEMINOLE 138KV CKT 1'
13WP	00NR	0	'FROM->TO'	G11_051	'CIMARRON - DRAPER LAKE 345KV CKT 1'	717	0.133	103.18	'OVERTON-TRF'
13WP	00NR	0	'FROM->TO'	G11_051	'CIMARRON - DRAPER LAKE 345KV CKT 1'	717	0.133	101.71	'ARBUCKLE - VANOSS 138KV CKT 1'
13WP	00NR	0	'FROM->TO'	G11_051	'CIMARRON - DRAPER LAKE 345KV CKT 1'	717	0.133	103.25	'7OVERTON 345.00 - SIBLEY 345KV CKT 1'
13WP	00NR	0	'FROM->TO'	G11_051	'CIMARRON - DRAPER LAKE 345KV CKT 1'	717	0.133	103.08	'LONEOAK - NORTHWEST 138KV CKT 1'
13WP	00NR	0	'FROM->TO'	G11_051	'CIMARRON - DRAPER LAKE 345KV CKT 1'	717	0.133	102.94	'LONEOAK - QUAIL CREEK 138KV CKT 1'
13WP	00NR	0	'FROM->TO'	G11_051	'CIMARRON - DRAPER LAKE 345KV CKT 1'	717	0.133	102.94	'DIVISION AVE - MUSTANG 138KV CKT 1'
13WP	00NR	0	'FROM->TO'	G11_051	'CIMARRON - DRAPER LAKE 345KV CKT 1'	717	0.133	102.75	'PENNSYLVANIA - SANTA FE 138KV CKT 1'
13WP	00NR	0	'FROM->TO'	G11_051	'CIMARRON - DRAPER LAKE 345KV CKT 1'	717	0.133	102.91	'HAMMETT TAP - HORSESHOE LAKE 138KV CKT 1'
13WP	00NR	0	'FROM->TO'	G11_051	'CIMARRON - DRAPER LAKE 345KV CKT 1'	717	0.133	103.73	'WRTOD400'
13WP	00NR	0	'FROM->TO'	G11_051	'CIMARRON - DRAPER LAKE 345KV CKT 1'	717	0.133	102.99	'EMPORIA ENERGY CENTER - SWISSVALE 345KV CKT 1'
13WP	00NR	0	'FROM->TO'	G11_051	'CIMARRON - DRAPER LAKE 345KV CKT 1'	717	0.133	102.75	'HEALDTON - LOCO 138KV CKT 1'
13WP	00NR	0	'FROM->TO'	G11_051	'CIMARRON - DRAPER LAKE 345KV CKT 1'	717	0.133	102.74	'EL RENO SW - MUSTANG 69KV CKT 1'
13WP	00NR	0	'FROM->TO'	G11_051	'CIMARRON - DRAPER LAKE 345KV CKT 1'	717	0.133	103.44	'HOYT - STRANGER CREEK 345KV CKT 1'
13WP	00NR	0	'FROM->TO'	G11_051	'CIMARRON - DRAPER LAKE 345KV CKT 1'	717	0.133	102.74	'ANADARKO - BLANCHARD 69KV CKT 1'
13WP	00NR	0	'FROM->TO'	G11_051	'CIMARRON - DRAPER LAKE 345KV CKT 1'	717	0.133	103.64	'HOYT - JEFFREY ENERGY CENTER 345KV CKT 1'
13WP	00NR	0	'FROM->TO'	G11_051	'CIMARRON - DRAPER LAKE 345KV CKT 1'	717	0.133	102.82	'RENO COUNTY - SUMMIT 345KV CKT 1'
13WP	00NR	0	'FROM->TO'	G11_051	'CIMARRON - DRAPER LAKE 345KV CKT 1'	717	0.133	102.69	'5LOCSTGV - MAID 161KV CKT 1'
13WP	00NR	0	'FROM->TO'	G11_051	'CIMARRON - DRAPER LAKE 345KV CKT 1'	717	0.133	102.68	'5CDRCRST 161.00 - 5LOCSTGV 161KV CKT 1'
13WP	00NR	0	'FROM->TO'	G11_051	'CIMARRON - DRAPER LAKE 345KV CKT 1'	717	0.133	104.10	'OGE3TERM14'
13WP	00NR	0	'FROM->TO'	G11_051	'CIMARRON - DRAPER LAKE 345KV CKT 1'	717	0.133	103.02	'COMANCHE - LOCO 138KV CKT 1'
13WP	00NR	0	'FROM->TO'	G11_051	'CIMARRON - DRAPER LAKE 345KV CKT 1'	717	0.133	102.96	'NORTHWEST - PANTHER 138KV CKT 1'
13WP	00NR	0	'FROM->TO'	G11_051	'CIMARRON - DRAPER LAKE 345KV CKT 1'	717	0.133	102.92	'PANTHER - SILVER LAKE 138KV CKT 1'
13WP	00NR	0	'FROM->TO'	G11_051	'CIMARRON - DRAPER LAKE 345KV CKT 1'	717	0.133	102.75	'OUMED 4 - STONEWALL 138KV CKT 1'
13WP	00NR	0	'FROM->TO'	G11_051	'CIMARRON - DRAPER LAKE 345KV CKT 1'	717	0.133	102.74	'OUMED 4 - PARK PLACE 138KV CKT 1'
13WP	00NR	0	'FROM->TO'	G11_051	'CIMARRON - DRAPER LAKE 345KV CKT 1'	717	0.133	101.73	'SEMINOLE - VANOSS 138KV CKT 1'
13WP	00NR	0	'FROM->TO'	G11_051	'CIMARRON - DRAPER LAKE 345KV CKT 1'	717	0.133	103.33	'OGE3TERM17'

SEASON	GROUP	SCENARIO	DIRECTION	SOURCE	MONITORED ELEMENT	RATE B (MVA)	TDF	(%MVA) LOADING	CONTINGENCY
13WP	00NR	0	'FROM->TO'	G11_051	'CIMARRON - DRAPER LAKE 345KV CKT 1'	717	0.133	103.23	'HUGO - VALLIANT 345KV CKT 1'
13WP	00NR	0	'FROM->TO'	G11_051	'CIMARRON - DRAPER LAKE 345KV CKT 1'	717	0.133	102.96	'AXTELL - PAULINE 345KV CKT 1'
13WP	00NR	0	'FROM->TO'	G11_051	'CIMARRON - DRAPER LAKE 345KV CKT 1'	717	0.133	102.59	'COUNCIL - MUSTANG 138KV CKT 1'
13WP	00NR	0	'FROM->TO'	G11_051	'CIMARRON - DRAPER LAKE 345KV CKT 1'	717	0.133	101.40	'KEO EHV - WEST MEMPHIS 500 500KV CKT 1'
13WP	00NR	0	'FROM->TO'	G11_051	'CIMARRON - DRAPER LAKE 345KV CKT 1'	717	0.133	103.02	'CLEVELAND (CLVAUTO1) 345/138/13.8KV TRANSFORMER CKT 1'
13WP	00NR	0	'FROM->TO'	G11_051	'CIMARRON - DRAPER LAKE 345KV CKT 1'	717	0.133	103.01	'GRAND ISLAND - SWEETWATER 345KV CKT 1'
13WP	00NR	0	'FROM->TO'	G11_051	'CIMARRON - DRAPER LAKE 345KV CKT 1'	717	0.133	101.57	'DBL-CLRK-G11'
13WP	00NR	0	'FROM->TO'	G11_051	'CIMARRON - DRAPER LAKE 345KV CKT 1'	717	0.133	101.14	'DBL-THIS-CLR'
13WP	00NR	0	'FROM->TO'	G11_051	'CIMARRON - DRAPER LAKE 345KV CKT 1'	717	0.133	102.83	'MOORE - PAULINE 345KV CKT 1'
13WP	00NR	0	'FROM->TO'	G11_051	'CIMARRON - DRAPER LAKE 345KV CKT 1'	717	0.133	102.98	'OGE3TERM13'
13WP	00NR	0	'FROM->TO'	G11_051	'CIMARRON - DRAPER LAKE 345KV CKT 1'	717	0.133	102.54	'HEFNER - TULSA 138KV CKT 1'
13WP	00NR	0	'FROM->TO'	G11_051	'CIMARRON - DRAPER LAKE 345KV CKT 1'	717	0.133	101.72	'8BHAM STEEL 500.00 - WEST MEMPHIS 500 500KV CKT 1'
13WP	00NR	0	'FROM->TO'	G11_051	'CIMARRON - DRAPER LAKE 345KV CKT 1'	717	0.133	101.71	'AMRN_OUTS5'
13WP	00NR	0	'FROM->TO'	G11_051	'CIMARRON - DRAPER LAKE 345KV CKT 1'	717	0.133	101.58	'CANADIAN RIVER - MCALESTER SOUTH 138KV CKT 1'
13WP	00NR	0	'FROM->TO'	G11_051	'CIMARRON - DRAPER LAKE 345KV CKT 1'	717	0.133	101.57	'CANADIAN RIVER () 345/138/13.8KV TRANSFORMER CKT 1'
13WP	00NR	0	'FROM->TO'	G11_051	'CIMARRON - DRAPER LAKE 345KV CKT 1'	717	0.133	101.38	'DELL 500 - INDEPENDENCE 500KV CKT 1'
13WP	00NR	0	'FROM->TO'	G11_051	'CIMARRON - DRAPER LAKE 345KV CKT 1'	717	0.133	102.91	'ANADARKO - GEORGIA 138KV CKT 1'
13WP	00NR	0	'FROM->TO'	G11_051	'CIMARRON - DRAPER LAKE 345KV CKT 1'	717	0.133	102.87	'FLETCHER - GEORGIA 138KV CKT 1'
13WP	00NR	0	'FROM->TO'	G11_051	'CIMARRON - DRAPER LAKE 345KV CKT 1'	717	0.133	102.73	'EMPIRE - FLETCHER 138KV CKT 1'
13WP	00NR	0	'FROM->TO'	G11_051	'CIMARRON - DRAPER LAKE 345KV CKT 1'	717	0.133	102.68	'COMANCHE - EMPIRE 138KV CKT 1'
13WP	00NR	0	'FROM->TO'	G11_051	'CIMARRON - DRAPER LAKE 345KV CKT 1'	717	0.133	102.98	'GRACEMONT (BANK 1) 345/138/13.8KV TRANSFORMER CKT 1'
13WP	00NR	0	'FROM->TO'	G11_051	'CIMARRON - DRAPER LAKE 345KV CKT 1'	717	0.133	101.73	'OGE3TERM41'
13WP	00NR	0	'FROM->TO'	G11_051	'CIMARRON - DRAPER LAKE 345KV CKT 1'	717	0.133	101.68	'OSAGE - WEBB CITY TAP 138KV CKT 1'
13WP	00NR	0	'FROM->TO'	G11_051	'CIMARRON - DRAPER LAKE 345KV CKT 1'	717	0.133	101.64	'G11_040_TAP 138.00 - POOLEVILLE 138KV CKT 1'
13WP	00NR	0	'FROM->TO'	G11_051	'CIMARRON - DRAPER LAKE 345KV CKT 1'	717	0.133	101.56	'HOLLYWOOD - MIDWEST TAP 138KV CKT 1'
13WP	00NR	0	'FROM->TO'	G11_051	'CIMARRON - DRAPER LAKE 345KV CKT 1'	717	0.133	101.50	'FAIRFAX TAP - WEBB CITY TAP 138KV CKT 1'
13WP	00NR	0	'FROM->TO'	G11_051	'CIMARRON - DRAPER LAKE 345KV CKT 1'	717	0.133	103.08	'OGE3TERM19'
13WP	00NR	0	'FROM->TO'	G11_051	'CIMARRON - DRAPER LAKE 345KV CKT 1'	717	0.133	102.95	'HAMMETT TAP - HAMMETT2 138KV CKT 1'
13WP	00NR	0	'FROM->TO'	G11_051	'CIMARRON - DRAPER LAKE 345KV CKT 1'	717	0.133	102.94	'AI43'
13WP	00NR	0	'FROM->TO'	G11_051	'CIMARRON - DRAPER LAKE 345KV CKT 1'	717	0.133	102.93	'7LUTESVIL 345.00 - 7ST FRANC 345.00 345KV CKT 1'
13WP	00NR	0	'FROM->TO'	G11_051	'CIMARRON - DRAPER LAKE 345KV CKT 1'	717	0.133	102.87	'CLINTON - MONTROSE 161KV CKT 1'
13WP	00NR	0	'FROM->TO'	G11_051	'CIMARRON - DRAPER LAKE 345KV CKT 1'	717	0.133	102.83	'HAMMETT2 - MEEKER 138KV CKT 1'
13WP	00NR	0	'FROM->TO'	G11_051	'CIMARRON - DRAPER LAKE 345KV CKT 1'	717	0.133	101.71	'ARKANSAS NUCLEAR ONE - PLEASANT HILL 500KV CKT 1'
13WP	00NR	0	'FROM->TO'	G11_051	'CIMARRON - DRAPER LAKE 345KV CKT 1'	717	0.133	100.96	'DRAPER LAKE - SOONER TAP 138KV CKT 1'
13WP	00NR	0	'FROM->TO'	G11_051	'CIMARRON - DRAPER LAKE 345KV CKT 1'	717	0.133	104.19	'OGE3TERM12'
13WP	00NR	0	'FROM->TO'	G11_051	'CIMARRON - DRAPER LAKE 345KV CKT 1'	717	0.133	102.70	'NEOSHO (NEOSHO2X) 345/161/13.8KV TRANSFORMER CKT 1'
13WP	00NR	0	'FROM->TO'	G11_051	'CIMARRON - DRAPER LAKE 345KV CKT 1'	717	0.133	101.57	'BAXTER WILSON SES - PERRYVILLE 500KV CKT 1'
13WP	00NR	0	'FROM->TO'	G11_051	'CIMARRON - DRAPER LAKE 345KV CKT 1'	717	0.133	100.95	'OGE3TERM22'
13WP	00NR	0	'FROM->TO'	G11_051	'CIMARRON - DRAPER LAKE 345KV CKT 1'	717	0.133	103.25	'FAIRFAX TAP - SHIDLER 138KV CKT 1'
13WP	00NR	0	'FROM->TO'	G11_051	'CIMARRON - DRAPER LAKE 345KV CKT 1'	717	0.133	103.21	'SHIDLER - WEST PAWHUSKA 138KV CKT 1'
13WP	00NR	0	'FROM->TO'	G11_051	'CIMARRON - DRAPER LAKE 345KV CKT 1'	717	0.133	103.21	'PAWHUSKA TAP - WEST PAWHUSKA 138KV CKT 1'
13WP	00NR	0	'FROM->TO'	G11_051	'CIMARRON - DRAPER LAKE 345KV CKT 1'	717	0.133	103.16	'DOMES - PAWHUSKA TAP 138KV CKT 1'
13WP	00NR	0	'FROM->TO'	G11_051	'CIMARRON - DRAPER LAKE 345KV CKT 1'	717	0.133	103.13	'DOMES - MOUND ROAD 138KV CKT 1'
13WP	00NR	0	'FROM->TO'	G11_051	'CIMARRON - DRAPER LAKE 345KV CKT 1'	717	0.133	102.83	'OGE3TERM28'
13WP	00NR	0	'FROM->TO'	G11_051	'CIMARRON - DRAPER LAKE 345KV CKT 1'	717	0.133	102.73	'LAKEOVER - MCADAMS 500KV CKT 1'
13WP	00NR	0	'FROM->TO'	G11_051	'CIMARRON - DRAPER LAKE 345KV CKT 1'	717	0.133	101.77	'ROSE HILL - WOLF CREEK 345KV CKT 1'
13WP	00NR	0	'FROM->TO'	G11_051	'CIMARRON - DRAPER LAKE 345KV CKT 1'	717	0.133	102.98	'7JASPER 345.00 - MORGAN 345KV CKT 1'
13WP	00NR	0	'FROM->TO'	G11_051	'CIMARRON - DRAPER LAKE 345KV CKT 1'	717	0.133	102.93	'WEBRE - WELLS 500KV CKT 1'
13WP	00NR	0	'FROM->TO'	G11_051	'CIMARRON - DRAPER LAKE 345KV CKT 1'	717	0.133	102.79	'ATCHSNT3 345.00 - BOONEVILLE 345KV CKT 1'
13WP	00NR	0	'FROM->TO'	G11_051	'CIMARRON - DRAPER LAKE 345KV CKT 1'	717	0.133	102.72	'ATCHSNT3 345.00 - COOPER 345KV CKT 1'
13WP	00NR	0	'FROM->TO'	G11_051	'CIMARRON - DRAPER LAKE 345KV CKT 1'	717	0.132	103.14	'8DANIEL 500.00 - MCKNIGHT 500KV CKT 1'
13WP	00NR	0	'FROM->TO'	G11_051	'CIMARRON - DRAPER LAKE 345KV CKT 1'	717	0.132	102.81	'CHERRY CREEK - PLEASANT VALLEY 138KV CKT 1'
13WP	00NR	0	'FROM->TO'	G11_051	'CIMARRON - DRAPER LAKE 345KV CKT 1'	717	0.132	102.74	'SHERIDAN EHV - WHITE BLUFF 500KV CKT 1'
13WP	00NR	0	'FROM->TO'	G11_051	'CIMARRON - DRAPER LAKE 345KV CKT 1'	717	0.132	102.68	'BOYD - CHERRY CREEK 138KV CKT 1'
13WP	00NR	0	'FROM->TO'	G11_051	'CIMARRON - DRAPER LAKE 345KV CKT 1'	717	0.132	101.71	'BAXTER WILSON SES - RAY BRASWELL SES 500KV CKT 1'
13WP	00NR	0	'FROM->TO'	G11_051	'CIMARRON - DRAPER LAKE 345KV CKT 1'	717	0.132	103.03	'DOLET HILLS - SOUTHWEST SHREVEPORT 345KV CKT 1'
13WP	00NR	0	'FROM->TO'	G11_051	'CIMARRON - DRAPER LAKE 345KV CKT 1'	717	0.132	101.77	'CROCKETT - GRIMES 345KV CKT 1'
13WP	00NR	0	'FROM->TO'	G11_051	'CIMARRON - DRAPER LAKE 345KV CKT 1'	717	0.132	101.69	'NELSON - RICHARD 500KV CKT 1'
13WP	00NR	0	'FROM->TO'	G11_051	'CIMARRON - DRAPER LAKE 345KV CKT 1'	717	0.132	101.43	'DOLET HILLS 345/230KV TRANSFORMER CKT 1'
13WP	00NR	0	'FROM->TO'	G11_051	'CIMARRON - DRAPER LAKE 345KV CKT 1'	717	0.132	103.98	'OGE3TERM47'
13WP	00NR	0	'FROM->TO'	G11_051	'CIMARRON - DRAPER LAKE 345KV CKT 1'	717	0.132	102.98	'OGE3TERM3'
13WP	00NR	0	'FROM->TO'	G11_051	'CIMARRON - DRAPER LAKE 345KV CKT 1'	717	0.132	102.95	'GRDA-OPGD-05'
13WP	00NR	0	'FROM->TO'	G11_051	'CIMARRON - DRAPER LAKE 345KV CKT 1'	717	0.132	102.70	'CELE-WELLOP1'
13WP	00NR	0	'FROM->TO'	G11_051	'CIMARRON - DRAPER LAKE 345KV CKT 1'	717	0.132	101.63	'LEBROCK - TENASKA RUSK COUNTY 345KV CKT 1'
13WP	00NR	0	'FROM->TO'	G11_051	'CIMARRON - DRAPER LAKE 345KV CKT 1'	717	0.132	101.63	'CROCKETT - TENASKA RUSK COUNTY 345KV CKT 1'
13WP	00NR	0	'FROM->TO'	G11_051	'CIMARRON - DRAPER LAKE 345KV CKT 1'	717	0.132	110.45	'GEN336821 1-GRAND GULF UNIT'
13WP	00NR	0	'FROM->TO'	G11_051	'CIMARRON - DRAPER LAKE 345KV CKT 1'	717	0.132	110.25	'GEN336153 1-WATERFORD UNIT#3'
13WP	00NR	0	'FROM->TO'	G11_051	'CIMARRON - DRAPER LAKE 345KV CKT 1'	717	0.132	109.19	'GEN337911 1-ARKANSAS NUCLEAR ONE UNIT #2'
13WP	00NR	0	'FROM->TO'	G11_051	'CIMARRON - DRAPER LAKE 345KV CKT 1'	717	0.132	109.13	'GEN335831 1-RIVERBEND UNIT#1'
13WP	00NR	0	'FROM->TO'	G11_051	'CIMARRON - DRAPER LAKE 345KV CKT 1'	717	0.132	108.27	'GEN501801 1-DOLET HILLS UNIT1'
13WP	00NR	0	'FROM->TO'	G11_051	'CIMARRON - DRAPER LAKE 345KV CKT 1'	717	0.132	108.02	'GEN337910 1-ARKANSAS NUCLEAR ONE UNIT #1'
13WP	00NR	0	'FROM->TO'	G11_051	'CIMARRON - DRAPER LAKE 345KV CKT 1'	717	0.132	107.77	'GEN520947 1-HUGO1'
13WP	00NR	0	'FROM->TO'	G11_051	'CIMARRON - DRAPER LAKE 345KV CKT 1'	717	0.132	107.17	'GEN337652 1-WHITE BLUFF UNIT #1'
13WP	00NR	0	'FROM->TO'	G11_051	'CIMARRON - DRAPER LAKE 345KV CKT 1'	717	0.132	106.95	'GEN509416 1-TURK GENERATION'
13WP	00NR	0	'FROM->TO'	G11_051	'CIMARRON - DRAPER LAKE 345KV CKT 1'	717	0.132	106.94	'GEN509403 1-PIRKEY GENERATION'
13WP	00NR	0	'FROM->TO'	G11_051	'CIMARRON - DRAPER LAKE 345KV CKT 1'	717	0.132	106.90	'GEN515042 1-SEMINOLE 3G'
13WP	00NR	0	'FROM->TO'	G11_051	'CIMARRON - DRAPER LAKE 345KV CKT 1'	717	0.132	106.82	'GEN337653 1-WHITE BLUFF UNIT #2'
13WP	00NR	0	'FROM->TO'	G11_051	'CIMARRON - DRAPER LAKE 345KV CKT 1'	717	0.132	106.75	'GEN336251 1-NINEMILE POINT UNIT#4'

SEASON	GROUP	SCENARIO	DIRECTION	SOURCE	MONITORED ELEMENT	RATE B (MVA)	TDF	(%MVA) LOADING	CONTINGENCY
13WP	00NR	0	'FROM->TO'	G11_051	'CIMARRON - DRAPER LAKE 345KV CKT 1'	717	0.132	106.70	'GEN515040 1-SEMINOLE 1G'
13WP	00NR	0	'FROM->TO'	G11_051	'CIMARRON - DRAPER LAKE 345KV CKT 1'	717	0.132	106.61	'GEN501813 1-RODEMACHER UNIT 3'
13WP	00NR	0	'FROM->TO'	G11_051	'CIMARRON - DRAPER LAKE 345KV CKT 1'	717	0.132	106.60	'GEN338146 1-INDEPENDENCE UNIT #2'
13WP	00NR	0	'FROM->TO'	G11_051	'CIMARRON - DRAPER LAKE 345KV CKT 1'	717	0.132	106.44	'GEN337041 1-GERALD ANDRUS'
13WP	00NR	0	'FROM->TO'	G11_051	'CIMARRON - DRAPER LAKE 345KV CKT 1'	717	0.132	106.43	'GEN338143 1-INDEPENDENCE UNIT #1'
13WP	00NR	0	'FROM->TO'	G11_051	'CIMARRON - DRAPER LAKE 345KV CKT 1'	717	0.132	106.30	'GEN515041 1-SEMINOLE 2G'
13WP	00NR	0	'FROM->TO'	G11_051	'CIMARRON - DRAPER LAKE 345KV CKT 1'	717	0.132	106.03	'GEN509406 1-WELSH #3'
13WP	00NR	0	'FROM->TO'	G11_051	'CIMARRON - DRAPER LAKE 345KV CKT 1'	717	0.132	106.03	'GEN509405 1-WELSH #2'
13WP	00NR	0	'FROM->TO'	G11_051	'CIMARRON - DRAPER LAKE 345KV CKT 1'	717	0.132	106.03	'GEN509404 1-WELSH #1'
13WP	00NR	0	'FROM->TO'	G11_051	'CIMARRON - DRAPER LAKE 345KV CKT 1'	717	0.132	106.02	'GEN334440 1-SABINE UNIT 4'
13WP	00NR	0	'FROM->TO'	G11_051	'CIMARRON - DRAPER LAKE 345KV CKT 1'	717	0.132	106.02	'GEN501812 1-RODEMACHER UNIT 2'
13WP	00NR	0	'FROM->TO'	G11_051	'CIMARRON - DRAPER LAKE 345KV CKT 1'	717	0.132	105.89	'GEN335206 1-NELSON UNIT 6'
13WP	00NR	0	'FROM->TO'	G11_051	'CIMARRON - DRAPER LAKE 345KV CKT 1'	717	0.132	105.77	'GEN515226 1-MUSKOGEE 6G'
13WP	00NR	0	'FROM->TO'	G11_051	'CIMARRON - DRAPER LAKE 345KV CKT 1'	717	0.132	105.69	'GEN336831 1-BAXTER WILSON SES'
13WP	00NR	0	'FROM->TO'	G11_051	'CIMARRON - DRAPER LAKE 345KV CKT 1'	717	0.132	105.56	'GEN334441 1-SABINE UNIT 5'
13WP	00NR	0	'FROM->TO'	G11_051	'CIMARRON - DRAPER LAKE 345KV CKT 1'	717	0.132	105.40	'GEN338388 1-1PLUMPT 23.000'
13WP	00NR	0	'FROM->TO'	G11_051	'CIMARRON - DRAPER LAKE 345KV CKT 1'	717	0.132	105.29	'GEN515223 1-MUSKOGEE 4G'
13WP	00NR	0	'FROM->TO'	G11_051	'CIMARRON - DRAPER LAKE 345KV CKT 1'	717	0.132	105.25	'GEN335204 1-NELSON UNIT 4'
13WP	00NR	0	'FROM->TO'	G11_051	'CIMARRON - DRAPER LAKE 345KV CKT 1'	717	0.132	105.24	'GEN515225 1-MUSKOGEE 5G'
13WP	00NR	0	'FROM->TO'	G11_051	'CIMARRON - DRAPER LAKE 345KV CKT 1'	717	0.132	105.17	'GEN334433 1-SABINE UNIT 3'
13WP	00NR	0	'FROM->TO'	G11_051	'CIMARRON - DRAPER LAKE 345KV CKT 1'	717	0.132	105.15	'GEN336801 1-BAXTER WILSON UNIT #1'
13WP	00NR	0	'FROM->TO'	G11_051	'CIMARRON - DRAPER LAKE 345KV CKT 1'	717	0.132	104.07	'GEN336170 1-GULF OXY U4'
13WP	00NR	0	'FROM->TO'	G11_051	'CIMARRON - DRAPER LAKE 345KV CKT 1'	717	0.132	103.92	'GEN334070 1-LEWIS CREEK 1'
13WP	00NR	0	'FROM->TO'	G11_051	'CIMARRON - DRAPER LAKE 345KV CKT 1'	717	0.132	103.89	'GEN334071 1-LEWIS CREEK 2'
13WP	00NR	0	'FROM->TO'	G11_051	'CIMARRON - DRAPER LAKE 345KV CKT 1'	717	0.132	103.74	'GEN300006 1-NEW MADRID UNIT 1'
13WP	00NR	0	'FROM->TO'	G11_051	'CIMARRON - DRAPER LAKE 345KV CKT 1'	717	0.132	103.72	'GEN300007 1-NEW MADRID UNIT 2'
13WP	00NR	0	'FROM->TO'	G11_051	'CIMARRON - DRAPER LAKE 345KV CKT 1'	717	0.132	103.63	'GEN509391 G1-ARSENAL HILL GENS #2 (STALL)'
13WP	00NR	0	'FROM->TO'	G11_051	'CIMARRON - DRAPER LAKE 345KV CKT 1'	717	0.132	103.63	'GEN509392 G2-ARSENAL HILL GENS #3 (STALL)'
13WP	00NR	0	'FROM->TO'	G11_051	'CIMARRON - DRAPER LAKE 345KV CKT 1'	717	0.132	103.61	'GEN334432 1-SABINE UNIT 2'
13WP	00NR	0	'FROM->TO'	G11_051	'CIMARRON - DRAPER LAKE 345KV CKT 1'	717	0.132	103.56	'GEN334030 1-FRONTIER UNIT 1'
13WP	00NR	0	'FROM->TO'	G11_051	'CIMARRON - DRAPER LAKE 345KV CKT 1'	717	0.132	103.56	'GEN334031 1-FRONTIER UNIT 2'
13WP	00NR	0	'FROM->TO'	G11_051	'CIMARRON - DRAPER LAKE 345KV CKT 1'	717	0.132	103.55	'GEN509393 S1-ARSENAL HILL GENS #4 (STALL)'
13WP	00NR	0	'FROM->TO'	G11_051	'CIMARRON - DRAPER LAKE 345KV CKT 1'	717	0.132	103.54	'GEN334431 1-SABINE UNIT 1'
13WP	00NR	0	'FROM->TO'	G11_051	'CIMARRON - DRAPER LAKE 345KV CKT 1'	717	0.132	103.54	'GEN509394 1-FLINT CREEK'
13WP	00NR	0	'FROM->TO'	G11_051	'CIMARRON - DRAPER LAKE 345KV CKT 1'	717	0.132	103.51	'GEN514998 1-MCCLAIN UNIT 1'
13WP	00NR	0	'FROM->TO'	G11_051	'CIMARRON - DRAPER LAKE 345KV CKT 1'	717	0.132	103.51	'GEN503909 1-FULTONU1 1 16.000'
13WP	00NR	0	'FROM->TO'	G11_051	'CIMARRON - DRAPER LAKE 345KV CKT 1'	717	0.132	103.50	'GEN335612 1-WILLOW GLENN UNIT#2'
13WP	00NR	0	'FROM->TO'	G11_051	'CIMARRON - DRAPER LAKE 345KV CKT 1'	717	0.132	103.50	'GEN509408 1-WILKES #2'
13WP	00NR	0	'FROM->TO'	G11_051	'CIMARRON - DRAPER LAKE 345KV CKT 1'	717	0.132	103.45	'GEN511843 1-RIVERSIDE STATION #2'
13WP	00NR	0	'FROM->TO'	G11_051	'CIMARRON - DRAPER LAKE 345KV CKT 1'	717	0.132	103.42	'GEN506752 1-LEBROCK GAS 1'
13WP	00NR	0	'FROM->TO'	G11_051	'CIMARRON - DRAPER LAKE 345KV CKT 1'	717	0.132	103.42	'GEN337429 1-PERYVILLE UNIT #2'
13WP	00NR	0	'FROM->TO'	G11_051	'CIMARRON - DRAPER LAKE 345KV CKT 1'	717	0.132	103.42	'GEN337432 1-PERYVILLE UNIT #5'
13WP	00NR	0	'FROM->TO'	G11_051	'CIMARRON - DRAPER LAKE 345KV CKT 1'	717	0.132	103.37	'GEN337428 1-PERYVILLE UNIT #1'
13WP	00NR	0	'FROM->TO'	G11_051	'CIMARRON - DRAPER LAKE 345KV CKT 1'	717	0.132	103.37	'GEN337430 1-PERYVILLE UNIT #3'
13WP	00NR	0	'FROM->TO'	G11_051	'CIMARRON - DRAPER LAKE 345KV CKT 1'	717	0.132	103.37	'GEN335075 1-DYNEGY#1'
13WP	00NR	0	'FROM->TO'	G11_051	'CIMARRON - DRAPER LAKE 345KV CKT 1'	717	0.132	103.35	'GEN335203 1-NELSON UNIT 3'
13WP	00NR	0	'FROM->TO'	G11_051	'CIMARRON - DRAPER LAKE 345KV CKT 1'	717	0.132	103.35	'GEN336167 1-GULF OXY U1'
13WP	00NR	0	'FROM->TO'	G11_051	'CIMARRON - DRAPER LAKE 345KV CKT 1'	717	0.132	103.35	'GEN336168 1-GULF OXY U2'
13WP	00NR	0	'FROM->TO'	G11_051	'CIMARRON - DRAPER LAKE 345KV CKT 1'	717	0.132	103.35	'GEN336169 1-GULF OXY U3'
13WP	00NR	0	'FROM->TO'	G11_051	'CIMARRON - DRAPER LAKE 345KV CKT 1'	717	0.132	103.34	'GEN318007 1-5MOROW161 161.00'
13WP	00NR	0	'FROM->TO'	G11_051	'CIMARRON - DRAPER LAKE 345KV CKT 1'	717	0.132	103.31	'GEN337421 1-OUCHITA CTG1'
13WP	00NR	0	'FROM->TO'	G11_051	'CIMARRON - DRAPER LAKE 345KV CKT 1'	717	0.132	103.31	'GEN337423 1-OUCHITA CTG2'
13WP	00NR	0	'FROM->TO'	G11_051	'CIMARRON - DRAPER LAKE 345KV CKT 1'	717	0.132	103.31	'GEN337425 1-OUCHITA CTG3'
13WP	00NR	0	'FROM->TO'	G11_051	'CIMARRON - DRAPER LAKE 345KV CKT 1'	717	0.132	103.31	'GEN512688 2-GRDA1 GSU2 22'
13WP	00NR	0	'FROM->TO'	G11_051	'CIMARRON - DRAPER LAKE 345KV CKT 1'	717	0.132	103.29	'GEN334392 1-EXXON MOBIL IPP 1'
13WP	00NR	0	'FROM->TO'	G11_051	'CIMARRON - DRAPER LAKE 345KV CKT 1'	717	0.132	103.22	'GEN337006 1-DUKE MCADAMS G1'
13WP	00NR	0	'FROM->TO'	G11_051	'CIMARRON - DRAPER LAKE 345KV CKT 1'	717	0.132	103.22	'GEN337007 1-DUKE MCADAMS G2'
13WP	00NR	0	'FROM->TO'	G11_051	'CIMARRON - DRAPER LAKE 345KV CKT 1'	717	0.132	103.20	'GEN512689 1-GRDA1 GSU1 22'
13WP	00NR	0	'FROM->TO'	G11_051	'CIMARRON - DRAPER LAKE 345KV CKT 1'	717	0.132	103.20	'GEN337008 1-DUKE MCADAMS S1'
13WP	00NR	0	'FROM->TO'	G11_051	'CIMARRON - DRAPER LAKE 345KV CKT 1'	717	0.132	103.18	'GEN505432 1-SIKESTON'
13WP	00NR	0	'FROM->TO'	G11_051	'CIMARRON - DRAPER LAKE 345KV CKT 1'	717	0.132	103.16	'GEN338500 1-MCCLELLAN UNIT #1'
13WP	00NR	0	'FROM->TO'	G11_051	'CIMARRON - DRAPER LAKE 345KV CKT 1'	717	0.132	103.09	'GEN515266 1-AES 1G'
13WP	00NR	0	'FROM->TO'	G11_051	'CIMARRON - DRAPER LAKE 345KV CKT 1'	717	0.132	103.09	'GEN515267 1-AES 2G'
13WP	00NR	0	'FROM->TO'	G11_051	'CIMARRON - DRAPER LAKE 345KV CKT 1'	717	0.132	103.07	'GEN335611 1-WILLOW GLENN UNIT#1'
13WP	00NR	0	'FROM->TO'	G11_051	'CIMARRON - DRAPER LAKE 345KV CKT 1'	717	0.132	103.05	'GEN511840 1-NORTHEASTERN STATION #3'
13WP	00NR	0	'FROM->TO'	G11_051	'CIMARRON - DRAPER LAKE 345KV CKT 1'	717	0.132	103.05	'GEN337954 1-LYNCH UNIT #3'
13WP	00NR	0	'FROM->TO'	G11_051	'CIMARRON - DRAPER LAKE 345KV CKT 1'	717	0.132	103.03	'GEN511841 1-NORTHEASTERN STATION #4'
13WP	00NR	0	'FROM->TO'	G11_051	'CIMARRON - DRAPER LAKE 345KV CKT 1'	717	0.132	103.02	'GEN335201 1-NELSON UNIT 1'
13WP	00NR	0	'FROM->TO'	G11_051	'CIMARRON - DRAPER LAKE 345KV CKT 1'	717	0.132	103.01	'GEN511938 1-OEC STEAM # 1'
13WP	00NR	0	'FROM->TO'	G11_051	'CIMARRON - DRAPER LAKE 345KV CKT 1'	717	0.132	103.01	'GEN511839 1-NORTHEASTERN STATION #2'
13WP	00NR	0	'FROM->TO'	G11_051	'CIMARRON - DRAPER LAKE 345KV CKT 1'	717	0.132	103.01	'GEN335202 1-NELSON UNIT 2'
13WP	00NR	0	'FROM->TO'	G11_051	'CIMARRON - DRAPER LAKE 345KV CKT 1'	717	0.132	102.99	'GEN336944 1-REX BROWN'
13WP	00NR	0	'FROM->TO'	G11_051	'CIMARRON - DRAPER LAKE 345KV CKT 1'	717	0.132	102.97	'7JASPER 345.00 - BLACKBERRY 345KV CKT 1'
13WP	00NR	0	'FROM->TO'	G11_051	'CIMARRON - DRAPER LAKE 345KV CKT 1'	717	0.132	102.96	'GEN506749 1-EASTMAN GENERATION A'
13WP	00NR	0	'FROM->TO'	G11_051	'CIMARRON - DRAPER LAKE 345KV CKT 1'	717	0.132	102.92	'GEN337422 1-OUCHITA STG1'
13WP	00NR	0	'FROM->TO'	G11_051	'CIMARRON - DRAPER LAKE 345KV CKT 1'	717	0.132	102.92	'GEN337424 1-OUCHITA STG2'
13WP	00NR	0	'FROM->TO'	G11_051	'CIMARRON - DRAPER LAKE 345KV CKT 1'	717	0.132	102.92	'GEN337426 1-OUCHITA STG3'
13WP	00NR	0	'FROM->TO'	G11_051	'CIMARRON - DRAPER LAKE 345KV CKT 1'	717	0.132	102.91	'GEN511842 1-RIVERSIDE STATION #1'

SEASON	GROUP	SCENARIO	DIRECTION	SOURCE	MONITORED ELEMENT	RATE B (MVA)	TDF	(%MVA) LOADING	CONTINGENCY
13WP	00NR	0	'FROM->TO'	G11_051	'CIMARRON - DRAPER LAKE 345KV CKT 1'	717	0.132	102.89	'GEN335137 C4-PPG'
13WP	00NR	0	'FROM->TO'	G11_051	'CIMARRON - DRAPER LAKE 345KV CKT 1'	717	0.132	102.89	'GEN338510 1-1S1KNWRI'
13WP	00NR	0	'FROM->TO'	G11_051	'CIMARRON - DRAPER LAKE 345KV CKT 1'	717	0.132	102.89	'GEN338511 1-1C7KNWRI'
13WP	00NR	0	'FROM->TO'	G11_051	'CIMARRON - DRAPER LAKE 345KV CKT 1'	717	0.132	102.87	'GEN338513 1-BAILEY UNIT #1'
13WP	00NR	0	'FROM->TO'	G11_051	'CIMARRON - DRAPER LAKE 345KV CKT 1'	717	0.132	102.82	'GEN500915 3-WESTERN KRAFT'
13WP	00NR	0	'FROM->TO'	G11_051	'CIMARRON - DRAPER LAKE 345KV CKT 1'	717	0.132	102.81	'GEN300015 1-1SGPDEL 18.000'
13WP	00NR	0	'FROM->TO'	G11_051	'CIMARRON - DRAPER LAKE 345KV CKT 1'	717	0.132	102.81	'GEN300016 1-1G1GPDEL 18.000'
13WP	00NR	0	'FROM->TO'	G11_051	'CIMARRON - DRAPER LAKE 345KV CKT 1'	717	0.132	102.81	'GEN300017 1-1G2GPDEL 18.000'
13WP	00NR	0	'FROM->TO'	G11_051	'CIMARRON - DRAPER LAKE 345KV CKT 1'	717	0.132	102.80	'GEN501910 1-ACADIA UNIT ST1'
13WP	00NR	0	'FROM->TO'	G11_051	'CIMARRON - DRAPER LAKE 345KV CKT 1'	717	0.132	102.79	'GEN334467 1-DUPONT UNIT#1'
13WP	00NR	0	'FROM->TO'	G11_051	'CIMARRON - DRAPER LAKE 345KV CKT 1'	717	0.132	102.79	'GEN503900 1-FITZHUGH CT1'
13WP	00NR	0	'FROM->TO'	G11_051	'CIMARRON - DRAPER LAKE 345KV CKT 1'	717	0.132	102.79	'GEN334335 1-TOLEDO BEND'
13WP	00NR	0	'FROM->TO'	G11_051	'CIMARRON - DRAPER LAKE 345KV CKT 1'	717	0.132	102.77	'GEN335546 3-DOW COGEN'
13WP	00NR	0	'FROM->TO'	G11_051	'CIMARRON - DRAPER LAKE 345KV CKT 1'	717	0.132	102.77	'GEN337124 5-LS POWER BATESVILLE'
13WP	00NR	0	'FROM->TO'	G11_051	'CIMARRON - DRAPER LAKE 345KV CKT 1'	717	0.132	102.76	'GEN318008 3-5MOSEL161 161.00'
13WP	00NR	0	'FROM->TO'	G11_051	'CIMARRON - DRAPER LAKE 345KV CKT 1'	717	0.132	102.75	'A059'
13WP	00NR	0	'FROM->TO'	G11_051	'CIMARRON - DRAPER LAKE 345KV CKT 1'	717	0.132	102.75	'EUREKA SPRIN'
13WP	00NR	0	'FROM->TO'	G11_051	'CIMARRON - DRAPER LAKE 345KV CKT 1'	717	0.132	102.74	'GEN336176 1-UNION CARBIDE COGEN GT1'
13WP	00NR	0	'FROM->TO'	G11_051	'CIMARRON - DRAPER LAKE 345KV CKT 1'	717	0.132	102.74	'GEN336177 1-UNION CARBIDE COGEN GT2'
13WP	00NR	0	'FROM->TO'	G11_051	'CIMARRON - DRAPER LAKE 345KV CKT 1'	717	0.132	102.71	'GEN509409 1-WILKES #3'
13WP	00NR	0	'FROM->TO'	G11_051	'CIMARRON - DRAPER LAKE 345KV CKT 1'	717	0.132	102.65	'GEN300003 1-THOMAS HILL UNIT 3'
13WP	00NR	0	'FROM->TO'	G11_051	'CIMARRON - DRAPER LAKE 345KV CKT 1'	717	0.132	102.23	'BASE CASE'
13WP	00NR	0	'FROM->TO'	G11_051	'CIMARRON - DRAPER LAKE 345KV CKT 1'	717	0.132	101.76	'GEN532663 1-LAWRENCE ENERGY CENTER UNIT 5'
13WP	00NR	0	'FROM->TO'	G11_051	'CIMARRON - DRAPER LAKE 345KV CKT 1'	717	0.132	101.73	'GEN542956 2-LACYGNE UNIT #2'
13WP	00NR	0	'FROM->TO'	G11_051	'CIMARRON - DRAPER LAKE 345KV CKT 1'	717	0.132	101.71	'GEN542955 1-LACYGNE UNIT #1'
13WP	00NR	0	'FROM->TO'	G11_051	'CIMARRON - DRAPER LAKE 345KV CKT 1'	717	0.132	101.64	'DRAPER LAKE - DRPCAPS4 138.00 138KV CKT 1'
13WP	00NR	0	'FROM->TO'	G11_051	'CIMARRON - DRAPER LAKE 345KV CKT 1'	717	0.132	101.58	'WELSH - WILKES 345KV CKT 1'
13WP	00NR	0	'FROM->TO'	G11_051	'CIMARRON - DRAPER LAKE 345KV CKT 1'	717	0.132	101.50	'GEN523462 1-BLACKHAWK GEN #2'
13WP	00NR	0	'FROM->TO'	G11_051	'CIMARRON - DRAPER LAKE 345KV CKT 1'	717	0.132	101.50	'GEN523461 1-BLACKHAWK GEN #1'
13WP	00NR	0	'FROM->TO'	G11_051	'CIMARRON - DRAPER LAKE 345KV CKT 1'	717	0.132	101.47	'SPP-AEPW-04'
13WP	00NR	0	'FROM->TO'	G11_051	'CIMARRON - DRAPER LAKE 345KV CKT 1'	717	0.132	101.28	'GEN527165 1-Mustang Gen #5'
13WP	00NR	0	'FROM->TO'	G11_051	'CIMARRON - DRAPER LAKE 345KV CKT 1'	717	0.132	101.28	'GEN527164 1-MUSTANG GEN #4 22 KV'
13WP	00NR	0	'FROM->TO'	G11_051	'CIMARRON - DRAPER LAKE 345KV CKT 1'	717	0.132	101.27	'GEN532653 1-JEFFREY ENERGY CENTER UNIT 3'
13WP	00NR	0	'FROM->TO'	G11_051	'CIMARRON - DRAPER LAKE 345KV CKT 1'	717	0.132	101.26	'GEN527901 1-HOBBS PLANT #1 (CT)'
13WP	00NR	0	'FROM->TO'	G11_051	'CIMARRON - DRAPER LAKE 345KV CKT 1'	717	0.132	101.26	'GEN527902 1-HOBBS PLANT #2 (CT)'
13WP	00NR	0	'FROM->TO'	G11_051	'CIMARRON - DRAPER LAKE 345KV CKT 1'	717	0.132	101.26	'NORTHWEST TEXARKANA - VALLIANT 345KV CKT 1'
13WP	00NR	0	'FROM->TO'	G11_051	'CIMARRON - DRAPER LAKE 345KV CKT 1'	717	0.132	101.25	'GEN532651 1-JEFFREY ENERGY CENTER UNIT 1'
13WP	00NR	0	'FROM->TO'	G11_051	'CIMARRON - DRAPER LAKE 345KV CKT 1'	717	0.132	101.23	'GEN532652 1-JEFFREY ENERGY CENTER UNIT 2'
13WP	00NR	0	'FROM->TO'	G11_051	'CIMARRON - DRAPER LAKE 345KV CKT 1'	717	0.132	101.22	'GEN527163 1-MUSTANG GEN #3 22 KV'
13WP	00NR	0	'FROM->TO'	G11_051	'CIMARRON - DRAPER LAKE 345KV CKT 1'	717	0.132	101.20	'GEN527161 1-MUSTANG GEN #1'
13WP	00NR	0	'FROM->TO'	G11_051	'CIMARRON - DRAPER LAKE 345KV CKT 1'	717	0.132	101.19	'GEN527162 1-MUSTANG GEN #2'
13WP	00NR	0	'FROM->TO'	G11_051	'CIMARRON - DRAPER LAKE 345KV CKT 1'	717	0.132	101.13	'GEN520997 1-MORLND2'
13WP	00NR	0	'FROM->TO'	G11_051	'CIMARRON - DRAPER LAKE 345KV CKT 1'	717	0.132	101.12	'LYDIA - WELSH 345KV CKT 1'
13WP	00NR	0	'FROM->TO'	G11_051	'CIMARRON - DRAPER LAKE 345KV CKT 1'	717	0.132	101.06	'GEN520998 1-MORLND3'
13WP	00NR	0	'FROM->TO'	G11_051	'CIMARRON - DRAPER LAKE 345KV CKT 1'	717	0.132	101.03	'GEN527903 1-HOBBS PLANT #3 (ST)'
13WP	00NR	0	'FROM->TO'	G11_051	'CIMARRON - DRAPER LAKE 345KV CKT 1'	717	0.132	100.80	'GEN526333 1-JONES GEN #3 21 KV'
13WP	00NR	0	'FROM->TO'	G11_051	'CIMARRON - DRAPER LAKE 345KV CKT 1'	717	0.132	100.80	'GEN526334 1-JONES_4 116.500'
13WP	00NR	0	'FROM->TO'	G11_051	'CIMARRON - DRAPER LAKE 345KV CKT 1'	717	0.132	100.59	'LYDIA - VALLIANT 345KV CKT 1'
13WP	00NR	0	'FROM->TO'	G11_051	'CIMARRON - DRAPER LAKE 345KV CKT 1'	717	0.132	100.43	'GEN531447 1-HOLCOMB GENERATOR'
13WP	00NR	0	'FROM->TO'	G11_051	'CIMARRON - DRAPER LAKE 345KV CKT 1'	717	0.132	100.34	'GEN514805 1-SOONER UNIT 1'
13WP	00NR	0	'FROM->TO'	G11_051	'CIMARRON - DRAPER LAKE 345KV CKT 1'	717	0.132	100.20	'SPP-AEPW-01'
13WP	00NR	0	'FROM->TO'	G11_051	'CIMARRON - DRAPER LAKE 345KV CKT 1'	717	0.132	100.06	'GEN525561 1-TOLK GEN #1 24 KV'
13WP	00NR	0	'FROM->TO'	G11_051	'CIMARRON - DRAPER LAKE 345KV CKT 1'	717	0.132	100.00	'GEN514806 1-SOONER UNIT 2'
13WP	00NR	0	'FROM->TO'	G11_051	'CIMARRON - DRAPER LAKE 345KV CKT 1'	717	0.132	103.30	'A222'
13WP	00NR	0	'FROM->TO'	G11_051	'CIMARRON - DRAPER LAKE 345KV CKT 1'	717	0.132	103.30	'7SAREPT 345.00 - ELDORADO EHV 345KV CKT 1'
13WP	00NR	0	'FROM->TO'	G11_051	'CIMARRON - DRAPER LAKE 345KV CKT 1'	717	0.132	103.28	'ELDORADO EHV 500/345KV TRANSFORMER CKT 1'
13WP	00NR	0	'FROM->TO'	G11_051	'CIMARRON - DRAPER LAKE 345KV CKT 1'	717	0.132	103.31	'7SAREPT 345.00 - LONGWOOD 345KV CKT 1'
13WP	00NR	0	'FROM->TO'	G11_051	'CIMARRON - DRAPER LAKE 345KV CKT 1'	717	0.132	102.98	'ELDORADO EHV - SHERIDAN EHV 500KV CKT 1'
13WP	00NR	0	'FROM->TO'	G11_051	'CIMARRON - DRAPER LAKE 345KV CKT 1'	717	0.132	102.75	'EL RENO - ROMAN NOSE 138KV CKT 1'
13WP	00NR	0	'FROM->TO'	G11_051	'CIMARRON - DRAPER LAKE 345KV CKT 1'	717	0.132	102.72	'ROMAN NOSE - SOUTHARD 138KV CKT 1'
13WP	00NR	0	'FROM->TO'	G11_051	'CIMARRON - DRAPER LAKE 345KV CKT 1'	717	0.132	102.80	'WOODRING (WOODRNG2) 345/138/13.8KV TRANSFORMER CKT 1'
13WP	00NR	0	'FROM->TO'	G11_051	'CIMARRON - DRAPER LAKE 345KV CKT 1'	717	0.132	101.49	'FIXICO TAP - MAUD 138KV CKT 1'
13WP	00NR	0	'FROM->TO'	G11_051	'CIMARRON - DRAPER LAKE 345KV CKT 1'	717	0.132	101.78	'FIXICO TAP - WELEETKA 138KV CKT 1'
13WP	00NR	0	'FROM->TO'	G11_051	'CIMARRON - DRAPER LAKE 345KV CKT 1'	717	0.132	101.81	'RENO COUNTY - WICHITA 345KV CKT 1'
13WP	00NR	0	'FROM->TO'	G11_051	'CIMARRON - DRAPER LAKE 345KV CKT 1'	717	0.132	101.54	'OGE3TERM36'
13WP	00NR	0	'FROM->TO'	G11_051	'CIMARRON - DRAPER LAKE 345KV CKT 1'	717	0.132	103.93	'MORISNT4 138.00 - STILLWATER 138KV CKT 1'
13WP	00NR	0	'FROM->TO'	G11_051	'CIMARRON - DRAPER LAKE 345KV CKT 1'	717	0.132	103.24	'MCELROY - STILLWATER 138KV CKT 1'
13WP	00NR	0	'FROM->TO'	G11_051	'CIMARRON - DRAPER LAKE 345KV CKT 1'	717	0.132	102.99	'KINZE - MCELROY 138KV CKT 1'
13WP	00NR	0	'FROM->TO'	G11_051	'CIMARRON - DRAPER LAKE 345KV CKT 1'	717	0.132	104.00	'ARCADIA - KAMO MEMORIAL 138KV CKT 1'
13WP	00NR	0	'FROM->TO'	G11_051	'CIMARRON - DRAPER LAKE 345KV CKT 1'	717	0.132	102.60	'MORISNT4 138.00 - SOONER 138KV CKT 1'
13WP	00NR	0	'FROM->TO'	G11_051	'CIMARRON - DRAPER LAKE 345KV CKT 1'	717	0.132	103.07	'HOLLYWOOD - PLEASANT VALLEY 138KV CKT 1'
13WP	00NR	0	'FROM->TO'	G11_051	'CIMARRON - DRAPER LAKE 345KV CKT 1'	717	0.132	102.95	'ARCADIA - OMPA-EDMOND GARBER(LAKE) 138KV CKT 1'
13WP	00NR	0	'FROM->TO'	G11_051	'CIMARRON - DRAPER LAKE 345KV CKT 1'	717	0.132	102.88	'CHITWOOD - OMPA-EDMOND GARBER(LAKE) 138KV CKT 1'
13WP	00NR	0	'FROM->TO'	G11_051	'CIMARRON - DRAPER LAKE 345KV CKT 1'	717	0.132	102.86	'CHITWOOD - JONES TAP 138KV CKT 1'
13WP	00NR	0	'FROM->TO'	G11_051	'CIMARRON - DRAPER LAKE 345KV CKT 1'	717	0.132	103.68	'HORSESHOE LAKE - KAMO MEMORIAL 138KV CKT 1'
13WP	00NR	0	'FROM->TO'	G11_051	'CIMARRON - DRAPER LAKE 345KV CKT 1'	717	0.132	101.09	'FRANKLIN - PINK SW 138KV CKT 1'
13WP	00NR	0	'FROM->TO'	G11_051	'CIMARRON - DRAPER LAKE 345KV CKT 1'	717	0.132	100.81	'FRANKLIN - FRANKLIN SW 138KV CKT 1'
13WP	00NR	0	'FROM->TO'	G11_051	'CIMARRON - DRAPER LAKE 345KV CKT 1'	717	0.132	101.26	'SEMINOLE (SEMINOL2) 345/138/14.4KV TRANSFORMER CKT 1'

SEASON	GROUP	SCENARIO	DIRECTION	SOURCE	MONITORED ELEMENT	RATE B (MVA)	TDF	(%MVA) LOADING	CONTINGENCY
13WP	00NR	0	'FROM->TO'	G11_051	'CIMARRON - DRAPER LAKE 345KV CKT 1'	717	0.132	101.25	'SEMINOLE (SEMINOL1) 345/138/14.4KV TRANSFORMER CKT 1'
13WP	00NR	0	'FROM->TO'	G11_051	'CIMARRON - DRAPER LAKE 345KV CKT 1'	717	0.132	103.97	'MCCLAIN - PLEASANT VALLEY 138KV CKT 1'
13WP	00NR	0	'FROM->TO'	G11_051	'CIMARRON - DRAPER LAKE 345KV CKT 1'	717	0.130	100.16	'G08-13T 345.00 - SUMNERCO 345.00 345KV CKT 1'
17WP	00NR	0	'FROM->TO'	G11_051	'CIMARRON - DRAPER LAKE 345KV CKT 1'	717	0.130	101.05	'GEN336821 1-GRAND GULF UNIT'
17WP	00NR	0	'FROM->TO'	G11_051	'CIMARRON - DRAPER LAKE 345KV CKT 1'	717	0.130	100.72	'GEN336153 1-WATERFORD UNIT#3'
13WP	00NR	0	'FROM->TO'	G11_051	'CIMARRON - DRAPER LAKE 345KV CKT 1'	717	0.129	103.60	'CANADIAN RIVER - MUSKOGEE 345KV CKT 1'
13WP	00NR	0	'FROM->TO'	G11_051	'CIMARRON - DRAPER LAKE 345KV CKT 1'	717	0.127	100.00	'DRAPER LAKE - SEMINOLE 345KV CKT 3'
12WP	00NR	0	'TO->FROM'	G11_051	'BENTON - WICHITA 345KV CKT 1'	956	0.099	111.25	'GEN532751 1-WOLF CREEK GENERATING STATION UNIT 1'
13WP	00NR	0	'TO->FROM'	G11_051	'BENTON - WICHITA 345KV CKT 1'	956	0.099	109.79	'GEN532751 1-WOLF CREEK GENERATING STATION UNIT 1'
17WP	00NR	0	'TO->FROM'	G11_051	'BENTON - WICHITA 345KV CKT 1'	956	0.097	106.16	'GEN532751 1-WOLF CREEK GENERATING STATION UNIT 1'
17SP	00NR	0	'TO->FROM'	G11_051	'BENTON - WICHITA 345KV CKT 1'	956	0.095	108.74	'GEN532751 1-WOLF CREEK GENERATING STATION UNIT 1'
12G	01NR	0	'FROM->TO'	G11_051	'CLEO CORNER - MEN TAP 138KV CKT 1'	191	0.059	110.91	'DBL-MATT-TAT'
12WP	00NR	0	'FROM->TO'	G11_051	'CLEO CORNER - MEN TAP 138KV CKT 1'	191	0.059	130.62	'DBL-MATT-TAT'
12WP	00NR	0	'FROM->TO'	G11_051	'CLEO CORNER - MEN TAP 138KV CKT 1'	191	0.059	116.14	'G11_051T 345.00 - TATONGA7 345.00 345KV CKT 1'
13WP	00NR	0	'FROM->TO'	G11_051	'CLEO CORNER - MEN TAP 138KV CKT 1'	191	0.059	127.83	'DBL-MATT-TAT'
13WP	00NR	0	'FROM->TO'	G11_051	'CLEO CORNER - MEN TAP 138KV CKT 1'	191	0.059	114.53	'G11_051T 345.00 - TATONGA7 345.00 345KV CKT 1'
17WP	00NR	0	'FROM->TO'	G11_051	'CLEO CORNER - MEN TAP 138KV CKT 1'	191	0.059	121.19	'DBL-MATT-TAT'
17WP	00NR	0	'FROM->TO'	G11_051	'CLEO CORNER - MEN TAP 138KV CKT 1'	191	0.059	108.47	'G11_051T 345.00 - TATONGA7 345.00 345KV CKT 1'
12SP	00NR	0	'FROM->TO'	G11_051	'CLEO CORNER - MEN TAP 138KV CKT 1'	191	0.059	106.90	'DBL-MATT-TAT'
13SP	00NR	0	'FROM->TO'	G11_051	'CLEO CORNER - MEN TAP 138KV CKT 1'	191	0.058	105.80	'DBL-MATT-TAT'
12SP	00NR	0	'TO->FROM'	G11_051	'ROMAN NOSE - SOUTHARD 138KV CKT 1'	153	0.058	124.34	'DBL-MATT-TAT'
12SP	00NR	0	'TO->FROM'	G11_051	'EL RENO - ROMAN NOSE 138KV CKT 1'	153	0.058	121.03	'DBL-MATT-TAT'
12SP	00NR	0	'TO->FROM'	G11_051	'ROMAN NOSE - SOUTHARD 138KV CKT 1'	153	0.058	107.72	'G11_051T 345.00 - TATONGA7 345.00 345KV CKT 1'
12SP	00NR	0	'TO->FROM'	G11_051	'EL RENO - ROMAN NOSE 138KV CKT 1'	153	0.058	107.39	'G11_051T 345.00 - TATONGA7 345.00 345KV CKT 1'
13SP	00NR	0	'TO->FROM'	G11_051	'ROMAN NOSE - SOUTHARD 138KV CKT 1'	153	0.057	121.43	'DBL-MATT-TAT'
13SP	00NR	0	'TO->FROM'	G11_051	'EL RENO - ROMAN NOSE 138KV CKT 1'	153	0.057	118.40	'DBL-MATT-TAT'
13SP	00NR	0	'TO->FROM'	G11_051	'ROMAN NOSE - SOUTHARD 138KV CKT 1'	153	0.057	105.04	'G11_051T 345.00 - TATONGA7 345.00 345KV CKT 1'
13SP	00NR	0	'TO->FROM'	G11_051	'EL RENO - ROMAN NOSE 138KV CKT 1'	153	0.057	104.89	'G11_051T 345.00 - TATONGA7 345.00 345KV CKT 1'
17SP	00NR	0	'TO->FROM'	G11_051	'ROMAN NOSE - SOUTHARD 138KV CKT 1'	153	0.056	105.89	'G11_051T 345.00 - TATONGA7 345.00 345KV CKT 1'
17SP	00NR	0	'TO->FROM'	G11_051	'EL RENO - ROMAN NOSE 138KV CKT 1'	153	0.056	104.58	'G11_051T 345.00 - TATONGA7 345.00 345KV CKT 1'
12WP	00NR	0	'TO->FROM'	G11_051	'ROMAN NOSE - SOUTHARD 138KV CKT 1'	185	0.056	128.15	'DBL-MATT-TAT'
12WP	00NR	0	'TO->FROM'	G11_051	'EL RENO - ROMAN NOSE 138KV CKT 1'	185	0.056	122.73	'DBL-MATT-TAT'
12WP	00NR	0	'TO->FROM'	G11_051	'ROMAN NOSE - SOUTHARD 138KV CKT 1'	185	0.056	113.53	'G11_051T 345.00 - TATONGA7 345.00 345KV CKT 1'
12WP	00NR	0	'TO->FROM'	G11_051	'EL RENO - ROMAN NOSE 138KV CKT 1'	185	0.056	109.10	'G11_051T 345.00 - TATONGA7 345.00 345KV CKT 1'
12G	01NR	0	'TO->FROM'	G11_051	'EL RENO - ROMAN NOSE 138KV CKT 1'	153	0.055	192.82	'DBL-MATT-TAT'
12G	01NR	0	'TO->FROM'	G11_051	'EL RENO - ROMAN NOSE 138KV CKT 1'	153	0.055	151.03	'G11_051T 345.00 - TATONGA7 345.00 345KV CKT 1'
12G	01NR	0	'TO->FROM'	G11_051	'ROMAN NOSE - SOUTHARD 138KV CKT 1'	153	0.055	114.28	'DBL-MATT-TAT'
13WP	00NR	0	'TO->FROM'	G11_051	'ROMAN NOSE - SOUTHARD 138KV CKT 1'	185	0.055	124.48	'DBL-MATT-TAT'
13WP	00NR	0	'TO->FROM'	G11_051	'EL RENO - ROMAN NOSE 138KV CKT 1'	185	0.055	118.67	'DBL-MATT-TAT'
13WP	00NR	0	'TO->FROM'	G11_051	'ROMAN NOSE - SOUTHARD 138KV CKT 1'	185	0.055	110.67	'G11_051T 345.00 - TATONGA7 345.00 345KV CKT 1'
13WP	00NR	0	'TO->FROM'	G11_051	'EL RENO - ROMAN NOSE 138KV CKT 1'	185	0.055	106.38	'G11_051T 345.00 - TATONGA7 345.00 345KV CKT 1'
17WP	00NR	0	'TO->FROM'	G11_051	'ROMAN NOSE - SOUTHARD 138KV CKT 1'	185	0.055	116.00	'DBL-MATT-TAT'
17WP	00NR	0	'TO->FROM'	G11_051	'EL RENO - ROMAN NOSE 138KV CKT 1'	185	0.055	110.42	'DBL-MATT-TAT'
17WP	00NR	0	'TO->FROM'	G11_051	'ROMAN NOSE - SOUTHARD 138KV CKT 1'	185	0.055	102.15	'G11_051T 345.00 - TATONGA7 345.00 345KV CKT 1'
12G	01NR	0	'TO->FROM'	G11_051	'GLASS MOUNTAIN - MOORELAND 138KV CKT 1'	152	0.052	138.09	'DBL-MATT-TAT'
12G	01NR	0	'TO->FROM'	G11_051	'CLEO CORNER - GLASS MOUNTAIN 138KV CKT 1'	153	0.052	133.82	'DBL-MATT-TAT'
12G	01NR	0	'TO->FROM'	G11_051	'GLASS MOUNTAIN - MOORELAND 138KV CKT 1'	152	0.052	100.56	'G11_051T 345.00 - TATONGA7 345.00 345KV CKT 1'
12WP	00NR	0	'TO->FROM'	G11_051	'GLASS MOUNTAIN - MOORELAND 138KV CKT 1'	152	0.052	161.65	'DBL-MATT-TAT'
12WP	00NR	0	'TO->FROM'	G11_051	'GLASS MOUNTAIN - MOORELAND 138KV CKT 1'	152	0.052	145.22	'G11_051T 345.00 - TATONGA7 345.00 345KV CKT 1'
12WP	00NR	0	'TO->FROM'	G11_051	'CLEO CORNER - GLASS MOUNTAIN 138KV CKT 1'	185	0.052	130.14	'DBL-MATT-TAT'
12WP	00NR	0	'TO->FROM'	G11_051	'CLEO CORNER - GLASS MOUNTAIN 138KV CKT 1'	185	0.052	116.81	'G11_051T 345.00 - TATONGA7 345.00 345KV CKT 1'
17WP	00NR	0	'TO->FROM'	G11_051	'GLASS MOUNTAIN - MOORELAND 138KV CKT 1'	152	0.051	151.85	'DBL-MATT-TAT'
17WP	00NR	0	'TO->FROM'	G11_051	'GLASS MOUNTAIN - MOORELAND 138KV CKT 1'	152	0.051	137.62	'G11_051T 345.00 - TATONGA7 345.00 345KV CKT 1'
17WP	00NR	0	'TO->FROM'	G11_051	'CLEO CORNER - GLASS MOUNTAIN 138KV CKT 1'	185	0.051	122.07	'DBL-MATT-TAT'
17WP	00NR	0	'TO->FROM'	G11_051	'CLEO CORNER - GLASS MOUNTAIN 138KV CKT 1'	185	0.051	110.48	'G11_051T 345.00 - TATONGA7 345.00 345KV CKT 1'
12SP	00NR	0	'TO->FROM'	G11_051	'GLASS MOUNTAIN - MOORELAND 138KV CKT 1'	152	0.051	139.63	'DBL-MATT-TAT'
12SP	00NR	0	'TO->FROM'	G11_051	'CLEO CORNER - GLASS MOUNTAIN 138KV CKT 1'	153	0.051	133.97	'DBL-MATT-TAT'
12SP	00NR	0	'TO->FROM'	G11_051	'GLASS MOUNTAIN - MOORELAND 138KV CKT 1'	152	0.051	125.80	'G11_051T 345.00 - TATONGA7 345.00 345KV CKT 1'
12SP	00NR	0	'TO->FROM'	G11_051	'CLEO CORNER - GLASS MOUNTAIN 138KV CKT 1'	153	0.051	120.36	'G11_051T 345.00 - TATONGA7 345.00 345KV CKT 1'
13WP	00NR	0	'TO->FROM'	G11_051	'GLASS MOUNTAIN - MOORELAND 138KV CKT 1'	152	0.051	158.57	'DBL-MATT-TAT'
13WP	00NR	0	'TO->FROM'	G11_051	'GLASS MOUNTAIN - MOORELAND 138KV CKT 1'	152	0.051	143.61	'G11_051T 345.00 - TATONGA7 345.00 345KV CKT 1'
13WP	00NR	0	'TO->FROM'	G11_051	'CLEO CORNER - GLASS MOUNTAIN 138KV CKT 1'	185	0.051	127.62	'DBL-MATT-TAT'
13WP	00NR	0	'TO->FROM'	G11_051	'CLEO CORNER - GLASS MOUNTAIN 138KV CKT 1'	185	0.051	115.47	'G11_051T 345.00 - TATONGA7 345.00 345KV CKT 1'
17SP	00NR	0	'TO->FROM'	G11_051	'GLASS MOUNTAIN - MOORELAND 138KV CKT 1'	152	0.051	123.25	'G11_051T 345.00 - TATONGA7 345.00 345KV CKT 1'
17SP	00NR	0	'TO->FROM'	G11_051	'CLEO CORNER - GLASS MOUNTAIN 138KV CKT 1'	153	0.051	117.57	'G11_051T 345.00 - TATONGA7 345.00 345KV CKT 1'
13SP	00NR	0	'TO->FROM'	G11_051	'GLASS MOUNTAIN - MOORELAND 138KV CKT 1'	152	0.051	138.49	'DBL-MATT-TAT'
13SP	00NR	0	'TO->FROM'	G11_051	'CLEO CORNER - GLASS MOUNTAIN 138KV CKT 1'	153	0.051	132.80	'DBL-MATT-TAT'
13SP	00NR	0	'TO->FROM'	G11_051	'GLASS MOUNTAIN - MOORELAND 138KV CKT 1'	152	0.051	124.81	'G11_051T 345.00 - TATONGA7 345.00 345KV CKT 1'
13SP	00NR	0	'TO->FROM'	G11_051	'CLEO CORNER - GLASS MOUNTAIN 138KV CKT 1'	153	0.051	119.32	'G11_051T 345.00 - TATONGA7 345.00 345KV CKT 1'
12SP	00NR	0	'FROM->TO'	G11_051	'NORTHWEST (NORTWST2) 345/138/13.8KV TRANSFORMER CKT 1'	493	0.050	116.95	'NORTHWEST (NORTWST3) 345/138/13.8KV TRANSFORMER CKT 1'
12SP	00NR	0	'FROM->TO'	G11_051	'NORTHWEST (NORTWST2) 345/138/13.8KV TRANSFORMER CKT 1'	493	0.050	114.57	'NORTHWEST (NORTWST3) 345/138/13.8KV TRANSFORMER CKT 1'
17SP	00NR	0	'TO->FROM'	G11_051	'DOVER SW - OKEENE 138KV CKT 1'	130	0.050	116.32	'G11_051T 345.00 - TATONGA7 345.00 345KV CKT 1'
13SP	00NR	0	'FROM->TO'	G11_051	'NORTHWEST (NORTWST2) 345/138/13.8KV TRANSFORMER CKT 1'	493	0.050	114.16	'NORTHWEST (NORTWST3) 345/138/13.8KV TRANSFORMER CKT 1'
13SP	00NR	0	'FROM->TO'	G11_051	'NORTHWEST (NORTWST2) 345/138/13.8KV TRANSFORMER CKT 1'	493	0.050	111.65	'NORTHWEST (NORTWST3) 345/138/13.8KV TRANSFORMER CKT 1'
17WP	00NR	0	'TO->FROM'	G11_051	'DOVER SW - OKEENE 138KV CKT 1'	143	0.050	139.52	'DBL-MATT-TAT'
17WP	00NR	0	'TO->FROM'	G11_051	'DOVER SW - OKEENE 138KV CKT 1'	143	0.050	124.93	'G11_051T 345.00 - TATONGA7 345.00 345KV CKT 1'
12G	01NR	0	'TO->FROM'	G11_051	'FPL SWITCH - WOODWARD 138KV CKT 1'	153	0.049	109.68	'DBL-MATT-TAT'
12SP	00NR	0	'FROM->TO'	G11_051	'NORTHWEST (NORTWST3) 345/138/13.8KV TRANSFORMER CKT 1'	493	0.049	107.14	'NORTHWEST (NORTWST2) 345/138/13.8KV TRANSFORMER CKT 1'

SEASON	GROUP	SCENARIO	DIRECTION	SOURCE	MONITORED ELEMENT	RATE B (MVA)	TDF	(%MVA) LOADING	CONTINGENCY
12SP	00NR	0	'FROM->TO'	G11_051	'NORTHWEST (NORTWST3) 345/138/13.8KV TRANSFORMER CKT 1'	493	0.049	104.95	'NORTHWEST (NORTWST2) 345/138/13.8KV TRANSFORMER CKT 1'
13SP	00NR	0	'FROM->TO'	G11_051	'NORTHWEST (NORTWST3) 345/138/13.8KV TRANSFORMER CKT 1'	493	0.048	104.49	'NORTHWEST (NORTWST2) 345/138/13.8KV TRANSFORMER CKT 1'
13SP	00NR	0	'FROM->TO'	G11_051	'NORTHWEST (NORTWST3) 345/138/13.8KV TRANSFORMER CKT 1'	493	0.048	102.18	'NORTHWEST (NORTWST2) 345/138/13.8KV TRANSFORMER CKT 1'
17WP	00NR	0	'TO->FROM'	G11_051	'CEDARDALE - MOORELAND 138KV CKT 1'	214	0.047	102.24	'DBL-MATT-TAT'
17WP	00NR	0	'FROM->TO'	G11_051	'CEDARDALE - OKEENE 138KV CKT 1'	214	0.047	101.06	'DBL-MATT-TAT'
12SP	00NR	0	'TO->FROM'	G11_051	'CEDARDALE - MOORELAND 138KV CKT 1'	179	0.043	106.10	'DBL-MATT-TAT'
12SP	00NR	0	'FROM->TO'	G11_051	'CEDARDALE - OKEENE 138KV CKT 1'	179	0.043	104.51	'DBL-MATT-TAT'
12G	01NR	0	'TO->FROM'	G11_051	'DOVER SW - OKEENE 138KV CKT 1'	130	0.043	125.86	'DBL-MATT-TAT'
13WP	00NR	0	'TO->FROM'	G11_051	'DOVER SW - OKEENE 138KV CKT 1'	143	0.043	133.91	'DBL-MATT-TAT'
13WP	00NR	0	'TO->FROM'	G11_051	'DOVER SW - OKEENE 138KV CKT 1'	143	0.043	120.28	'G11_051T 345.00 - TATONGA7 345.00 345KV CKT 1'
12WP	00NR	0	'TO->FROM'	G11_051	'DOVER SW - OKEENE 138KV CKT 1'	143	0.043	132.65	'DBL-MATT-TAT'
12WP	00NR	0	'TO->FROM'	G11_051	'DOVER SW - OKEENE 138KV CKT 1'	143	0.043	118.10	'G11_051T 345.00 - TATONGA7 345.00 345KV CKT 1'
12SP	00NR	0	'TO->FROM'	G11_051	'DOVER SW - OKEENE 138KV CKT 1'	130	0.043	119.90	'DBL-MATT-TAT'
12SP	00NR	0	'TO->FROM'	G11_051	'DOVER SW - OKEENE 138KV CKT 1'	130	0.043	106.38	'G11_051T 345.00 - TATONGA7 345.00 345KV CKT 1'
13SP	00NR	0	'TO->FROM'	G11_051	'DOVER SW - OKEENE 138KV CKT 1'	130	0.043	120.20	'DBL-MATT-TAT'
13SP	00NR	0	'TO->FROM'	G11_051	'DOVER SW - OKEENE 138KV CKT 1'	130	0.043	106.64	'G11_051T 345.00 - TATONGA7 345.00 345KV CKT 1'
12G	01NR	0	'TO->FROM'	G11_051	'CEDARDALE - MOORELAND 138KV CKT 1'	179	0.043	102.15	'DBL-MATT-TAT'
12G	01NR	0	'FROM->TO'	G11_051	'CEDARDALE - OKEENE 138KV CKT 1'	179	0.043	100.74	'DBL-MATT-TAT'
12WP	00NR	0	'TO->FROM'	G11_051	'CEDARDALE - MOORELAND 138KV CKT 1'	214	0.043	102.99	'DBL-MATT-TAT'
12WP	00NR	0	'FROM->TO'	G11_051	'CEDARDALE - OKEENE 138KV CKT 1'	214	0.043	101.90	'DBL-MATT-TAT'
13SP	00NR	0	'TO->FROM'	G11_051	'CEDARDALE - MOORELAND 138KV CKT 1'	179	0.043	104.05	'DBL-MATT-TAT'
13SP	00NR	0	'FROM->TO'	G11_051	'CEDARDALE - OKEENE 138KV CKT 1'	179	0.043	102.46	'DBL-MATT-TAT'
13WP	00NR	0	'TO->FROM'	G11_051	'CEDARDALE - MOORELAND 138KV CKT 1'	214	0.042	100.86	'DBL-MATT-TAT'
12SP	00NR	0	'FROM->TO'	G11_051	'MOORELAND - NINE MILE 138KV CKT 1'	179	0.042	102.35	'DBL-MATT-TAT'
12SP	00NR	0	'TO->FROM'	G11_051	'MOREWOOD SW - NINE MILE 138KV CKT 1'	179	0.042	102.10	'DBL-MATT-TAT'
13SP	00NR	0	'FROM->TO'	G11_051	'MOORELAND - NINE MILE 138KV CKT 1'	179	0.041	101.83	'DBL-MATT-TAT'
13SP	00NR	0	'TO->FROM'	G11_051	'MOREWOOD SW - NINE MILE 138KV CKT 1'	179	0.041	101.58	'DBL-MATT-TAT'
12G	03ALL	0		G11_051	NCONV-Iteration Limit	1792	0.039	47.07	'G11-17T 345.00 - POST ROCK 345KV CKT 1'
12WP	00NR	0	'TO->FROM'	G11_051	'CLINTON JUNCTION - ELK CITY 138KV CKT 1'	210	0.038	110.70	'DBL-MATT-TAT'
13WP	00NR	0	'TO->FROM'	G11_051	'CLINTON JUNCTION - ELK CITY 138KV CKT 1'	210	0.038	108.57	'DBL-MATT-TAT'
12WP	00NR	0	'TO->FROM'	G11_051	'CLINTON JUNCTION - ELK CITY 138KV CKT 1'	210	0.038	100.79	'G11_051T 345.00 - TATONGA7 345.00 345KV CKT 1'
17WP	00NR	0	'TO->FROM'	G11_051	'CLINTON JUNCTION - ELK CITY 138KV CKT 1'	210	0.038	101.36	'DBL-MATT-TAT'
12G	03ALL	0		G11_051	NCONV-Blown Up	0	0.037	9999.00	'DBL-CIR-RENO'
12G	03ALL2	0		G11_051	NCONV-Blown Up	0	0.037	9999.00	'DBL-CIR-RENO'
12G	03ALL	0		G11_051	NCONV-Iteration Limit	0	0.037	9999.00	'DBL-MULG-CIR'
12G	03ALL2	0		G11_051	NCONV-Iteration Limit	0	0.037	9999.00	'DBL-MULG-CIR'
12G	03ALL	0		G11_051	NCONV-Iteration Limit	0	0.037	9999.00	'DBL-SPRVL-MU'
12G	03ALL2	0		G11_051	NCONV-Iteration Limit	0	0.037	9999.00	'DBL-SPRVL-MU'
17SP	00NR	0	'FROM->TO'	G11_051	'EVANS ENERGY CENTER NORTH - MAIZE 138KV CKT 1'	382	0.035	113.45	'BENTON - WICHITA 345KV CKT 1'
17SP	00NR	0	'TO->FROM'	G11_051	'CHISHOLM - MAIZE 138KV CKT 1'	382	0.035	109.10	'BENTON - WICHITA 345KV CKT 1'
12SP	00NR	0	'FROM->TO'	G11_051	'EVANS ENERGY CENTER NORTH - MAIZE 138KV CKT 1'	382	0.035	122.71	'BENTON - WICHITA 345KV CKT 1'
12SP	00NR	0	'TO->FROM'	G11_051	'CHISHOLM - MAIZE 138KV CKT 1'	382	0.035	118.96	'BENTON - WICHITA 345KV CKT 1'
13SP	00NR	0	'FROM->TO'	G11_051	'EVANS ENERGY CENTER NORTH - MAIZE 138KV CKT 1'	382	0.035	120.61	'BENTON - WICHITA 345KV CKT 1'
13SP	00NR	0	'TO->FROM'	G11_051	'CHISHOLM - MAIZE 138KV CKT 1'	382	0.035	116.74	'BENTON - WICHITA 345KV CKT 1'
12WP	00NR	0	'FROM->TO'	G11_051	'WICHITA (WICHT12X) 345/138/13.8KV TRANSFORMER CKT 1'	440	0.034	111.73	'BENTON - WICHITA 345KV CKT 1'
12WP	00NR	0	'FROM->TO'	G11_051	'WICHITA (WICHT12X) 345/138/13.8KV TRANSFORMER CKT 1'	440	0.034	110.42	'BENTON - WICHITA 345KV CKT 1'
13WP	00NR	0	'FROM->TO'	G11_051	'WICHITA (WICHT12X) 345/138/13.8KV TRANSFORMER CKT 1'	440	0.033	105.68	'BENTON - WICHITA 345KV CKT 1'
13WP	00NR	0	'FROM->TO'	G11_051	'WICHITA (WICHT12X) 345/138/13.8KV TRANSFORMER CKT 1'	440	0.033	103.47	'BENTON - WICHITA 345KV CKT 1'
12WP	00NR	0	'FROM->TO'	G11_051	'ELK CITY 230KV (ELKCTY-6) 230/138/13.8KV TRANSFORMER CKT 1'	287	0.033	117.85	'DBL-MATT-TAT'
12WP	00NR	0	'FROM->TO'	G11_051	'ELK CITY 230KV (ELKCTY-6) 230/138/13.8KV TRANSFORMER CKT 1'	287	0.033	117.17	'DBL-MATT-TAT'
12WP	00NR	0	'FROM->TO'	G11_051	'ELK CITY 230KV (ELKCTY-6) 230/138/13.8KV TRANSFORMER CKT 1'	287	0.033	112.05	'G11_051T 345.00 - TATONGA7 345.00 345KV CKT 1'
12WP	00NR	0	'FROM->TO'	G11_051	'ELK CITY 230KV (ELKCTY-6) 230/138/13.8KV TRANSFORMER CKT 1'	287	0.033	111.42	'G11_051T 345.00 - TATONGA7 345.00 345KV CKT 1'
12WP	00NR	0	'FROM->TO'	G11_051	'GRAPEVINE INTERCHANGE - STATELINE INTERCHANGE 230KV CKT 1'	361	0.033	103.29	'DBL-MATT-TAT'
17WP	00NR	0	'FROM->TO'	G11_051	'ELK CITY 230KV (ELKCTY-6) 230/138/13.8KV TRANSFORMER CKT 1'	287	0.033	104.59	'DBL-MATT-TAT'
17WP	00NR	0	'FROM->TO'	G11_051	'ELK CITY 230KV (ELKCTY-6) 230/138/13.8KV TRANSFORMER CKT 1'	287	0.033	104.35	'DBL-MATT-TAT'
13WP	00NR	0	'FROM->TO'	G11_051	'ELK CITY 230KV (ELKCTY-6) 230/138/13.8KV TRANSFORMER CKT 1'	287	0.033	116.15	'DBL-MATT-TAT'
13WP	00NR	0	'FROM->TO'	G11_051	'ELK CITY 230KV (ELKCTY-6) 230/138/13.8KV TRANSFORMER CKT 1'	287	0.033	115.47	'DBL-MATT-TAT'
13WP	00NR	0	'FROM->TO'	G11_051	'ELK CITY 230KV (ELKCTY-6) 230/138/13.8KV TRANSFORMER CKT 1'	287	0.033	110.68	'G11_051T 345.00 - TATONGA7 345.00 345KV CKT 1'
13WP	00NR	0	'FROM->TO'	G11_051	'ELK CITY 230KV (ELKCTY-6) 230/138/13.8KV TRANSFORMER CKT 1'	287	0.033	110.09	'G11_051T 345.00 - TATONGA7 345.00 345KV CKT 1'
13WP	00NR	0	'FROM->TO'	G11_051	'GRAPEVINE INTERCHANGE - STATELINE INTERCHANGE 230KV CKT 1'	361	0.033	101.36	'DBL-MATT-TAT'
13WP	00NR	0	'FROM->TO'	G11_051	'NORTHWEST (NORTWST2) 345/138/13.8KV TRANSFORMER CKT 1'	493	0.033	102.30	'NORTHWEST (NORTWST3) 345/138/13.8KV TRANSFORMER CKT 1'
17WP	00NR	0	'FROM->TO'	G11_051	'WICHITA (WICHT12X) 345/138/13.8KV TRANSFORMER CKT 1'	440	0.032	100.91	'BENTON - WICHITA 345KV CKT 1'
17WP	00NR	0	'FROM->TO'	G11_051	'WICHITA (WICHT12X) 345/138/13.8KV TRANSFORMER CKT 1'	440	0.032	100.17	'BENTON - WICHITA 345KV CKT 1'
17SP	00NR	0	'FROM->TO'	G11_051	'WICHITA (WICHT12X) 345/138/13.8KV TRANSFORMER CKT 1'	440	0.032	107.52	'BENTON - WICHITA 345KV CKT 1'
17SP	00NR	0	'FROM->TO'	G11_051	'WICHITA (WICHT12X) 345/138/13.8KV TRANSFORMER CKT 1'	440	0.032	106.09	'BENTON - WICHITA 345KV CKT 1'
12WP	00NR	0	'FROM->TO'	G11_051	'CLEO CORNER - MEN TAP 138KV CKT 1'	191	0.031	100.70	'DBL-WICH-THI'
12G	01NR	0	'TO->FROM'	G11_051	'GLASS MOUNTAIN - MOORELAND 138KV CKT 1'	152	0.030	103.91	'DBL-THIS-WWR'
12G	01NR	0	'TO->FROM'	G11_051	'CLEO CORNER - GLASS MOUNTAIN 138KV CKT 1'	153	0.030	100.06	'DBL-THIS-WWR'
12WP	00NR	0	'FROM->TO'	G11_051	'CIMARRON - CZECH HALL 138KV CKT 1'	382	0.030	100.76	'CIMARRON - HAYMAKER 138KV CKT 1'
13WP	00NR	0	'TO->FROM'	G11_051	'GLASS MOUNTAIN - MOORELAND 138KV CKT 1'	152	0.030	119.26	'DBL-THIS-WWR'
17WP	00NR	0	'TO->FROM'	G11_051	'GLASS MOUNTAIN - MOORELAND 138KV CKT 1'	152	0.030	114.45	'DBL-THIS-WWR'
12SP	00NR	2	'FROM->TO'	G11_051	'MATTHEWSON 345.00 - NORTHWEST 345KV CKT 1'	1195	0.466	120.76	'DBL-MATT-CIM'
13SP	00NR	2	'FROM->TO'	G11_051	'MATTHEWSON 345.00 - NORTHWEST 345KV CKT 1'	1195	0.464	120.38	'DBL-MATT-CIM'
17WP	00NR	2	'FROM->TO'	G11_051	'MATTHEWSON 345.00 - NORTHWEST 345KV CKT 1'	1195	0.441	140.13	'DBL-MATT-CIM'
13WP	00NR	2	'FROM->TO'	G11_051	'MATTHEWSON 345.00 - NORTHWEST 345KV CKT 1'	1195	0.440	147.63	'DBL-MATT-CIM'
12G	01NR	2	'FROM->TO'	G11_051	'MATTHEWSON 345.00 - NORTHWEST 345KV CKT 1'	1195	0.438	129.45	'DBL-MATT-CIM'
12G	01G11_051	2	'FROM->TO'	G11_051	'MATTHEWSON 345.00 - NORTHWEST 345KV CKT 1'	1195	0.339	123.63	'DBL-MATT-CIM'
12G	1	2	'FROM->TO'	G11_051	'MATTHEWSON 345.00 - NORTHWEST 345KV CKT 1'	1195	0.338	123.17	'DBL-MATT-CIM'

SEASON	GROUP	SCENARIO	DIRECTION	SOURCE	MONITORED ELEMENT	RATE B (MVA)	TDF	(%MVA) LOADING	CONTINGENCY
12G	3	2	'FROM->TO'	G11_051	'MATTHEWSON 345.00 - NORTHWEST 345KV CKT 1'	1195	0.332	120.55	'DBL-MATT-CIM'
12WP	00NR	2	'FROM->TO'	G11_051	'CIMARRON - DRAPER LAKE 345KV CKT 1'	717	0.196	119.41	'ARCADIA - NORTHWEST 345KV CKT 1'
13WP	00NR	2	'FROM->TO'	G11_051	'CIMARRON - DRAPER LAKE 345KV CKT 1'	717	0.184	124.03	'ARCADIA - NORTHWEST 345KV CKT 1'
17WP	00NR	2	'FROM->TO'	G11_051	'CIMARRON - DRAPER LAKE 345KV CKT 1'	717	0.177	110.71	'ARCADIA - NORTHWEST 345KV CKT 1'
12WP	00NR	2	'FROM->TO'	G11_051	'CIMARRON - DRAPER LAKE 345KV CKT 1'	717	0.157	112.19	'MATTHEWSON 345.00 - NORTHWEST 345KV CKT 1'
12WP	00NR	2	'FROM->TO'	G11_051	'CIMARRON - DRAPER LAKE 345KV CKT 1'	717	0.155	123.43	'LAWTON EASTSIDE - SUNNYSIDE 345KV CKT 1'
13WP	00NR	2	'FROM->TO'	G11_051	'CIMARRON - DRAPER LAKE 345KV CKT 1'	717	0.151	103.97	'G11_051T 345.00 - WOODWARD DISTRICT EHV 345KV CKT 1'
12G	01NR	2	'FROM->TO'	G11_051	'CIMARRON - DRAPER LAKE 345KV CKT 1'	717	0.150	100.94	'LAWTON EASTSIDE - SUNNYSIDE 345KV CKT 1'
12WP	00NR	2	'FROM->TO'	G11_051	'CIMARRON - DRAPER LAKE 345KV CKT 1'	717	0.150	114.69	'ARCADIA - HORSESHOE LAKE 345KV CKT 1'
12WP	00NR	2	'FROM->TO'	G11_051	'CIMARRON - DRAPER LAKE 345KV CKT 1'	717	0.150	114.68	'HORSESHOE LAKE - SEMINOLE 345KV CKT 1'
13WP	00NR	2	'FROM->TO'	G11_051	'CIMARRON - DRAPER LAKE 345KV CKT 1'	717	0.149	116.37	'MATTHEWSON 345.00 - NORTHWEST 345KV CKT 1'
12WP	00NR	2	'FROM->TO'	G11_051	'CIMARRON - DRAPER LAKE 345KV CKT 1'	717	0.148	105.74	'MATTHEWSON 345.00 - WOODRING 345KV CKT 1'
12WP	00NR	2	'FROM->TO'	G11_051	'CIMARRON - DRAPER LAKE 345KV CKT 1'	717	0.147	105.74	'CIMARRON - NORTHWEST 345KV CKT 1'
12WP	00NR	2	'FROM->TO'	G11_051	'CIMARRON - DRAPER LAKE 345KV CKT 1'	717	0.147	104.95	'SOONER - WOODRING 345KV CKT 1'
17WP	00NR	2	'FROM->TO'	G11_051	'CIMARRON - DRAPER LAKE 345KV CKT 1'	717	0.147	106.61	'MATTHEWSON 345.00 - NORTHWEST 345KV CKT 1'
12WP	00NR	2	'FROM->TO'	G11_051	'CIMARRON - DRAPER LAKE 345KV CKT 1'	717	0.147	114.88	'CLEVELAND - SOONER 345KV CKT 1'
13WP	00NR	2	'FROM->TO'	G11_051	'CIMARRON - DRAPER LAKE 345KV CKT 1'	717	0.146	127.80	'LAWTON EASTSIDE - SUNNYSIDE 345KV CKT 1'
12WP	00NR	2	'FROM->TO'	G11_051	'CIMARRON - DRAPER LAKE 345KV CKT 1'	717	0.146	104.33	'NORTHWEST - SPRING CREEK 345KV CKT 1'
12WP	00NR	2	'FROM->TO'	G11_051	'CIMARRON - DRAPER LAKE 345KV CKT 1'	717	0.146	104.29	'SOONER - SPRING CREEK 345KV CKT 1'
12WP	00NR	2	'FROM->TO'	G11_051	'CIMARRON - DRAPER LAKE 345KV CKT 1'	717	0.146	109.60	'CIMARRON - SARA 138KV CKT 1'
12WP	00NR	2	'FROM->TO'	G11_051	'CIMARRON - DRAPER LAKE 345KV CKT 1'	717	0.146	108.36	'MCCLAIN - SARA 138KV CKT 1'
12WP	00NR	2	'FROM->TO'	G11_051	'CIMARRON - DRAPER LAKE 345KV CKT 1'	717	0.145	102.63	'PECAN CREEK - RIVERSIDE STATION 345KV CKT 1'
12WP	00NR	2	'FROM->TO'	G11_051	'CIMARRON - DRAPER LAKE 345KV CKT 1'	717	0.145	109.89	'CLEVELAND - TULSA NORTH 345KV CKT 1'
12WP	00NR	2	'FROM->TO'	G11_051	'CIMARRON - DRAPER LAKE 345KV CKT 1'	717	0.145	103.88	'JOHNSON COUNTY - PITTSBURG 345KV CKT 1'
12WP	00NR	2	'FROM->TO'	G11_051	'CIMARRON - DRAPER LAKE 345KV CKT 1'	717	0.145	105.49	'JOHNSON COUNTY - SUNNYSIDE 345KV CKT 1'
12WP	00NR	2	'FROM->TO'	G11_051	'CIMARRON - DRAPER LAKE 345KV CKT 1'	717	0.144	104.51	'THISTLE 7 345.00 - WOODWARD DISTRICT EHV 345KV CKT 1'
12WP	00NR	2	'FROM->TO'	G11_051	'CIMARRON - DRAPER LAKE 345KV CKT 1'	717	0.144	104.51	'THISTLE 7 345.00 - WOODWARD DISTRICT EHV 345KV CKT 2'
12WP	00NR	2	'FROM->TO'	G11_051	'CIMARRON - DRAPER LAKE 345KV CKT 1'	717	0.144	108.21	'CIMARRON - CZECH HALL 138KV CKT 1'
12WP	00NR	2	'FROM->TO'	G11_051	'CIMARRON - DRAPER LAKE 345KV CKT 1'	717	0.144	107.82	'CZECH HALL - XEROX 138KV CKT 1'
12WP	00NR	2	'FROM->TO'	G11_051	'CIMARRON - DRAPER LAKE 345KV CKT 1'	717	0.144	107.80	'MORGAN - XEROX 138KV CKT 1'
12WP	00NR	2	'FROM->TO'	G11_051	'CIMARRON - DRAPER LAKE 345KV CKT 1'	717	0.144	107.69	'MORGAN - MUSTANG 138KV CKT 1'
12WP	00NR	2	'FROM->TO'	G11_051	'CIMARRON - DRAPER LAKE 345KV CKT 1'	717	0.144	103.70	'CLARKSVILLE - ONETA 345KV CKT 1'
12WP	00NR	2	'FROM->TO'	G11_051	'CIMARRON - DRAPER LAKE 345KV CKT 1'	717	0.144	109.29	'CIMARRON (CIMARON1) 345/138/13.8KV TRANSFORMER CKT 1'
12WP	00NR	2	'FROM->TO'	G11_051	'CIMARRON - DRAPER LAKE 345KV CKT 1'	717	0.144	109.07	'CIMARRON (CIMARON2) 345/138/13.8KV TRANSFORMER CKT 1'
12WP	00NR	2	'FROM->TO'	G11_051	'CIMARRON - DRAPER LAKE 345KV CKT 1'	717	0.144	106.36	'LAWTON EASTSIDE - OKLAUNION 345KV CKT 1'
12WP	00NR	2	'FROM->TO'	G11_051	'CIMARRON - DRAPER LAKE 345KV CKT 1'	717	0.144	105.07	'G05-15T 345.00 - OKLAUNION 345KV CKT 1'
12WP	00NR	2	'FROM->TO'	G11_051	'CIMARRON - DRAPER LAKE 345KV CKT 1'	717	0.144	104.87	'G05-15T 345.00 - TUCO INTERCHANGE 345KV CKT 1'
12WP	00NR	2	'FROM->TO'	G11_051	'CIMARRON - DRAPER LAKE 345KV CKT 1'	717	0.144	104.64	'SUNSHINE CANYON - WESTMOORE 138KV CKT 1'
12WP	00NR	2	'FROM->TO'	G11_051	'CIMARRON - DRAPER LAKE 345KV CKT 1'	717	0.144	104.00	'FRANKLIN SW - WESTMOORE 138KV CKT 1'
12WP	00NR	2	'FROM->TO'	G11_051	'CIMARRON - DRAPER LAKE 345KV CKT 1'	717	0.143	101.72	'OAKCREEK - WILD MARY 138KV CKT 1'
12WP	00NR	2	'FROM->TO'	G11_051	'CIMARRON - DRAPER LAKE 345KV CKT 1'	717	0.143	101.44	'AIRDEPT4 138.00 - WILD MARY 138KV CKT 1'
12WP	00NR	2	'FROM->TO'	G11_051	'CIMARRON - DRAPER LAKE 345KV CKT 1'	717	0.143	101.43	'AIRDEPT4 138.00 - GM 138KV CKT 1'
12WP	00NR	2	'FROM->TO'	G11_051	'CIMARRON - DRAPER LAKE 345KV CKT 1'	717	0.143	101.18	'DRAPER LAKE - GM 138KV CKT 1'
12WP	00NR	2	'FROM->TO'	G11_051	'CIMARRON - DRAPER LAKE 345KV CKT 1'	717	0.143	106.80	'CANEYRV7 345.00 - NEOSHO 345KV CKT 1'
12WP	00NR	2	'FROM->TO'	G11_051	'CIMARRON - DRAPER LAKE 345KV CKT 1'	717	0.143	106.62	'CANEYRV7 345.00 - LATHAMS7 345.00 345KV CKT 1'
12WP	00NR	2	'FROM->TO'	G11_051	'CIMARRON - DRAPER LAKE 345KV CKT 1'	717	0.143	106.11	'LATHAMS7 345.00 - ROSE HILL 345KV CKT 1'
12WP	00NR	2	'FROM->TO'	G11_051	'CIMARRON - DRAPER LAKE 345KV CKT 1'	717	0.143	102.21	'DELAWARE - NORTHEAST STATION 345KV CKT 1'
12WP	00NR	2	'FROM->TO'	G11_051	'CIMARRON - DRAPER LAKE 345KV CKT 1'	717	0.143	104.36	'BLANCHARD - CORNVILLE 138KV CKT 1'
12WP	00NR	2	'FROM->TO'	G11_051	'CIMARRON - DRAPER LAKE 345KV CKT 1'	717	0.143	104.16	'BLANCHARD - MAUD 138KV CKT 1'
12WP	00NR	2	'FROM->TO'	G11_051	'CIMARRON - DRAPER LAKE 345KV CKT 1'	717	0.143	104.86	'NORTHEAST STATION - ONETA 345KV CKT 1'
12WP	00NR	2	'FROM->TO'	G11_051	'CIMARRON - DRAPER LAKE 345KV CKT 1'	717	0.143	101.74	'BEAVER CO 345.00 - WOODWARD DISTRICT EHV 345KV CKT 1'
12WP	00NR	2	'FROM->TO'	G11_051	'CIMARRON - DRAPER LAKE 345KV CKT 1'	717	0.143	102.29	'HOLLYWOOD - MIDWEST TAP 138KV CKT 1'
12WP	00NR	2	'FROM->TO'	G11_051	'CIMARRON - DRAPER LAKE 345KV CKT 1'	717	0.143	103.81	'BEAVER CO 345.00 - GRAY CO 345.00 345KV CKT 1'
12WP	00NR	2	'FROM->TO'	G11_051	'CIMARRON - DRAPER LAKE 345KV CKT 1'	717	0.143	105.00	'GRACEMONT - MINCO 345KV CKT 1'
12WP	00NR	2	'FROM->TO'	G11_051	'CIMARRON - DRAPER LAKE 345KV CKT 1'	717	0.143	104.62	'CIMARRON - MINCO 345KV CKT 1'
12WP	00NR	2	'FROM->TO'	G11_051	'CIMARRON - DRAPER LAKE 345KV CKT 1'	717	0.143	104.72	'36 & MERIDIAN - PENNSYLVANIA 138KV CKT 1'
12WP	00NR	2	'FROM->TO'	G11_051	'CIMARRON - DRAPER LAKE 345KV CKT 1'	717	0.143	100.23	'DRAPER LAKE (DRAPER2) 345/138/13.8KV TRANSFORMER CKT 1'
12WP	00NR	2	'FROM->TO'	G11_051	'CIMARRON - DRAPER LAKE 345KV CKT 1'	717	0.143	100.00	'DRAPER LAKE (DRAPER3) 345/138/13.8KV TRANSFORMER CKT 1'
12WP	00NR	2	'FROM->TO'	G11_051	'CIMARRON - DRAPER LAKE 345KV CKT 1'	717	0.143	100.00	'DRAPER LAKE (DRAPER4) 345/138/13.8KV TRANSFORMER CKT 1'
12WP	00NR	2	'FROM->TO'	G11_051	'CIMARRON - DRAPER LAKE 345KV CKT 1'	717	0.143	107.02	'NORTHWEST (NORTWST2) 345/138/13.8KV TRANSFORMER CKT 1'
13WP	00NR	2	'FROM->TO'	G11_051	'CIMARRON - DRAPER LAKE 345KV CKT 1'	717	0.143	111.40	'DBL-THIS-WWR'
12WP	00NR	2	'FROM->TO'	G11_051	'CIMARRON - DRAPER LAKE 345KV CKT 1'	717	0.143	106.34	'ANADARKO - POCASSETT 138KV CKT 1'
12WP	00NR	2	'FROM->TO'	G11_051	'CIMARRON - DRAPER LAKE 345KV CKT 1'	717	0.143	106.17	'POCASSETT - TUTTLE 138KV CKT 1'
12WP	00NR	2	'FROM->TO'	G11_051	'CIMARRON - DRAPER LAKE 345KV CKT 1'	717	0.143	105.73	'SUNSHINE CANYON - TUTTLE 138KV CKT 1'
12WP	00NR	2	'FROM->TO'	G11_051	'CIMARRON - DRAPER LAKE 345KV CKT 1'	717	0.143	104.39	'CLASSEN - ROBINSON 138KV CKT 1'
12WP	00NR	2	'FROM->TO'	G11_051	'CIMARRON - DRAPER LAKE 345KV CKT 1'	717	0.143	104.10	'LIGHTNING CREEK - ROBINSON 138KV CKT 1'
12WP	00NR	2	'FROM->TO'	G11_051	'CIMARRON - DRAPER LAKE 345KV CKT 1'	717	0.143	103.95	'LIGHTNING CREEK - TROSPER 138KV CKT 1'
12WP	00NR	2	'FROM->TO'	G11_051	'CIMARRON - DRAPER LAKE 345KV CKT 1'	717	0.143	106.23	'NORTHWEST (NORTWST3) 345/138/13.8KV TRANSFORMER CKT 1'
12WP	00NR	2	'FROM->TO'	G11_051	'CIMARRON - DRAPER LAKE 345KV CKT 1'	717	0.143	104.34	'MCCLAIN - PLEASANT VALLEY 138KV CKT 1'
12WP	00NR	2	'FROM->TO'	G11_051	'CIMARRON - DRAPER LAKE 345KV CKT 1'	717	0.143	102.38	'FOREST HILL - MAUD 138KV CKT 1'
12WP	00NR	2	'FROM->TO'	G11_051	'CIMARRON - DRAPER LAKE 345KV CKT 1'	717	0.143	102.75	'FOREST HILL - SQUIRL CREEK 138KV CKT 1'
12WP	00NR	2	'FROM->TO'	G11_051	'CIMARRON - DRAPER LAKE 345KV CKT 1'	717	0.143	105.14	'HORSESHOE LAKE - JONES TAP 138KV CKT 1'
12WP	00NR	2	'FROM->TO'	G11_051	'CIMARRON - DRAPER LAKE 345KV CKT 1'	717	0.143	104.68	'THISTLE 7 345.00 - WICHITA 345KV CKT 1'
12WP	00NR	2	'FROM->TO'	G11_051	'CIMARRON - DRAPER LAKE 345KV CKT 1'	717	0.143	104.68	'THISTLE 7 345.00 - WICHITA 345KV CKT 2'
17WP	00NR	2	'FROM->TO'	G11_051	'CIMARRON - DRAPER LAKE 345KV CKT 1'	717	0.143	115.56	'LAWTON EASTSIDE - SUNNYSIDE 345KV CKT 1'
12WP	00NR	2	'FROM->TO'	G11_051	'CIMARRON - DRAPER LAKE 345KV CKT 1'	717	0.143	104.43	'KETCH TAP - NORTHWEST 138KV CKT 1'
12WP	00NR	2	'FROM->TO'	G11_051	'CIMARRON - DRAPER LAKE 345KV CKT 1'	717	0.143	104.09	'GRAY CO 345.00 - SPEARVILLE 345KV CKT 1'
12WP	00NR	2	'FROM->TO'	G11_051	'CIMARRON - DRAPER LAKE 345KV CKT 1'	717	0.143	104.70	'QUAIL CREEK - SKYLINE 138KV CKT 1'

SEASON	GROUP	SCENARIO	DIRECTION	SOURCE	MONITORED ELEMENT	RATE B (MVA)	TDF	(%MVA) LOADING	CONTINGENCY
12WP	00NR	2	'FROM->TO'	G11_051	'CIMARRON - DRAPER LAKE 345KV CKT 1'	717	0.143	104.80	'CIMARRON - HAYMAKER 138KV CKT 1'
12WP	00NR	2	'FROM->TO'	G11_051	'CIMARRON - DRAPER LAKE 345KV CKT 1'	717	0.143	104.67	'DIVISION AVE - HAYMAKER 138KV CKT 1'
12WP	00NR	2	'FROM->TO'	G11_051	'CIMARRON - DRAPER LAKE 345KV CKT 1'	717	0.143	104.64	'MINGO - RED WILLOW 345KV CKT 1'
12WP	00NR	2	'FROM->TO'	G11_051	'CIMARRON - DRAPER LAKE 345KV CKT 1'	717	0.143	100.95	'CHAMBER SPRINGS - CLARKSVILLE 345KV CKT 1'
12WP	00NR	2	'FROM->TO'	G11_051	'CIMARRON - DRAPER LAKE 345KV CKT 1'	717	0.143	102.66	'MUSKOGEE - PECAN CREEK 345KV CKT 2'
12WP	00NR	2	'FROM->TO'	G11_051	'CIMARRON - DRAPER LAKE 345KV CKT 1'	717	0.142	102.14	'MAUD - SEMINOLE 138KV CKT 1'
12WP	00NR	2	'FROM->TO'	G11_051	'CIMARRON - DRAPER LAKE 345KV CKT 1'	717	0.142	106.08	'REDBUD - RIVERSIDE STATION 345KV CKT 1'
12WP	00NR	2	'FROM->TO'	G11_051	'CIMARRON - DRAPER LAKE 345KV CKT 1'	717	0.142	103.71	'SAPULPA ROAD - WEKIWA 345KV CKT 1'
12WP	00NR	2	'FROM->TO'	G11_051	'CIMARRON - DRAPER LAKE 345KV CKT 1'	717	0.142	104.31	'TULSA NORTH - WEKIWA 345KV CKT 1'
12WP	00NR	2	'FROM->TO'	G11_051	'CIMARRON - DRAPER LAKE 345KV CKT 1'	717	0.142	104.57	'MINGO - SETAB 345KV CKT 1'
12WP	00NR	2	'FROM->TO'	G11_051	'CIMARRON - DRAPER LAKE 345KV CKT 1'	717	0.142	102.46	'BORDER 7345.00 - WOODWARD DISTRICT EHV 345KV CKT 1'
12WP	00NR	2	'FROM->TO'	G11_051	'CIMARRON - DRAPER LAKE 345KV CKT 1'	717	0.142	104.06	'BENTON - WICHITA 345KV CKT 1'
12WP	00NR	2	'FROM->TO'	G11_051	'CIMARRON - DRAPER LAKE 345KV CKT 1'	717	0.142	101.30	'FT SMITH - MUSKOGEE 345KV CKT 1'
12WP	00NR	2	'FROM->TO'	G11_051	'CIMARRON - DRAPER LAKE 345KV CKT 1'	717	0.142	104.80	'MEMORIAL - SKYLINE 138KV CKT 1'
12WP	00NR	2	'FROM->TO'	G11_051	'CIMARRON - DRAPER LAKE 345KV CKT 1'	717	0.142	103.83	'FINNEY SWITCHING STATION - STEVENSCO 345.00 345KV CKT 1'
12WP	00NR	2	'FROM->TO'	G11_051	'CIMARRON - DRAPER LAKE 345KV CKT 1'	717	0.142	104.73	'LACYGNE - NEOSHO 345KV CKT 1'
12WP	00NR	2	'FROM->TO'	G11_051	'CIMARRON - DRAPER LAKE 345KV CKT 1'	717	0.142	105.23	'AXTELL - POST ROCK 345KV CKT 1'
12WP	00NR	2	'FROM->TO'	G11_051	'CIMARRON - DRAPER LAKE 345KV CKT 1'	717	0.142	102.57	'Hitchland Interchange - WOODWARD DISTRICT EHV 345KV CKT 2'
12WP	00NR	2	'FROM->TO'	G11_051	'CIMARRON - DRAPER LAKE 345KV CKT 1'	717	0.142	103.98	'MARSHALL - WOODRING 138KV CKT 1'
12WP	00NR	2	'FROM->TO'	G11_051	'CIMARRON - DRAPER LAKE 345KV CKT 1'	717	0.142	103.97	'COTTONWOOD CREEK - MARSHALL 138KV CKT 1'
12WP	00NR	2	'FROM->TO'	G11_051	'CIMARRON - DRAPER LAKE 345KV CKT 1'	717	0.142	104.17	'HOLCOMB - SETAB 345KV CKT 1'
12WP	00NR	2	'FROM->TO'	G11_051	'CIMARRON - DRAPER LAKE 345KV CKT 1'	717	0.142	104.44	'DIVISION AVE - LAKESIDE 138KV CKT 1'
12WP	00NR	2	'FROM->TO'	G11_051	'CIMARRON - DRAPER LAKE 345KV CKT 1'	717	0.142	104.31	'HEFNER - LAKESIDE 138KV CKT 1'
12WP	00NR	2	'FROM->TO'	G11_051	'CIMARRON - DRAPER LAKE 345KV CKT 1'	717	0.142	105.09	'G11-17T 345.00 - POST ROCK 345KV CKT 1'
12WP	00NR	2	'FROM->TO'	G11_051	'CIMARRON - DRAPER LAKE 345KV CKT 1'	717	0.142	101.98	'DRAPER LAKE - SOONER TAP 138KV CKT 1'
12WP	00NR	2	'FROM->TO'	G11_051	'CIMARRON - DRAPER LAKE 345KV CKT 1'	717	0.142	102.10	'PARK LANE - SEMINOLE 138KV CKT 1'
12WP	00NR	2	'FROM->TO'	G11_051	'CIMARRON - DRAPER LAKE 345KV CKT 1'	717	0.142	104.09	'KETCH - KETCH TAP 138KV CKT 1'
12WP	00NR	2	'FROM->TO'	G11_051	'CIMARRON - DRAPER LAKE 345KV CKT 1'	717	0.142	103.96	'CIVIT - PAOLI 138KV CKT 1'
12WP	00NR	2	'FROM->TO'	G11_051	'CIMARRON - DRAPER LAKE 345KV CKT 1'	717	0.142	103.91	'CIVIT - STRATFORD 138KV CKT 1'
12WP	00NR	2	'FROM->TO'	G11_051	'CIMARRON - DRAPER LAKE 345KV CKT 1'	717	0.142	103.86	'OIL CENTER - STRATFORD 138KV CKT 1'
12WP	00NR	2	'FROM->TO'	G11_051	'CIMARRON - DRAPER LAKE 345KV CKT 1'	717	0.142	103.79	'LATTA JCT - OIL CENTER 138KV CKT 1'
12WP	00NR	2	'FROM->TO'	G11_051	'CIMARRON - DRAPER LAKE 345KV CKT 1'	717	0.142	104.63	'CORN TAP - PAOLI 138KV CKT 1'
12WP	00NR	2	'FROM->TO'	G11_051	'CIMARRON - DRAPER LAKE 345KV CKT 1'	717	0.142	104.35	'EMPORIA ENERGY CENTER - WICHITA 345KV CKT 1'
12WP	00NR	2	'FROM->TO'	G11_051	'CIMARRON - DRAPER LAKE 345KV CKT 1'	717	0.142	106.90	'ANDERSONCO 345.00 - LACYGNE 345KV CKT 1'
12WP	00NR	2	'FROM->TO'	G11_051	'CIMARRON - DRAPER LAKE 345KV CKT 1'	717	0.142	106.77	'ANDERSONCO 345.00 - WOLF CREEK 345KV CKT 1'
12WP	00NR	2	'FROM->TO'	G11_051	'CIMARRON - DRAPER LAKE 345KV CKT 1'	717	0.142	103.90	'DAYTON - MUSTANG 138KV CKT 1'
12WP	00NR	2	'FROM->TO'	G11_051	'CIMARRON - DRAPER LAKE 345KV CKT 1'	717	0.142	103.89	'DAYTON - HOBBY LOBBY 138KV CKT 1'
12WP	00NR	2	'FROM->TO'	G11_051	'CIMARRON - DRAPER LAKE 345KV CKT 1'	717	0.142	103.84	'36 & MERIDIAN - HOBBY LOBBY 138KV CKT 1'
12WP	00NR	2	'FROM->TO'	G11_051	'CIMARRON - DRAPER LAKE 345KV CKT 1'	717	0.142	102.67	'ARBUCKLE - VANOSS 138KV CKT 1'
12WP	00NR	2	'FROM->TO'	G11_051	'CIMARRON - DRAPER LAKE 345KV CKT 1'	717	0.142	102.79	'PAOLI - SEMINOLE 138KV CKT 1'
12WP	00NR	2	'FROM->TO'	G11_051	'CIMARRON - DRAPER LAKE 345KV CKT 1'	717	0.142	102.71	'MAUD - SEMINOLE 138KV CKT 2'
12WP	00NR	2	'FROM->TO'	G11_051	'CIMARRON - DRAPER LAKE 345KV CKT 1'	717	0.142	104.61	'HUGO - SUNNYSIDE 345KV CKT 1'
12WP	00NR	2	'FROM->TO'	G11_051	'CIMARRON - DRAPER LAKE 345KV CKT 1'	717	0.142	104.21	'SWISSVALE - WEST GARDNER 345KV CKT 1'
12WP	00NR	2	'FROM->TO'	G11_051	'CIMARRON - DRAPER LAKE 345KV CKT 1'	717	0.142	104.30	'OVERTON-TRF'
12WP	00NR	2	'FROM->TO'	G11_051	'CIMARRON - DRAPER LAKE 345KV CKT 1'	717	0.142	104.38	'7OVERTON 345.00 - SIBLEY 345KV CKT 1'
12WP	00NR	2	'FROM->TO'	G11_051	'CIMARRON - DRAPER LAKE 345KV CKT 1'	717	0.142	102.57	'AI12'
12WP	00NR	2	'FROM->TO'	G11_051	'CIMARRON - DRAPER LAKE 345KV CKT 1'	717	0.142	102.57	'BROOKLINE - SUB 383 - MONETT 345KV CKT 1'
12WP	00NR	2	'FROM->TO'	G11_051	'CIMARRON - DRAPER LAKE 345KV CKT 1'	717	0.142	102.57	'FLINT CREEK - SUB 383 - MONETT 345KV CKT 1'
12WP	00NR	2	'FROM->TO'	G11_051	'CIMARRON - DRAPER LAKE 345KV CKT 1'	717	0.142	103.92	'ROSE HILL - SUMNERCO 345.00 345KV CKT 1'
12WP	00NR	2	'FROM->TO'	G11_051	'CIMARRON - DRAPER LAKE 345KV CKT 1'	717	0.142	103.88	'HAMMETT TAP - HORSESHOE LAKE 138KV CKT 1'
12WP	00NR	2	'FROM->TO'	G11_051	'CIMARRON - DRAPER LAKE 345KV CKT 1'	717	0.142	103.81	'CLINTON AIR FORCE BASE TAP - ELK CITY 138KV CKT 1'
12WP	00NR	2	'FROM->TO'	G11_051	'CIMARRON - DRAPER LAKE 345KV CKT 1'	717	0.142	103.80	'CLINTON AIR FORCE BASE TAP - HOBART JUNCTION 138KV CKT 1'
12WP	00NR	2	'FROM->TO'	G11_051	'CIMARRON - DRAPER LAKE 345KV CKT 1'	717	0.142	103.73	'HEALDTON - LOCO 138KV CKT 1'
12WP	00NR	2	'FROM->TO'	G11_051	'CIMARRON - DRAPER LAKE 345KV CKT 1'	717	0.142	103.71	'JEFFREY ENERGY CENTER - SUMMIT 345KV CKT 1'
12WP	00NR	2	'FROM->TO'	G11_051	'CIMARRON - DRAPER LAKE 345KV CKT 1'	717	0.142	104.31	'LONEOAK - NORTHWEST 138KV CKT 1'
12WP	00NR	2	'FROM->TO'	G11_051	'CIMARRON - DRAPER LAKE 345KV CKT 1'	717	0.142	103.99	'LONEOAK - QUAIL CREEK 138KV CKT 1'
12WP	00NR	2	'FROM->TO'	G11_051	'CIMARRON - DRAPER LAKE 345KV CKT 1'	717	0.142	103.66	'CHERRY CREEK - PLEASANT VALLEY 138KV CKT 1'
12WP	00NR	2	'FROM->TO'	G11_051	'CIMARRON - DRAPER LAKE 345KV CKT 1'	717	0.142	103.84	'CLEO CORNER - MEN TAP 138KV CKT 1'
12WP	00NR	2	'FROM->TO'	G11_051	'CIMARRON - DRAPER LAKE 345KV CKT 1'	717	0.142	103.83	'IMO TAP - MEN TAP 138KV CKT 1'
12WP	00NR	2	'FROM->TO'	G11_051	'CIMARRON - DRAPER LAKE 345KV CKT 1'	717	0.142	100.98	'FRANKLIN SW - MIDWEST TAP 138KV CKT 1'
12WP	00NR	2	'FROM->TO'	G11_051	'CIMARRON - DRAPER LAKE 345KV CKT 1'	717	0.142	103.73	'EL RENO SW - MUSTANG 69KV CKT 1'
12WP	00NR	2	'FROM->TO'	G11_051	'CIMARRON - DRAPER LAKE 345KV CKT 1'	717	0.142	104.93	'WRTOD400'
12WP	00NR	2	'FROM->TO'	G11_051	'CIMARRON - DRAPER LAKE 345KV CKT 1'	717	0.142	102.69	'SEMINOLE - VANOSS 138KV CKT 1'
12WP	00NR	2	'FROM->TO'	G11_051	'CIMARRON - DRAPER LAKE 345KV CKT 1'	717	0.142	104.84	'HOYT - JEFFREY ENERGY CENTER 345KV CKT 1'
12WP	00NR	2	'FROM->TO'	G11_051	'CIMARRON - DRAPER LAKE 345KV CKT 1'	717	0.142	104.43	'HOYT - STRANGER CREEK 345KV CKT 1'
12WP	00NR	2	'FROM->TO'	G11_051	'CIMARRON - DRAPER LAKE 345KV CKT 1'	717	0.142	104.00	'COMANCHE - LOCO 138KV CKT 1'
12WP	00NR	2	'FROM->TO'	G11_051	'CIMARRON - DRAPER LAKE 345KV CKT 1'	717	0.142	103.95	'EMPORIA ENERGY CENTER - SWISSVALE 345KV CKT 1'
12WP	00NR	2	'FROM->TO'	G11_051	'CIMARRON - DRAPER LAKE 345KV CKT 1'	717	0.142	103.75	'ANADARKO - BLANCHARD 69KV CKT 1'
12WP	00NR	2	'FROM->TO'	G11_051	'CIMARRON - DRAPER LAKE 345KV CKT 1'	717	0.142	103.84	'CLEO CORNER - GLASS MOUNTAIN 138KV CKT 1'
12WP	00NR	2	'FROM->TO'	G11_051	'CIMARRON - DRAPER LAKE 345KV CKT 1'	717	0.142	103.82	'GLASS MOUNTAIN - MOORELAND 138KV CKT 1'
12WP	00NR	2	'FROM->TO'	G11_051	'CIMARRON - DRAPER LAKE 345KV CKT 1'	717	0.142	103.82	'RENO COUNTY - SUMMIT 345KV CKT 1'
12WP	00NR	2	'FROM->TO'	G11_051	'CIMARRON - DRAPER LAKE 345KV CKT 1'	717	0.142	103.82	'OUMED 4 - STONEWALL 138KV CKT 1'
12WP	00NR	2	'FROM->TO'	G11_051	'CIMARRON - DRAPER LAKE 345KV CKT 1'	717	0.142	103.74	'OUMED 4 - PARK PLACE 138KV CKT 1'
12WP	00NR	2	'FROM->TO'	G11_051	'CIMARRON - DRAPER LAKE 345KV CKT 1'	717	0.142	104.16	'DIVISION AVE - MUSTANG 138KV CKT 1'
12WP	00NR	2	'FROM->TO'	G11_051	'CIMARRON - DRAPER LAKE 345KV CKT 1'	717	0.142	103.76	'BROOKLINE - MORGAN 345KV CKT 1'
12WP	00NR	2	'FROM->TO'	G11_051	'CIMARRON - DRAPER LAKE 345KV CKT 1'	717	0.142	103.69	'5LOCSTGV - MAID 161KV CKT 1'
12WP	00NR	2	'FROM->TO'	G11_051	'CIMARRON - DRAPER LAKE 345KV CKT 1'	717	0.142	103.68	'5CDRCRST 161.00 - 5LOCSTGV 161KV CKT 1'
12WP	00NR	2	'FROM->TO'	G11_051	'CIMARRON - DRAPER LAKE 345KV CKT 1'	717	0.142	104.47	'7JASPER 345.00 - MORGAN 345KV CKT 1'

SEASON	GROUP	SCENARIO	DIRECTION	SOURCE	MONITORED ELEMENT	RATE B (MVA)	TDF	(%MVA) LOADING	CONTINGENCY
12WP	00NR	2	'FROM->TO'	G11_051	'CIMARRON - DRAPER LAKE 345KV CKT 1'	717	0.142	104.19	'HUGO - VALLIANT 345KV CKT 1'
12WP	00NR	2	'FROM->TO'	G11_051	'CIMARRON - DRAPER LAKE 345KV CKT 1'	717	0.142	104.18	'NORTHWEST - PANTHER 138KV CKT 1'
12WP	00NR	2	'FROM->TO'	G11_051	'CIMARRON - DRAPER LAKE 345KV CKT 1'	717	0.142	104.15	'PANTHER - SILVER LAKE 138KV CKT 1'
12WP	00NR	2	'FROM->TO'	G11_051	'CIMARRON - DRAPER LAKE 345KV CKT 1'	717	0.142	102.29	'KEO EHV - WEST MEMPHIS 500 500KV CKT 1'
12WP	00NR	2	'FROM->TO'	G11_051	'CIMARRON - DRAPER LAKE 345KV CKT 1'	717	0.142	103.70	'COUNCIL - MUSTANG 138KV CKT 1'
12WP	00NR	2	'FROM->TO'	G11_051	'CIMARRON - DRAPER LAKE 345KV CKT 1'	717	0.142	104.02	'AXTELL - PAULINE 345KV CKT 1'
12WP	00NR	2	'FROM->TO'	G11_051	'CIMARRON - DRAPER LAKE 345KV CKT 1'	717	0.142	104.03	'CLEVELAND (CLVAUTO1) 345/138/13.8KV TRANSFORMER CKT 1'
12WP	00NR	2	'FROM->TO'	G11_051	'CIMARRON - DRAPER LAKE 345KV CKT 1'	717	0.142	104.72	'7JASPER 345.00 - NEOSHO 345KV CKT 1'
12WP	00NR	2	'FROM->TO'	G11_051	'CIMARRON - DRAPER LAKE 345KV CKT 1'	717	0.142	104.27	'GRAND ISLAND - SWEETWATER 345KV CKT 1'
12WP	00NR	2	'FROM->TO'	G11_051	'CIMARRON - DRAPER LAKE 345KV CKT 1'	717	0.142	103.86	'MOORE - PAULINE 345KV CKT 1'
12WP	00NR	2	'FROM->TO'	G11_051	'CIMARRON - DRAPER LAKE 345KV CKT 1'	717	0.142	102.74	'DISCVRY - FOSTER 138KV CKT 1'
12WP	00NR	2	'FROM->TO'	G11_051	'CIMARRON - DRAPER LAKE 345KV CKT 1'	717	0.142	102.66	'AMRN_OUTS5'
12WP	00NR	2	'FROM->TO'	G11_051	'CIMARRON - DRAPER LAKE 345KV CKT 1'	717	0.142	102.57	'DISCVRY - OAKCREEK 138KV CKT 1'
12WP	00NR	2	'FROM->TO'	G11_051	'CIMARRON - DRAPER LAKE 345KV CKT 1'	717	0.142	103.99	'SPP-SWPS-03'
12WP	00NR	2	'FROM->TO'	G11_051	'CIMARRON - DRAPER LAKE 345KV CKT 1'	717	0.142	104.07	'ELK CITY 230KV - SWEETWATER 230KV CKT 1'
12WP	00NR	2	'FROM->TO'	G11_051	'CIMARRON - DRAPER LAKE 345KV CKT 1'	717	0.142	104.07	'ELK CITY 230KV (ELKCTY-6) 230/138/13.8KV TRANSFORMER CKT 1'
12WP	00NR	2	'FROM->TO'	G11_051	'CIMARRON - DRAPER LAKE 345KV CKT 1'	717	0.142	103.96	'GRAPEVINE INTERCHANGE - STATELINE INTERCHANGE 230KV CKT 1'
12WP	00NR	2	'FROM->TO'	G11_051	'CIMARRON - DRAPER LAKE 345KV CKT 1'	717	0.142	103.89	'SPP-SWPS-02'
12WP	00NR	2	'FROM->TO'	G11_051	'CIMARRON - DRAPER LAKE 345KV CKT 1'	717	0.142	103.71	'HEFNER - TULSA 138KV CKT 1'
12WP	00NR	2	'FROM->TO'	G11_051	'CIMARRON - DRAPER LAKE 345KV CKT 1'	717	0.142	102.24	'DELL 500 - INDEPENDENCE 500KV CKT 1'
12WP	00NR	2	'FROM->TO'	G11_051	'CIMARRON - DRAPER LAKE 345KV CKT 1'	717	0.142	103.93	'ANADARKO - GEORGIA 138KV CKT 1'
12WP	00NR	2	'FROM->TO'	G11_051	'CIMARRON - DRAPER LAKE 345KV CKT 1'	717	0.142	103.88	'FLETCHER - GEORGIA 138KV CKT 1'
12WP	00NR	2	'FROM->TO'	G11_051	'CIMARRON - DRAPER LAKE 345KV CKT 1'	717	0.142	103.75	'EMPIRE - FLETCHER 138KV CKT 1'
12WP	00NR	2	'FROM->TO'	G11_051	'CIMARRON - DRAPER LAKE 345KV CKT 1'	717	0.142	103.69	'COMANCHE - EMPIRE 138KV CKT 1'
12WP	00NR	2	'FROM->TO'	G11_051	'CIMARRON - DRAPER LAKE 345KV CKT 1'	717	0.142	103.89	'EL RENO - ROMAN NOSE 138KV CKT 1'
12WP	00NR	2	'FROM->TO'	G11_051	'CIMARRON - DRAPER LAKE 345KV CKT 1'	717	0.142	103.85	'ROMAN NOSE - SOUTHARD 138KV CKT 1'
12WP	00NR	2	'FROM->TO'	G11_051	'CIMARRON - DRAPER LAKE 345KV CKT 1'	717	0.142	103.83	'DEWEY - SOUTHARD 138KV CKT 1'
12WP	00NR	2	'FROM->TO'	G11_051	'CIMARRON - DRAPER LAKE 345KV CKT 1'	717	0.142	103.80	'NEOSHO (NEOSHO2X) 345/161/13.8KV TRANSFORMER CKT 1'
12WP	00NR	2	'FROM->TO'	G11_051	'CIMARRON - DRAPER LAKE 345KV CKT 1'	717	0.142	102.65	'OSAGE - WEBB CITY TAP 138KV CKT 1'
12WP	00NR	2	'FROM->TO'	G11_051	'CIMARRON - DRAPER LAKE 345KV CKT 1'	717	0.142	102.47	'FAIRFAX TAP - WEBB CITY TAP 138KV CKT 1'
12WP	00NR	2	'FROM->TO'	G11_051	'CIMARRON - DRAPER LAKE 345KV CKT 1'	717	0.142	103.99	'AI43'
12WP	00NR	2	'FROM->TO'	G11_051	'CIMARRON - DRAPER LAKE 345KV CKT 1'	717	0.142	103.99	'7LUTESVIL 345.00 - 7ST FRANC 345.00 345KV CKT 1'
12WP	00NR	2	'FROM->TO'	G11_051	'CIMARRON - DRAPER LAKE 345KV CKT 1'	717	0.142	102.64	'ARKANSAS NUCLEAR ONE - PLEASANT HILL 500KV CKT 1'
12WP	00NR	2	'FROM->TO'	G11_051	'CIMARRON - DRAPER LAKE 345KV CKT 1'	717	0.142	104.14	'GRACEMONT (BANK 1) 345/138/13.8KV TRANSFORMER CKT 1'
12WP	00NR	2	'FROM->TO'	G11_051	'CIMARRON - DRAPER LAKE 345KV CKT 1'	717	0.142	103.89	'CLINTON - MONTROSE 161KV CKT 1'
12WP	00NR	2	'FROM->TO'	G11_051	'CIMARRON - DRAPER LAKE 345KV CKT 1'	717	0.142	103.69	'AI13'
12WP	00NR	2	'FROM->TO'	G11_051	'CIMARRON - DRAPER LAKE 345KV CKT 1'	717	0.142	102.65	'G11_040_TAP 138.00 - POOLEVILLE 138KV CKT 1'
12WP	00NR	2	'FROM->TO'	G11_051	'CIMARRON - DRAPER LAKE 345KV CKT 1'	717	0.142	103.95	'HAMMETT TAP - HAMMETT2 138KV CKT 1'
12WP	00NR	2	'FROM->TO'	G11_051	'CIMARRON - DRAPER LAKE 345KV CKT 1'	717	0.142	103.84	'HAMMETT2 - MEEKER 138KV CKT 1'
12WP	00NR	2	'FROM->TO'	G11_051	'CIMARRON - DRAPER LAKE 345KV CKT 1'	717	0.142	102.80	'ROSE HILL - WOLF CREEK 345KV CKT 1'
12WP	00NR	2	'FROM->TO'	G11_051	'CIMARRON - DRAPER LAKE 345KV CKT 1'	717	0.142	104.23	'FAIRFAX TAP - SHIDLER 138KV CKT 1'
12WP	00NR	2	'FROM->TO'	G11_051	'CIMARRON - DRAPER LAKE 345KV CKT 1'	717	0.142	104.20	'SHIDLER - WEST PAWHUSKA 138KV CKT 1'
12WP	00NR	2	'FROM->TO'	G11_051	'CIMARRON - DRAPER LAKE 345KV CKT 1'	717	0.142	104.19	'PAWHUSKA TAP - WEST PAWHUSKA 138KV CKT 1'
12WP	00NR	2	'FROM->TO'	G11_051	'CIMARRON - DRAPER LAKE 345KV CKT 1'	717	0.142	104.15	'DOMES - PAWHUSKA TAP 138KV CKT 1'
12WP	00NR	2	'FROM->TO'	G11_051	'CIMARRON - DRAPER LAKE 345KV CKT 1'	717	0.142	104.12	'DOMES - MOUND ROAD 138KV CKT 1'
12WP	00NR	2	'FROM->TO'	G11_051	'CIMARRON - DRAPER LAKE 345KV CKT 1'	717	0.142	103.68	'FRANKS - SALEM 345KV CKT 1'
12WP	00NR	2	'FROM->TO'	G11_051	'CIMARRON - DRAPER LAKE 345KV CKT 1'	717	0.142	103.68	'ATC_B2_8E2'
12WP	00NR	2	'FROM->TO'	G11_051	'CIMARRON - DRAPER LAKE 345KV CKT 1'	717	0.142	104.10	'WEBRE - WELLS 500KV CKT 1'
12WP	00NR	2	'FROM->TO'	G11_051	'CIMARRON - DRAPER LAKE 345KV CKT 1'	717	0.142	103.82	'ATCHSNT3 345.00 - BOONEVILLE 345KV CKT 1'
12WP	00NR	2	'FROM->TO'	G11_051	'CIMARRON - DRAPER LAKE 345KV CKT 1'	717	0.142	103.76	'ATCHSNT3 345.00 - COOPER 345KV CKT 1'
12WP	00NR	2	'FROM->TO'	G11_051	'CIMARRON - DRAPER LAKE 345KV CKT 1'	717	0.142	103.73	'SHERIDAN EHV - WHITE BLUFF 500KV CKT 1'
12WP	00NR	2	'FROM->TO'	G11_051	'CIMARRON - DRAPER LAKE 345KV CKT 1'	717	0.142	104.11	'8DANIEL 500.00 - MCKNIGHT 500KV CKT 1'
12WP	00NR	2	'FROM->TO'	G11_051	'CIMARRON - DRAPER LAKE 345KV CKT 1'	717	0.142	104.10	'DOLET HILLS - SOUTHWEST SHREVEPORT 345KV CKT 1'
12WP	00NR	2	'FROM->TO'	G11_051	'CIMARRON - DRAPER LAKE 345KV CKT 1'	717	0.142	102.74	'BAXTER WILSON SES - RAY BRASWELL SES 500KV CKT 1'
12WP	00NR	2	'FROM->TO'	G11_051	'CIMARRON - DRAPER LAKE 345KV CKT 1'	717	0.142	102.41	'DOLET HILLS 345/230KV TRANSFORMER CKT 1'
12WP	00NR	2	'FROM->TO'	G11_051	'CIMARRON - DRAPER LAKE 345KV CKT 1'	717	0.142	101.99	'LYDIA - WELSH 345KV CKT 1'
12WP	00NR	2	'FROM->TO'	G11_051	'CIMARRON - DRAPER LAKE 345KV CKT 1'	717	0.142	101.38	'LYDIA - VALLIANT 345KV CKT 1'
12WP	00NR	2	'FROM->TO'	G11_051	'CIMARRON - DRAPER LAKE 345KV CKT 1'	717	0.141	102.66	'LEBROCK - TENASKA RUSK COUNTY 345KV CKT 1'
12WP	00NR	2	'FROM->TO'	G11_051	'CIMARRON - DRAPER LAKE 345KV CKT 1'	717	0.141	102.65	'CROCKETT - TENASKA RUSK COUNTY 345KV CKT 1'
12WP	00NR	2	'FROM->TO'	G11_051	'CIMARRON - DRAPER LAKE 345KV CKT 1'	717	0.141	102.11	'NORTHWEST TEXARKANA - VALLIANT 345KV CKT 1'
12WP	00NR	2	'FROM->TO'	G11_051	'CIMARRON - DRAPER LAKE 345KV CKT 1'	717	0.141	112.24	'GEN336821 1-GRAND GULF UNIT'
12WP	00NR	2	'FROM->TO'	G11_051	'CIMARRON - DRAPER LAKE 345KV CKT 1'	717	0.141	111.75	'GEN336153 1-WATERFORD UNIT#3'
12WP	00NR	2	'FROM->TO'	G11_051	'CIMARRON - DRAPER LAKE 345KV CKT 1'	717	0.141	111.00	'GEN337911 1-ARKANSAS NUCLEAR ONE UNIT #2'
12WP	00NR	2	'FROM->TO'	G11_051	'CIMARRON - DRAPER LAKE 345KV CKT 1'	717	0.141	110.95	'GEN515042 1-SEMINOLE 3G'
12WP	00NR	2	'FROM->TO'	G11_051	'CIMARRON - DRAPER LAKE 345KV CKT 1'	717	0.141	110.70	'GEN335831 1-RIVERBEND UNIT#1'
12WP	00NR	2	'FROM->TO'	G11_051	'CIMARRON - DRAPER LAKE 345KV CKT 1'	717	0.141	109.97	'GEN501801 1-DOLET HILLS UNIT1'
12WP	00NR	2	'FROM->TO'	G11_051	'CIMARRON - DRAPER LAKE 345KV CKT 1'	717	0.141	109.97	'GEN515041 1-SEMINOLE 2G'
12WP	00NR	2	'FROM->TO'	G11_051	'CIMARRON - DRAPER LAKE 345KV CKT 1'	717	0.141	109.77	'GEN337910 1-ARKANSAS NUCLEAR ONE UNIT #1'
12WP	00NR	2	'FROM->TO'	G11_051	'CIMARRON - DRAPER LAKE 345KV CKT 1'	717	0.141	109.35	'GEN520947 1-HUGO1'
12WP	00NR	2	'FROM->TO'	G11_051	'CIMARRON - DRAPER LAKE 345KV CKT 1'	717	0.141	108.70	'GEN337652 1-WHITE BLUFF UNIT #1'
12WP	00NR	2	'FROM->TO'	G11_051	'CIMARRON - DRAPER LAKE 345KV CKT 1'	717	0.141	108.46	'GEN509403 1-PIRKEY GENERATION'
12WP	00NR	2	'FROM->TO'	G11_051	'CIMARRON - DRAPER LAKE 345KV CKT 1'	717	0.141	108.45	'GEN509416 1-TURK GENERATION'
12WP	00NR	2	'FROM->TO'	G11_051	'CIMARRON - DRAPER LAKE 345KV CKT 1'	717	0.141	108.30	'GEN336252 1-NINEMILE POINT UNIT#5'
12WP	00NR	2	'FROM->TO'	G11_051	'CIMARRON - DRAPER LAKE 345KV CKT 1'	717	0.141	108.28	'GEN515040 1-SEMINOLE 1G'
12WP	00NR	2	'FROM->TO'	G11_051	'CIMARRON - DRAPER LAKE 345KV CKT 1'	717	0.141	108.21	'GEN501813 1-RODEMACHER UNIT 3'
12WP	00NR	2	'FROM->TO'	G11_051	'CIMARRON - DRAPER LAKE 345KV CKT 1'	717	0.141	108.20	'GEN336251 1-NINEMILE POINT UNIT#4'
12WP	00NR	2	'FROM->TO'	G11_051	'CIMARRON - DRAPER LAKE 345KV CKT 1'	717	0.141	108.20	'GEN338146 1-INDEPENDENCE UNIT #2'
12WP	00NR	2	'FROM->TO'	G11_051	'CIMARRON - DRAPER LAKE 345KV CKT 1'	717	0.141	108.09	'GEN337041 1-GERALD ANDRUS'

SEASON	GROUP	SCENARIO	DIRECTION	SOURCE	MONITORED ELEMENT	RATE B (MVA)	TDF	(%MVA) LOADING	CONTINGENCY
12WP	00NR	2	'FROM->TO'	G11_051	'CIMARRON - DRAPER LAKE 345KV CKT 1'	717	0.141	108.07	'GEN337653 1-WHITE BLUFF UNIT #2'
12WP	00NR	2	'FROM->TO'	G11_051	'CIMARRON - DRAPER LAKE 345KV CKT 1'	717	0.141	108.07	'GEN338143 1-INDEPENDENCE UNIT #1'
12WP	00NR	2	'FROM->TO'	G11_051	'CIMARRON - DRAPER LAKE 345KV CKT 1'	717	0.141	107.57	'GEN501812 1-RODEMACHER UNIT 2'
12WP	00NR	2	'FROM->TO'	G11_051	'CIMARRON - DRAPER LAKE 345KV CKT 1'	717	0.141	107.51	'GEN509406 1-WELSH #3'
12WP	00NR	2	'FROM->TO'	G11_051	'CIMARRON - DRAPER LAKE 345KV CKT 1'	717	0.141	107.51	'GEN509405 1-WELSH #2'
12WP	00NR	2	'FROM->TO'	G11_051	'CIMARRON - DRAPER LAKE 345KV CKT 1'	717	0.141	107.51	'GEN509404 1-WELSH #1'
12WP	00NR	2	'FROM->TO'	G11_051	'CIMARRON - DRAPER LAKE 345KV CKT 1'	717	0.141	107.43	'GEN335206 1-NELSON UNIT 6'
12WP	00NR	2	'FROM->TO'	G11_051	'CIMARRON - DRAPER LAKE 345KV CKT 1'	717	0.141	107.22	'GEN336831 1-BAXTER WILSON SES'
12WP	00NR	2	'FROM->TO'	G11_051	'CIMARRON - DRAPER LAKE 345KV CKT 1'	717	0.141	107.18	'GEN334440 1-SABINE UNIT 4'
12WP	00NR	2	'FROM->TO'	G11_051	'CIMARRON - DRAPER LAKE 345KV CKT 1'	717	0.141	107.15	'GEN515226 1-MUSKOGEE 6G'
12WP	00NR	2	'FROM->TO'	G11_051	'CIMARRON - DRAPER LAKE 345KV CKT 1'	717	0.141	106.99	'GEN338388 1-1PLUMPT 23.000'
12WP	00NR	2	'FROM->TO'	G11_051	'CIMARRON - DRAPER LAKE 345KV CKT 1'	717	0.141	106.75	'GEN515223 1-MUSKOGEE 4G'
12WP	00NR	2	'FROM->TO'	G11_051	'CIMARRON - DRAPER LAKE 345KV CKT 1'	717	0.141	106.75	'GEN515225 1-MUSKOGEE 5G'
12WP	00NR	2	'FROM->TO'	G11_051	'CIMARRON - DRAPER LAKE 345KV CKT 1'	717	0.141	106.71	'GEN335204 1-NELSON UNIT 4'
12WP	00NR	2	'FROM->TO'	G11_051	'CIMARRON - DRAPER LAKE 345KV CKT 1'	717	0.141	106.66	'GEN336801 1-BAXTER WILSON UNIT #1'
12WP	00NR	2	'FROM->TO'	G11_051	'CIMARRON - DRAPER LAKE 345KV CKT 1'	717	0.141	106.63	'GEN334433 1-SABINE UNIT 3'
12WP	00NR	2	'FROM->TO'	G11_051	'CIMARRON - DRAPER LAKE 345KV CKT 1'	717	0.141	106.63	'GEN334441 1-SABINE UNIT 5'
12WP	00NR	2	'FROM->TO'	G11_051	'CIMARRON - DRAPER LAKE 345KV CKT 1'	717	0.141	105.44	'GEN336170 1-GULF OXY U4'
12WP	00NR	2	'FROM->TO'	G11_051	'CIMARRON - DRAPER LAKE 345KV CKT 1'	717	0.141	105.25	'GEN334070 1-LEWIS CREEK 1'
12WP	00NR	2	'FROM->TO'	G11_051	'CIMARRON - DRAPER LAKE 345KV CKT 1'	717	0.141	105.21	'GEN334071 1-LEWIS CREEK 2'
12WP	00NR	2	'FROM->TO'	G11_051	'CIMARRON - DRAPER LAKE 345KV CKT 1'	717	0.141	105.11	'GEN300006 1-NEW MADRID UNIT 1'
12WP	00NR	2	'FROM->TO'	G11_051	'CIMARRON - DRAPER LAKE 345KV CKT 1'	717	0.141	105.09	'GEN300007 1-NEW MADRID UNIT 2'
12WP	00NR	2	'FROM->TO'	G11_051	'CIMARRON - DRAPER LAKE 345KV CKT 1'	717	0.141	105.05	'GEN509394 1-FLINT CREEK'
12WP	00NR	2	'FROM->TO'	G11_051	'CIMARRON - DRAPER LAKE 345KV CKT 1'	717	0.141	104.92	'GEN512688 2-GRDA1 GSU2 22'
12WP	00NR	2	'FROM->TO'	G11_051	'CIMARRON - DRAPER LAKE 345KV CKT 1'	717	0.141	104.88	'GEN334432 1-SABINE UNIT 2'
12WP	00NR	2	'FROM->TO'	G11_051	'CIMARRON - DRAPER LAKE 345KV CKT 1'	717	0.141	104.88	'GEN334431 1-SABINE UNIT 1'
12WP	00NR	2	'FROM->TO'	G11_051	'CIMARRON - DRAPER LAKE 345KV CKT 1'	717	0.141	104.86	'GEN334030 1-FRONTIER UNIT 1'
12WP	00NR	2	'FROM->TO'	G11_051	'CIMARRON - DRAPER LAKE 345KV CKT 1'	717	0.141	104.86	'GEN334031 1-FRONTIER UNIT 2'
12WP	00NR	2	'FROM->TO'	G11_051	'CIMARRON - DRAPER LAKE 345KV CKT 1'	717	0.141	104.84	'GEN509393 S1-ARSENAL HILL GENS #4 (STALL)'
12WP	00NR	2	'FROM->TO'	G11_051	'CIMARRON - DRAPER LAKE 345KV CKT 1'	717	0.141	104.80	'GEN335612 1-WILLOW GLENN UNIT#2'
12WP	00NR	2	'FROM->TO'	G11_051	'CIMARRON - DRAPER LAKE 345KV CKT 1'	717	0.141	104.70	'GEN512689 1-GRDA1 GSU1 22'
12WP	00NR	2	'FROM->TO'	G11_051	'CIMARRON - DRAPER LAKE 345KV CKT 1'	717	0.141	104.70	'GEN509391 G1-ARSENAL HILL GENS #2 (STALL)'
12WP	00NR	2	'FROM->TO'	G11_051	'CIMARRON - DRAPER LAKE 345KV CKT 1'	717	0.141	104.70	'GEN509392 G2-ARSENAL HILL GENS #3 (STALL)'
12WP	00NR	2	'FROM->TO'	G11_051	'CIMARRON - DRAPER LAKE 345KV CKT 1'	717	0.141	104.58	'GEN503909 1-FULTONU1 1 16.000'
12WP	00NR	2	'FROM->TO'	G11_051	'CIMARRON - DRAPER LAKE 345KV CKT 1'	717	0.141	104.56	'GEN337428 1-PERYVILLE UNIT #1'
12WP	00NR	2	'FROM->TO'	G11_051	'CIMARRON - DRAPER LAKE 345KV CKT 1'	717	0.141	104.56	'GEN337430 1-PERYVILLE UNIT #3'
12WP	00NR	2	'FROM->TO'	G11_051	'CIMARRON - DRAPER LAKE 345KV CKT 1'	717	0.141	104.52	'GEN337429 1-PERYVILLE UNIT #2'
12WP	00NR	2	'FROM->TO'	G11_051	'CIMARRON - DRAPER LAKE 345KV CKT 1'	717	0.141	104.52	'GEN337432 1-PERYVILLE UNIT #5'
12WP	00NR	2	'FROM->TO'	G11_051	'CIMARRON - DRAPER LAKE 345KV CKT 1'	717	0.141	104.49	'GEN511840 1-NORTHEASTERN STATION #3'
12WP	00NR	2	'FROM->TO'	G11_051	'CIMARRON - DRAPER LAKE 345KV CKT 1'	717	0.141	104.48	'GEN511839 1-NORTHEASTERN STATION #2'
12WP	00NR	2	'FROM->TO'	G11_051	'CIMARRON - DRAPER LAKE 345KV CKT 1'	717	0.141	104.47	'GEN506752 1-LEBROCK GAS 1'
12WP	00NR	2	'FROM->TO'	G11_051	'CIMARRON - DRAPER LAKE 345KV CKT 1'	717	0.141	104.46	'GEN511841 1-NORTHEASTERN STATION #4'
12WP	00NR	2	'FROM->TO'	G11_051	'CIMARRON - DRAPER LAKE 345KV CKT 1'	717	0.141	104.44	'GEN335075 1-DYNEGY#1'
12WP	00NR	2	'FROM->TO'	G11_051	'CIMARRON - DRAPER LAKE 345KV CKT 1'	717	0.141	104.43	'GEN318007 1-5MOROW161 161.00'
12WP	00NR	2	'FROM->TO'	G11_051	'CIMARRON - DRAPER LAKE 345KV CKT 1'	717	0.141	104.43	'GEN336167 1-GULF OXY U1'
12WP	00NR	2	'FROM->TO'	G11_051	'CIMARRON - DRAPER LAKE 345KV CKT 1'	717	0.141	104.43	'GEN336168 1-GULF OXY U2'
12WP	00NR	2	'FROM->TO'	G11_051	'CIMARRON - DRAPER LAKE 345KV CKT 1'	717	0.141	104.43	'GEN336169 1-GULF OXY U3'
12WP	00NR	2	'FROM->TO'	G11_051	'CIMARRON - DRAPER LAKE 345KV CKT 1'	717	0.141	104.41	'GEN335203 1-NELSON UNIT 3'
12WP	00NR	2	'FROM->TO'	G11_051	'CIMARRON - DRAPER LAKE 345KV CKT 1'	717	0.141	104.36	'GEN334392 1-EXXON MOBIL IPP 1'
12WP	00NR	2	'FROM->TO'	G11_051	'CIMARRON - DRAPER LAKE 345KV CKT 1'	717	0.141	104.30	'GEN337006 1-DUKE MCADAMS G1'
12WP	00NR	2	'FROM->TO'	G11_051	'CIMARRON - DRAPER LAKE 345KV CKT 1'	717	0.141	104.30	'GEN337007 1-DUKE MCADAMS G2'
12WP	00NR	2	'FROM->TO'	G11_051	'CIMARRON - DRAPER LAKE 345KV CKT 1'	717	0.141	104.28	'GEN505432 1-SIKESTON'
12WP	00NR	2	'FROM->TO'	G11_051	'CIMARRON - DRAPER LAKE 345KV CKT 1'	717	0.141	104.28	'GEN337008 1-DUKE MCADAMS S1'
12WP	00NR	2	'FROM->TO'	G11_051	'CIMARRON - DRAPER LAKE 345KV CKT 1'	717	0.141	104.22	'GEN338500 1-MCCLELLAN UNIT #1'
12WP	00NR	2	'FROM->TO'	G11_051	'CIMARRON - DRAPER LAKE 345KV CKT 1'	717	0.141	104.15	'GEN515266 1-AES 1G'
12WP	00NR	2	'FROM->TO'	G11_051	'CIMARRON - DRAPER LAKE 345KV CKT 1'	717	0.141	104.15	'GEN515267 1-AES 2G'
12WP	00NR	2	'FROM->TO'	G11_051	'CIMARRON - DRAPER LAKE 345KV CKT 1'	717	0.141	104.11	'GEN337954 1-LYNCH UNIT #3'
12WP	00NR	2	'FROM->TO'	G11_051	'CIMARRON - DRAPER LAKE 345KV CKT 1'	717	0.141	104.11	'GEN511938 1-OEC STEAM # 1'
12WP	00NR	2	'FROM->TO'	G11_051	'CIMARRON - DRAPER LAKE 345KV CKT 1'	717	0.141	104.09	'GEN335611 1-WILLOW GLENN UNIT#1'
12WP	00NR	2	'FROM->TO'	G11_051	'CIMARRON - DRAPER LAKE 345KV CKT 1'	717	0.141	104.06	'GEN335201 1-NELSON UNIT 1'
12WP	00NR	2	'FROM->TO'	G11_051	'CIMARRON - DRAPER LAKE 345KV CKT 1'	717	0.141	104.05	'GEN335202 1-NELSON UNIT 2'
12WP	00NR	2	'FROM->TO'	G11_051	'CIMARRON - DRAPER LAKE 345KV CKT 1'	717	0.141	104.02	'GEN336944 1-REX BROWN'
12WP	00NR	2	'FROM->TO'	G11_051	'CIMARRON - DRAPER LAKE 345KV CKT 1'	717	0.141	104.01	'GEN334456 1-CONOCO UNIT#1'
12WP	00NR	2	'FROM->TO'	G11_051	'CIMARRON - DRAPER LAKE 345KV CKT 1'	717	0.141	103.99	'GEN506749 1-EASTMAN GENERATION A'
12WP	00NR	2	'FROM->TO'	G11_051	'CIMARRON - DRAPER LAKE 345KV CKT 1'	717	0.141	103.93	'GEN338510 1-1S1KNWRI'
12WP	00NR	2	'FROM->TO'	G11_051	'CIMARRON - DRAPER LAKE 345KV CKT 1'	717	0.141	103.93	'GEN338511 1-1C7KNWRI'
12WP	00NR	2	'FROM->TO'	G11_051	'CIMARRON - DRAPER LAKE 345KV CKT 1'	717	0.141	103.92	'GEN335137 C4-PPG'
12WP	00NR	2	'FROM->TO'	G11_051	'CIMARRON - DRAPER LAKE 345KV CKT 1'	717	0.141	103.92	'GEN338513 1-BAILEY UNIT #1'
12WP	00NR	2	'FROM->TO'	G11_051	'CIMARRON - DRAPER LAKE 345KV CKT 1'	717	0.141	103.87	'GEN300003 1-THOMAS HILL UNIT 3'
12WP	00NR	2	'FROM->TO'	G11_051	'CIMARRON - DRAPER LAKE 345KV CKT 1'	717	0.141	103.84	'GEN500915 3-WESTERN KRAFT'
12WP	00NR	2	'FROM->TO'	G11_051	'CIMARRON - DRAPER LAKE 345KV CKT 1'	717	0.141	103.84	'GEN300016 1-1G1GPDEL 18.000'
12WP	00NR	2	'FROM->TO'	G11_051	'CIMARRON - DRAPER LAKE 345KV CKT 1'	717	0.141	103.84	'GEN300017 1-1G2GPDEL 18.000'
12WP	00NR	2	'FROM->TO'	G11_051	'CIMARRON - DRAPER LAKE 345KV CKT 1'	717	0.141	103.82	'GEN501910 1-ACADIA UNIT ST1'
12WP	00NR	2	'FROM->TO'	G11_051	'CIMARRON - DRAPER LAKE 345KV CKT 1'	717	0.141	103.81	'GEN334467 1-DUPONT UNIT#1'
12WP	00NR	2	'FROM->TO'	G11_051	'CIMARRON - DRAPER LAKE 345KV CKT 1'	717	0.141	103.81	'GEN334335 1-TOLEDO BEND'
12WP	00NR	2	'FROM->TO'	G11_051	'CIMARRON - DRAPER LAKE 345KV CKT 1'	717	0.141	103.80	'GEN337124 5-LS POWER BATESVILLE'
12WP	00NR	2	'FROM->TO'	G11_051	'CIMARRON - DRAPER LAKE 345KV CKT 1'	717	0.141	103.80	'GEN503900 1-FITZHUGH CT1'
12WP	00NR	2	'FROM->TO'	G11_051	'CIMARRON - DRAPER LAKE 345KV CKT 1'	717	0.141	103.80	'GEN335546 3-DOW COGEN'

SEASON	GROUP	SCENARIO	DIRECTION	SOURCE	MONITORED ELEMENT	RATE B (MVA)	TDF	(%MVA) LOADING	CONTINGENCY
12WP	00NR	2	'FROM->TO'	G11_051	'CIMARRON - DRAPER LAKE 345KV CKT 1'	717	0.141	103.78	'GEN318008 3-5MOSEL161 161.00'
12WP	00NR	2	'FROM->TO'	G11_051	'CIMARRON - DRAPER LAKE 345KV CKT 1'	717	0.141	103.77	'GEN549893 2-SOUTHWEST 2'
12WP	00NR	2	'FROM->TO'	G11_051	'CIMARRON - DRAPER LAKE 345KV CKT 1'	717	0.141	103.76	'GEN336176 1-UNION CARBIDE COGEN GT1'
12WP	00NR	2	'FROM->TO'	G11_051	'CIMARRON - DRAPER LAKE 345KV CKT 1'	717	0.141	103.76	'GEN336177 1-UNION CARBIDE COGEN GT2'
12WP	00NR	2	'FROM->TO'	G11_051	'CIMARRON - DRAPER LAKE 345KV CKT 1'	717	0.141	103.73	'A059'
12WP	00NR	2	'FROM->TO'	G11_051	'CIMARRON - DRAPER LAKE 345KV CKT 1'	717	0.141	103.73	'EUREKA SPRIN'
12WP	00NR	2	'FROM->TO'	G11_051	'CIMARRON - DRAPER LAKE 345KV CKT 1'	717	0.141	103.69	'GEN335644 1-EXXON UNIT5'
12WP	00NR	2	'FROM->TO'	G11_051	'CIMARRON - DRAPER LAKE 345KV CKT 1'	717	0.141	103.21	'BASE CASE'
12WP	00NR	2	'FROM->TO'	G11_051	'CIMARRON - DRAPER LAKE 345KV CKT 1'	717	0.141	103.21	'NO5_GEN-NORTH OMAHA 5'
12WP	00NR	2	'FROM->TO'	G11_051	'CIMARRON - DRAPER LAKE 345KV CKT 1'	717	0.141	102.81	'DRAPER LAKE - DRPCAPS4 138.00 138KV CKT 1'
12WP	00NR	2	'FROM->TO'	G11_051	'CIMARRON - DRAPER LAKE 345KV CKT 1'	717	0.141	102.81	'GEN542957 1-IATAN UNIT #1'
12WP	00NR	2	'FROM->TO'	G11_051	'CIMARRON - DRAPER LAKE 345KV CKT 1'	717	0.141	102.80	'GEN542956 2-LACYGNE UNIT #2'
12WP	00NR	2	'FROM->TO'	G11_051	'CIMARRON - DRAPER LAKE 345KV CKT 1'	717	0.141	102.79	'GEN532663 1-LAWRENCE ENERGY CENTER UNIT 5'
12WP	00NR	2	'FROM->TO'	G11_051	'CIMARRON - DRAPER LAKE 345KV CKT 1'	717	0.141	102.77	'GEN542955 1-LACYGNE UNIT #1'
12WP	00NR	2	'FROM->TO'	G11_051	'CIMARRON - DRAPER LAKE 345KV CKT 1'	717	0.141	102.73	'GEN542962 2-IATAN UNIT #2'
12WP	00NR	2	'FROM->TO'	G11_051	'CIMARRON - DRAPER LAKE 345KV CKT 1'	717	0.141	102.50	'GEN527903 1-HOBBS PLANT #3 (ST)'
12WP	00NR	2	'FROM->TO'	G11_051	'CIMARRON - DRAPER LAKE 345KV CKT 1'	717	0.141	102.47	'WELSH - WILKES 345KV CKT 1'
12WP	00NR	2	'FROM->TO'	G11_051	'CIMARRON - DRAPER LAKE 345KV CKT 1'	717	0.141	102.43	'GEN523461 1-BLACKHAWK GEN #1'
12WP	00NR	2	'FROM->TO'	G11_051	'CIMARRON - DRAPER LAKE 345KV CKT 1'	717	0.141	102.43	'GEN523462 1-BLACKHAWK GEN #2'
12WP	00NR	2	'FROM->TO'	G11_051	'CIMARRON - DRAPER LAKE 345KV CKT 1'	717	0.141	102.40	'GEN560386 1-G10-029-1 0.6900'
12WP	00NR	2	'FROM->TO'	G11_051	'CIMARRON - DRAPER LAKE 345KV CKT 1'	717	0.141	102.40	'GEN560387 1-G10-029-2 0.6900'
12WP	00NR	2	'FROM->TO'	G11_051	'CIMARRON - DRAPER LAKE 345KV CKT 1'	717	0.141	102.40	'GEN560388 1-G10-029-3 0.6900'
12WP	00NR	2	'FROM->TO'	G11_051	'CIMARRON - DRAPER LAKE 345KV CKT 1'	717	0.141	102.30	'GEN532653 1-JEFFREY ENERGY CENTER UNIT 3'
12WP	00NR	2	'FROM->TO'	G11_051	'CIMARRON - DRAPER LAKE 345KV CKT 1'	717	0.141	102.28	'GEN532651 1-JEFFREY ENERGY CENTER UNIT 1'
12WP	00NR	2	'FROM->TO'	G11_051	'CIMARRON - DRAPER LAKE 345KV CKT 1'	717	0.141	102.26	'GEN532652 1-JEFFREY ENERGY CENTER UNIT 2'
12WP	00NR	2	'FROM->TO'	G11_051	'CIMARRON - DRAPER LAKE 345KV CKT 1'	717	0.141	102.24	'GEN527165 1-Mustang Gen #5'
12WP	00NR	2	'FROM->TO'	G11_051	'CIMARRON - DRAPER LAKE 345KV CKT 1'	717	0.141	102.24	'GEN527164 1-MUSTANG GEN #4 22 KV'
12WP	00NR	2	'FROM->TO'	G11_051	'CIMARRON - DRAPER LAKE 345KV CKT 1'	717	0.141	102.22	'GEN527901 1-HOBBS PLANT #1 (CT)'
12WP	00NR	2	'FROM->TO'	G11_051	'CIMARRON - DRAPER LAKE 345KV CKT 1'	717	0.141	102.21	'GEN527902 1-HOBBS PLANT #2 (CT)'
12WP	00NR	2	'FROM->TO'	G11_051	'CIMARRON - DRAPER LAKE 345KV CKT 1'	717	0.141	102.18	'GEN527163 1-MUSTANG GEN #3 22 KV'
12WP	00NR	2	'FROM->TO'	G11_051	'CIMARRON - DRAPER LAKE 345KV CKT 1'	717	0.141	102.16	'GEN527161 1-MUSTANG GEN #1'
12WP	00NR	2	'FROM->TO'	G11_051	'CIMARRON - DRAPER LAKE 345KV CKT 1'	717	0.141	102.15	'GEN527162 1-MUSTANG GEN #2'
12WP	00NR	2	'FROM->TO'	G11_051	'CIMARRON - DRAPER LAKE 345KV CKT 1'	717	0.141	102.08	'GEN560356 1-G10-53 0.6900'
12WP	00NR	2	'FROM->TO'	G11_051	'CIMARRON - DRAPER LAKE 345KV CKT 1'	717	0.141	102.03	'GEN520997 1-MORLND2'
12WP	00NR	2	'FROM->TO'	G11_051	'CIMARRON - DRAPER LAKE 345KV CKT 1'	717	0.141	102.02	'GEN560329 1-G10-45 0.6900'
12WP	00NR	2	'FROM->TO'	G11_051	'CIMARRON - DRAPER LAKE 345KV CKT 1'	717	0.141	101.96	'GEN520998 1-MORLND3'
12WP	00NR	2	'FROM->TO'	G11_051	'CIMARRON - DRAPER LAKE 345KV CKT 1'	717	0.141	101.84	'GEN514805 1-SOONER UNIT 1'
12WP	00NR	2	'FROM->TO'	G11_051	'CIMARRON - DRAPER LAKE 345KV CKT 1'	717	0.141	101.74	'GEN526333 1-JONES GEN #3 21 KV'
12WP	00NR	2	'FROM->TO'	G11_051	'CIMARRON - DRAPER LAKE 345KV CKT 1'	717	0.141	101.74	'GEN526334 1-JONES_4 116.500'
12WP	00NR	2	'FROM->TO'	G11_051	'CIMARRON - DRAPER LAKE 345KV CKT 1'	717	0.141	101.54	'GEN514806 1-SOONER UNIT 2'
12WP	00NR	2	'FROM->TO'	G11_051	'CIMARRON - DRAPER LAKE 345KV CKT 1'	717	0.141	101.31	'GEN531447 1-HOLCOMB GENERATOR'
12WP	00NR	2	'FROM->TO'	G11_051	'CIMARRON - DRAPER LAKE 345KV CKT 1'	717	0.141	100.78	'GEN523971 1-HARRINGTON GEN #1 24 KV'
12WP	00NR	2	'FROM->TO'	G11_051	'CIMARRON - DRAPER LAKE 345KV CKT 1'	717	0.141	100.69	'GEN523972 1-HARRINGTON GEN #2 24 KV'
12WP	00NR	2	'FROM->TO'	G11_051	'CIMARRON - DRAPER LAKE 345KV CKT 1'	717	0.141	100.68	'GEN523973 1-HARRINGTON GEN #3 24 KV'
12WP	00NR	2	'FROM->TO'	G11_051	'CIMARRON - DRAPER LAKE 345KV CKT 1'	717	0.141	100.29	'GEN560225 1-G10-43 18.000'
12WP	00NR	2	'FROM->TO'	G11_051	'CIMARRON - DRAPER LAKE 345KV CKT 1'	717	0.141	100.05	'GEN532751 1-WOLF CREEK GENERATING STATION UNIT 1'
12WP	00NR	2	'FROM->TO'	G11_051	'CIMARRON - DRAPER LAKE 345KV CKT 1'	717	0.141	104.04	'7SAREPT 345.00 - ELDORADO EHV 345KV CKT 1'
12WP	00NR	2	'FROM->TO'	G11_051	'CIMARRON - DRAPER LAKE 345KV CKT 1'	717	0.141	104.04	'A222'
12WP	00NR	2	'FROM->TO'	G11_051	'CIMARRON - DRAPER LAKE 345KV CKT 1'	717	0.141	104.04	'ELDORADO EHV 500/345KV TRANSFORMER CKT 1'
12WP	00NR	2	'FROM->TO'	G11_051	'CIMARRON - DRAPER LAKE 345KV CKT 1'	717	0.141	103.94	'7SAREPT 345.00 - LONGWOOD 345KV CKT 1'
12WP	00NR	2	'FROM->TO'	G11_051	'CIMARRON - DRAPER LAKE 345KV CKT 1'	717	0.141	103.66	'MAGNET COVE - SHERIDAN EHV 500KV CKT 1'
12WP	00NR	2	'FROM->TO'	G11_051	'CIMARRON - DRAPER LAKE 345KV CKT 1'	717	0.141	103.65	'LACYGNE - STILWELL 345KV CKT 1'
12WP	00NR	2	'FROM->TO'	G11_051	'CIMARRON - DRAPER LAKE 345KV CKT 1'	717	0.141	102.30	'FIXICO TAP - MAUD 138KV CKT 1'
12WP	00NR	2	'FROM->TO'	G11_051	'CIMARRON - DRAPER LAKE 345KV CKT 1'	717	0.141	104.01	'ELDORADO EHV - SHERIDAN EHV 500KV CKT 1'
12WP	00NR	2	'FROM->TO'	G11_051	'CIMARRON - DRAPER LAKE 345KV CKT 1'	717	0.141	103.74	'WOODRING (WOODRNG2) 345/138/13.8KV TRANSFORMER CKT 1'
12WP	00NR	2	'FROM->TO'	G11_051	'CIMARRON - DRAPER LAKE 345KV CKT 1'	717	0.141	102.55	'FIXICO TAP - WELEETKA 138KV CKT 1'
12WP	00NR	2	'FROM->TO'	G11_051	'CIMARRON - DRAPER LAKE 345KV CKT 1'	717	0.141	100.51	'BARNES 4 138.00 - DRAPER LAKE 138KV CKT 1'
12WP	00NR	2	'FROM->TO'	G11_051	'CIMARRON - DRAPER LAKE 345KV CKT 1'	717	0.141	105.19	'MORISNT4 138.00 - STILLWATER 138KV CKT 1'
12WP	00NR	2	'FROM->TO'	G11_051	'CIMARRON - DRAPER LAKE 345KV CKT 1'	717	0.141	104.47	'MCELROY - STILLWATER 138KV CKT 1'
12WP	00NR	2	'FROM->TO'	G11_051	'CIMARRON - DRAPER LAKE 345KV CKT 1'	717	0.141	104.23	'KINZE - MCELROY 138KV CKT 1'
12WP	00NR	2	'FROM->TO'	G11_051	'CIMARRON - DRAPER LAKE 345KV CKT 1'	717	0.141	105.09	'ARCADIA - KAMO MEMORIAL 138KV CKT 1'
12WP	00NR	2	'FROM->TO'	G11_051	'CIMARRON - DRAPER LAKE 345KV CKT 1'	717	0.141	103.81	'MORISNT4 138.00 - SOONER 138KV CKT 1'
12WP	00NR	2	'FROM->TO'	G11_051	'CIMARRON - DRAPER LAKE 345KV CKT 1'	717	0.141	103.80	'ARCADIA (ARCADIA3) 345/138/13.8KV TRANSFORMER CKT 1'
12WP	00NR	2	'FROM->TO'	G11_051	'CIMARRON - DRAPER LAKE 345KV CKT 1'	717	0.141	102.70	'HIGHLAND - PINK SW 138KV CKT 1'
12WP	00NR	2	'FROM->TO'	G11_051	'CIMARRON - DRAPER LAKE 345KV CKT 1'	717	0.141	103.86	'ARCADIA (ARCADIA2) 345/138/13.8KV TRANSFORMER CKT 1'
12WP	00NR	2	'FROM->TO'	G11_051	'CIMARRON - DRAPER LAKE 345KV CKT 1'	717	0.141	104.06	'ARCADIA - OMPA-EDMOND GARBER(LAKE) 138KV CKT 1'
12WP	00NR	2	'FROM->TO'	G11_051	'CIMARRON - DRAPER LAKE 345KV CKT 1'	717	0.141	104.00	'CHITWOOD - OMPA-EDMOND GARBER(LAKE) 138KV CKT 1'
12WP	00NR	2	'FROM->TO'	G11_051	'CIMARRON - DRAPER LAKE 345KV CKT 1'	717	0.141	103.97	'CHITWOOD - JONES TAP 138KV CKT 1'
12WP	00NR	2	'FROM->TO'	G11_051	'CIMARRON - DRAPER LAKE 345KV CKT 1'	717	0.141	104.73	'HORSESHOE LAKE - KAMO MEMORIAL 138KV CKT 1'
12WP	00NR	2	'FROM->TO'	G11_051	'CIMARRON - DRAPER LAKE 345KV CKT 1'	717	0.141	102.09	'SEMINOLE (SEMINOL2) 345/138/14.4KV TRANSFORMER CKT 1'
12WP	00NR	2	'FROM->TO'	G11_051	'CIMARRON - DRAPER LAKE 345KV CKT 1'	717	0.141	102.08	'SEMINOLE (SEMINOL1) 345/138/14.4KV TRANSFORMER CKT 1'
12WP	00NR	2	'FROM->TO'	G11_051	'CIMARRON - DRAPER LAKE 345KV CKT 1'	717	0.141	101.94	'FRANKLIN - PINK SW 138KV CKT 1'
12WP	00NR	2	'FROM->TO'	G11_051	'CIMARRON - DRAPER LAKE 345KV CKT 1'	717	0.141	101.66	'FRANKLIN - FRANKLIN SW 138KV CKT 1'
17WP	00NR	2	'FROM->TO'	G11_051	'CIMARRON - DRAPER LAKE 345KV CKT 1'	717	0.140	101.72	'CIMARRON - SARA 138KV CKT 1'
17WP	00NR	2	'FROM->TO'	G11_051	'CIMARRON - DRAPER LAKE 345KV CKT 1'	717	0.140	100.37	'MCCLAIN - SARA 138KV CKT 1'
17WP	00NR	2	'FROM->TO'	G11_051	'CIMARRON - DRAPER LAKE 345KV CKT 1'	717	0.140	101.34	'DBL-THIS-WWR'
13WP	00NR	2	'FROM->TO'	G11_051	'CIMARRON - DRAPER LAKE 345KV CKT 1'	717	0.140	113.01	'CIMARRON - SARA 138KV CKT 1'
13WP	00NR	2	'FROM->TO'	G11_051	'CIMARRON - DRAPER LAKE 345KV CKT 1'	717	0.140	111.75	'MCCLAIN - SARA 138KV CKT 1'

SEASON	GROUP	SCENARIO	DIRECTION	SOURCE	MONITORED ELEMENT	RATE B (MVA)	TDF	(%MVA) LOADING	CONTINGENCY
13WP	00NR	2	'FROM->TO'	G11_051	'CIMARRON - DRAPER LAKE 345KV CKT 1'	717	0.140	109.68	'MATTHEWSON 345.00 - WOODRING 345KV CKT 1'
12WP	00NR	2	'FROM->TO'	G11_051	'CIMARRON - DRAPER LAKE 345KV CKT 1'	717	0.140	102.30	'G08-13T 345.00 - SUMNERCO 345.00 345KV CKT 1'
12WP	00NR	2	'FROM->TO'	G11_051	'CIMARRON - DRAPER LAKE 345KV CKT 1'	717	0.140	102.15	'G08-13T 345.00 - WOODRING 345KV CKT 1'
13WP	00NR	2	'FROM->TO'	G11_051	'CIMARRON - DRAPER LAKE 345KV CKT 1'	717	0.139	104.34	'CLARKSVILLE - MUSKOGEE 345KV CKT 1'
13WP	00NR	2	'FROM->TO'	G11_051	'CIMARRON - DRAPER LAKE 345KV CKT 1'	717	0.139	119.98	'ARCADIA - HORSESHOE LAKE 345KV CKT 1'
13WP	00NR	2	'FROM->TO'	G11_051	'CIMARRON - DRAPER LAKE 345KV CKT 1'	717	0.139	119.97	'HORSESHOE LAKE - SEMINOLE 345KV CKT 1'
13WP	00NR	2	'FROM->TO'	G11_051	'CIMARRON - DRAPER LAKE 345KV CKT 1'	717	0.138	109.95	'CIMARRON - NORTHWEST 345KV CKT 1'
13WP	00NR	2	'FROM->TO'	G11_051	'CIMARRON - DRAPER LAKE 345KV CKT 1'	717	0.138	109.10	'SOONER - WOODRING 345KV CKT 1'
12WP	00NR	2	'FROM->TO'	G11_051	'CIMARRON - DRAPER LAKE 345KV CKT 1'	717	0.138	103.95	'MUSKOGEE - PITTSBURG 345KV CKT 1'
13WP	00NR	2	'FROM->TO'	G11_051	'CIMARRON - DRAPER LAKE 345KV CKT 1'	717	0.138	118.95	'CLEVELAND - SOONER 345KV CKT 1'
13WP	00NR	2	'FROM->TO'	G11_051	'CIMARRON - DRAPER LAKE 345KV CKT 1'	717	0.137	112.16	'DBL-WICH-THI'
17WP	00NR	2	'FROM->TO'	G11_051	'CIMARRON - DRAPER LAKE 345KV CKT 1'	717	0.137	100.11	'MATTHEWSON 345.00 - WOODRING 345KV CKT 1'
13WP	00NR	2	'FROM->TO'	G11_051	'CIMARRON - DRAPER LAKE 345KV CKT 1'	717	0.137	103.99	'DBL-WWRD-BVR'
13WP	00NR	2	'FROM->TO'	G11_051	'CIMARRON - DRAPER LAKE 345KV CKT 1'	717	0.136	113.23	'CIMARRON (CIMARON1) 345/138/13.8KV TRANSFORMER CKT 1'
13WP	00NR	2	'FROM->TO'	G11_051	'CIMARRON - DRAPER LAKE 345KV CKT 1'	717	0.136	108.72	'THISTLE 7 345.00 - WOODWARD DISTRICT EHV 345KV CKT 1'
13WP	00NR	2	'FROM->TO'	G11_051	'CIMARRON - DRAPER LAKE 345KV CKT 1'	717	0.136	108.72	'THISTLE 7 345.00 - WOODWARD DISTRICT EHV 345KV CKT 2'
13WP	00NR	2	'FROM->TO'	G11_051	'CIMARRON - DRAPER LAKE 345KV CKT 1'	717	0.136	112.40	'CIMARRON - CZECH HALL 138KV CKT 1'
13WP	00NR	2	'FROM->TO'	G11_051	'CIMARRON - DRAPER LAKE 345KV CKT 1'	717	0.136	111.95	'CZECH HALL - XEROX 138KV CKT 1'
13WP	00NR	2	'FROM->TO'	G11_051	'CIMARRON - DRAPER LAKE 345KV CKT 1'	717	0.136	111.93	'MORGAN - XEROX 138KV CKT 1'
13WP	00NR	2	'FROM->TO'	G11_051	'CIMARRON - DRAPER LAKE 345KV CKT 1'	717	0.136	111.82	'MORGAN - MUSTANG 138KV CKT 1'
17WP	00NR	2	'FROM->TO'	G11_051	'CIMARRON - DRAPER LAKE 345KV CKT 1'	717	0.136	109.72	'ARCADIA - HORSESHOE LAKE 345KV CKT 1'
17WP	00NR	2	'FROM->TO'	G11_051	'CIMARRON - DRAPER LAKE 345KV CKT 1'	717	0.136	109.71	'HORSESHOE LAKE - SEMINOLE 345KV CKT 1'
13WP	00NR	2	'FROM->TO'	G11_051	'CIMARRON - DRAPER LAKE 345KV CKT 1'	717	0.136	113.02	'CIMARRON (CIMARON2) 345/138/13.8KV TRANSFORMER CKT 1'
13WP	00NR	2	'FROM->TO'	G11_051	'CIMARRON - DRAPER LAKE 345KV CKT 1'	717	0.136	114.10	'CLEVELAND - TULSA NORTH 345KV CKT 1'
13WP	00NR	2	'FROM->TO'	G11_051	'CIMARRON - DRAPER LAKE 345KV CKT 1'	717	0.136	109.90	'JOHNSON COUNTY - SUNNYSIDE 345KV CKT 1'
13WP	00NR	2	'FROM->TO'	G11_051	'CIMARRON - DRAPER LAKE 345KV CKT 1'	717	0.136	108.43	'JOHNSON COUNTY - PITTSBURG 345KV CKT 1'
13WP	00NR	2	'FROM->TO'	G11_051	'CIMARRON - DRAPER LAKE 345KV CKT 1'	717	0.136	108.15	'CLARKSVILLE - ONETA 345KV CKT 1'
17WP	00NR	2	'FROM->TO'	G11_051	'CIMARRON - DRAPER LAKE 345KV CKT 1'	717	0.136	100.67	'CIMARRON - NORTHWEST 345KV CKT 1'
13WP	00NR	2	'FROM->TO'	G11_051	'CIMARRON - DRAPER LAKE 345KV CKT 1'	717	0.136	108.81	'OGE3TERM18'
13WP	00NR	2	'FROM->TO'	G11_051	'CIMARRON - DRAPER LAKE 345KV CKT 1'	717	0.135	108.71	'36 & MERIDIAN - PENNSYLVANIA 138KV CKT 1'
13WP	00NR	2	'FROM->TO'	G11_051	'CIMARRON - DRAPER LAKE 345KV CKT 1'	717	0.135	108.80	'SUNSHINE CANYON - WESTMOORE 138KV CKT 1'
13WP	00NR	2	'FROM->TO'	G11_051	'CIMARRON - DRAPER LAKE 345KV CKT 1'	717	0.135	108.18	'FRANKLIN SW - WESTMOORE 138KV CKT 1'
13WP	00NR	2	'FROM->TO'	G11_051	'CIMARRON - DRAPER LAKE 345KV CKT 1'	717	0.135	110.40	'LAWTON EASTSIDE - OKLAUNION 345KV CKT 1'
13WP	00NR	2	'FROM->TO'	G11_051	'CIMARRON - DRAPER LAKE 345KV CKT 1'	717	0.135	109.22	'G05-15T 345.00 - OKLAUNION 345KV CKT 1'
13WP	00NR	2	'FROM->TO'	G11_051	'CIMARRON - DRAPER LAKE 345KV CKT 1'	717	0.135	109.04	'G05-15T 345.00 - TUCO INTERCHANGE 345KV CKT 1'
13WP	00NR	2	'FROM->TO'	G11_051	'CIMARRON - DRAPER LAKE 345KV CKT 1'	717	0.135	111.04	'CANEYRV7 345.00 - NEOSHO 345KV CKT 1'
13WP	00NR	2	'FROM->TO'	G11_051	'CIMARRON - DRAPER LAKE 345KV CKT 1'	717	0.135	110.89	'CANEYRV7 345.00 - LATHAMS7 345.00 345KV CKT 1'
13WP	00NR	2	'FROM->TO'	G11_051	'CIMARRON - DRAPER LAKE 345KV CKT 1'	717	0.135	110.35	'LATHAMS7 345.00 - ROSE HILL 345KV CKT 1'
17WP	00NR	2	'FROM->TO'	G11_051	'CIMARRON - DRAPER LAKE 345KV CKT 1'	717	0.135	108.45	'CLEVELAND - SOONER 345KV CKT 1'
12WP	00NR	2	'FROM->TO'	G11_051	'CIMARRON - DRAPER LAKE 345KV CKT 1'	717	0.135	101.49	'DRAPER LAKE - SEMINOLE 345KV CKT 3'
13WP	00NR	2	'FROM->TO'	G11_051	'CIMARRON - DRAPER LAKE 345KV CKT 1'	717	0.135	105.96	'BEAVER CO 345.00 - WOODWARD DISTRICT EHV 345KV CKT 1'
13WP	00NR	2	'FROM->TO'	G11_051	'CIMARRON - DRAPER LAKE 345KV CKT 1'	717	0.135	108.64	'BLANCHARD - CORNVILLE 138KV CKT 1'
13WP	00NR	2	'FROM->TO'	G11_051	'CIMARRON - DRAPER LAKE 345KV CKT 1'	717	0.135	108.44	'BLANCHARD - MAUD 138KV CKT 1'
13WP	00NR	2	'FROM->TO'	G11_051	'CIMARRON - DRAPER LAKE 345KV CKT 1'	717	0.135	109.13	'NORTHEAST STATION - ONETA 345KV CKT 1'
13WP	00NR	2	'FROM->TO'	G11_051	'CIMARRON - DRAPER LAKE 345KV CKT 1'	717	0.135	111.09	'NORTHWEST (NORTWST2) 345/138/13.8KV TRANSFORMER CKT 1'
17WP	00NR	2	'FROM->TO'	G11_051	'CIMARRON - DRAPER LAKE 345KV CKT 1'	717	0.135	102.03	'DBL-WICH-THI'
13WP	00NR	2	'FROM->TO'	G11_051	'CIMARRON - DRAPER LAKE 345KV CKT 1'	717	0.135	108.03	'BEAVER CO 345.00 - GRAY CO 345.00 345KV CKT 1'
13WP	00NR	2	'FROM->TO'	G11_051	'CIMARRON - DRAPER LAKE 345KV CKT 1'	717	0.135	110.50	'ANADARKO - POCASSETT 138KV CKT 1'
13WP	00NR	2	'FROM->TO'	G11_051	'CIMARRON - DRAPER LAKE 345KV CKT 1'	717	0.135	110.33	'POCASSETT - TUTTLE 138KV CKT 1'
13WP	00NR	2	'FROM->TO'	G11_051	'CIMARRON - DRAPER LAKE 345KV CKT 1'	717	0.135	109.89	'SUNSHINE CANYON - TUTTLE 138KV CKT 1'
13WP	00NR	2	'FROM->TO'	G11_051	'CIMARRON - DRAPER LAKE 345KV CKT 1'	717	0.135	110.32	'NORTHWEST (NORTWST3) 345/138/13.8KV TRANSFORMER CKT 1'
13WP	00NR	2	'FROM->TO'	G11_051	'CIMARRON - DRAPER LAKE 345KV CKT 1'	717	0.135	106.70	'DELAWARE - NORTHEAST STATION 345KV CKT 1'
13WP	00NR	2	'FROM->TO'	G11_051	'CIMARRON - DRAPER LAKE 345KV CKT 1'	717	0.135	108.62	'CLASSEN - ROBINSON 138KV CKT 1'
13WP	00NR	2	'FROM->TO'	G11_051	'CIMARRON - DRAPER LAKE 345KV CKT 1'	717	0.135	108.33	'LIGHTNING CREEK - ROBINSON 138KV CKT 1'
13WP	00NR	2	'FROM->TO'	G11_051	'CIMARRON - DRAPER LAKE 345KV CKT 1'	717	0.135	108.17	'LIGHTNING CREEK - TROSPER 138KV CKT 1'
13WP	00NR	2	'FROM->TO'	G11_051	'CIMARRON - DRAPER LAKE 345KV CKT 1'	717	0.134	109.45	'GRACEMONT - MINCO 345KV CKT 1'
13WP	00NR	2	'FROM->TO'	G11_051	'CIMARRON - DRAPER LAKE 345KV CKT 1'	717	0.134	108.96	'CIMARRON - MINCO 345KV CKT 1'
13WP	00NR	2	'FROM->TO'	G11_051	'CIMARRON - DRAPER LAKE 345KV CKT 1'	717	0.134	108.56	'OGE3TERM20'
13WP	00NR	2	'FROM->TO'	G11_051	'CIMARRON - DRAPER LAKE 345KV CKT 1'	717	0.134	108.56	'KETCH TAP - NORTHWEST 138KV CKT 1'
13WP	00NR	2	'FROM->TO'	G11_051	'CIMARRON - DRAPER LAKE 345KV CKT 1'	717	0.134	108.86	'QUAIL CREEK - SKYLINE 138KV CKT 1'
13WP	00NR	2	'FROM->TO'	G11_051	'CIMARRON - DRAPER LAKE 345KV CKT 1'	717	0.134	108.29	'GRAY CO 345.00 - SPEARVILLE 345KV CKT 1'
13WP	00NR	2	'FROM->TO'	G11_051	'CIMARRON - DRAPER LAKE 345KV CKT 1'	717	0.134	108.81	'THISTLE 7 345.00 - WICHITA 345KV CKT 1'
13WP	00NR	2	'FROM->TO'	G11_051	'CIMARRON - DRAPER LAKE 345KV CKT 1'	717	0.134	108.81	'THISTLE 7 345.00 - WICHITA 345KV CKT 2'
13WP	00NR	2	'FROM->TO'	G11_051	'CIMARRON - DRAPER LAKE 345KV CKT 1'	717	0.134	108.57	'OGE3TERM11'
13WP	00NR	2	'FROM->TO'	G11_051	'CIMARRON - DRAPER LAKE 345KV CKT 1'	717	0.134	109.48	'HORSESHOE LAKE - JONES TAP 138KV CKT 1'
13WP	00NR	2	'FROM->TO'	G11_051	'CIMARRON - DRAPER LAKE 345KV CKT 1'	717	0.134	108.81	'MINGO - RED WILLOW 345KV CKT 1'
13WP	00NR	2	'FROM->TO'	G11_051	'CIMARRON - DRAPER LAKE 345KV CKT 1'	717	0.134	102.40	'OGE3TERM21'
13WP	00NR	2	'FROM->TO'	G11_051	'CIMARRON - DRAPER LAKE 345KV CKT 1'	717	0.134	101.30	'PITTSBURG - VALLIANT 345KV CKT 1'
13WP	00NR	2	'FROM->TO'	G11_051	'CIMARRON - DRAPER LAKE 345KV CKT 1'	717	0.134	102.54	'DRAPER LAKE - MIDWEST TAP 138KV CKT 1'
13WP	00NR	2	'FROM->TO'	G11_051	'CIMARRON - DRAPER LAKE 345KV CKT 1'	717	0.134	105.07	'CHAMBER SPRINGS - CLARKSVILLE 345KV CKT 1'
13WP	00NR	2	'FROM->TO'	G11_051	'CIMARRON - DRAPER LAKE 345KV CKT 1'	717	0.134	106.35	'OAKCREEK - WILD MARY 138KV CKT 1'
13WP	00NR	2	'FROM->TO'	G11_051	'CIMARRON - DRAPER LAKE 345KV CKT 1'	717	0.134	106.09	'AIRDEPT4 138.00 - WILD MARY 138KV CKT 1'
13WP	00NR	2	'FROM->TO'	G11_051	'CIMARRON - DRAPER LAKE 345KV CKT 1'	717	0.134	106.09	'AIRDEPT4 138.00 - GM 138KV CKT 1'
13WP	00NR	2	'FROM->TO'	G11_051	'CIMARRON - DRAPER LAKE 345KV CKT 1'	717	0.134	105.81	'DRAPER LAKE - GM 138KV CKT 1'
13WP	00NR	2	'FROM->TO'	G11_051	'CIMARRON - DRAPER LAKE 345KV CKT 1'	717	0.134	109.01	'CIMARRON - HAYMAKER 138KV CKT 1'
13WP	00NR	2	'FROM->TO'	G11_051	'CIMARRON - DRAPER LAKE 345KV CKT 1'	717	0.134	108.89	'DIVISION AVE - HAYMAKER 138KV CKT 1'
13WP	00NR	2	'FROM->TO'	G11_051	'CIMARRON - DRAPER LAKE 345KV CKT 1'	717	0.134	106.97	'MUSKOGEE - PECAN CREEK 345KV CKT 2'
13WP	00NR	2	'FROM->TO'	G11_051	'CIMARRON - DRAPER LAKE 345KV CKT 1'	717	0.134	108.50	'TULSA NORTH - WEKIWA 345KV CKT 1'

SEASON	GROUP	SCENARIO	DIRECTION	SOURCE	MONITORED ELEMENT	RATE B (MVA)	TDF	(%MVA) LOADING	CONTINGENCY
13WP	00NR	2	'FROM->TO'	G11_051	'CIMARRON - DRAPER LAKE 345KV CKT 1'	717	0.134	106.81	'FOREST HILL - MAUD 138KV CKT 1'
13WP	00NR	2	'FROM->TO'	G11_051	'CIMARRON - DRAPER LAKE 345KV CKT 1'	717	0.134	107.92	'SAPULPA ROAD - WEKIWA 345KV CKT 1'
17WP	00NR	2	'FROM->TO'	G11_051	'CIMARRON - DRAPER LAKE 345KV CKT 1'	717	0.134	102.77	'CIMARRON (CIMARON1) 345/138/13.8KV TRANSFORMER CKT 1'
13WP	00NR	2	'FROM->TO'	G11_051	'CIMARRON - DRAPER LAKE 345KV CKT 1'	717	0.134	108.73	'MINGO - SETAB 345KV CKT 1'
13WP	00NR	2	'FROM->TO'	G11_051	'CIMARRON - DRAPER LAKE 345KV CKT 1'	717	0.134	110.11	'REDBUD - RIVERSIDE STATION 345KV CKT 1'
13WP	00NR	2	'FROM->TO'	G11_051	'CIMARRON - DRAPER LAKE 345KV CKT 1'	717	0.134	106.50	'BORDER 7345.00 - WOODWARD DISTRICT EHV 345KV CKT 1'
13WP	00NR	2	'FROM->TO'	G11_051	'CIMARRON - DRAPER LAKE 345KV CKT 1'	717	0.134	109.00	'LACYGNE - NEOSHO 345KV CKT 1'
13WP	00NR	2	'FROM->TO'	G11_051	'CIMARRON - DRAPER LAKE 345KV CKT 1'	717	0.134	108.98	'MEMORIAL - SKYLINE 138KV CKT 1'
17WP	00NR	2	'FROM->TO'	G11_051	'CIMARRON - DRAPER LAKE 345KV CKT 1'	717	0.134	102.59	'CIMARRON (CIMARON2) 345/138/13.8KV TRANSFORMER CKT 1'
13WP	00NR	2	'FROM->TO'	G11_051	'CIMARRON - DRAPER LAKE 345KV CKT 1'	717	0.134	108.23	'BENTON - WICHITA 345KV CKT 1'
13WP	00NR	2	'FROM->TO'	G11_051	'CIMARRON - DRAPER LAKE 345KV CKT 1'	717	0.134	108.10	'DBL-FINY-HOL'
13WP	00NR	2	'FROM->TO'	G11_051	'CIMARRON - DRAPER LAKE 345KV CKT 1'	717	0.134	108.06	'FINNEY SWITCHING STATION - STEVENSCO 345.00 345KV CKT 1'
13WP	00NR	2	'FROM->TO'	G11_051	'CIMARRON - DRAPER LAKE 345KV CKT 1'	717	0.134	106.59	'MAUD - SEMINOLE 138KV CKT 1'
13WP	00NR	2	'FROM->TO'	G11_051	'CIMARRON - DRAPER LAKE 345KV CKT 1'	717	0.134	106.90	'WESTMOORE - WILROGR4 138KV CKT 1'
13WP	00NR	2	'FROM->TO'	G11_051	'CIMARRON - DRAPER LAKE 345KV CKT 1'	717	0.134	109.44	'AXTELL - POST ROCK 345KV CKT 1'
13WP	00NR	2	'FROM->TO'	G11_051	'CIMARRON - DRAPER LAKE 345KV CKT 1'	717	0.134	106.81	'Hitchland Interchange - WOODWARD DISTRICT EHV 345KV CKT 2'
13WP	00NR	2	'FROM->TO'	G11_051	'CIMARRON - DRAPER LAKE 345KV CKT 1'	717	0.134	105.78	'FT SMITH - MUSKOGEE 345KV CKT 1'
13WP	00NR	2	'FROM->TO'	G11_051	'CIMARRON - DRAPER LAKE 345KV CKT 1'	717	0.134	108.16	'MARSHALL - WOODRING 138KV CKT 1'
13WP	00NR	2	'FROM->TO'	G11_051	'CIMARRON - DRAPER LAKE 345KV CKT 1'	717	0.134	108.15	'COTTONWOOD CREEK - MARSHALL 138KV CKT 1'
13WP	00NR	2	'FROM->TO'	G11_051	'CIMARRON - DRAPER LAKE 345KV CKT 1'	717	0.134	108.38	'HOLCOMB - SETAB 345KV CKT 1'
13WP	00NR	2	'FROM->TO'	G11_051	'CIMARRON - DRAPER LAKE 345KV CKT 1'	717	0.134	107.91	'DALE - HORSESHOE LAKE 138KV CKT 1'
13WP	00NR	2	'FROM->TO'	G11_051	'CIMARRON - DRAPER LAKE 345KV CKT 1'	717	0.134	108.10	'DAYTON - MUSTANG 138KV CKT 1'
13WP	00NR	2	'FROM->TO'	G11_051	'CIMARRON - DRAPER LAKE 345KV CKT 1'	717	0.134	108.10	'DAYTON - HOBBY LOBBY 138KV CKT 1'
13WP	00NR	2	'FROM->TO'	G11_051	'CIMARRON - DRAPER LAKE 345KV CKT 1'	717	0.134	108.05	'36 & MERIDIAN - HOBBY LOBBY 138KV CKT 1'
13WP	00NR	2	'FROM->TO'	G11_051	'CIMARRON - DRAPER LAKE 345KV CKT 1'	717	0.134	108.65	'DIVISION AVE - LAKESIDE 138KV CKT 1'
13WP	00NR	2	'FROM->TO'	G11_051	'CIMARRON - DRAPER LAKE 345KV CKT 1'	717	0.134	108.53	'HEFNER - LAKESIDE 138KV CKT 1'
13WP	00NR	2	'FROM->TO'	G11_051	'CIMARRON - DRAPER LAKE 345KV CKT 1'	717	0.134	106.92	'DISCVRY - FOSTER 138KV CKT 1'
13WP	00NR	2	'FROM->TO'	G11_051	'CIMARRON - DRAPER LAKE 345KV CKT 1'	717	0.134	106.75	'DISCVRY - OAKCREEK 138KV CKT 1'
13WP	00NR	2	'FROM->TO'	G11_051	'CIMARRON - DRAPER LAKE 345KV CKT 1'	717	0.134	109.30	'G11-17T 345.00 - POST ROCK 345KV CKT 1'
13WP	00NR	2	'FROM->TO'	G11_051	'CIMARRON - DRAPER LAKE 345KV CKT 1'	717	0.134	108.29	'KETCH - KETCH TAP 138KV CKT 1'
13WP	00NR	2	'FROM->TO'	G11_051	'CIMARRON - DRAPER LAKE 345KV CKT 1'	717	0.134	108.98	'BLACKBERRY - NEOSHO 345KV CKT 1'
13WP	00NR	2	'FROM->TO'	G11_051	'CIMARRON - DRAPER LAKE 345KV CKT 1'	717	0.134	108.97	'DBL-MULG-CIR'
13WP	00NR	2	'FROM->TO'	G11_051	'CIMARRON - DRAPER LAKE 345KV CKT 1'	717	0.134	108.94	'DBL-SPRVL-MU'
13WP	00NR	2	'FROM->TO'	G11_051	'CIMARRON - DRAPER LAKE 345KV CKT 1'	717	0.134	111.18	'ANDERSONCO 345.00 - LACYGNE 345KV CKT 1'
13WP	00NR	2	'FROM->TO'	G11_051	'CIMARRON - DRAPER LAKE 345KV CKT 1'	717	0.134	111.06	'ANDERSONCO 345.00 - WOLF CREEK 345KV CKT 1'
13WP	00NR	2	'FROM->TO'	G11_051	'CIMARRON - DRAPER LAKE 345KV CKT 1'	717	0.134	108.57	'EMPORIA ENERGY CENTER - WICHITA 345KV CKT 1'
13WP	00NR	2	'FROM->TO'	G11_051	'CIMARRON - DRAPER LAKE 345KV CKT 1'	717	0.134	108.23	'CIVIT - PAOLI 138KV CKT 1'
13WP	00NR	2	'FROM->TO'	G11_051	'CIMARRON - DRAPER LAKE 345KV CKT 1'	717	0.134	108.17	'CIVIT - STRATFORD 138KV CKT 1'
13WP	00NR	2	'FROM->TO'	G11_051	'CIMARRON - DRAPER LAKE 345KV CKT 1'	717	0.134	108.12	'OIL CENTER - STRATFORD 138KV CKT 1'
13WP	00NR	2	'FROM->TO'	G11_051	'CIMARRON - DRAPER LAKE 345KV CKT 1'	717	0.134	108.05	'LATTA JCT - OIL CENTER 138KV CKT 1'
13WP	00NR	2	'FROM->TO'	G11_051	'CIMARRON - DRAPER LAKE 345KV CKT 1'	717	0.134	107.91	'LASALLE - LATTA JCT 138KV CKT 1'
13WP	00NR	2	'FROM->TO'	G11_051	'CIMARRON - DRAPER LAKE 345KV CKT 1'	717	0.134	108.87	'CORN TAP - PAOLI 138KV CKT 1'
13WP	00NR	2	'FROM->TO'	G11_051	'CIMARRON - DRAPER LAKE 345KV CKT 1'	717	0.134	106.78	'OGE3TERM33'
13WP	00NR	2	'FROM->TO'	G11_051	'CIMARRON - DRAPER LAKE 345KV CKT 1'	717	0.134	108.89	'HUGO - SUNNYSIDE 345KV CKT 1'
13WP	00NR	2	'FROM->TO'	G11_051	'CIMARRON - DRAPER LAKE 345KV CKT 1'	717	0.134	108.46	'SWISSVALE - WEST GARDNER 345KV CKT 1'
13WP	00NR	2	'FROM->TO'	G11_051	'CIMARRON - DRAPER LAKE 345KV CKT 1'	717	0.134	104.91	'DRAPER LAKE (DRAPER2) 345/138/13.8KV TRANSFORMER CKT 1'
13WP	00NR	2	'FROM->TO'	G11_051	'CIMARRON - DRAPER LAKE 345KV CKT 1'	717	0.134	104.73	'DRAPER LAKE (DRAPER3) 345/138/13.8KV TRANSFORMER CKT 1'
13WP	00NR	2	'FROM->TO'	G11_051	'CIMARRON - DRAPER LAKE 345KV CKT 1'	717	0.134	104.73	'DRAPER LAKE (DRAPER4) 345/138/13.8KV TRANSFORMER CKT 1'
13WP	00NR	2	'FROM->TO'	G11_051	'CIMARRON - DRAPER LAKE 345KV CKT 1'	717	0.134	106.42	'PARK LANE - SEMINOLE 138KV CKT 1'
13WP	00NR	2	'FROM->TO'	G11_051	'CIMARRON - DRAPER LAKE 345KV CKT 1'	717	0.134	105.28	'FRANKLIN SW - MIDWEST TAP 138KV CKT 1'
13WP	00NR	2	'FROM->TO'	G11_051	'CIMARRON - DRAPER LAKE 345KV CKT 1'	717	0.134	106.93	'ARBUCKLE - VANOSS 138KV CKT 1'
13WP	00NR	2	'FROM->TO'	G11_051	'CIMARRON - DRAPER LAKE 345KV CKT 1'	717	0.134	108.48	'OVERTON-TRF'
13WP	00NR	2	'FROM->TO'	G11_051	'CIMARRON - DRAPER LAKE 345KV CKT 1'	717	0.134	108.57	'7OVERTON 345.00 - SIBLEY 345KV CKT 1'
13WP	00NR	2	'FROM->TO'	G11_051	'CIMARRON - DRAPER LAKE 345KV CKT 1'	717	0.134	108.36	'DIVISION AVE - MUSTANG 138KV CKT 1'
13WP	00NR	2	'FROM->TO'	G11_051	'CIMARRON - DRAPER LAKE 345KV CKT 1'	717	0.134	108.52	'LONEOAK - NORTHWEST 138KV CKT 1'
13WP	00NR	2	'FROM->TO'	G11_051	'CIMARRON - DRAPER LAKE 345KV CKT 1'	717	0.134	108.20	'LONEOAK - QUAIL CREEK 138KV CKT 1'
13WP	00NR	2	'FROM->TO'	G11_051	'CIMARRON - DRAPER LAKE 345KV CKT 1'	717	0.134	108.16	'ROSE HILL - SUMNERCO 345.00 345KV CKT 1'
13WP	00NR	2	'FROM->TO'	G11_051	'CIMARRON - DRAPER LAKE 345KV CKT 1'	717	0.134	107.98	'PENNSYLVANIA - SANTA FE 138KV CKT 1'
13WP	00NR	2	'FROM->TO'	G11_051	'CIMARRON - DRAPER LAKE 345KV CKT 1'	717	0.134	108.03	'CLINTON AIR FORCE BASE TAP - ELK CITY 138KV CKT 1'
13WP	00NR	2	'FROM->TO'	G11_051	'CIMARRON - DRAPER LAKE 345KV CKT 1'	717	0.134	108.02	'CLINTON AIR FORCE BASE TAP - HOBART JUNCTION 138KV CKT 1'
13WP	00NR	2	'FROM->TO'	G11_051	'CIMARRON - DRAPER LAKE 345KV CKT 1'	717	0.134	108.16	'HAMMETT TAP - HORSESHOE LAKE 138KV CKT 1'
13WP	00NR	2	'FROM->TO'	G11_051	'CIMARRON - DRAPER LAKE 345KV CKT 1'	717	0.134	108.03	'CLEO CORNER - MEN TAP 138KV CKT 1'
13WP	00NR	2	'FROM->TO'	G11_051	'CIMARRON - DRAPER LAKE 345KV CKT 1'	717	0.134	108.02	'IMO TAP - MEN TAP 138KV CKT 1'
13WP	00NR	2	'FROM->TO'	G11_051	'CIMARRON - DRAPER LAKE 345KV CKT 1'	717	0.134	108.00	'HEALDTON - LOCO 138KV CKT 1'
13WP	00NR	2	'FROM->TO'	G11_051	'CIMARRON - DRAPER LAKE 345KV CKT 1'	717	0.134	107.92	'HEALDTON - RINGLING 138KV CKT 1'
13WP	00NR	2	'FROM->TO'	G11_051	'CIMARRON - DRAPER LAKE 345KV CKT 1'	717	0.134	107.98	'EL RENO SW - MUSTANG 69KV CKT 1'
13WP	00NR	2	'FROM->TO'	G11_051	'CIMARRON - DRAPER LAKE 345KV CKT 1'	717	0.134	107.98	'ANADARKO - BLANCHARD 69KV CKT 1'
13WP	00NR	2	'FROM->TO'	G11_051	'CIMARRON - DRAPER LAKE 345KV CKT 1'	717	0.133	109.17	'WRTOD400'
13WP	00NR	2	'FROM->TO'	G11_051	'CIMARRON - DRAPER LAKE 345KV CKT 1'	717	0.133	109.08	'HOYT - JEFFREY ENERGY CENTER 345KV CKT 1'
13WP	00NR	2	'FROM->TO'	G11_051	'CIMARRON - DRAPER LAKE 345KV CKT 1'	717	0.133	108.69	'HOYT - STRANGER CREEK 345KV CKT 1'
13WP	00NR	2	'FROM->TO'	G11_051	'CIMARRON - DRAPER LAKE 345KV CKT 1'	717	0.133	108.21	'EMPORIA ENERGY CENTER - SWISSVALE 345KV CKT 1'
13WP	00NR	2	'FROM->TO'	G11_051	'CIMARRON - DRAPER LAKE 345KV CKT 1'	717	0.133	107.94	'5LOCSTGV - MAID 161KV CKT 1'
13WP	00NR	2	'FROM->TO'	G11_051	'CIMARRON - DRAPER LAKE 345KV CKT 1'	717	0.133	107.93	'5CDRCRST 161.00 - 5LOCSTGV 161KV CKT 1'
13WP	00NR	2	'FROM->TO'	G11_051	'CIMARRON - DRAPER LAKE 345KV CKT 1'	717	0.133	109.52	'OGE3TERM14'
13WP	00NR	2	'FROM->TO'	G11_051	'CIMARRON - DRAPER LAKE 345KV CKT 1'	717	0.133	108.40	'NORTHWEST - PANTHER 138KV CKT 1'
13WP	00NR	2	'FROM->TO'	G11_051	'CIMARRON - DRAPER LAKE 345KV CKT 1'	717	0.133	108.36	'PANTHER - SILVER LAKE 138KV CKT 1'
13WP	00NR	2	'FROM->TO'	G11_051	'CIMARRON - DRAPER LAKE 345KV CKT 1'	717	0.133	108.27	'COMANCHE - LOCO 138KV CKT 1'
13WP	00NR	2	'FROM->TO'	G11_051	'CIMARRON - DRAPER LAKE 345KV CKT 1'	717	0.133	108.06	'RENO COUNTY - SUMMIT 345KV CKT 1'

SEASON	GROUP	SCENARIO	DIRECTION	SOURCE	MONITORED ELEMENT	RATE B (MVA)	TDF	(%MVA) LOADING	CONTINGENCY
13WP	00NR	2	'FROM->TO'	G11_051	'CIMARRON - DRAPER LAKE 345KV CKT 1'	717	0.133	108.05	'OUMED 4 - STONEWALL 138KV CKT 1'
13WP	00NR	2	'FROM->TO'	G11_051	'CIMARRON - DRAPER LAKE 345KV CKT 1'	717	0.133	108.03	'GLASS MOUNTAIN - MOORELAND 138KV CKT 1'
13WP	00NR	2	'FROM->TO'	G11_051	'CIMARRON - DRAPER LAKE 345KV CKT 1'	717	0.133	108.03	'CLEO CORNER - GLASS MOUNTAIN 138KV CKT 1'
13WP	00NR	2	'FROM->TO'	G11_051	'CIMARRON - DRAPER LAKE 345KV CKT 1'	717	0.133	107.99	'OUMED 4 - PARK PLACE 138KV CKT 1'
13WP	00NR	2	'FROM->TO'	G11_051	'CIMARRON - DRAPER LAKE 345KV CKT 1'	717	0.133	106.96	'SEMINOLE - VANOSS 138KV CKT 1'
17WP	00NR	2	'FROM->TO'	G11_051	'CIMARRON - DRAPER LAKE 345KV CKT 1'	717	0.133	103.96	'CLEVELAND - TULSA NORTH 345KV CKT 1'
13WP	00NR	2	'FROM->TO'	G11_051	'CIMARRON - DRAPER LAKE 345KV CKT 1'	717	0.133	108.75	'OGE3TERM17'
13WP	00NR	2	'FROM->TO'	G11_051	'CIMARRON - DRAPER LAKE 345KV CKT 1'	717	0.133	108.43	'HUGO - VALLIANT 345KV CKT 1'
13WP	00NR	2	'FROM->TO'	G11_051	'CIMARRON - DRAPER LAKE 345KV CKT 1'	717	0.133	108.24	'AXTELL - PAULINE 345KV CKT 1'
13WP	00NR	2	'FROM->TO'	G11_051	'CIMARRON - DRAPER LAKE 345KV CKT 1'	717	0.133	107.94	'COUNCIL - MUSTANG 138KV CKT 1'
13WP	00NR	2	'FROM->TO'	G11_051	'CIMARRON - DRAPER LAKE 345KV CKT 1'	717	0.133	106.53	'KEO EHV - WEST MEMPHIS 500 500KV CKT 1'
13WP	00NR	2	'FROM->TO'	G11_051	'CIMARRON - DRAPER LAKE 345KV CKT 1'	717	0.133	108.50	'GRAND ISLAND - SWEETWATER 345KV CKT 1'
13WP	00NR	2	'FROM->TO'	G11_051	'CIMARRON - DRAPER LAKE 345KV CKT 1'	717	0.133	106.76	'DBL-CLRK-G11'
13WP	00NR	2	'FROM->TO'	G11_051	'CIMARRON - DRAPER LAKE 345KV CKT 1'	717	0.133	106.33	'DBL-THIS-CLR'
13WP	00NR	2	'FROM->TO'	G11_051	'CIMARRON - DRAPER LAKE 345KV CKT 1'	717	0.133	108.26	'CLEVELAND (CLVAUTO1) 345/138/13.8KV TRANSFORMER CKT 1'
13WP	00NR	2	'FROM->TO'	G11_051	'CIMARRON - DRAPER LAKE 345KV CKT 1'	717	0.133	108.09	'MOORE - PAULINE 345KV CKT 1'
17WP	00NR	2	'FROM->TO'	G11_051	'CIMARRON - DRAPER LAKE 345KV CKT 1'	717	0.133	101.94	'CIMARRON - CZECH HALL 138KV CKT 1'
17WP	00NR	2	'FROM->TO'	G11_051	'CIMARRON - DRAPER LAKE 345KV CKT 1'	717	0.133	101.50	'CZECH HALL - XEROX 138KV CKT 1'
17WP	00NR	2	'FROM->TO'	G11_051	'CIMARRON - DRAPER LAKE 345KV CKT 1'	717	0.133	101.48	'MORGAN - XEROX 138KV CKT 1'
17WP	00NR	2	'FROM->TO'	G11_051	'CIMARRON - DRAPER LAKE 345KV CKT 1'	717	0.133	101.42	'MORGAN - MUSTANG 138KV CKT 1'
13WP	00NR	2	'FROM->TO'	G11_051	'CIMARRON - DRAPER LAKE 345KV CKT 1'	717	0.133	107.95	'HEFNER - TULSA 138KV CKT 1'
13WP	00NR	2	'FROM->TO'	G11_051	'CIMARRON - DRAPER LAKE 345KV CKT 1'	717	0.133	106.90	'8BHAM STEEL 500.00 - WEST MEMPHIS 500 500KV CKT 1'
13WP	00NR	2	'FROM->TO'	G11_051	'CIMARRON - DRAPER LAKE 345KV CKT 1'	717	0.133	106.89	'AMRN_OUTS5'
17WP	00NR	2	'FROM->TO'	G11_051	'CIMARRON - DRAPER LAKE 345KV CKT 1'	717	0.133	100.00	'JOHNSON COUNTY - SUNNYSIDE 345KV CKT 1'
13WP	00NR	2	'FROM->TO'	G11_051	'CIMARRON - DRAPER LAKE 345KV CKT 1'	717	0.133	108.40	'OGE3TERM13'
13WP	00NR	2	'FROM->TO'	G11_051	'CIMARRON - DRAPER LAKE 345KV CKT 1'	717	0.133	108.23	'ELK CITY 230KV - SWEETWATER 230KV CKT 1'
13WP	00NR	2	'FROM->TO'	G11_051	'CIMARRON - DRAPER LAKE 345KV CKT 1'	717	0.133	108.23	'ELK CITY 230KV (ELKCTY-6) 230/138/13.8KV TRANSFORMER CKT 1'
13WP	00NR	2	'FROM->TO'	G11_051	'CIMARRON - DRAPER LAKE 345KV CKT 1'	717	0.133	108.35	'GRACEMONT (BANK 1) 345/138/13.8KV TRANSFORMER CKT 1'
13WP	00NR	2	'FROM->TO'	G11_051	'CIMARRON - DRAPER LAKE 345KV CKT 1'	717	0.133	106.81	'CANADIAN RIVER - MCALESTER SOUTH 138KV CKT 1'
13WP	00NR	2	'FROM->TO'	G11_051	'CIMARRON - DRAPER LAKE 345KV CKT 1'	717	0.133	106.80	'CANADIAN RIVER () 345/138/13.8KV TRANSFORMER CKT 1'
13WP	00NR	2	'FROM->TO'	G11_051	'CIMARRON - DRAPER LAKE 345KV CKT 1'	717	0.133	106.54	'DELL 500 - INDEPENDENCE 500KV CKT 1'
13WP	00NR	2	'FROM->TO'	G11_051	'CIMARRON - DRAPER LAKE 345KV CKT 1'	717	0.133	108.17	'ANADARKO - GEORGIA 138KV CKT 1'
13WP	00NR	2	'FROM->TO'	G11_051	'CIMARRON - DRAPER LAKE 345KV CKT 1'	717	0.133	108.13	'FLETCHER - GEORGIA 138KV CKT 1'
13WP	00NR	2	'FROM->TO'	G11_051	'CIMARRON - DRAPER LAKE 345KV CKT 1'	717	0.133	108.00	'EMPIRE - FLETCHER 138KV CKT 1'
13WP	00NR	2	'FROM->TO'	G11_051	'CIMARRON - DRAPER LAKE 345KV CKT 1'	717	0.133	107.93	'COMANCHE - EMPIRE 138KV CKT 1'
13WP	00NR	2	'FROM->TO'	G11_051	'CIMARRON - DRAPER LAKE 345KV CKT 1'	717	0.133	107.04	'HOLLYWOOD - MIDWEST TAP 138KV CKT 1'
13WP	00NR	2	'FROM->TO'	G11_051	'CIMARRON - DRAPER LAKE 345KV CKT 1'	717	0.133	106.96	'OGE3TERM41'
13WP	00NR	2	'FROM->TO'	G11_051	'CIMARRON - DRAPER LAKE 345KV CKT 1'	717	0.133	106.88	'G11_040_TAP 138.00 - POOLEVILLE 138KV CKT 1'
13WP	00NR	2	'FROM->TO'	G11_051	'CIMARRON - DRAPER LAKE 345KV CKT 1'	717	0.133	108.21	'AI43'
13WP	00NR	2	'FROM->TO'	G11_051	'CIMARRON - DRAPER LAKE 345KV CKT 1'	717	0.133	108.21	'7LUTESVIL 345.00 - 7ST FRANC 345.00 345KV CKT 1'
13WP	00NR	2	'FROM->TO'	G11_051	'CIMARRON - DRAPER LAKE 345KV CKT 1'	717	0.133	108.12	'CLINTON - MONTROSE 161KV CKT 1'
13WP	00NR	2	'FROM->TO'	G11_051	'CIMARRON - DRAPER LAKE 345KV CKT 1'	717	0.133	108.04	'EL RENO - ROMAN NOSE 138KV CKT 1'
13WP	00NR	2	'FROM->TO'	G11_051	'CIMARRON - DRAPER LAKE 345KV CKT 1'	717	0.133	108.03	'ROMAN NOSE - SOUTHARD 138KV CKT 1'
13WP	00NR	2	'FROM->TO'	G11_051	'CIMARRON - DRAPER LAKE 345KV CKT 1'	717	0.133	108.02	'DEWEY - SOUTHARD 138KV CKT 1'
13WP	00NR	2	'FROM->TO'	G11_051	'CIMARRON - DRAPER LAKE 345KV CKT 1'	717	0.133	106.93	'OSAGE - WEBB CITY TAP 138KV CKT 1'
13WP	00NR	2	'FROM->TO'	G11_051	'CIMARRON - DRAPER LAKE 345KV CKT 1'	717	0.133	106.91	'ARKANSAS NUCLEAR ONE - PLEASANT HILL 500KV CKT 1'
13WP	00NR	2	'FROM->TO'	G11_051	'CIMARRON - DRAPER LAKE 345KV CKT 1'	717	0.133	106.75	'FAIRFAX TAP - WEBB CITY TAP 138KV CKT 1'
13WP	00NR	2	'FROM->TO'	G11_051	'CIMARRON - DRAPER LAKE 345KV CKT 1'	717	0.133	108.31	'OGE3TERM19'
13WP	00NR	2	'FROM->TO'	G11_051	'CIMARRON - DRAPER LAKE 345KV CKT 1'	717	0.133	108.19	'HAMMETT TAP - HAMMETT2 138KV CKT 1'
13WP	00NR	2	'FROM->TO'	G11_051	'CIMARRON - DRAPER LAKE 345KV CKT 1'	717	0.133	108.07	'HAMMETT2 - MEEKER 138KV CKT 1'
13WP	00NR	2	'FROM->TO'	G11_051	'CIMARRON - DRAPER LAKE 345KV CKT 1'	717	0.133	106.98	'ROSE HILL - WOLF CREEK 345KV CKT 1'
13WP	00NR	2	'FROM->TO'	G11_051	'CIMARRON - DRAPER LAKE 345KV CKT 1'	717	0.133	107.97	'NEOSHO (NEOSHO2X) 345/161/13.8KV TRANSFORMER CKT 1'
13WP	00NR	2	'FROM->TO'	G11_051	'CIMARRON - DRAPER LAKE 345KV CKT 1'	717	0.133	106.39	'DRAPER LAKE - SOONER TAP 138KV CKT 1'
13WP	00NR	2	'FROM->TO'	G11_051	'CIMARRON - DRAPER LAKE 345KV CKT 1'	717	0.133	106.39	'OGE3TERM22'
13WP	00NR	2	'FROM->TO'	G11_051	'CIMARRON - DRAPER LAKE 345KV CKT 1'	717	0.133	109.42	'OGE3TERM12'
13WP	00NR	2	'FROM->TO'	G11_051	'CIMARRON - DRAPER LAKE 345KV CKT 1'	717	0.133	106.74	'BAXTER WILSON SES - PERRYVILLE 500KV CKT 1'
13WP	00NR	2	'FROM->TO'	G11_051	'CIMARRON - DRAPER LAKE 345KV CKT 1'	717	0.133	108.50	'FAIRFAX TAP - SHIDLER 138KV CKT 1'
13WP	00NR	2	'FROM->TO'	G11_051	'CIMARRON - DRAPER LAKE 345KV CKT 1'	717	0.133	108.46	'SHIDLER - WEST PAWHUSKA 138KV CKT 1'
13WP	00NR	2	'FROM->TO'	G11_051	'CIMARRON - DRAPER LAKE 345KV CKT 1'	717	0.133	108.46	'PAWHUSKA TAP - WEST PAWHUSKA 138KV CKT 1'
13WP	00NR	2	'FROM->TO'	G11_051	'CIMARRON - DRAPER LAKE 345KV CKT 1'	717	0.133	108.41	'DOMES - PAWHUSKA TAP 138KV CKT 1'
13WP	00NR	2	'FROM->TO'	G11_051	'CIMARRON - DRAPER LAKE 345KV CKT 1'	717	0.133	108.39	'DOMES - MOUND ROAD 138KV CKT 1'
13WP	00NR	2	'FROM->TO'	G11_051	'CIMARRON - DRAPER LAKE 345KV CKT 1'	717	0.133	107.97	'ATC_B2_8E2'
13WP	00NR	2	'FROM->TO'	G11_051	'CIMARRON - DRAPER LAKE 345KV CKT 1'	717	0.133	107.95	'LAKEOVER - MCADAMS 500KV CKT 1'
13WP	00NR	2	'FROM->TO'	G11_051	'CIMARRON - DRAPER LAKE 345KV CKT 1'	717	0.133	108.27	'7JASPER 345.00 - MORGAN 345KV CKT 1'
13WP	00NR	2	'FROM->TO'	G11_051	'CIMARRON - DRAPER LAKE 345KV CKT 1'	717	0.133	108.15	'WEBRE - WELLS 500KV CKT 1'
13WP	00NR	2	'FROM->TO'	G11_051	'CIMARRON - DRAPER LAKE 345KV CKT 1'	717	0.133	108.06	'OGE3TERM28'
13WP	00NR	2	'FROM->TO'	G11_051	'CIMARRON - DRAPER LAKE 345KV CKT 1'	717	0.133	108.05	'ATCHSNT3 345.00 - BOONEVILLE 345KV CKT 1'
13WP	00NR	2	'FROM->TO'	G11_051	'CIMARRON - DRAPER LAKE 345KV CKT 1'	717	0.133	107.98	'ATCHSNT3 345.00 - COOPER 345KV CKT 1'
13WP	00NR	2	'FROM->TO'	G11_051	'CIMARRON - DRAPER LAKE 345KV CKT 1'	717	0.133	107.98	'SHERIDAN EHV - WHITE BLUFF 500KV CKT 1'
13WP	00NR	2	'FROM->TO'	G11_051	'CIMARRON - DRAPER LAKE 345KV CKT 1'	717	0.133	108.39	'8DANIEL 500.00 - MCKNIGHT 500KV CKT 1'
13WP	00NR	2	'FROM->TO'	G11_051	'CIMARRON - DRAPER LAKE 345KV CKT 1'	717	0.133	108.05	'CHERRY CREEK - PLEASANT VALLEY 138KV CKT 1'
13WP	00NR	2	'FROM->TO'	G11_051	'CIMARRON - DRAPER LAKE 345KV CKT 1'	717	0.133	107.92	'BOYD - CHERRY CREEK 138KV CKT 1'
13WP	00NR	2	'FROM->TO'	G11_051	'CIMARRON - DRAPER LAKE 345KV CKT 1'	717	0.133	106.90	'BAXTER WILSON SES - RAY BRASWELL SES 500KV CKT 1'
13WP	00NR	2	'FROM->TO'	G11_051	'CIMARRON - DRAPER LAKE 345KV CKT 1'	717	0.133	106.88	'NELSON - RICHARD 500KV CKT 1'
13WP	00NR	2	'FROM->TO'	G11_051	'CIMARRON - DRAPER LAKE 345KV CKT 1'	717	0.133	108.26	'DOLET HILLS - SOUTHWEST SHREVEPORT 345KV CKT 1'
13WP	00NR	2	'FROM->TO'	G11_051	'CIMARRON - DRAPER LAKE 345KV CKT 1'	717	0.133	108.22	'OGE3TERM3'
13WP	00NR	2	'FROM->TO'	G11_051	'CIMARRON - DRAPER LAKE 345KV CKT 1'	717	0.133	108.18	'GRDA-OPGD-05'
13WP	00NR	2	'FROM->TO'	G11_051	'CIMARRON - DRAPER LAKE 345KV CKT 1'	717	0.133	106.95	'CROCKETT - GRIMES 345KV CKT 1'

SEASON	GROUP	SCENARIO	DIRECTION	SOURCE	MONITORED ELEMENT	RATE B (MVA)	TDF	(%MVA) LOADING	CONTINGENCY
13WP	00NR	2	'FROM->TO'	G11_051	'CIMARRON - DRAPER LAKE 345KV CKT 1'	717	0.133	106.83	'LEBROCK - TENASKA RUSK COUNTY 345KV CKT 1'
13WP	00NR	2	'FROM->TO'	G11_051	'CIMARRON - DRAPER LAKE 345KV CKT 1'	717	0.133	106.83	'CROCKETT - TENASKA RUSK COUNTY 345KV CKT 1'
13WP	00NR	2	'FROM->TO'	G11_051	'CIMARRON - DRAPER LAKE 345KV CKT 1'	717	0.133	106.61	'DOLET HILLS 345/230KV TRANSFORMER CKT 1'
13WP	00NR	2	'FROM->TO'	G11_051	'CIMARRON - DRAPER LAKE 345KV CKT 1'	717	0.133	116.03	'GEN336821 1-GRAND GULF UNIT'
13WP	00NR	2	'FROM->TO'	G11_051	'CIMARRON - DRAPER LAKE 345KV CKT 1'	717	0.133	115.71	'GEN336153 1-WATERFORD UNIT#3'
13WP	00NR	2	'FROM->TO'	G11_051	'CIMARRON - DRAPER LAKE 345KV CKT 1'	717	0.133	114.57	'GEN337911 1-ARKANSAS NUCLEAR ONE UNIT #2'
13WP	00NR	2	'FROM->TO'	G11_051	'CIMARRON - DRAPER LAKE 345KV CKT 1'	717	0.133	114.50	'GEN335831 1-RIVERBEND UNIT#1'
13WP	00NR	2	'FROM->TO'	G11_051	'CIMARRON - DRAPER LAKE 345KV CKT 1'	717	0.133	113.64	'GEN501801 1-DOLET HILLS UNIT1'
13WP	00NR	2	'FROM->TO'	G11_051	'CIMARRON - DRAPER LAKE 345KV CKT 1'	717	0.133	113.40	'GEN337910 1-ARKANSAS NUCLEAR ONE UNIT #1'
13WP	00NR	2	'FROM->TO'	G11_051	'CIMARRON - DRAPER LAKE 345KV CKT 1'	717	0.133	113.14	'GEN520947 1-HUGO1'
13WP	00NR	2	'FROM->TO'	G11_051	'CIMARRON - DRAPER LAKE 345KV CKT 1'	717	0.133	112.60	'GEN337652 1-WHITE BLUFF UNIT #1'
13WP	00NR	2	'FROM->TO'	G11_051	'CIMARRON - DRAPER LAKE 345KV CKT 1'	717	0.133	112.49	'GEN515040 1-SEMINOLE 1G'
13WP	00NR	2	'FROM->TO'	G11_051	'CIMARRON - DRAPER LAKE 345KV CKT 1'	717	0.133	112.40	'GEN509403 1-PIRKEY GENERATION'
13WP	00NR	2	'FROM->TO'	G11_051	'CIMARRON - DRAPER LAKE 345KV CKT 1'	717	0.133	112.40	'GEN509416 1-TURK GENERATION'
13WP	00NR	2	'FROM->TO'	G11_051	'CIMARRON - DRAPER LAKE 345KV CKT 1'	717	0.133	112.30	'GEN337653 1-WHITE BLUFF UNIT #2'
13WP	00NR	2	'FROM->TO'	G11_051	'CIMARRON - DRAPER LAKE 345KV CKT 1'	717	0.133	112.28	'GEN515042 1-SEMINOLE 3G'
13WP	00NR	2	'FROM->TO'	G11_051	'CIMARRON - DRAPER LAKE 345KV CKT 1'	717	0.133	112.20	'GEN336251 1-NINEMILE POINT UNIT#4'
13WP	00NR	2	'FROM->TO'	G11_051	'CIMARRON - DRAPER LAKE 345KV CKT 1'	717	0.133	112.14	'GEN501813 1-RODEMACHER UNIT 3'
13WP	00NR	2	'FROM->TO'	G11_051	'CIMARRON - DRAPER LAKE 345KV CKT 1'	717	0.133	112.04	'GEN338146 1-INDEPENDENCE UNIT #2'
13WP	00NR	2	'FROM->TO'	G11_051	'CIMARRON - DRAPER LAKE 345KV CKT 1'	717	0.133	112.00	'GEN338143 1-INDEPENDENCE UNIT #1'
13WP	00NR	2	'FROM->TO'	G11_051	'CIMARRON - DRAPER LAKE 345KV CKT 1'	717	0.133	111.90	'GEN337041 1-GERALD ANDRUS'
13WP	00NR	2	'FROM->TO'	G11_051	'CIMARRON - DRAPER LAKE 345KV CKT 1'	717	0.133	111.65	'GEN515041 1-SEMINOLE 2G'
13WP	00NR	2	'FROM->TO'	G11_051	'CIMARRON - DRAPER LAKE 345KV CKT 1'	717	0.133	111.61	'GEN509406 1-WELSH #3'
13WP	00NR	2	'FROM->TO'	G11_051	'CIMARRON - DRAPER LAKE 345KV CKT 1'	717	0.133	111.61	'GEN509405 1-WELSH #2'
13WP	00NR	2	'FROM->TO'	G11_051	'CIMARRON - DRAPER LAKE 345KV CKT 1'	717	0.133	111.61	'GEN509404 1-WELSH #1'
13WP	00NR	2	'FROM->TO'	G11_051	'CIMARRON - DRAPER LAKE 345KV CKT 1'	717	0.133	111.60	'GEN501812 1-RODEMACHER UNIT 2'
13WP	00NR	2	'FROM->TO'	G11_051	'CIMARRON - DRAPER LAKE 345KV CKT 1'	717	0.133	111.59	'GEN334440 1-SABINE UNIT 4'
13WP	00NR	2	'FROM->TO'	G11_051	'CIMARRON - DRAPER LAKE 345KV CKT 1'	717	0.133	111.47	'GEN335206 1-NELSON UNIT 6'
13WP	00NR	2	'FROM->TO'	G11_051	'CIMARRON - DRAPER LAKE 345KV CKT 1'	717	0.133	111.34	'GEN515226 1-MUSKOGEE 6G'
13WP	00NR	2	'FROM->TO'	G11_051	'CIMARRON - DRAPER LAKE 345KV CKT 1'	717	0.133	111.25	'GEN336831 1-BAXTER WILSON SES'
13WP	00NR	2	'FROM->TO'	G11_051	'CIMARRON - DRAPER LAKE 345KV CKT 1'	717	0.133	111.12	'GEN334441 1-SABINE UNIT 5'
13WP	00NR	2	'FROM->TO'	G11_051	'CIMARRON - DRAPER LAKE 345KV CKT 1'	717	0.133	110.94	'GEN338388 1-1PLUMPT 23.000'
13WP	00NR	2	'FROM->TO'	G11_051	'CIMARRON - DRAPER LAKE 345KV CKT 1'	717	0.133	110.84	'GEN515223 1-MUSKOGEE 4G'
13WP	00NR	2	'FROM->TO'	G11_051	'CIMARRON - DRAPER LAKE 345KV CKT 1'	717	0.133	110.79	'GEN515225 1-MUSKOGEE 5G'
13WP	00NR	2	'FROM->TO'	G11_051	'CIMARRON - DRAPER LAKE 345KV CKT 1'	717	0.133	109.59	'GEN336170 1-GULF OXY U4'
13WP	00NR	2	'FROM->TO'	G11_051	'CIMARRON - DRAPER LAKE 345KV CKT 1'	717	0.133	109.41	'GEN334070 1-LEWIS CREEK 1'
13WP	00NR	2	'FROM->TO'	G11_051	'CIMARRON - DRAPER LAKE 345KV CKT 1'	717	0.133	109.38	'GEN334071 1-LEWIS CREEK 2'
13WP	00NR	2	'FROM->TO'	G11_051	'CIMARRON - DRAPER LAKE 345KV CKT 1'	717	0.133	109.24	'GEN300006 1-NEW MADRID UNIT 1'
13WP	00NR	2	'FROM->TO'	G11_051	'CIMARRON - DRAPER LAKE 345KV CKT 1'	717	0.133	109.22	'GEN300007 1-NEW MADRID UNIT 2'
13WP	00NR	2	'FROM->TO'	G11_051	'CIMARRON - DRAPER LAKE 345KV CKT 1'	717	0.133	109.11	'GEN514998 1-MCCLAIN UNIT 1'
13WP	00NR	2	'FROM->TO'	G11_051	'CIMARRON - DRAPER LAKE 345KV CKT 1'	717	0.133	109.10	'GEN334432 1-SABINE UNIT 2'
13WP	00NR	2	'FROM->TO'	G11_051	'CIMARRON - DRAPER LAKE 345KV CKT 1'	717	0.133	109.05	'GEN509394 1-FLINT CREEK'
13WP	00NR	2	'FROM->TO'	G11_051	'CIMARRON - DRAPER LAKE 345KV CKT 1'	717	0.133	109.03	'GEN334030 1-FRONTIER UNIT 1'
13WP	00NR	2	'FROM->TO'	G11_051	'CIMARRON - DRAPER LAKE 345KV CKT 1'	717	0.133	109.03	'GEN334031 1-FRONTIER UNIT 2'
13WP	00NR	2	'FROM->TO'	G11_051	'CIMARRON - DRAPER LAKE 345KV CKT 1'	717	0.133	109.02	'GEN509393 S1-ARSENAL HILL GENS #4 (STALL)'
13WP	00NR	2	'FROM->TO'	G11_051	'CIMARRON - DRAPER LAKE 345KV CKT 1'	717	0.133	109.02	'GEN334431 1-SABINE UNIT 1'
13WP	00NR	2	'FROM->TO'	G11_051	'CIMARRON - DRAPER LAKE 345KV CKT 1'	717	0.133	108.98	'GEN335612 1-WILLOW GLENN UNIT#2'
13WP	00NR	2	'FROM->TO'	G11_051	'CIMARRON - DRAPER LAKE 345KV CKT 1'	717	0.133	108.96	'GEN511843 1-RIVERSIDE STATION #2'
13WP	00NR	2	'FROM->TO'	G11_051	'CIMARRON - DRAPER LAKE 345KV CKT 1'	717	0.133	108.89	'GEN509391 G1-ARSENAL HILL GENS #2 (STALL)'
13WP	00NR	2	'FROM->TO'	G11_051	'CIMARRON - DRAPER LAKE 345KV CKT 1'	717	0.133	108.89	'GEN509392 G2-ARSENAL HILL GENS #3 (STALL)'
13WP	00NR	2	'FROM->TO'	G11_051	'CIMARRON - DRAPER LAKE 345KV CKT 1'	717	0.133	108.85	'GEN509408 1-WILKES #2'
13WP	00NR	2	'FROM->TO'	G11_051	'CIMARRON - DRAPER LAKE 345KV CKT 1'	717	0.133	108.83	'GEN512688 2-GRDA1 GSU2 22'
13WP	00NR	2	'FROM->TO'	G11_051	'CIMARRON - DRAPER LAKE 345KV CKT 1'	717	0.133	108.77	'GEN503909 1-FULTONU1 1 16.000'
13WP	00NR	2	'FROM->TO'	G11_051	'CIMARRON - DRAPER LAKE 345KV CKT 1'	717	0.133	108.73	'GEN337428 1-PERYVILLE UNIT #1'
13WP	00NR	2	'FROM->TO'	G11_051	'CIMARRON - DRAPER LAKE 345KV CKT 1'	717	0.133	108.73	'GEN337430 1-PERYVILLE UNIT #3'
13WP	00NR	2	'FROM->TO'	G11_051	'CIMARRON - DRAPER LAKE 345KV CKT 1'	717	0.133	108.71	'GEN512689 1-GRDA1 GSU1 22'
13WP	00NR	2	'FROM->TO'	G11_051	'CIMARRON - DRAPER LAKE 345KV CKT 1'	717	0.133	108.69	'GEN337429 1-PERYVILLE UNIT #2'
13WP	00NR	2	'FROM->TO'	G11_051	'CIMARRON - DRAPER LAKE 345KV CKT 1'	717	0.133	108.69	'GEN337432 1-PERYVILLE UNIT #5'
13WP	00NR	2	'FROM->TO'	G11_051	'CIMARRON - DRAPER LAKE 345KV CKT 1'	717	0.133	108.68	'GEN506752 1-LEBROCK GAS 1'
13WP	00NR	2	'FROM->TO'	G11_051	'CIMARRON - DRAPER LAKE 345KV CKT 1'	717	0.133	108.63	'GEN335075 1-DYNEGY#1'
13WP	00NR	2	'FROM->TO'	G11_051	'CIMARRON - DRAPER LAKE 345KV CKT 1'	717	0.133	108.62	'GEN336167 1-GULF OXY U1'
13WP	00NR	2	'FROM->TO'	G11_051	'CIMARRON - DRAPER LAKE 345KV CKT 1'	717	0.133	108.62	'GEN336168 1-GULF OXY U2'
13WP	00NR	2	'FROM->TO'	G11_051	'CIMARRON - DRAPER LAKE 345KV CKT 1'	717	0.133	108.62	'GEN336169 1-GULF OXY U3'
13WP	00NR	2	'FROM->TO'	G11_051	'CIMARRON - DRAPER LAKE 345KV CKT 1'	717	0.133	108.61	'GEN318007 1-5MOROW161 161.00'
13WP	00NR	2	'FROM->TO'	G11_051	'CIMARRON - DRAPER LAKE 345KV CKT 1'	717	0.133	108.61	'GEN335203 1-NELSON UNIT 3'
13WP	00NR	2	'FROM->TO'	G11_051	'CIMARRON - DRAPER LAKE 345KV CKT 1'	717	0.133	108.58	'GEN337421 1-OUCHITA CTG1'
13WP	00NR	2	'FROM->TO'	G11_051	'CIMARRON - DRAPER LAKE 345KV CKT 1'	717	0.133	108.58	'GEN337423 1-OUCHITA CTG2'
13WP	00NR	2	'FROM->TO'	G11_051	'CIMARRON - DRAPER LAKE 345KV CKT 1'	717	0.133	108.58	'GEN337425 1-OUCHITA CTG3'
13WP	00NR	2	'FROM->TO'	G11_051	'CIMARRON - DRAPER LAKE 345KV CKT 1'	717	0.133	108.56	'GEN511840 1-NORTHEASTERN STATION #3'
13WP	00NR	2	'FROM->TO'	G11_051	'CIMARRON - DRAPER LAKE 345KV CKT 1'	717	0.133	108.55	'GEN334392 1-EXXON MOBIL IPP 1'
13WP	00NR	2	'FROM->TO'	G11_051	'CIMARRON - DRAPER LAKE 345KV CKT 1'	717	0.133	108.54	'GEN511841 1-NORTHEASTERN STATION #4'
13WP	00NR	2	'FROM->TO'	G11_051	'CIMARRON - DRAPER LAKE 345KV CKT 1'	717	0.133	108.52	'GEN511839 1-NORTHEASTERN STATION #2'
13WP	00NR	2	'FROM->TO'	G11_051	'CIMARRON - DRAPER LAKE 345KV CKT 1'	717	0.133	108.48	'GEN337006 1-DUKE MCADAMS G1'
13WP	00NR	2	'FROM->TO'	G11_051	'CIMARRON - DRAPER LAKE 345KV CKT 1'	717	0.133	108.48	'GEN337007 1-DUKE MCADAMS G2'
13WP	00NR	2	'FROM->TO'	G11_051	'CIMARRON - DRAPER LAKE 345KV CKT 1'	717	0.133	108.46	'GEN337008 1-DUKE MCADAMS S1'
13WP	00NR	2	'FROM->TO'	G11_051	'CIMARRON - DRAPER LAKE 345KV CKT 1'	717	0.133	108.44	'GEN505432 1-SIKESTON'
13WP	00NR	2	'FROM->TO'	G11_051	'CIMARRON - DRAPER LAKE 345KV CKT 1'	717	0.133	108.41	'GEN338500 1-MCCLELLAN UNIT #1'
13WP	00NR	2	'FROM->TO'	G11_051	'CIMARRON - DRAPER LAKE 345KV CKT 1'	717	0.133	108.34	'GEN515266 1-AES 1G'

SEASON	GROUP	SCENARIO	DIRECTION	SOURCE	MONITORED ELEMENT	RATE B (MVA)	TDF	(%MVA) LOADING	CONTINGENCY
13WP	00NR	2	'FROM->TO'	G11_051	'CIMARRON - DRAPER LAKE 345KV CKT 1'	717	0.133	108.34	'GEN515267 1-AES 2G'
13WP	00NR	2	'FROM->TO'	G11_051	'CIMARRON - DRAPER LAKE 345KV CKT 1'	717	0.133	108.31	'GEN335611 1-WILLOW GLENN UNIT#1'
13WP	00NR	2	'FROM->TO'	G11_051	'CIMARRON - DRAPER LAKE 345KV CKT 1'	717	0.133	108.30	'GEN562053 1-G11_040_4 0.6900'
13WP	00NR	2	'FROM->TO'	G11_051	'CIMARRON - DRAPER LAKE 345KV CKT 1'	717	0.133	108.29	'GEN337954 1-LYNCH UNIT #3'
13WP	00NR	2	'FROM->TO'	G11_051	'CIMARRON - DRAPER LAKE 345KV CKT 1'	717	0.133	108.29	'GEN511938 1-OEC STEAM # 1'
13WP	00NR	2	'FROM->TO'	G11_051	'CIMARRON - DRAPER LAKE 345KV CKT 1'	717	0.133	108.27	'GEN335201 1-NELSON UNIT 1'
13WP	00NR	2	'FROM->TO'	G11_051	'CIMARRON - DRAPER LAKE 345KV CKT 1'	717	0.133	108.25	'GEN335202 1-NELSON UNIT 2'
13WP	00NR	2	'FROM->TO'	G11_051	'CIMARRON - DRAPER LAKE 345KV CKT 1'	717	0.133	108.24	'7JASPER 345.00 - BLACKBERRY 345KV CKT 1'
13WP	00NR	2	'FROM->TO'	G11_051	'CIMARRON - DRAPER LAKE 345KV CKT 1'	717	0.133	108.23	'GEN336944 1-REX BROWN'
13WP	00NR	2	'FROM->TO'	G11_051	'CIMARRON - DRAPER LAKE 345KV CKT 1'	717	0.133	108.22	'GEN506749 1-EASTMAN GENERATION A'
13WP	00NR	2	'FROM->TO'	G11_051	'CIMARRON - DRAPER LAKE 345KV CKT 1'	717	0.133	108.18	'GEN511842 1-RIVERSIDE STATION #1'
13WP	00NR	2	'FROM->TO'	G11_051	'CIMARRON - DRAPER LAKE 345KV CKT 1'	717	0.133	108.17	'GEN562052 1-G11_040_3 0.6900'
13WP	00NR	2	'FROM->TO'	G11_051	'CIMARRON - DRAPER LAKE 345KV CKT 1'	717	0.133	108.16	'GEN337422 1-OUCHITA STG1'
13WP	00NR	2	'FROM->TO'	G11_051	'CIMARRON - DRAPER LAKE 345KV CKT 1'	717	0.133	108.16	'GEN337424 1-OUCHITA STG2'
13WP	00NR	2	'FROM->TO'	G11_051	'CIMARRON - DRAPER LAKE 345KV CKT 1'	717	0.133	108.16	'GEN337426 1-OUCHITA STG3'
13WP	00NR	2	'FROM->TO'	G11_051	'CIMARRON - DRAPER LAKE 345KV CKT 1'	717	0.133	108.13	'GEN335137 C4-PPG'
13WP	00NR	2	'FROM->TO'	G11_051	'CIMARRON - DRAPER LAKE 345KV CKT 1'	717	0.133	108.13	'GEN338510 1-1S1KNWRI'
13WP	00NR	2	'FROM->TO'	G11_051	'CIMARRON - DRAPER LAKE 345KV CKT 1'	717	0.133	108.13	'GEN338511 1-1C7KNWRI'
13WP	00NR	2	'FROM->TO'	G11_051	'CIMARRON - DRAPER LAKE 345KV CKT 1'	717	0.133	108.11	'GEN338513 1-BAILEY UNIT #1'
13WP	00NR	2	'FROM->TO'	G11_051	'CIMARRON - DRAPER LAKE 345KV CKT 1'	717	0.133	108.11	'GEN300003 1-THOMAS HILL UNIT 3'
13WP	00NR	2	'FROM->TO'	G11_051	'CIMARRON - DRAPER LAKE 345KV CKT 1'	717	0.133	108.06	'GEN500915 3-WESTERN KRAFT'
13WP	00NR	2	'FROM->TO'	G11_051	'CIMARRON - DRAPER LAKE 345KV CKT 1'	717	0.133	108.05	'GEN549893 2-SOUTHWEST 2'
13WP	00NR	2	'FROM->TO'	G11_051	'CIMARRON - DRAPER LAKE 345KV CKT 1'	717	0.133	108.05	'GEN300015 1-1SGPDEL 18.000'
13WP	00NR	2	'FROM->TO'	G11_051	'CIMARRON - DRAPER LAKE 345KV CKT 1'	717	0.133	108.05	'GEN300016 1-1G1GPDEL 18.000'
13WP	00NR	2	'FROM->TO'	G11_051	'CIMARRON - DRAPER LAKE 345KV CKT 1'	717	0.133	108.05	'GEN300017 1-1G2GPDEL 18.000'
13WP	00NR	2	'FROM->TO'	G11_051	'CIMARRON - DRAPER LAKE 345KV CKT 1'	717	0.133	108.04	'GEN503900 1-FITZHUGH CT1'
13WP	00NR	2	'FROM->TO'	G11_051	'CIMARRON - DRAPER LAKE 345KV CKT 1'	717	0.133	108.03	'GEN501910 1-ACADIA UNIT ST1'
13WP	00NR	2	'FROM->TO'	G11_051	'CIMARRON - DRAPER LAKE 345KV CKT 1'	717	0.133	108.03	'GEN334335 1-TOLEDO BEND'
13WP	00NR	2	'FROM->TO'	G11_051	'CIMARRON - DRAPER LAKE 345KV CKT 1'	717	0.133	108.02	'GEN334467 1-DUPONT UNIT#1'
13WP	00NR	2	'FROM->TO'	G11_051	'CIMARRON - DRAPER LAKE 345KV CKT 1'	717	0.133	108.01	'GEN335546 3-DOW COGEN'
13WP	00NR	2	'FROM->TO'	G11_051	'CIMARRON - DRAPER LAKE 345KV CKT 1'	717	0.133	108.01	'GEN337124 5-LS POWER BATESVILLE'
13WP	00NR	2	'FROM->TO'	G11_051	'CIMARRON - DRAPER LAKE 345KV CKT 1'	717	0.133	107.99	'GEN318008 3-5MOSEL161 161.00'
13WP	00NR	2	'FROM->TO'	G11_051	'CIMARRON - DRAPER LAKE 345KV CKT 1'	717	0.133	107.99	'A059'
13WP	00NR	2	'FROM->TO'	G11_051	'CIMARRON - DRAPER LAKE 345KV CKT 1'	717	0.133	107.99	'EUREKA SPRIN'
13WP	00NR	2	'FROM->TO'	G11_051	'CIMARRON - DRAPER LAKE 345KV CKT 1'	717	0.133	107.97	'GEN336176 1-UNION CARBIDE COGEN GT1'
13WP	00NR	2	'FROM->TO'	G11_051	'CIMARRON - DRAPER LAKE 345KV CKT 1'	717	0.133	107.97	'GEN336177 1-UNION CARBIDE COGEN GT2'
13WP	00NR	2	'FROM->TO'	G11_051	'CIMARRON - DRAPER LAKE 345KV CKT 1'	717	0.133	107.95	'GEN509409 1-WILKES #3'
13WP	00NR	2	'FROM->TO'	G11_051	'CIMARRON - DRAPER LAKE 345KV CKT 1'	717	0.133	107.94	'CELE-WELLOP1'
13WP	00NR	2	'FROM->TO'	G11_051	'CIMARRON - DRAPER LAKE 345KV CKT 1'	717	0.133	107.47	'BASE CASE'
13WP	00NR	2	'FROM->TO'	G11_051	'CIMARRON - DRAPER LAKE 345KV CKT 1'	717	0.133	107.06	'DRAPER LAKE - DRPCAPS4 138.00 138KV CKT 1'
13WP	00NR	2	'FROM->TO'	G11_051	'CIMARRON - DRAPER LAKE 345KV CKT 1'	717	0.133	106.98	'LONGWOOD - WILKES 345KV CKT 1'
13WP	00NR	2	'FROM->TO'	G11_051	'CIMARRON - DRAPER LAKE 345KV CKT 1'	717	0.133	106.96	'GEN532663 1-LAWRENCE ENERGY CENTER UNIT 5'
13WP	00NR	2	'FROM->TO'	G11_051	'CIMARRON - DRAPER LAKE 345KV CKT 1'	717	0.133	106.94	'GEN542957 1-IATAN UNIT #1'
13WP	00NR	2	'FROM->TO'	G11_051	'CIMARRON - DRAPER LAKE 345KV CKT 1'	717	0.133	106.93	'GEN542956 2-LACYGNE UNIT #2'
13WP	00NR	2	'FROM->TO'	G11_051	'CIMARRON - DRAPER LAKE 345KV CKT 1'	717	0.133	106.91	'GEN542955 1-LACYGNE UNIT #1'
13WP	00NR	2	'FROM->TO'	G11_051	'CIMARRON - DRAPER LAKE 345KV CKT 1'	717	0.133	106.90	'GEN542962 2-IATAN UNIT #2'
13WP	00NR	2	'FROM->TO'	G11_051	'CIMARRON - DRAPER LAKE 345KV CKT 1'	717	0.133	106.83	'GEN640009 1-COOPER NUCLEAR STATION'
13WP	00NR	2	'FROM->TO'	G11_051	'CIMARRON - DRAPER LAKE 345KV CKT 1'	717	0.133	106.78	'WELSH - WILKES 345KV CKT 1'
13WP	00NR	2	'FROM->TO'	G11_051	'CIMARRON - DRAPER LAKE 345KV CKT 1'	717	0.133	106.75	'GEN562092 1-G11_058_4 0.6900'
13WP	00NR	2	'FROM->TO'	G11_051	'CIMARRON - DRAPER LAKE 345KV CKT 1'	717	0.133	106.72	'GEN562094 1-G11_058_5 0.6900'
13WP	00NR	2	'FROM->TO'	G11_051	'CIMARRON - DRAPER LAKE 345KV CKT 1'	717	0.133	106.66	'GEN562049 1-G11_012_3 0.6900'
13WP	00NR	2	'FROM->TO'	G11_051	'CIMARRON - DRAPER LAKE 345KV CKT 1'	717	0.133	106.66	'GEN523462 1-BLACKHAWK GEN #2'
13WP	00NR	2	'FROM->TO'	G11_051	'CIMARRON - DRAPER LAKE 345KV CKT 1'	717	0.133	106.66	'GEN523461 1-BLACKHAWK GEN #1'
13WP	00NR	2	'FROM->TO'	G11_051	'CIMARRON - DRAPER LAKE 345KV CKT 1'	717	0.133	106.64	'SPP-AEPW-04'
13WP	00NR	2	'FROM->TO'	G11_051	'CIMARRON - DRAPER LAKE 345KV CKT 1'	717	0.133	106.62	'GEN560386 1-G10-029-1 0.6900'
13WP	00NR	2	'FROM->TO'	G11_051	'CIMARRON - DRAPER LAKE 345KV CKT 1'	717	0.133	106.62	'GEN560387 1-G10-029-2 0.6900'
13WP	00NR	2	'FROM->TO'	G11_051	'CIMARRON - DRAPER LAKE 345KV CKT 1'	717	0.133	106.62	'GEN560388 1-G10-029-3 0.6900'
13WP	00NR	2	'FROM->TO'	G11_051	'CIMARRON - DRAPER LAKE 345KV CKT 1'	717	0.133	106.61	'GEN562059 1-G11_042_3 0.6900'
13WP	00NR	2	'FROM->TO'	G11_051	'CIMARRON - DRAPER LAKE 345KV CKT 1'	717	0.133	106.58	'GEN560669 1-G10_057 0.6900'
13WP	00NR	2	'FROM->TO'	G11_051	'CIMARRON - DRAPER LAKE 345KV CKT 1'	717	0.133	106.58	'GEN560714 1-G10_061_3 0.6900'
13WP	00NR	2	'FROM->TO'	G11_051	'CIMARRON - DRAPER LAKE 345KV CKT 1'	717	0.133	106.48	'GEN562065 1-G11_044_3 0.6900'
13WP	00NR	2	'FROM->TO'	G11_051	'CIMARRON - DRAPER LAKE 345KV CKT 1'	717	0.133	106.46	'GEN527165 1-Mustang Gen #5'
13WP	00NR	2	'FROM->TO'	G11_051	'CIMARRON - DRAPER LAKE 345KV CKT 1'	717	0.133	106.46	'GEN527164 1-MUSTANG GEN #4 22 KV'
13WP	00NR	2	'FROM->TO'	G11_051	'CIMARRON - DRAPER LAKE 345KV CKT 1'	717	0.133	106.45	'GEN532653 1-JEFFREY ENERGY CENTER UNIT 3'
13WP	00NR	2	'FROM->TO'	G11_051	'CIMARRON - DRAPER LAKE 345KV CKT 1'	717	0.133	106.45	'GEN527901 1-HOBBS PLANT #1 (CT)'
13WP	00NR	2	'FROM->TO'	G11_051	'CIMARRON - DRAPER LAKE 345KV CKT 1'	717	0.133	106.44	'GEN527902 1-HOBBS PLANT #2 (CT)'
13WP	00NR	2	'FROM->TO'	G11_051	'CIMARRON - DRAPER LAKE 345KV CKT 1'	717	0.133	106.42	'GEN532651 1-JEFFREY ENERGY CENTER UNIT 1'
13WP	00NR	2	'FROM->TO'	G11_051	'CIMARRON - DRAPER LAKE 345KV CKT 1'	717	0.133	106.41	'GEN532652 1-JEFFREY ENERGY CENTER UNIT 2'
13WP	00NR	2	'FROM->TO'	G11_051	'CIMARRON - DRAPER LAKE 345KV CKT 1'	717	0.133	106.40	'GEN527163 1-MUSTANG GEN #3 22 KV'
13WP	00NR	2	'FROM->TO'	G11_051	'CIMARRON - DRAPER LAKE 345KV CKT 1'	717	0.133	106.38	'GEN527161 1-MUSTANG GEN #1'
13WP	00NR	2	'FROM->TO'	G11_051	'CIMARRON - DRAPER LAKE 345KV CKT 1'	717	0.133	106.37	'GEN640011 2-GERALD GENTLEMAN STATION UNIT 2'
13WP	00NR	2	'FROM->TO'	G11_051	'CIMARRON - DRAPER LAKE 345KV CKT 1'	717	0.133	106.37	'GEN527162 1-MUSTANG GEN #2'
13WP	00NR	2	'FROM->TO'	G11_051	'CIMARRON - DRAPER LAKE 345KV CKT 1'	717	0.133	106.36	'GEN562071 1-G11_048_2 18.000'
13WP	00NR	2	'FROM->TO'	G11_051	'CIMARRON - DRAPER LAKE 345KV CKT 1'	717	0.133	106.36	'GEN560600 1-G07-02 15.750'
13WP	00NR	2	'FROM->TO'	G11_051	'CIMARRON - DRAPER LAKE 345KV CKT 1'	717	0.133	106.35	'GEN562035 1-G11_016_3 0.6900'
13WP	00NR	2	'FROM->TO'	G11_051	'CIMARRON - DRAPER LAKE 345KV CKT 1'	717	0.133	106.29	'GEN560356 1-G10-53 0.6900'
13WP	00NR	2	'FROM->TO'	G11_051	'CIMARRON - DRAPER LAKE 345KV CKT 1'	717	0.133	106.26	'GEN520997 1-MORLND2'
13WP	00NR	2	'FROM->TO'	G11_051	'CIMARRON - DRAPER LAKE 345KV CKT 1'	717	0.133	106.25	'GEN562078 1-G11_051_3 0.6900'

SEASON	GROUP	SCENARIO	DIRECTION	SOURCE	MONITORED ELEMENT	RATE B (MVA)	TDF	(%MVA) LOADING	CONTINGENCY
13WP	00NR	2	'FROM->TO'	G11_051	'CIMARRON - DRAPER LAKE 345KV CKT 1'	717	0.133	106.25	'LYDIA - WELSH 345KV CKT 1'
13WP	00NR	2	'FROM->TO'	G11_051	'CIMARRON - DRAPER LAKE 345KV CKT 1'	717	0.133	106.22	'GEN560329 1-G10-45 0.6900'
13WP	00NR	2	'FROM->TO'	G11_051	'CIMARRON - DRAPER LAKE 345KV CKT 1'	717	0.133	106.20	'GEN527903 1-HOBBS PLANT #3 (ST)'
13WP	00NR	2	'FROM->TO'	G11_051	'CIMARRON - DRAPER LAKE 345KV CKT 1'	717	0.133	106.18	'GEN520998 1-MORLND3'
13WP	00NR	2	'FROM->TO'	G11_051	'CIMARRON - DRAPER LAKE 345KV CKT 1'	717	0.133	106.18	'GEN640010 1-GERALD GENTLEMAN STATION UNIT 1'
13WP	00NR	2	'FROM->TO'	G11_051	'CIMARRON - DRAPER LAKE 345KV CKT 1'	717	0.133	105.99	'GEN562032 1-G11_017_3 0.6900'
13WP	00NR	2	'FROM->TO'	G11_051	'CIMARRON - DRAPER LAKE 345KV CKT 1'	717	0.133	105.94	'GEN526333 1-JONES GEN #3 21 KV'
13WP	00NR	2	'FROM->TO'	G11_051	'CIMARRON - DRAPER LAKE 345KV CKT 1'	717	0.133	105.94	'GEN526334 1-JONES_4 116.500'
13WP	00NR	2	'FROM->TO'	G11_051	'CIMARRON - DRAPER LAKE 345KV CKT 1'	717	0.133	105.93	'GEN599891 1-OKLAUN'
13WP	00NR	2	'FROM->TO'	G11_051	'CIMARRON - DRAPER LAKE 345KV CKT 1'	717	0.133	105.86	'GEN514805 1-SOONER UNIT 1'
13WP	00NR	2	'FROM->TO'	G11_051	'CIMARRON - DRAPER LAKE 345KV CKT 1'	717	0.133	105.77	'GEN562042 1-G11_014_3 0.6900'
13WP	00NR	2	'FROM->TO'	G11_051	'CIMARRON - DRAPER LAKE 345KV CKT 1'	717	0.133	105.75	'GEN562014 1-G11_023_3 0.6900'
13WP	00NR	2	'FROM->TO'	G11_051	'CIMARRON - DRAPER LAKE 345KV CKT 1'	717	0.133	105.53	'GEN514806 1-SOONER UNIT 2'
13WP	00NR	2	'FROM->TO'	G11_051	'CIMARRON - DRAPER LAKE 345KV CKT 1'	717	0.133	105.49	'GEN531447 1-HOLCOMB GENERATOR'
13WP	00NR	2	'FROM->TO'	G11_051	'CIMARRON - DRAPER LAKE 345KV CKT 1'	717	0.133	105.24	'GEN562074 1-G11_049_3 0.6900'
13WP	00NR	2	'FROM->TO'	G11_051	'CIMARRON - DRAPER LAKE 345KV CKT 1'	717	0.133	105.07	'GEN562020 1-G11_021_3 0.6900'
13WP	00NR	2	'FROM->TO'	G11_051	'CIMARRON - DRAPER LAKE 345KV CKT 1'	717	0.133	105.03	'GEN562017 1-G11_022_3 0.6900'
13WP	00NR	2	'FROM->TO'	G11_051	'CIMARRON - DRAPER LAKE 345KV CKT 1'	717	0.133	104.95	'GEN523971 1-HARRINGTON GEN #1 24 KV'
13WP	00NR	2	'FROM->TO'	G11_051	'CIMARRON - DRAPER LAKE 345KV CKT 1'	717	0.133	104.85	'GEN523972 1-HARRINGTON GEN #2 24 KV'
13WP	00NR	2	'FROM->TO'	G11_051	'CIMARRON - DRAPER LAKE 345KV CKT 1'	717	0.133	104.85	'GEN523973 1-HARRINGTON GEN #3 24 KV'
13WP	00NR	2	'FROM->TO'	G11_051	'CIMARRON - DRAPER LAKE 345KV CKT 1'	717	0.133	104.58	'GEN562023 1-G11_020_3 0.6900'
13WP	00NR	2	'FROM->TO'	G11_051	'CIMARRON - DRAPER LAKE 345KV CKT 1'	717	0.133	104.58	'GEN562026 1-G11_019_3 0.6900'
13WP	00NR	2	'FROM->TO'	G11_051	'CIMARRON - DRAPER LAKE 345KV CKT 1'	717	0.133	104.46	'GEN560225 1-G10-43 18.000'
13WP	00NR	2	'FROM->TO'	G11_051	'CIMARRON - DRAPER LAKE 345KV CKT 1'	717	0.133	103.99	'GEN532751 1-WOLF CREEK GENERATING STATION UNIT 1'
13WP	00NR	2	'FROM->TO'	G11_051	'CIMARRON - DRAPER LAKE 345KV CKT 1'	717	0.133	103.68	'GEN525562 1-TOLK GEN #2 24 KV'
13WP	00NR	2	'FROM->TO'	G11_051	'CIMARRON - DRAPER LAKE 345KV CKT 1'	717	0.133	103.62	'GEN525561 1-TOLK GEN #1 24 KV'
13WP	00NR	2	'FROM->TO'	G11_051	'CIMARRON - DRAPER LAKE 345KV CKT 1'	717	0.133	103.41	'GEN562010 1-G11_024_3 0.6900'
13WP	00NR	2	'FROM->TO'	G11_051	'CIMARRON - DRAPER LAKE 345KV CKT 1'	717	0.133	103.39	'GEN560687 1-G11-007 0.5750'
13WP	00NR	2	'FROM->TO'	G11_051	'CIMARRON - DRAPER LAKE 345KV CKT 1'	717	0.133	101.03	'GEN560323 1-G10-40 0.6900'
13WP	00NR	2	'FROM->TO'	G11_051	'CIMARRON - DRAPER LAKE 345KV CKT 1'	717	0.133	100.88	'GEN562100 1-G11_054_3 0.6900'
13WP	00NR	2	'FROM->TO'	G11_051	'CIMARRON - DRAPER LAKE 345KV CKT 1'	717	0.133	109.23	'OGE3TERM47'
13WP	00NR	2	'FROM->TO'	G11_051	'CIMARRON - DRAPER LAKE 345KV CKT 1'	717	0.133	106.40	'NORTHWEST TEXARKANA - VALLIANT 345KV CKT 1'
13WP	00NR	2	'FROM->TO'	G11_051	'CIMARRON - DRAPER LAKE 345KV CKT 1'	717	0.133	105.67	'LYDIA - VALLIANT 345KV CKT 1'
13WP	00NR	2	'FROM->TO'	G11_051	'CIMARRON - DRAPER LAKE 345KV CKT 1'	717	0.133	105.25	'SPP-AEPW-01'
13WP	00NR	2	'FROM->TO'	G11_051	'CIMARRON - DRAPER LAKE 345KV CKT 1'	717	0.133	108.48	'7SAREPT 345.00 - ELDORADO EHV 345KV CKT 1'
13WP	00NR	2	'FROM->TO'	G11_051	'CIMARRON - DRAPER LAKE 345KV CKT 1'	717	0.133	108.48	'A222'
13WP	00NR	2	'FROM->TO'	G11_051	'CIMARRON - DRAPER LAKE 345KV CKT 1'	717	0.133	108.48	'ELDORADO EHV 500/345KV TRANSFORMER CKT 1'
13WP	00NR	2	'FROM->TO'	G11_051	'CIMARRON - DRAPER LAKE 345KV CKT 1'	717	0.133	108.46	'7SAREPT 345.00 - LONGWOOD 345KV CKT 1'
13WP	00NR	2	'FROM->TO'	G11_051	'CIMARRON - DRAPER LAKE 345KV CKT 1'	717	0.133	108.23	'ELDORADO EHV - SHERIDAN EHV 500KV CKT 1'
13WP	00NR	2	'FROM->TO'	G11_051	'CIMARRON - DRAPER LAKE 345KV CKT 1'	717	0.133	107.98	'WOODRING (WOODRNG2) 345/138/13.8KV TRANSFORMER CKT 1'
13WP	00NR	2	'FROM->TO'	G11_051	'CIMARRON - DRAPER LAKE 345KV CKT 1'	717	0.133	106.71	'FIXICO TAP - MAUD 138KV CKT 1'
17WP	00NR	2	'FROM->TO'	G11_051	'CIMARRON - DRAPER LAKE 345KV CKT 1'	717	0.133	100.90	'LAWTON EASTSIDE - OKLAUNION 345KV CKT 1'
13WP	00NR	2	'FROM->TO'	G11_051	'CIMARRON - DRAPER LAKE 345KV CKT 1'	717	0.133	106.98	'FIXICO TAP - WELEETKA 138KV CKT 1'
13WP	00NR	2	'FROM->TO'	G11_051	'CIMARRON - DRAPER LAKE 345KV CKT 1'	717	0.133	106.74	'OGE3TERM36'
13WP	00NR	2	'FROM->TO'	G11_051	'CIMARRON - DRAPER LAKE 345KV CKT 1'	717	0.133	109.37	'MORISNT4 138.00 - STILLWATER 138KV CKT 1'
13WP	00NR	2	'FROM->TO'	G11_051	'CIMARRON - DRAPER LAKE 345KV CKT 1'	717	0.133	108.68	'MCELROY - STILLWATER 138KV CKT 1'
13WP	00NR	2	'FROM->TO'	G11_051	'CIMARRON - DRAPER LAKE 345KV CKT 1'	717	0.133	108.43	'KINZE - MCELROY 138KV CKT 1'
13WP	00NR	2	'FROM->TO'	G11_051	'CIMARRON - DRAPER LAKE 345KV CKT 1'	717	0.133	109.44	'ARCADIA - KAMO MEMORIAL 138KV CKT 1'
13WP	00NR	2	'FROM->TO'	G11_051	'CIMARRON - DRAPER LAKE 345KV CKT 1'	717	0.133	107.01	'HIGHLAND - PINK SW 138KV CKT 1'
13WP	00NR	2	'FROM->TO'	G11_051	'CIMARRON - DRAPER LAKE 345KV CKT 1'	717	0.133	108.02	'MORISNT4 138.00 - SOONER 138KV CKT 1'
13WP	00NR	2	'FROM->TO'	G11_051	'CIMARRON - DRAPER LAKE 345KV CKT 1'	717	0.133	104.98	'OGE3TERM23'
13WP	00NR	2	'FROM->TO'	G11_051	'CIMARRON - DRAPER LAKE 345KV CKT 1'	717	0.133	104.98	'BARNES 4 138.00 - DRAPER LAKE 138KV CKT 1'
13WP	00NR	2	'FROM->TO'	G11_051	'CIMARRON - DRAPER LAKE 345KV CKT 1'	717	0.133	108.33	'HOLLYWOOD - PLEASANT VALLEY 138KV CKT 1'
13WP	00NR	2	'FROM->TO'	G11_051	'CIMARRON - DRAPER LAKE 345KV CKT 1'	717	0.133	108.38	'ARCADIA - OMPA-EDMOND GARBER(LAKE) 138KV CKT 1'
13WP	00NR	2	'FROM->TO'	G11_051	'CIMARRON - DRAPER LAKE 345KV CKT 1'	717	0.133	108.31	'CHITWOOD - OMPA-EDMOND GARBER(LAKE) 138KV CKT 1'
13WP	00NR	2	'FROM->TO'	G11_051	'CIMARRON - DRAPER LAKE 345KV CKT 1'	717	0.133	108.29	'CHITWOOD - JONES TAP 138KV CKT 1'
13WP	00NR	2	'FROM->TO'	G11_051	'CIMARRON - DRAPER LAKE 345KV CKT 1'	717	0.133	109.12	'HORSESHOE LAKE - KAMO MEMORIAL 138KV CKT 1'
17WP	00NR	2	'FROM->TO'	G11_051	'CIMARRON - DRAPER LAKE 345KV CKT 1'	717	0.133	101.16	'CANEYRV7 345.00 - NEOSHO 345KV CKT 1'
17WP	00NR	2	'FROM->TO'	G11_051	'CIMARRON - DRAPER LAKE 345KV CKT 1'	717	0.133	101.01	'CANEYRV7 345.00 - LATHAMS7 345.00 345KV CKT 1'
17WP	00NR	2	'FROM->TO'	G11_051	'CIMARRON - DRAPER LAKE 345KV CKT 1'	717	0.133	100.52	'LATHAMS7 345.00 - ROSE HILL 345KV CKT 1'
13WP	00NR	2	'FROM->TO'	G11_051	'CIMARRON - DRAPER LAKE 345KV CKT 1'	717	0.133	106.28	'FRANKLIN - PINK SW 138KV CKT 1'
13WP	00NR	2	'FROM->TO'	G11_051	'CIMARRON - DRAPER LAKE 345KV CKT 1'	717	0.133	106.01	'FRANKLIN - FRANKLIN SW 138KV CKT 1'
13WP	00NR	2	'FROM->TO'	G11_051	'CIMARRON - DRAPER LAKE 345KV CKT 1'	717	0.133	109.22	'MCCLAIN - PLEASANT VALLEY 138KV CKT 1'
13WP	00NR	2	'FROM->TO'	G11_051	'CIMARRON - DRAPER LAKE 345KV CKT 1'	717	0.133	106.51	'SEMINOLE (SEMINOL2) 345/138/14.4KV TRANSFORMER CKT 1'
13WP	00NR	2	'FROM->TO'	G11_051	'CIMARRON - DRAPER LAKE 345KV CKT 1'	717	0.133	106.50	'SEMINOLE (SEMINOL1) 345/138/14.4KV TRANSFORMER CKT 1'
17WP	00NR	2	'FROM->TO'	G11_051	'CIMARRON - DRAPER LAKE 345KV CKT 1'	717	0.132	101.22	'GRACEMONT - MINCO 345KV CKT 1'
17WP	00NR	2	'FROM->TO'	G11_051	'CIMARRON - DRAPER LAKE 345KV CKT 1'	717	0.132	100.67	'CIMARRON - MINCO 345KV CKT 1'
17WP	00NR	2	'FROM->TO'	G11_051	'CIMARRON - DRAPER LAKE 345KV CKT 1'	717	0.132	100.22	'ANADARKO - BLANCHARD 138KV CKT 1'
13WP	00NR	2	'FROM->TO'	G11_051	'CIMARRON - DRAPER LAKE 345KV CKT 1'	717	0.132	103.71	'TATONGA7 345.00 - WOODWARD DISTRICT EHV 345KV CKT 2'
17WP	00NR	2	'FROM->TO'	G11_051	'CIMARRON - DRAPER LAKE 345KV CKT 1'	717	0.132	100.00	'ANADARKO - POCASSETT 138KV CKT 1'
17WP	00NR	2	'FROM->TO'	G11_051	'CIMARRON - DRAPER LAKE 345KV CKT 1'	717	0.132	100.34	'REDBUD - RIVERSIDE STATION 345KV CKT 1'
13WP	00NR	2	'FROM->TO'	G11_051	'CIMARRON - DRAPER LAKE 345KV CKT 1'	717	0.131	106.41	'G08-13T 345.00 - SUMNERCO 345.00 345KV CKT 1'
13WP	00NR	2	'FROM->TO'	G11_051	'CIMARRON - DRAPER LAKE 345KV CKT 1'	717	0.131	106.24	'G08-13T 345.00 - WOODRING 345KV CKT 1'
17WP	00NR	2	'FROM->TO'	G11_051	'CIMARRON - DRAPER LAKE 345KV CKT 1'	717	0.131	101.45	'ANDERSONCO 345.00 - LACYGNE 345KV CKT 1'
17WP	00NR	2	'FROM->TO'	G11_051	'CIMARRON - DRAPER LAKE 345KV CKT 1'	717	0.131	101.33	'ANDERSONCO 345.00 - WOLF CREEK 345KV CKT 1'
17WP	00NR	2	'FROM->TO'	G11_051	'CIMARRON - DRAPER LAKE 345KV CKT 1'	717	0.131	100.26	'OGE3TERM14'
17WP	00NR	2	'FROM->TO'	G11_051	'CIMARRON - DRAPER LAKE 345KV CKT 1'	717	0.131	100.00	'OGE3TERM12'
17WP	00NR	2	'FROM->TO'	G11_051	'CIMARRON - DRAPER LAKE 345KV CKT 1'	717	0.131	106.14	'GEN336821 1-GRAND GULF UNIT'

SEASON	GROUP	SCENARIO	DIRECTION	SOURCE	MONITORED ELEMENT	RATE B (MVA)	TDF	(%MVA) LOADING	CONTINGENCY
17WP	00NR	2	'FROM->TO'	G11_051	'CIMARRON - DRAPER LAKE 345KV CKT 1'	717	0.131	105.78	'GEN336153 1-WATERFORD UNIT#3'
17WP	00NR	2	'FROM->TO'	G11_051	'CIMARRON - DRAPER LAKE 345KV CKT 1'	717	0.131	104.90	'GEN337911 1-ARKANSAS NUCLEAR ONE UNIT #2'
17WP	00NR	2	'FROM->TO'	G11_051	'CIMARRON - DRAPER LAKE 345KV CKT 1'	717	0.131	104.78	'GEN335831 1-RIVERBEND UNIT#1'
17WP	00NR	2	'FROM->TO'	G11_051	'CIMARRON - DRAPER LAKE 345KV CKT 1'	717	0.131	104.19	'GEN501801 1-DOLET HILLS UNIT1'
17WP	00NR	2	'FROM->TO'	G11_051	'CIMARRON - DRAPER LAKE 345KV CKT 1'	717	0.131	103.86	'GEN337910 1-ARKANSAS NUCLEAR ONE UNIT #1'
17WP	00NR	2	'FROM->TO'	G11_051	'CIMARRON - DRAPER LAKE 345KV CKT 1'	717	0.131	103.03	'GEN337652 1-WHITE BLUFF UNIT #1'
17WP	00NR	2	'FROM->TO'	G11_051	'CIMARRON - DRAPER LAKE 345KV CKT 1'	717	0.131	102.84	'GEN336252 1-NINEMILE POINT UNIT#5'
17WP	00NR	2	'FROM->TO'	G11_051	'CIMARRON - DRAPER LAKE 345KV CKT 1'	717	0.131	102.70	'GEN336251 1-NINEMILE POINT UNIT#4'
17WP	00NR	2	'FROM->TO'	G11_051	'CIMARRON - DRAPER LAKE 345KV CKT 1'	717	0.131	102.62	'GEN337653 1-WHITE BLUFF UNIT #2'
17WP	00NR	2	'FROM->TO'	G11_051	'CIMARRON - DRAPER LAKE 345KV CKT 1'	717	0.131	102.48	'GEN501813 1-RODEMACHER UNIT 3'
17WP	00NR	2	'FROM->TO'	G11_051	'CIMARRON - DRAPER LAKE 345KV CKT 1'	717	0.131	102.45	'GEN338146 1-INDEPENDENCE UNIT #2'
17WP	00NR	2	'FROM->TO'	G11_051	'CIMARRON - DRAPER LAKE 345KV CKT 1'	717	0.131	102.28	'GEN337041 1-GERALD ANDRUS'
17WP	00NR	2	'FROM->TO'	G11_051	'CIMARRON - DRAPER LAKE 345KV CKT 1'	717	0.131	102.28	'GEN338143 1-INDEPENDENCE UNIT #1'
17WP	00NR	2	'FROM->TO'	G11_051	'CIMARRON - DRAPER LAKE 345KV CKT 1'	717	0.131	101.95	'GEN335206 1-NELSON UNIT 6'
17WP	00NR	2	'FROM->TO'	G11_051	'CIMARRON - DRAPER LAKE 345KV CKT 1'	717	0.131	101.92	'GEN334440 1-SABINE UNIT 4'
17WP	00NR	2	'FROM->TO'	G11_051	'CIMARRON - DRAPER LAKE 345KV CKT 1'	717	0.131	101.91	'GEN336831 1-BAXTER WILSON SES'
17WP	00NR	2	'FROM->TO'	G11_051	'CIMARRON - DRAPER LAKE 345KV CKT 1'	717	0.131	101.89	'GEN501812 1-RODEMACHER UNIT 2'
17WP	00NR	2	'FROM->TO'	G11_051	'CIMARRON - DRAPER LAKE 345KV CKT 1'	717	0.131	101.45	'GEN334441 1-SABINE UNIT 5'
17WP	00NR	2	'FROM->TO'	G11_051	'CIMARRON - DRAPER LAKE 345KV CKT 1'	717	0.131	101.32	'GEN335204 1-NELSON UNIT 4'
17WP	00NR	2	'FROM->TO'	G11_051	'CIMARRON - DRAPER LAKE 345KV CKT 1'	717	0.131	101.06	'GEN334433 1-SABINE UNIT 3'
17WP	00NR	2	'FROM->TO'	G11_051	'CIMARRON - DRAPER LAKE 345KV CKT 1'	717	0.131	101.00	'GEN336801 1-BAXTER WILSON UNIT #1'
17WP	00NR	2	'FROM->TO'	G11_051	'CIMARRON - DRAPER LAKE 345KV CKT 1'	717	0.131	100.93	'GEN338388 1-1PLUMPT 23.000'
13WP	00NR	2	'FROM->TO'	G11_051	'CIMARRON - DRAPER LAKE 345KV CKT 1'	717	0.130	108.77	'CANADIAN RIVER - MUSKOGEE 345KV CKT 1'
12WP	00NR	2	'FROM->TO'	G11_051	'CIMARRON - DRAPER LAKE 345KV CKT 1'	717	0.129	100.48	'DRAPER LAKE - SEMINOLE 345KV CKT 2'
12WP	00NR	2	'FROM->TO'	G11_051	'CIMARRON - DRAPER LAKE 345KV CKT 1'	717	0.129	100.36	'DRAPER LAKE - SEMINOLE 345KV CKT 1'
17WP	00NR	2	'FROM->TO'	G11_051	'CIMARRON - DRAPER LAKE 345KV CKT 1'	717	0.128	100.30	'MCCLAIN - PLEASANT VALLEY 138KV CKT 1'
13WP	00NR	2	'FROM->TO'	G11_051	'CIMARRON - DRAPER LAKE 345KV CKT 1'	717	0.128	105.23	'DRAPER LAKE - SEMINOLE 345KV CKT 3'
13WP	00NR	2	'FROM->TO'	G11_051	'CIMARRON - DRAPER LAKE 345KV CKT 1'	717	0.127	104.10	'CIMARRON - MATTHEWSON 345.00 345KV CKT 2'
13WP	00NR	2	'FROM->TO'	G11_051	'CIMARRON - DRAPER LAKE 345KV CKT 1'	717	0.126	103.50	'CIMARRON - MATTHEWSON 345.00 345KV CKT 1'
13WP	00NR	2	'FROM->TO'	G11_051	'CIMARRON - DRAPER LAKE 345KV CKT 1'	717	0.123	103.77	'DRAPER LAKE - SEMINOLE 345KV CKT 2'
13WP	00NR	2	'FROM->TO'	G11_051	'CIMARRON - DRAPER LAKE 345KV CKT 1'	717	0.123	103.65	'DRAPER LAKE - SEMINOLE 345KV CKT 1'
13WP	00NR	2	'FROM->TO'	G11_051	'CIMARRON - DRAPER LAKE 345KV CKT 1'	717	0.123	103.41	'MUSKOGEE - SEMINOLE 345KV CKT 1'
13WP	00NR	2	'FROM->TO'	G11_051	'CIMARRON - DRAPER LAKE 345KV CKT 1'	717	0.121	101.51	'MATTHEWSON 345.00 - TATONGA7 345.00 345KV CKT 1'
13WP	00NR	2	'FROM->TO'	G11_051	'CIMARRON - DRAPER LAKE 345KV CKT 1'	717	0.121	101.51	'MATTHEWSON 345.00 - TATONGA7 345.00 345KV CKT 2'
13WP	00NR	2	'FROM->TO'	G11_051	'CIMARRON - DRAPER LAKE 345KV CKT 1'	717	0.114	103.38	'G11_051T 345.00 - TATONGA7 345.00 345KV CKT 1'
12G	01NR	2	'FROM->TO'	G11_051	'CLEO CORNER - MEN TAP 138KV CKT 1'	191	0.059	109.72	'DBL-MATT-TAT'
13WP	00NR	2	'FROM->TO'	G11_051	'CLEO CORNER - MEN TAP 138KV CKT 1'	191	0.059	133.33	'DBL-MATT-TAT'
17WP	00NR	2	'FROM->TO'	G11_051	'CLEO CORNER - MEN TAP 138KV CKT 1'	191	0.059	125.26	'DBL-MATT-TAT'
12SP	00NR	2	'FROM->TO'	G11_051	'CLEO CORNER - MEN TAP 138KV CKT 1'	191	0.058	109.67	'DBL-MATT-TAT'
13SP	00NR	2	'FROM->TO'	G11_051	'CLEO CORNER - MEN TAP 138KV CKT 1'	191	0.058	108.57	'DBL-MATT-TAT'
12SP	00NR	2	'TO->FROM'	G11_051	'ROMAN NOSE - SOUTHARD 138KV CKT 1'	153	0.058	127.01	'DBL-MATT-TAT'
12SP	00NR	2	'TO->FROM'	G11_051	'EL RENO - ROMAN NOSE 138KV CKT 1'	153	0.058	123.14	'DBL-MATT-TAT'
13SP	00NR	2	'TO->FROM'	G11_051	'ROMAN NOSE - SOUTHARD 138KV CKT 1'	153	0.057	124.07	'DBL-MATT-TAT'
13SP	00NR	2	'TO->FROM'	G11_051	'EL RENO - ROMAN NOSE 138KV CKT 1'	153	0.057	120.49	'DBL-MATT-TAT'
12G	01NR	2	'TO->FROM'	G11_051	'EL RENO - ROMAN NOSE 138KV CKT 1'	153	0.055	190.83	'DBL-MATT-TAT'
12G	01NR	2	'TO->FROM'	G11_051	'ROMAN NOSE - SOUTHARD 138KV CKT 1'	153	0.055	112.62	'DBL-MATT-TAT'
13WP	00NR	2	'TO->FROM'	G11_051	'ROMAN NOSE - SOUTHARD 138KV CKT 1'	185	0.055	128.82	'DBL-MATT-TAT'
13WP	00NR	2	'TO->FROM'	G11_051	'EL RENO - ROMAN NOSE 138KV CKT 1'	185	0.055	122.76	'DBL-MATT-TAT'
17WP	00NR	2	'TO->FROM'	G11_051	'ROMAN NOSE - SOUTHARD 138KV CKT 1'	185	0.055	119.28	'DBL-MATT-TAT'
17WP	00NR	2	'TO->FROM'	G11_051	'EL RENO - ROMAN NOSE 138KV CKT 1'	185	0.055	113.50	'DBL-MATT-TAT'
12G	01NR	2	'TO->FROM'	G11_051	'GLASS MOUNTAIN - MOORELAND 138KV CKT 1'	152	0.051	136.67	'DBL-MATT-TAT'
12G	01NR	2	'TO->FROM'	G11_051	'CLEO CORNER - GLASS MOUNTAIN 138KV CKT 1'	153	0.051	132.45	'DBL-MATT-TAT'
17WP	00NR	2	'TO->FROM'	G11_051	'GLASS MOUNTAIN - MOORELAND 138KV CKT 1'	152	0.051	156.40	'DBL-MATT-TAT'
17WP	00NR	2	'TO->FROM'	G11_051	'CLEO CORNER - GLASS MOUNTAIN 138KV CKT 1'	185	0.051	125.78	'DBL-MATT-TAT'
12SP	00NR	2	'TO->FROM'	G11_051	'GLASS MOUNTAIN - MOORELAND 138KV CKT 1'	152	0.051	142.73	'DBL-MATT-TAT'
12SP	00NR	2	'TO->FROM'	G11_051	'CLEO CORNER - GLASS MOUNTAIN 138KV CKT 1'	153	0.051	137.01	'DBL-MATT-TAT'
13WP	00NR	2	'TO->FROM'	G11_051	'GLASS MOUNTAIN - MOORELAND 138KV CKT 1'	152	0.051	164.77	'DBL-MATT-TAT'
13WP	00NR	2	'TO->FROM'	G11_051	'CLEO CORNER - GLASS MOUNTAIN 138KV CKT 1'	185	0.051	132.65	'DBL-MATT-TAT'
13SP	00NR	2	'TO->FROM'	G11_051	'GLASS MOUNTAIN - MOORELAND 138KV CKT 1'	152	0.051	141.58	'DBL-MATT-TAT'
13SP	00NR	2	'TO->FROM'	G11_051	'CLEO CORNER - GLASS MOUNTAIN 138KV CKT 1'	153	0.051	135.83	'DBL-MATT-TAT'
12SP	00NR	2	'FROM->TO'	G11_051	'NORTHWEST (NORTWST2) 345/138/13.8KV TRANSFORMER CKT 1'	493	0.050	118.61	'NORTHWEST (NORTWST3) 345/138/13.8KV TRANSFORMER CKT 1'
12SP	00NR	2	'FROM->TO'	G11_051	'NORTHWEST (NORTWST2) 345/138/13.8KV TRANSFORMER CKT 1'	493	0.050	116.26	'NORTHWEST (NORTWST3) 345/138/13.8KV TRANSFORMER CKT 1'
13SP	00NR	2	'FROM->TO'	G11_051	'NORTHWEST (NORTWST2) 345/138/13.8KV TRANSFORMER CKT 1'	493	0.050	115.78	'NORTHWEST (NORTWST3) 345/138/13.8KV TRANSFORMER CKT 1'
13SP	00NR	2	'FROM->TO'	G11_051	'NORTHWEST (NORTWST2) 345/138/13.8KV TRANSFORMER CKT 1'	493	0.050	113.29	'NORTHWEST (NORTWST3) 345/138/13.8KV TRANSFORMER CKT 1'
17WP	00NR	2	'TO->FROM'	G11_051	'DOVER SW - OKEENE 138KV CKT 1'	143	0.050	144.11	'DBL-MATT-TAT'
12SP	00NR	2	'FROM->TO'	G11_051	'NORTHWEST (NORTWST3) 345/138/13.8KV TRANSFORMER CKT 1'	493	0.049	108.66	'NORTHWEST (NORTWST2) 345/138/13.8KV TRANSFORMER CKT 1'
12SP	00NR	2	'FROM->TO'	G11_051	'NORTHWEST (NORTWST3) 345/138/13.8KV TRANSFORMER CKT 1'	493	0.049	106.49	'NORTHWEST (NORTWST2) 345/138/13.8KV TRANSFORMER CKT 1'
12G	01NR	2	'TO->FROM'	G11_051	'FPL SWITCH - WOODWARD 138KV CKT 1'	153	0.049	108.62	'DBL-MATT-TAT'
13SP	00NR	2	'FROM->TO'	G11_051	'NORTHWEST (NORTWST3) 345/138/13.8KV TRANSFORMER CKT 1'	493	0.049	105.98	'NORTHWEST (NORTWST2) 345/138/13.8KV TRANSFORMER CKT 1'
13SP	00NR	2	'FROM->TO'	G11_051	'NORTHWEST (NORTWST3) 345/138/13.8KV TRANSFORMER CKT 1'	493	0.049	103.69	'NORTHWEST (NORTWST2) 345/138/13.8KV TRANSFORMER CKT 1'
17WP	00NR	2	'TO->FROM'	G11_051	'CEDARDALE - MOORELAND 138KV CKT 1'	214	0.047	104.98	'DBL-MATT-TAT'
17WP	00NR	2	'FROM->TO'	G11_051	'CEDARDALE - OKEENE 138KV CKT 1'	214	0.047	103.80	'DBL-MATT-TAT'
12G	01NR	2	'TO->FROM'	G11_051	'DOVER SW - OKEENE 138KV CKT 1'	130	0.043	124.61	'DBL-MATT-TAT'
12SP	00NR	2	'TO->FROM'	G11_051	'CEDARDALE - MOORELAND 138KV CKT 1'	179	0.043	108.17	'DBL-MATT-TAT'
12SP	00NR	2	'FROM->TO'	G11_051	'CEDARDALE - OKEENE 138KV CKT 1'	179	0.043	106.57	'DBL-MATT-TAT'
13WP	00NR	2	'TO->FROM'	G11_051	'DOVER SW - OKEENE 138KV CKT 1'	143	0.043	139.58	'DBL-MATT-TAT'
12SP	00NR	2	'TO->FROM'	G11_051	'DOVER SW - OKEENE 138KV CKT 1'	130	0.043	123.04	'DBL-MATT-TAT'
13SP	00NR	2	'TO->FROM'	G11_051	'DOVER SW - OKEENE 138KV CKT 1'	130	0.043	123.36	'DBL-MATT-TAT'

SEASON	GROUP	SCENARIO	DIRECTION	SOURCE	MONITORED ELEMENT	RATE B (MVA)	TDF	(%MVA) LOADING	CONTINGENCY
12G	01NR	2	'TO->FROM'	G11_051	'CEDARDALE - MOORELAND 138KV CKT 1'	179	0.043	101.17	'DBL-MATT-TAT'
13SP	00NR	2	'TO->FROM'	G11_051	'CEDARDALE - MOORELAND 138KV CKT 1'	179	0.043	106.10	'DBL-MATT-TAT'
13SP	00NR	2	'FROM->TO'	G11_051	'CEDARDALE - OKEENE 138KV CKT 1'	179	0.043	104.51	'DBL-MATT-TAT'
13WP	00NR	2	'TO->FROM'	G11_051	'CEDARDALE - MOORELAND 138KV CKT 1'	214	0.042	104.33	'DBL-MATT-TAT'
13WP	00NR	2	'FROM->TO'	G11_051	'CEDARDALE - OKEENE 138KV CKT 1'	214	0.042	103.23	'DBL-MATT-TAT'
12SP	00NR	2	'FROM->TO'	G11_051	'MOORELAND - NINE MILE 138KV CKT 1'	179	0.042	102.06	'DBL-MATT-TAT'
12SP	00NR	2	'TO->FROM'	G11_051	'MOREWOOD SW - NINE MILE 138KV CKT 1'	179	0.042	101.82	'DBL-MATT-TAT'
13SP	00NR	2	'FROM->TO'	G11_051	'MOORELAND - NINE MILE 138KV CKT 1'	179	0.041	101.54	'DBL-MATT-TAT'
13SP	00NR	2	'TO->FROM'	G11_051	'MOREWOOD SW - NINE MILE 138KV CKT 1'	179	0.041	101.29	'DBL-MATT-TAT'
13WP	00NR	2	'TO->FROM'	G11_051	'CLINTON JUNCTION - ELK CITY 138KV CKT 1'	210	0.037	113.89	'DBL-MATT-TAT'
17WP	00NR	2	'TO->FROM'	G11_051	'CLINTON JUNCTION - ELK CITY 138KV CKT 1'	210	0.037	106.03	'DBL-MATT-TAT'
12WP	00NR	2	'FROM->TO'	G11_051	'CIMARRON - CZECH HALL 138KV CKT 1'	382	0.036	101.17	'CIMARRON - DRAPER LAKE 345KV CKT 1'
13WP	00NR	2	'FROM->TO'	G11_051	'NORTHWEST (NORTWST2) 345/138/13.8KV TRANSFORMER CKT 1'	493	0.033	104.34	'NORTHWEST (NORTWST3) 345/138/13.8KV TRANSFORMER CKT 1'
12G	01NR	2	'TO->FROM'	G11_051	'EL RENO - ROMAN NOSE 138KV CKT 1'	153	0.033	132.77	'G11_051T 345.00 - TATONGA7 345.00 345KV CKT 1'
12WP	00NR	2	'TO->FROM'	G11_051	'GLASS MOUNTAIN - MOORELAND 138KV CKT 1'	152	0.032	108.64	'G11_051T 345.00 - TATONGA7 345.00 345KV CKT 1'
17WP	00NR	2	'TO->FROM'	G11_051	'GLASS MOUNTAIN - MOORELAND 138KV CKT 1'	152	0.032	104.05	'G11_051T 345.00 - TATONGA7 345.00 345KV CKT 1'
13WP	00NR	2	'TO->FROM'	G11_051	'GLASS MOUNTAIN - MOORELAND 138KV CKT 1'	152	0.032	107.85	'G11_051T 345.00 - TATONGA7 345.00 345KV CKT 1'
17WP	00NR	2	'FROM->TO'	G11_051	'ELK CITY 230KV (ELKCTY-6) 230/138/13.8KV TRANSFORMER CKT 1'	287	0.032	110.18	'DBL-MATT-TAT'
17WP	00NR	2	'FROM->TO'	G11_051	'ELK CITY 230KV (ELKCTY-6) 230/138/13.8KV TRANSFORMER CKT 1'	287	0.032	109.75	'DBL-MATT-TAT'
13WP	00NR	2	'FROM->TO'	G11_051	'ELK CITY 230KV (ELKCTY-6) 230/138/13.8KV TRANSFORMER CKT 1'	287	0.032	122.56	'DBL-MATT-TAT'
13WP	00NR	2	'FROM->TO'	G11_051	'ELK CITY 230KV (ELKCTY-6) 230/138/13.8KV TRANSFORMER CKT 1'	287	0.032	121.56	'DBL-MATT-TAT'
13WP	00NR	2	'FROM->TO'	G11_051	'GRAPEVINE INTERCHANGE - STATELINE INTERCHANGE 230KV CKT 1'	361	0.032	108.67	'DBL-MATT-TAT'
13WP	00NR	2	'FROM->TO'	G11_051	'CIMARRON - CZECH HALL 138KV CKT 1'	382	0.031	100.06	'CIMARRON - HAYMAKER 138KV CKT 1'
13WP	00NR	2	'TO->FROM'	G11_051	'CLINTON AIR FORCE BASE TAP - ELK CITY 138KV CKT 1'	192	0.030	101.14	'DBL-MATT-TAT'
13WP	00NR	2	'FROM->TO'	G11_051	'CLINTON AIR FORCE BASE TAP - HOBART JUNCTION 138KV CKT 1'	189	0.030	101.02	'DBL-MATT-TAT'
12WP	00NR	2	'FROM->TO'	G11_051	'CIMARRON - CZECH HALL 138KV CKT 1'	382	0.030	102.13	'CIMARRON - HAYMAKER 138KV CKT 1'
12WP	00NR	2	'FROM->TO'	G11_051	'CIMARRON - CZECH HALL 138KV CKT 1'	382	0.030	100.68	'DIVISION AVE - HAYMAKER 138KV CKT 1'
12SP	00NR	3	'FROM->TO'	G11_051	'MATTHEWSON 345.00 - NORTHWEST 345KV CKT 1'	1195	0.468	122.03	'DBL-MATT-CIM'
13SP	00NR	3	'FROM->TO'	G11_051	'MATTHEWSON 345.00 - NORTHWEST 345KV CKT 1'	1195	0.466	121.59	'DBL-MATT-CIM'
17WP	00NR	3	'FROM->TO'	G11_051	'MATTHEWSON 345.00 - NORTHWEST 345KV CKT 1'	1195	0.442	140.04	'DBL-MATT-CIM'
13WP	00NR	3	'FROM->TO'	G11_051	'MATTHEWSON 345.00 - NORTHWEST 345KV CKT 1'	1195	0.442	148.76	'DBL-MATT-CIM'
12WP	00NR	3	'FROM->TO'	G11_051	'MATTHEWSON 345.00 - NORTHWEST 345KV CKT 1'	1195	0.305	101.42	'CIMARRON - MATTHEWSON 345.00 345KV CKT 1'
13WP	00NR	3	'FROM->TO'	G11_051	'MATTHEWSON 345.00 - NORTHWEST 345KV CKT 1'	1195	0.304	101.59	'CIMARRON - MATTHEWSON 345.00 345KV CKT 1'
13WP	00NR	3	'FROM->TO'	G11_051	'CLEO CORNER - MEN TAP 138KV CKT 1'	191	0.059	133.43	'DBL-MATT-TAT'
17WP	00NR	3	'FROM->TO'	G11_051	'CLEO CORNER - MEN TAP 138KV CKT 1'	191	0.059	125.19	'DBL-MATT-TAT'
12SP	00NR	3	'FROM->TO'	G11_051	'CLEO CORNER - MEN TAP 138KV CKT 1'	191	0.059	109.71	'DBL-MATT-TAT'
13SP	00NR	3	'FROM->TO'	G11_051	'CLEO CORNER - MEN TAP 138KV CKT 1'	191	0.058	108.63	'DBL-MATT-TAT'
12SP	00NR	3	'TO->FROM'	G11_051	'ROMAN NOSE - SOUTHARD 138KV CKT 1'	153	0.056	124.47	'DBL-MATT-TAT'
13SP	00NR	3	'TO->FROM'	G11_051	'ROMAN NOSE - SOUTHARD 138KV CKT 1'	153	0.056	121.59	'DBL-MATT-TAT'
13WP	00NR	3	'TO->FROM'	G11_051	'ROMAN NOSE - SOUTHARD 138KV CKT 1'	185	0.054	125.68	'DBL-MATT-TAT'
17WP	00NR	3	'TO->FROM'	G11_051	'ROMAN NOSE - SOUTHARD 138KV CKT 1'	185	0.053	116.51	'DBL-MATT-TAT'
17WP	00NR	3	'TO->FROM'	G11_051	'GLASS MOUNTAIN - MOORELAND 138KV CKT 1'	152	0.051	156.32	'DBL-MATT-TAT'
17WP	00NR	3	'TO->FROM'	G11_051	'CLEO CORNER - GLASS MOUNTAIN 138KV CKT 1'	185	0.051	125.71	'DBL-MATT-TAT'
12SP	00NR	3	'TO->FROM'	G11_051	'GLASS MOUNTAIN - MOORELAND 138KV CKT 1'	152	0.051	142.77	'DBL-MATT-TAT'
12SP	00NR	3	'TO->FROM'	G11_051	'CLEO CORNER - GLASS MOUNTAIN 138KV CKT 1'	153	0.051	137.05	'DBL-MATT-TAT'
13WP	00NR	3	'TO->FROM'	G11_051	'GLASS MOUNTAIN - MOORELAND 138KV CKT 1'	152	0.051	164.87	'DBL-MATT-TAT'
13WP	00NR	3	'TO->FROM'	G11_051	'CLEO CORNER - GLASS MOUNTAIN 138KV CKT 1'	185	0.051	132.75	'DBL-MATT-TAT'
13SP	00NR	3	'TO->FROM'	G11_051	'GLASS MOUNTAIN - MOORELAND 138KV CKT 1'	152	0.051	141.63	'DBL-MATT-TAT'
13SP	00NR	3	'TO->FROM'	G11_051	'CLEO CORNER - GLASS MOUNTAIN 138KV CKT 1'	153	0.051	135.87	'DBL-MATT-TAT'
17WP	00NR	3	'TO->FROM'	G11_051	'DOVER SW - OKEENE 138KV CKT 1'	143	0.050	144.13	'DBL-MATT-TAT'
17WP	00NR	3	'TO->FROM'	G11_051	'CEDARDALE - MOORELAND 138KV CKT 1'	214	0.047	104.90	'DBL-MATT-TAT'
17WP	00NR	3	'FROM->TO'	G11_051	'CEDARDALE - OKEENE 138KV CKT 1'	214	0.047	103.72	'DBL-MATT-TAT'
13WP	00NR	3	'TO->FROM'	G11_051	'DOVER SW - OKEENE 138KV CKT 1'	143	0.043	139.73	'DBL-MATT-TAT'
12SP	00NR	3	'TO->FROM'	G11_051	'CEDARDALE - MOORELAND 138KV CKT 1'	179	0.043	108.09	'DBL-MATT-TAT'
12SP	00NR	3	'FROM->TO'	G11_051	'CEDARDALE - OKEENE 138KV CKT 1'	179	0.043	106.50	'DBL-MATT-TAT'
12SP	00NR	3	'TO->FROM'	G11_051	'DOVER SW - OKEENE 138KV CKT 1'	130	0.043	123.10	'DBL-MATT-TAT'
13SP	00NR	3	'TO->FROM'	G11_051	'DOVER SW - OKEENE 138KV CKT 1'	130	0.043	123.43	'DBL-MATT-TAT'
13SP	00NR	3	'TO->FROM'	G11_051	'CEDARDALE - MOORELAND 138KV CKT 1'	179	0.043	106.03	'DBL-MATT-TAT'
13SP	00NR	3	'FROM->TO'	G11_051	'CEDARDALE - OKEENE 138KV CKT 1'	179	0.043	104.44	'DBL-MATT-TAT'
13WP	00NR	3	'TO->FROM'	G11_051	'CEDARDALE - MOORELAND 138KV CKT 1'	214	0.042	104.28	'DBL-MATT-TAT'
13WP	00NR	3	'FROM->TO'	G11_051	'CEDARDALE - OKEENE 138KV CKT 1'	214	0.042	103.19	'DBL-MATT-TAT'
12SP	00NR	3	'FROM->TO'	G11_051	'MOORELAND - NINE MILE 138KV CKT 1'	179	0.042	102.04	'DBL-MATT-TAT'
12SP	00NR	3	'TO->FROM'	G11_051	'MOREWOOD SW - NINE MILE 138KV CKT 1'	179	0.042	101.79	'DBL-MATT-TAT'
13SP	00NR	3	'FROM->TO'	G11_051	'MOORELAND - NINE MILE 138KV CKT 1'	179	0.041	101.50	'DBL-MATT-TAT'
13SP	00NR	3	'TO->FROM'	G11_051	'MOREWOOD SW - NINE MILE 138KV CKT 1'	179	0.041	101.25	'DBL-MATT-TAT'
13WP	00NR	3	'TO->FROM'	G11_051	'CLINTON JUNCTION - ELK CITY 138KV CKT 1'	210	0.037	113.83	'DBL-MATT-TAT'
17WP	00NR	3	'TO->FROM'	G11_051	'CLINTON JUNCTION - ELK CITY 138KV CKT 1'	210	0.037	105.78	'DBL-MATT-TAT'
12WP	00NR	3	'TO->FROM'	G11_051	'GLASS MOUNTAIN - MOORELAND 138KV CKT 1'	152	0.032	108.60	'G11_051T 345.00 - TATONGA7 345.00 345KV CKT 1'
17WP	00NR	3	'TO->FROM'	G11_051	'GLASS MOUNTAIN - MOORELAND 138KV CKT 1'	152	0.032	104.03	'G11_051T 345.00 - TATONGA7 345.00 345KV CKT 1'
13WP	00NR	3	'TO->FROM'	G11_051	'GLASS MOUNTAIN - MOORELAND 138KV CKT 1'	152	0.032	107.76	'G11_051T 345.00 - TATONGA7 345.00 345KV CKT 1'
13WP	00NR	3	'FROM->TO'	G11_051	'GRAPEVINE INTERCHANGE - STATELINE INTERCHANGE 230KV CKT 1'	361	0.032	107.84	'DBL-MATT-TAT'
13WP	00NR	3	'TO->FROM'	G11_051	'CLINTON AIR FORCE BASE TAP - ELK CITY 138KV CKT 1'	192	0.030	101.33	'DBL-MATT-TAT'
13WP	00NR	3	'FROM->TO'	G11_051	'CLINTON AIR FORCE BASE TAP - HOBART JUNCTION 138KV CKT 1'	189	0.030	101.22	'DBL-MATT-TAT'
12WP	00NR	0	'FROM->TO'	G11_054	'CIMARRON - DRAPER LAKE 345KV CKT 1'	717	0.280	112.50	'ARCADIA - NORTHWEST 345KV CKT 1'
13WP	00NR	0	'FROM->TO'	G11_054	'CIMARRON - DRAPER LAKE 345KV CKT 1'	717	0.269	117.35	'ARCADIA - NORTHWEST 345KV CKT 1'
17WP	00NR	0	'FROM->TO'	G11_054	'CIMARRON - DRAPER LAKE 345KV CKT 1'	717	0.263	104.47	'ARCADIA - NORTHWEST 345KV CKT 1'
12WP	00NR	0	'FROM->TO'	G11_054	'CIMARRON - DRAPER LAKE 345KV CKT 1'	717	0.249	100.18	'CIMARRON - NORTHWEST 345KV CKT 1'
13WP	00NR	0	'FROM->TO'	G11_054	'CIMARRON - DRAPER LAKE 345KV CKT 1'	717	0.241	104.53	'CIMARRON - NORTHWEST 345KV CKT 1'

SEASON	GROUP	SCENARIO	DIRECTION	SOURCE	MONITORED ELEMENT	RATE B (MVA)	TDF	(%MVA) LOADING	CONTINGENCY
12WP	00NR	0	'FROM->TO'	G11_054	'CIMARRON - DRAPER LAKE 345KV CKT 1'	717	0.233	117.18	'LAWTON EASTSIDE - SUNNYSIDE 345KV CKT 1'
13WP	00NR	0	'FROM->TO'	G11_054	'CIMARRON - DRAPER LAKE 345KV CKT 1'	717	0.231	103.82	'GRACEMONT - MINCO 345KV CKT 1'
13WP	00NR	0	'FROM->TO'	G11_054	'CIMARRON - DRAPER LAKE 345KV CKT 1'	717	0.231	103.28	'CIMARRON - MINCO 345KV CKT 1'
12WP	00NR	0	'FROM->TO'	G11_054	'CIMARRON - DRAPER LAKE 345KV CKT 1'	717	0.228	106.21	'MATTHEWSON 345.00 - NORTHWEST 345KV CKT 1'
12WP	00NR	0	'FROM->TO'	G11_054	'CIMARRON - DRAPER LAKE 345KV CKT 1'	717	0.227	103.74	'CIMARRON (CIMARON1) 345/138/13.8KV TRANSFORMER CKT 1'
12WP	00NR	0	'FROM->TO'	G11_054	'CIMARRON - DRAPER LAKE 345KV CKT 1'	717	0.227	103.53	'CIMARRON (CIMARON2) 345/138/13.8KV TRANSFORMER CKT 1'
12WP	00NR	0	'FROM->TO'	G11_054	'CIMARRON - DRAPER LAKE 345KV CKT 1'	717	0.226	108.82	'ARCADIA - HORSESHOE LAKE 345KV CKT 1'
12WP	00NR	0	'FROM->TO'	G11_054	'CIMARRON - DRAPER LAKE 345KV CKT 1'	717	0.226	108.82	'HORSESHOE LAKE - SEMINOLE 345KV CKT 1'
12WP	00NR	0	'FROM->TO'	G11_054	'CIMARRON - DRAPER LAKE 345KV CKT 1'	717	0.225	104.13	'CIMARRON - SARA 138KV CKT 1'
12WP	00NR	0	'FROM->TO'	G11_054	'CIMARRON - DRAPER LAKE 345KV CKT 1'	717	0.225	102.88	'MCCLAIN - SARA 138KV CKT 1'
13WP	00NR	0	'FROM->TO'	G11_054	'CIMARRON - DRAPER LAKE 345KV CKT 1'	717	0.224	121.69	'LAWTON EASTSIDE - SUNNYSIDE 345KV CKT 1'
12WP	00NR	0	'FROM->TO'	G11_054	'CIMARRON - DRAPER LAKE 345KV CKT 1'	717	0.224	109.18	'CLEVELAND - SOONER 345KV CKT 1'
12WP	00NR	0	'FROM->TO'	G11_054	'CIMARRON - DRAPER LAKE 345KV CKT 1'	717	0.223	102.84	'CIMARRON - CZECH HALL 138KV CKT 1'
12WP	00NR	0	'FROM->TO'	G11_054	'CIMARRON - DRAPER LAKE 345KV CKT 1'	717	0.223	102.39	'CZECH HALL - XEROX 138KV CKT 1'
12WP	00NR	0	'FROM->TO'	G11_054	'CIMARRON - DRAPER LAKE 345KV CKT 1'	717	0.223	102.37	'MORGAN - XEROX 138KV CKT 1'
12WP	00NR	0	'FROM->TO'	G11_054	'CIMARRON - DRAPER LAKE 345KV CKT 1'	717	0.223	102.26	'MORGAN - MUSTANG 138KV CKT 1'
12WP	00NR	0	'FROM->TO'	G11_054	'CIMARRON - DRAPER LAKE 345KV CKT 1'	717	0.222	104.28	'CLEVELAND - TULSA NORTH 345KV CKT 1'
12WP	00NR	0	'FROM->TO'	G11_054	'CIMARRON - DRAPER LAKE 345KV CKT 1'	717	0.222	100.00	'JOHNSON COUNTY - SUNNYSIDE 345KV CKT 1'
12WP	00NR	0	'FROM->TO'	G11_054	'CIMARRON - DRAPER LAKE 345KV CKT 1'	717	0.222	100.63	'REDBUD - RIVERSIDE STATION 345KV CKT 1'
17WP	00NR	0	'FROM->TO'	G11_054	'CIMARRON - DRAPER LAKE 345KV CKT 1'	717	0.221	109.96	'LAWTON EASTSIDE - SUNNYSIDE 345KV CKT 1'
12WP	00NR	0	'FROM->TO'	G11_054	'CIMARRON - DRAPER LAKE 345KV CKT 1'	717	0.221	101.59	'NORTHWEST (NORTWST2) 345/138/13.8KV TRANSFORMER CKT 1'
12WP	00NR	0	'FROM->TO'	G11_054	'CIMARRON - DRAPER LAKE 345KV CKT 1'	717	0.220	100.80	'NORTHWEST (NORTWST3) 345/138/13.8KV TRANSFORMER CKT 1'
12WP	00NR	0	'FROM->TO'	G11_054	'CIMARRON - DRAPER LAKE 345KV CKT 1'	717	0.220	100.96	'CANEYRV7 345.00 - NEOSHO 345KV CKT 1'
12WP	00NR	0	'FROM->TO'	G11_054	'CIMARRON - DRAPER LAKE 345KV CKT 1'	717	0.220	100.82	'CANEYRV7 345.00 - LATHAMS7 345.00 345KV CKT 1'
12WP	00NR	0	'FROM->TO'	G11_054	'CIMARRON - DRAPER LAKE 345KV CKT 1'	717	0.220	100.35	'LATHAMS7 345.00 - ROSE HILL 345KV CKT 1'
13WP	00NR	0	'FROM->TO'	G11_054	'CIMARRON - DRAPER LAKE 345KV CKT 1'	717	0.220	107.59	'CIMARRON (CIMARON1) 345/138/13.8KV TRANSFORMER CKT 1'
12WP	00NR	0	'FROM->TO'	G11_054	'CIMARRON - DRAPER LAKE 345KV CKT 1'	717	0.220	100.97	'ANADARKO - POCASSETT 138KV CKT 1'
12WP	00NR	0	'FROM->TO'	G11_054	'CIMARRON - DRAPER LAKE 345KV CKT 1'	717	0.220	100.79	'POCASSETT - TUTTLE 138KV CKT 1'
12WP	00NR	0	'FROM->TO'	G11_054	'CIMARRON - DRAPER LAKE 345KV CKT 1'	717	0.220	100.35	'SUNSHINE CANYON - TUTTLE 138KV CKT 1'
12WP	00NR	0	'FROM->TO'	G11_054	'CIMARRON - DRAPER LAKE 345KV CKT 1'	717	0.220	102.04	'DBL-WICH-THI'
13WP	00NR	0	'FROM->TO'	G11_054	'CIMARRON - DRAPER LAKE 345KV CKT 1'	717	0.220	107.39	'CIMARRON (CIMARON2) 345/138/13.8KV TRANSFORMER CKT 1'
13WP	00NR	0	'FROM->TO'	G11_054	'CIMARRON - DRAPER LAKE 345KV CKT 1'	717	0.220	107.46	'CIMARRON - SARA 138KV CKT 1'
13WP	00NR	0	'FROM->TO'	G11_054	'CIMARRON - DRAPER LAKE 345KV CKT 1'	717	0.220	106.37	'MCCLAIN - SARA 138KV CKT 1'
13WP	00NR	0	'FROM->TO'	G11_054	'CIMARRON - DRAPER LAKE 345KV CKT 1'	717	0.220	110.42	'MATTHEWSON 345.00 - NORTHWEST 345KV CKT 1'
12WP	00NR	0	'FROM->TO'	G11_054	'CIMARRON - DRAPER LAKE 345KV CKT 1'	717	0.219	101.12	'ANDERSONCO 345.00 - LACYGNE 345KV CKT 1'
12WP	00NR	0	'FROM->TO'	G11_054	'CIMARRON - DRAPER LAKE 345KV CKT 1'	717	0.219	101.01	'ANDERSONCO 345.00 - WOLF CREEK 345KV CKT 1'
12WP	00NR	0	'FROM->TO'	G11_054	'CIMARRON - DRAPER LAKE 345KV CKT 1'	717	0.219	106.80	'GEN336821 1-GRAND GULF UNIT'
12WP	00NR	0	'FROM->TO'	G11_054	'CIMARRON - DRAPER LAKE 345KV CKT 1'	717	0.219	106.35	'GEN336153 1-WATERFORD UNIT#3'
12WP	00NR	0	'FROM->TO'	G11_054	'CIMARRON - DRAPER LAKE 345KV CKT 1'	717	0.219	105.55	'GEN515042 1-SEMINOLE 3G'
12WP	00NR	0	'FROM->TO'	G11_054	'CIMARRON - DRAPER LAKE 345KV CKT 1'	717	0.219	105.38	'GEN337911 1-ARKANSAS NUCLEAR ONE UNIT #2'
12WP	00NR	0	'FROM->TO'	G11_054	'CIMARRON - DRAPER LAKE 345KV CKT 1'	717	0.219	105.22	'GEN335831 1-RIVERBEND UNIT#1'
12WP	00NR	0	'FROM->TO'	G11_054	'CIMARRON - DRAPER LAKE 345KV CKT 1'	717	0.219	104.59	'GEN515041 1-SEMINOLE 2G'
12WP	00NR	0	'FROM->TO'	G11_054	'CIMARRON - DRAPER LAKE 345KV CKT 1'	717	0.219	104.30	'GEN501801 1-DOLET HILLS UNIT1'
12WP	00NR	0	'FROM->TO'	G11_054	'CIMARRON - DRAPER LAKE 345KV CKT 1'	717	0.219	104.15	'GEN337910 1-ARKANSAS NUCLEAR ONE UNIT #1'
12WP	00NR	0	'FROM->TO'	G11_054	'CIMARRON - DRAPER LAKE 345KV CKT 1'	717	0.219	103.74	'GEN520947 1-HUGO1'
12WP	00NR	0	'FROM->TO'	G11_054	'CIMARRON - DRAPER LAKE 345KV CKT 1'	717	0.219	103.26	'GEN337652 1-WHITE BLUFF UNIT #1'
12WP	00NR	0	'FROM->TO'	G11_054	'CIMARRON - DRAPER LAKE 345KV CKT 1'	717	0.219	102.89	'GEN509403 1-PIRKEY GENERATION'
12WP	00NR	0	'FROM->TO'	G11_054	'CIMARRON - DRAPER LAKE 345KV CKT 1'	717	0.219	102.89	'GEN509416 1-TURK GENERATION'
12WP	00NR	0	'FROM->TO'	G11_054	'CIMARRON - DRAPER LAKE 345KV CKT 1'	717	0.219	102.70	'GEN336252 1-NINEMILE POINT UNIT#5'
12WP	00NR	0	'FROM->TO'	G11_054	'CIMARRON - DRAPER LAKE 345KV CKT 1'	717	0.219	102.68	'GEN338146 1-INDEPENDENCE UNIT #2'
12WP	00NR	0	'FROM->TO'	G11_054	'CIMARRON - DRAPER LAKE 345KV CKT 1'	717	0.219	102.67	'GEN515040 1-SEMINOLE 1G'
12WP	00NR	0	'FROM->TO'	G11_054	'CIMARRON - DRAPER LAKE 345KV CKT 1'	717	0.219	102.66	'GEN336251 1-NINEMILE POINT UNIT#4'
12WP	00NR	0	'FROM->TO'	G11_054	'CIMARRON - DRAPER LAKE 345KV CKT 1'	717	0.219	102.60	'GEN501813 1-RODEMACHER UNIT 3'
12WP	00NR	0	'FROM->TO'	G11_054	'CIMARRON - DRAPER LAKE 345KV CKT 1'	717	0.219	102.51	'GEN338143 1-INDEPENDENCE UNIT #1'
12WP	00NR	0	'FROM->TO'	G11_054	'CIMARRON - DRAPER LAKE 345KV CKT 1'	717	0.219	102.49	'GEN337041 1-GERALD ANDRUS'
12WP	00NR	0	'FROM->TO'	G11_054	'CIMARRON - DRAPER LAKE 345KV CKT 1'	717	0.219	102.45	'GEN337653 1-WHITE BLUFF UNIT #2'
12WP	00NR	0	'FROM->TO'	G11_054	'CIMARRON - DRAPER LAKE 345KV CKT 1'	717	0.219	101.98	'GEN501812 1-RODEMACHER UNIT 2'
12WP	00NR	0	'FROM->TO'	G11_054	'CIMARRON - DRAPER LAKE 345KV CKT 1'	717	0.219	101.96	'GEN509406 1-WELSH #3'
12WP	00NR	0	'FROM->TO'	G11_054	'CIMARRON - DRAPER LAKE 345KV CKT 1'	717	0.219	101.96	'GEN509405 1-WELSH #2'
12WP	00NR	0	'FROM->TO'	G11_054	'CIMARRON - DRAPER LAKE 345KV CKT 1'	717	0.219	101.96	'GEN509404 1-WELSH #1'
12WP	00NR	0	'FROM->TO'	G11_054	'CIMARRON - DRAPER LAKE 345KV CKT 1'	717	0.219	101.85	'GEN335206 1-NELSON UNIT 6'
12WP	00NR	0	'FROM->TO'	G11_054	'CIMARRON - DRAPER LAKE 345KV CKT 1'	717	0.219	101.64	'GEN336831 1-BAXTER WILSON SES'
12WP	00NR	0	'FROM->TO'	G11_054	'CIMARRON - DRAPER LAKE 345KV CKT 1'	717	0.219	101.61	'GEN334440 1-SABINE UNIT 4'
12WP	00NR	0	'FROM->TO'	G11_054	'CIMARRON - DRAPER LAKE 345KV CKT 1'	717	0.219	101.61	'GEN515226 1-MUSKOGEE 6G'
12WP	00NR	0	'FROM->TO'	G11_054	'CIMARRON - DRAPER LAKE 345KV CKT 1'	717	0.219	101.42	'GEN338388 1-1PLUMPT 23.000'
12WP	00NR	0	'FROM->TO'	G11_054	'CIMARRON - DRAPER LAKE 345KV CKT 1'	717	0.219	101.22	'GEN515225 1-MUSKOGEE 5G'
12WP	00NR	0	'FROM->TO'	G11_054	'CIMARRON - DRAPER LAKE 345KV CKT 1'	717	0.219	101.22	'GEN515223 1-MUSKOGEE 4G'
12WP	00NR	0	'FROM->TO'	G11_054	'CIMARRON - DRAPER LAKE 345KV CKT 1'	717	0.219	101.19	'GEN335204 1-NELSON UNIT 4'
12WP	00NR	0	'FROM->TO'	G11_054	'CIMARRON - DRAPER LAKE 345KV CKT 1'	717	0.219	101.11	'GEN334433 1-SABINE UNIT 3'
12WP	00NR	0	'FROM->TO'	G11_054	'CIMARRON - DRAPER LAKE 345KV CKT 1'	717	0.219	101.11	'GEN336801 1-BAXTER WILSON UNIT #1'
12WP	00NR	0	'FROM->TO'	G11_054	'CIMARRON - DRAPER LAKE 345KV CKT 1'	717	0.219	101.11	'GEN334441 1-SABINE UNIT 5'
12WP	00NR	0	'FROM->TO'	G11_054	'CIMARRON - DRAPER LAKE 345KV CKT 1'	717	0.219	100.00	'GEN336170 1-GULF OXY U4'
12WP	00NR	0	'FROM->TO'	G11_054	'CIMARRON - DRAPER LAKE 345KV CKT 1'	717	0.219	100.00	'LAWTON EASTSIDE - OKLAUNION 345KV CKT 1'
17WP	00NR	0	'FROM->TO'	G11_054	'CIMARRON - DRAPER LAKE 345KV CKT 1'	717	0.218	101.14	'MATTHEWSON 345.00 - NORTHWEST 345KV CKT 1'
13WP	00NR	0	'FROM->TO'	G11_054	'CIMARRON - DRAPER LAKE 345KV CKT 1'	717	0.217	103.94	'SOONER - WOODRING 345KV CKT 1'
13WP	00NR	0	'FROM->TO'	G11_054	'CIMARRON - DRAPER LAKE 345KV CKT 1'	717	0.216	114.08	'ARCADIA - HORSESHOE LAKE 345KV CKT 1'
13WP	00NR	0	'FROM->TO'	G11_054	'CIMARRON - DRAPER LAKE 345KV CKT 1'	717	0.216	114.05	'HORSESHOE LAKE - SEMINOLE 345KV CKT 1'
13WP	00NR	0	'FROM->TO'	G11_054	'CIMARRON - DRAPER LAKE 345KV CKT 1'	717	0.216	113.22	'CLEVELAND - SOONER 345KV CKT 1'

SEASON	GROUP	SCENARIO	DIRECTION	SOURCE	MONITORED ELEMENT	RATE B (MVA)	TDF	(%MVA) LOADING	CONTINGENCY
13WP	00NR	0	'FROM->TO'	G11_054	'CIMARRON - DRAPER LAKE 345KV CKT 1'	717	0.216	106.85	'CIMARRON - CZECH HALL 138KV CKT 1'
13WP	00NR	0	'FROM->TO'	G11_054	'CIMARRON - DRAPER LAKE 345KV CKT 1'	717	0.216	106.40	'CZECH HALL - XEROX 138KV CKT 1'
13WP	00NR	0	'FROM->TO'	G11_054	'CIMARRON - DRAPER LAKE 345KV CKT 1'	717	0.216	106.38	'MORGAN - XEROX 138KV CKT 1'
13WP	00NR	0	'FROM->TO'	G11_054	'CIMARRON - DRAPER LAKE 345KV CKT 1'	717	0.216	106.33	'MORGAN - MUSTANG 138KV CKT 1'
13WP	00NR	0	'FROM->TO'	G11_054	'CIMARRON - DRAPER LAKE 345KV CKT 1'	717	0.215	101.78	'PECAN CREEK - RIVERSIDE STATION 345KV CKT 1'
13WP	00NR	0	'FROM->TO'	G11_054	'CIMARRON - DRAPER LAKE 345KV CKT 1'	717	0.214	108.44	'CLEVELAND - TULSA NORTH 345KV CKT 1'
17WP	00NR	0	'FROM->TO'	G11_054	'CIMARRON - DRAPER LAKE 345KV CKT 1'	717	0.214	104.31	'ARCADIA - HORSESHOE LAKE 345KV CKT 1'
17WP	00NR	0	'FROM->TO'	G11_054	'CIMARRON - DRAPER LAKE 345KV CKT 1'	717	0.214	104.31	'HORSESHOE LAKE - SEMINOLE 345KV CKT 1'
17WP	00NR	0	'FROM->TO'	G11_054	'CIMARRON - DRAPER LAKE 345KV CKT 1'	717	0.214	103.17	'CLEVELAND - SOONER 345KV CKT 1'
13WP	00NR	0	'FROM->TO'	G11_054	'CIMARRON - DRAPER LAKE 345KV CKT 1'	717	0.214	103.06	'JOHNSON COUNTY - PITTSBURG 345KV CKT 1'
13WP	00NR	0	'FROM->TO'	G11_054	'CIMARRON - DRAPER LAKE 345KV CKT 1'	717	0.214	104.56	'JOHNSON COUNTY - SUNNYSIDE 345KV CKT 1'
13WP	00NR	0	'FROM->TO'	G11_054	'CIMARRON - DRAPER LAKE 345KV CKT 1'	717	0.214	103.39	'OGE3TERM18'
13WP	00NR	0	'FROM->TO'	G11_054	'CIMARRON - DRAPER LAKE 345KV CKT 1'	717	0.214	103.29	'36 & MERIDIAN - PENNSYLVANIA 138KV CKT 1'
13WP	00NR	0	'FROM->TO'	G11_054	'CIMARRON - DRAPER LAKE 345KV CKT 1'	717	0.214	104.83	'REDBUD - RIVERSIDE STATION 345KV CKT 1'
13WP	00NR	0	'FROM->TO'	G11_054	'CIMARRON - DRAPER LAKE 345KV CKT 1'	717	0.214	102.86	'CLARKSVILLE - ONETA 345KV CKT 1'
13WP	00NR	0	'FROM->TO'	G11_054	'CIMARRON - DRAPER LAKE 345KV CKT 1'	717	0.213	103.58	'CIMARRON - HAYMAKER 138KV CKT 1'
13WP	00NR	0	'FROM->TO'	G11_054	'CIMARRON - DRAPER LAKE 345KV CKT 1'	717	0.213	103.44	'DIVISION AVE - HAYMAKER 138KV CKT 1'
13WP	00NR	0	'FROM->TO'	G11_054	'CIMARRON - DRAPER LAKE 345KV CKT 1'	717	0.213	102.98	'GRACEMONT (BANK 1) 345/138/13.8KV TRANSFORMER CKT 1'
13WP	00NR	0	'FROM->TO'	G11_054	'CIMARRON - DRAPER LAKE 345KV CKT 1'	717	0.213	105.74	'DBL-THIS-WWR'
13WP	00NR	0	'FROM->TO'	G11_054	'CIMARRON - DRAPER LAKE 345KV CKT 1'	717	0.213	105.59	'NORTHWEST (NORTWST2) 345/138/13.8KV TRANSFORMER CKT 1'
13WP	00NR	0	'FROM->TO'	G11_054	'CIMARRON - DRAPER LAKE 345KV CKT 1'	717	0.213	103.36	'CLASSEN - ROBINSON 138KV CKT 1'
13WP	00NR	0	'FROM->TO'	G11_054	'CIMARRON - DRAPER LAKE 345KV CKT 1'	717	0.213	102.94	'LIGHTNING CREEK - ROBINSON 138KV CKT 1'
13WP	00NR	0	'FROM->TO'	G11_054	'CIMARRON - DRAPER LAKE 345KV CKT 1'	717	0.213	102.78	'LIGHTNING CREEK - TROSPER 138KV CKT 1'
13WP	00NR	0	'FROM->TO'	G11_054	'CIMARRON - DRAPER LAKE 345KV CKT 1'	717	0.213	103.37	'BLANCHARD - CORNVILLE 138KV CKT 1'
13WP	00NR	0	'FROM->TO'	G11_054	'CIMARRON - DRAPER LAKE 345KV CKT 1'	717	0.213	103.28	'KETCH TAP - NORTHWEST 138KV CKT 1'
13WP	00NR	0	'FROM->TO'	G11_054	'CIMARRON - DRAPER LAKE 345KV CKT 1'	717	0.213	103.17	'BLANCHARD - MAUD 138KV CKT 1'
13WP	00NR	0	'FROM->TO'	G11_054	'CIMARRON - DRAPER LAKE 345KV CKT 1'	717	0.213	104.85	'NORTHWEST (NORTWST3) 345/138/13.8KV TRANSFORMER CKT 1'
13WP	00NR	0	'FROM->TO'	G11_054	'CIMARRON - DRAPER LAKE 345KV CKT 1'	717	0.213	103.30	'OGE3TERM11'
13WP	00NR	0	'FROM->TO'	G11_054	'CIMARRON - DRAPER LAKE 345KV CKT 1'	717	0.213	103.58	'QUAIL CREEK - SKYLINE 138KV CKT 1'
13WP	00NR	0	'FROM->TO'	G11_054	'CIMARRON - DRAPER LAKE 345KV CKT 1'	717	0.212	104.11	'HORSESHOE LAKE - JONES TAP 138KV CKT 1'
13WP	00NR	0	'FROM->TO'	G11_054	'CIMARRON - DRAPER LAKE 345KV CKT 1'	717	0.212	100.16	'G08-13T 345.00 - SUMNERCO 345.00 345KV CKT 1'
13WP	00NR	0	'FROM->TO'	G11_054	'CIMARRON - DRAPER LAKE 345KV CKT 1'	717	0.212	103.55	'SUNSHINE CANYON - WESTMOORE 138KV CKT 1'
13WP	00NR	0	'FROM->TO'	G11_054	'CIMARRON - DRAPER LAKE 345KV CKT 1'	717	0.212	102.92	'FRANKLIN SW - WESTMOORE 138KV CKT 1'
13WP	00NR	0	'FROM->TO'	G11_054	'CIMARRON - DRAPER LAKE 345KV CKT 1'	717	0.212	101.69	'FOREST HILL - SQUIRL CREEK 138KV CKT 1'
13WP	00NR	0	'FROM->TO'	G11_054	'CIMARRON - DRAPER LAKE 345KV CKT 1'	717	0.212	101.36	'FOREST HILL - MAUD 138KV CKT 1'
13WP	00NR	0	'FROM->TO'	G11_054	'CIMARRON - DRAPER LAKE 345KV CKT 1'	717	0.212	103.31	'OGE3TERM20'
13WP	00NR	0	'FROM->TO'	G11_054	'CIMARRON - DRAPER LAKE 345KV CKT 1'	717	0.212	103.87	'NORTHEAST STATION - ONETA 345KV CKT 1'
13WP	00NR	0	'FROM->TO'	G11_054	'CIMARRON - DRAPER LAKE 345KV CKT 1'	717	0.212	102.80	'WOODRING (WOODRNG2) 345/138/13.8KV TRANSFORMER CKT 1'
13WP	00NR	0	'FROM->TO'	G11_054	'CIMARRON - DRAPER LAKE 345KV CKT 1'	717	0.212	105.18	'CANEYRV7 345.00 - NEOSHO 345KV CKT 1'
13WP	00NR	0	'FROM->TO'	G11_054	'CIMARRON - DRAPER LAKE 345KV CKT 1'	717	0.212	105.04	'CANEYRV7 345.00 - LATHAMS7 345.00 345KV CKT 1'
13WP	00NR	0	'FROM->TO'	G11_054	'CIMARRON - DRAPER LAKE 345KV CKT 1'	717	0.212	104.54	'LATHAMS7 345.00 - ROSE HILL 345KV CKT 1'
13WP	00NR	0	'FROM->TO'	G11_054	'CIMARRON - DRAPER LAKE 345KV CKT 1'	717	0.212	103.53	'MEMORIAL - SKYLINE 138KV CKT 1'
13WP	00NR	0	'FROM->TO'	G11_054	'CIMARRON - DRAPER LAKE 345KV CKT 1'	717	0.212	101.73	'MUSKOGEE - PECAN CREEK 345KV CKT 2'
13WP	00NR	0	'FROM->TO'	G11_054	'CIMARRON - DRAPER LAKE 345KV CKT 1'	717	0.212	103.21	'DIVISION AVE - LAKESIDE 138KV CKT 1'
13WP	00NR	0	'FROM->TO'	G11_054	'CIMARRON - DRAPER LAKE 345KV CKT 1'	717	0.212	103.08	'HEFNER - LAKESIDE 138KV CKT 1'
13WP	00NR	0	'FROM->TO'	G11_054	'CIMARRON - DRAPER LAKE 345KV CKT 1'	717	0.212	105.06	'ANADARKO - POCASSETT 138KV CKT 1'
13WP	00NR	0	'FROM->TO'	G11_054	'CIMARRON - DRAPER LAKE 345KV CKT 1'	717	0.212	104.88	'POCASSETT - TUTTLE 138KV CKT 1'
13WP	00NR	0	'FROM->TO'	G11_054	'CIMARRON - DRAPER LAKE 345KV CKT 1'	717	0.212	104.44	'SUNSHINE CANYON - TUTTLE 138KV CKT 1'
13WP	00NR	0	'FROM->TO'	G11_054	'CIMARRON - DRAPER LAKE 345KV CKT 1'	717	0.212	101.73	'ARCADIA - OMPA-EDMOND AIR DEPOT (PLANNED 2007) 138KV CKT 1'
13WP	00NR	0	'FROM->TO'	G11_054	'CIMARRON - DRAPER LAKE 345KV CKT 1'	717	0.212	102.84	'DAYTON - MUSTANG 138KV CKT 1'
13WP	00NR	0	'FROM->TO'	G11_054	'CIMARRON - DRAPER LAKE 345KV CKT 1'	717	0.212	102.83	'DAYTON - HOBBY LOBBY 138KV CKT 1'
13WP	00NR	0	'FROM->TO'	G11_054	'CIMARRON - DRAPER LAKE 345KV CKT 1'	717	0.212	102.78	'36 & MERIDIAN - HOBBY LOBBY 138KV CKT 1'
13WP	00NR	0	'FROM->TO'	G11_054	'CIMARRON - DRAPER LAKE 345KV CKT 1'	717	0.212	100.87	'OAKCREEK - WILD MARY 138KV CKT 1'
13WP	00NR	0	'FROM->TO'	G11_054	'CIMARRON - DRAPER LAKE 345KV CKT 1'	717	0.212	100.61	'AIRDEPT4 138.00 - WILD MARY 138KV CKT 1'
13WP	00NR	0	'FROM->TO'	G11_054	'CIMARRON - DRAPER LAKE 345KV CKT 1'	717	0.212	100.61	'AIRDEPT4 138.00 - GM 138KV CKT 1'
13WP	00NR	0	'FROM->TO'	G11_054	'CIMARRON - DRAPER LAKE 345KV CKT 1'	717	0.212	100.35	'DRAPER LAKE - GM 138KV CKT 1'
13WP	00NR	0	'FROM->TO'	G11_054	'CIMARRON - DRAPER LAKE 345KV CKT 1'	717	0.212	101.64	'PENNSYLVANIA - WESTMOORE 138KV CKT 1'
13WP	00NR	0	'FROM->TO'	G11_054	'CIMARRON - DRAPER LAKE 345KV CKT 1'	717	0.212	101.46	'WESTMOORE - WILROGR4 138KV CKT 1'
13WP	00NR	0	'FROM->TO'	G11_054	'CIMARRON - DRAPER LAKE 345KV CKT 1'	717	0.212	103.64	'HUGO - SUNNYSIDE 345KV CKT 1'
13WP	00NR	0	'FROM->TO'	G11_054	'CIMARRON - DRAPER LAKE 345KV CKT 1'	717	0.212	102.98	'CIVIT - PAOLI 138KV CKT 1'
13WP	00NR	0	'FROM->TO'	G11_054	'CIMARRON - DRAPER LAKE 345KV CKT 1'	717	0.212	102.93	'CIVIT - STRATFORD 138KV CKT 1'
13WP	00NR	0	'FROM->TO'	G11_054	'CIMARRON - DRAPER LAKE 345KV CKT 1'	717	0.212	102.87	'OIL CENTER - STRATFORD 138KV CKT 1'
13WP	00NR	0	'FROM->TO'	G11_054	'CIMARRON - DRAPER LAKE 345KV CKT 1'	717	0.212	102.80	'LATTA JCT - OIL CENTER 138KV CKT 1'
13WP	00NR	0	'FROM->TO'	G11_054	'CIMARRON - DRAPER LAKE 345KV CKT 1'	717	0.212	101.19	'MAUD - SEMINOLE 138KV CKT 1'
13WP	00NR	0	'FROM->TO'	G11_054	'CIMARRON - DRAPER LAKE 345KV CKT 1'	717	0.212	102.91	'HAMMETT TAP - HORSESHOE LAKE 138KV CKT 1'
13WP	00NR	0	'FROM->TO'	G11_054	'CIMARRON - DRAPER LAKE 345KV CKT 1'	717	0.212	100.00	'CHAMBER SPRINGS - CLARKSVILLE 345KV CKT 1'
13WP	00NR	0	'FROM->TO'	G11_054	'CIMARRON - DRAPER LAKE 345KV CKT 1'	717	0.212	103.77	'BENTON - WICHITA 345KV CKT 1'
13WP	00NR	0	'FROM->TO'	G11_054	'CIMARRON - DRAPER LAKE 345KV CKT 1'	717	0.212	103.54	'CORN TAP - PAOLI 138KV CKT 1'
13WP	00NR	0	'FROM->TO'	G11_054	'CIMARRON - DRAPER LAKE 345KV CKT 1'	717	0.212	102.75	'PENNSYLVANIA - SANTA FE 138KV CKT 1'
13WP	00NR	0	'FROM->TO'	G11_054	'CIMARRON - DRAPER LAKE 345KV CKT 1'	717	0.212	102.69	'SAPULPA ROAD - WEKIWA 345KV CKT 1'
13WP	00NR	0	'FROM->TO'	G11_054	'CIMARRON - DRAPER LAKE 345KV CKT 1'	717	0.212	103.16	'THISTLE 7 345.00 - WOODWARD DISTRICT EHV 345KV CKT 1'
13WP	00NR	0	'FROM->TO'	G11_054	'CIMARRON - DRAPER LAKE 345KV CKT 1'	717	0.212	103.16	'THISTLE 7 345.00 - WOODWARD DISTRICT EHV 345KV CKT 2'
13WP	00NR	0	'FROM->TO'	G11_054	'CIMARRON - DRAPER LAKE 345KV CKT 1'	717	0.212	101.56	'DELAWARE - NORTHEAST STATION 345KV CKT 1'
13WP	00NR	0	'FROM->TO'	G11_054	'CIMARRON - DRAPER LAKE 345KV CKT 1'	717	0.212	103.26	'TULSA NORTH - WEKIWA 345KV CKT 1'
13WP	00NR	0	'FROM->TO'	G11_054	'CIMARRON - DRAPER LAKE 345KV CKT 1'	717	0.212	103.08	'LONEOAK - NORTHWEST 138KV CKT 1'
13WP	00NR	0	'FROM->TO'	G11_054	'CIMARRON - DRAPER LAKE 345KV CKT 1'	717	0.212	102.94	'LONEOAK - QUAIL CREEK 138KV CKT 1'
13WP	00NR	0	'FROM->TO'	G11_054	'CIMARRON - DRAPER LAKE 345KV CKT 1'	717	0.212	101.56	'HOLLYWOOD - MIDWEST TAP 138KV CKT 1'
13WP	00NR	0	'FROM->TO'	G11_054	'CIMARRON - DRAPER LAKE 345KV CKT 1'	717	0.212	103.04	'KETCH - KETCH TAP 138KV CKT 1'

SEASON	GROUP	SCENARIO	DIRECTION	SOURCE	MONITORED ELEMENT	RATE B (MVA)	TDF	(%MVA) LOADING	CONTINGENCY
13WP	00NR	0	'FROM->TO'	G11_054	'CIMARRON - DRAPER LAKE 345KV CKT 1'	717	0.212	102.75	'HEALDTON - LOCO 138KV CKT 1'
13WP	00NR	0	'FROM->TO'	G11_054	'CIMARRON - DRAPER LAKE 345KV CKT 1'	717	0.212	103.23	'HUGO - VALLIANT 345KV CKT 1'
13WP	00NR	0	'FROM->TO'	G11_054	'CIMARRON - DRAPER LAKE 345KV CKT 1'	717	0.212	102.94	'DIVISION AVE - MUSTANG 138KV CKT 1'
13WP	00NR	0	'FROM->TO'	G11_054	'CIMARRON - DRAPER LAKE 345KV CKT 1'	717	0.212	102.75	'OUMED 4 - STONEWALL 138KV CKT 1'
13WP	00NR	0	'FROM->TO'	G11_054	'CIMARRON - DRAPER LAKE 345KV CKT 1'	717	0.212	102.74	'OUMED 4 - PARK PLACE 138KV CKT 1'
13WP	00NR	0	'FROM->TO'	G11_054	'CIMARRON - DRAPER LAKE 345KV CKT 1'	717	0.212	101.56	'OGE3TERM33'
13WP	00NR	0	'FROM->TO'	G11_054	'CIMARRON - DRAPER LAKE 345KV CKT 1'	717	0.212	100.76	'FT SMITH - MUSKOGEE 345KV CKT 1'
13WP	00NR	0	'FROM->TO'	G11_054	'CIMARRON - DRAPER LAKE 345KV CKT 1'	717	0.212	103.55	'LACYGNE - NEOSHO 345KV CKT 1'
13WP	00NR	0	'FROM->TO'	G11_054	'CIMARRON - DRAPER LAKE 345KV CKT 1'	717	0.212	103.25	'MINGO - RED WILLOW 345KV CKT 1'
13WP	00NR	0	'FROM->TO'	G11_054	'CIMARRON - DRAPER LAKE 345KV CKT 1'	717	0.212	102.59	'COUNCIL - MUSTANG 138KV CKT 1'
13WP	00NR	0	'FROM->TO'	G11_054	'CIMARRON - DRAPER LAKE 345KV CKT 1'	717	0.212	103.02	'COMANCHE - LOCO 138KV CKT 1'
13WP	00NR	0	'FROM->TO'	G11_054	'CIMARRON - DRAPER LAKE 345KV CKT 1'	717	0.212	101.71	'ARBUCKLE - VANOSS 138KV CKT 1'
13WP	00NR	0	'FROM->TO'	G11_054	'CIMARRON - DRAPER LAKE 345KV CKT 1'	717	0.211	103.35	'EMPORIA ENERGY CENTER - WICHITA 345KV CKT 1'
13WP	00NR	0	'FROM->TO'	G11_054	'CIMARRON - DRAPER LAKE 345KV CKT 1'	717	0.211	105.38	'ANDERSONCO 345.00 - LACYGNE 345KV CKT 1'
13WP	00NR	0	'FROM->TO'	G11_054	'CIMARRON - DRAPER LAKE 345KV CKT 1'	717	0.211	105.27	'ANDERSONCO 345.00 - WOLF CREEK 345KV CKT 1'
13WP	00NR	0	'FROM->TO'	G11_054	'CIMARRON - DRAPER LAKE 345KV CKT 1'	717	0.211	103.33	'OGE3TERM17'
13WP	00NR	0	'FROM->TO'	G11_054	'CIMARRON - DRAPER LAKE 345KV CKT 1'	717	0.211	103.22	'MINGO - SETAB 345KV CKT 1'
13WP	00NR	0	'FROM->TO'	G11_054	'CIMARRON - DRAPER LAKE 345KV CKT 1'	717	0.211	101.19	'PARK LANE - SEMINOLE 138KV CKT 1'
13WP	00NR	0	'FROM->TO'	G11_054	'CIMARRON - DRAPER LAKE 345KV CKT 1'	717	0.211	103.93	'AXTELL - POST ROCK 345KV CKT 1'
13WP	00NR	0	'FROM->TO'	G11_054	'CIMARRON - DRAPER LAKE 345KV CKT 1'	717	0.211	103.62	'BLACKBERRY - NEOSHO 345KV CKT 1'
13WP	00NR	0	'FROM->TO'	G11_054	'CIMARRON - DRAPER LAKE 345KV CKT 1'	717	0.211	101.55	'DISCVRY - FOSTER 138KV CKT 1'
13WP	00NR	0	'FROM->TO'	G11_054	'CIMARRON - DRAPER LAKE 345KV CKT 1'	717	0.211	101.38	'DISCVRY - OAKCREEK 138KV CKT 1'
13WP	00NR	0	'FROM->TO'	G11_054	'CIMARRON - DRAPER LAKE 345KV CKT 1'	717	0.211	102.69	'5LOCSTGV - MAID 161KV CKT 1'
13WP	00NR	0	'FROM->TO'	G11_054	'CIMARRON - DRAPER LAKE 345KV CKT 1'	717	0.211	102.68	'DBL-FINY-HOL'
13WP	00NR	0	'FROM->TO'	G11_054	'CIMARRON - DRAPER LAKE 345KV CKT 1'	717	0.211	102.68	'5CDRCRST 161.00 - 5LOCSTGV 161KV CKT 1'
13WP	00NR	0	'FROM->TO'	G11_054	'CIMARRON - DRAPER LAKE 345KV CKT 1'	717	0.211	101.09	'BEAVER CO 345.00 - WOODWARD DISTRICT EHV 345KV CKT 1'
13WP	00NR	0	'FROM->TO'	G11_054	'CIMARRON - DRAPER LAKE 345KV CKT 1'	717	0.211	102.54	'HEFNER - TULSA 138KV CKT 1'
13WP	00NR	0	'FROM->TO'	G11_054	'CIMARRON - DRAPER LAKE 345KV CKT 1'	717	0.211	104.10	'OGE3TERM14'
13WP	00NR	0	'FROM->TO'	G11_054	'CIMARRON - DRAPER LAKE 345KV CKT 1'	717	0.211	102.98	'OGE3TERM13'
13WP	00NR	0	'FROM->TO'	G11_054	'CIMARRON - DRAPER LAKE 345KV CKT 1'	717	0.211	102.96	'NORTHWEST - PANTHER 138KV CKT 1'
13WP	00NR	0	'FROM->TO'	G11_054	'CIMARRON - DRAPER LAKE 345KV CKT 1'	717	0.211	102.92	'PANTHER - SILVER LAKE 138KV CKT 1'
13WP	00NR	0	'FROM->TO'	G11_054	'CIMARRON - DRAPER LAKE 345KV CKT 1'	717	0.211	103.26	'SWISSVALE - WEST GARDNER 345KV CKT 1'
13WP	00NR	0	'FROM->TO'	G11_054	'CIMARRON - DRAPER LAKE 345KV CKT 1'	717	0.211	102.88	'HOLCOMB - SETAB 345KV CKT 1'
13WP	00NR	0	'FROM->TO'	G11_054	'CIMARRON - DRAPER LAKE 345KV CKT 1'	717	0.211	102.74	'EL RENO SW - MUSTANG 69KV CKT 1'
13WP	00NR	0	'FROM->TO'	G11_054	'CIMARRON - DRAPER LAKE 345KV CKT 1'	717	0.211	102.74	'ANADARKO - BLANCHARD 69KV CKT 1'
13WP	00NR	0	'FROM->TO'	G11_054	'CIMARRON - DRAPER LAKE 345KV CKT 1'	717	0.211	103.18	'OVERTON-TRF'
13WP	00NR	0	'FROM->TO'	G11_054	'CIMARRON - DRAPER LAKE 345KV CKT 1'	717	0.211	102.95	'HAMMETT TAP - HAMMETT2 138KV CKT 1'
13WP	00NR	0	'FROM->TO'	G11_054	'CIMARRON - DRAPER LAKE 345KV CKT 1'	717	0.211	102.83	'HAMMETT2 - MEEKER 138KV CKT 1'
13WP	00NR	0	'FROM->TO'	G11_054	'CIMARRON - DRAPER LAKE 345KV CKT 1'	717	0.211	101.73	'SEMINOLE - VANOSS 138KV CKT 1'
13WP	00NR	0	'FROM->TO'	G11_054	'CIMARRON - DRAPER LAKE 345KV CKT 1'	717	0.211	103.74	'G11-17T 345.00 - POST ROCK 345KV CKT 1'
13WP	00NR	0	'FROM->TO'	G11_054	'CIMARRON - DRAPER LAKE 345KV CKT 1'	717	0.211	103.25	'7OVERTON 345.00 - SIBLEY 345KV CKT 1'
13WP	00NR	0	'FROM->TO'	G11_054	'CIMARRON - DRAPER LAKE 345KV CKT 1'	717	0.211	103.09	'THISTLE 7 345.00 - WICHITA 345KV CKT 1'
13WP	00NR	0	'FROM->TO'	G11_054	'CIMARRON - DRAPER LAKE 345KV CKT 1'	717	0.211	103.09	'THISTLE 7 345.00 - WICHITA 345KV CKT 2'
13WP	00NR	0	'FROM->TO'	G11_054	'CIMARRON - DRAPER LAKE 345KV CKT 1'	717	0.211	102.91	'ANADARKO - GEORGIA 138KV CKT 1'
13WP	00NR	0	'FROM->TO'	G11_054	'CIMARRON - DRAPER LAKE 345KV CKT 1'	717	0.211	102.87	'FLETCHER - GEORGIA 138KV CKT 1'
13WP	00NR	0	'FROM->TO'	G11_054	'CIMARRON - DRAPER LAKE 345KV CKT 1'	717	0.211	102.99	'EMPORIA ENERGY CENTER - SWISSVALE 345KV CKT 1'
13WP	00NR	0	'FROM->TO'	G11_054	'CIMARRON - DRAPER LAKE 345KV CKT 1'	717	0.211	102.81	'CHERRY CREEK - PLEASANT VALLEY 138KV CKT 1'
13WP	00NR	0	'FROM->TO'	G11_054	'CIMARRON - DRAPER LAKE 345KV CKT 1'	717	0.211	102.68	'BOYD - CHERRY CREEK 138KV CKT 1'
13WP	00NR	0	'FROM->TO'	G11_054	'CIMARRON - DRAPER LAKE 345KV CKT 1'	717	0.211	103.73	'WRTOD400'
13WP	00NR	0	'FROM->TO'	G11_054	'CIMARRON - DRAPER LAKE 345KV CKT 1'	717	0.211	103.64	'HOYT - JEFFREY ENERGY CENTER 345KV CKT 1'
13WP	00NR	0	'FROM->TO'	G11_054	'CIMARRON - DRAPER LAKE 345KV CKT 1'	717	0.211	103.44	'HOYT - STRANGER CREEK 345KV CKT 1'
13WP	00NR	0	'FROM->TO'	G11_054	'CIMARRON - DRAPER LAKE 345KV CKT 1'	717	0.211	103.02	'CLEVELAND (CLVAUTO1) 345/138/13.8KV TRANSFORMER CKT 1'
13WP	00NR	0	'FROM->TO'	G11_054	'CIMARRON - DRAPER LAKE 345KV CKT 1'	717	0.211	102.73	'EMPIRE - FLETCHER 138KV CKT 1'
13WP	00NR	0	'FROM->TO'	G11_054	'CIMARRON - DRAPER LAKE 345KV CKT 1'	717	0.211	102.68	'COMANCHE - EMPIRE 138KV CKT 1'
13WP	00NR	0	'FROM->TO'	G11_054	'CIMARRON - DRAPER LAKE 345KV CKT 1'	717	0.211	103.08	'OGE3TERM19'
13WP	00NR	0	'FROM->TO'	G11_054	'CIMARRON - DRAPER LAKE 345KV CKT 1'	717	0.211	102.82	'RENO COUNTY - SUMMIT 345KV CKT 1'
13WP	00NR	0	'FROM->TO'	G11_054	'CIMARRON - DRAPER LAKE 345KV CKT 1'	717	0.211	101.58	'CANADIAN RIVER - MCALESTER SOUTH 138KV CKT 1'
13WP	00NR	0	'FROM->TO'	G11_054	'CIMARRON - DRAPER LAKE 345KV CKT 1'	717	0.211	101.57	'CANADIAN RIVER () 345/138/13.8KV TRANSFORMER CKT 1'
13WP	00NR	0	'FROM->TO'	G11_054	'CIMARRON - DRAPER LAKE 345KV CKT 1'	717	0.211	101.40	'KEO EHV - WEST MEMPHIS 500 500KV CKT 1'
13WP	00NR	0	'FROM->TO'	G11_054	'CIMARRON - DRAPER LAKE 345KV CKT 1'	717	0.211	103.25	'DBL-CIR-RENO'
13WP	00NR	0	'FROM->TO'	G11_054	'CIMARRON - DRAPER LAKE 345KV CKT 1'	717	0.211	103.24	'DBL-MULG-CIR'
13WP	00NR	0	'FROM->TO'	G11_054	'CIMARRON - DRAPER LAKE 345KV CKT 1'	717	0.211	103.21	'DBL-SPRVL-MU'
13WP	00NR	0	'FROM->TO'	G11_054	'CIMARRON - DRAPER LAKE 345KV CKT 1'	717	0.211	101.72	'8BHAM STEEL 500.00 - WEST MEMPHIS 500 500KV CKT 1'
13WP	00NR	0	'FROM->TO'	G11_054	'CIMARRON - DRAPER LAKE 345KV CKT 1'	717	0.211	101.71	'AMRN_OUTS5'
13WP	00NR	0	'FROM->TO'	G11_054	'CIMARRON - DRAPER LAKE 345KV CKT 1'	717	0.211	104.19	'OGE3TERM12'
13WP	00NR	0	'FROM->TO'	G11_054	'CIMARRON - DRAPER LAKE 345KV CKT 1'	717	0.211	101.71	'ARKANSAS NUCLEAR ONE - PLEASANT HILL 500KV CKT 1'
13WP	00NR	0	'FROM->TO'	G11_054	'CIMARRON - DRAPER LAKE 345KV CKT 1'	717	0.211	102.96	'AXTELL - PAULINE 345KV CKT 1'
13WP	00NR	0	'FROM->TO'	G11_054	'CIMARRON - DRAPER LAKE 345KV CKT 1'	717	0.211	102.83	'OGE3TERM28'
13WP	00NR	0	'FROM->TO'	G11_054	'CIMARRON - DRAPER LAKE 345KV CKT 1'	717	0.211	101.38	'DELL 500 - INDEPENDENCE 500KV CKT 1'
13WP	00NR	0	'FROM->TO'	G11_054	'CIMARRON - DRAPER LAKE 345KV CKT 1'	717	0.211	103.01	'GRAND ISLAND - SWEETWATER 345KV CKT 1'
13WP	00NR	0	'FROM->TO'	G11_054	'CIMARRON - DRAPER LAKE 345KV CKT 1'	717	0.211	102.83	'MOORE - PAULINE 345KV CKT 1'
13WP	00NR	0	'FROM->TO'	G11_054	'CIMARRON - DRAPER LAKE 345KV CKT 1'	717	0.211	101.76	'Hitchland Interchange - WOODWARD DISTRICT EHV 345KV CKT 2'
13WP	00NR	0	'FROM->TO'	G11_054	'CIMARRON - DRAPER LAKE 345KV CKT 1'	717	0.211	101.77	'ROSE HILL - WOLF CREEK 345KV CKT 1'
13WP	00NR	0	'FROM->TO'	G11_054	'CIMARRON - DRAPER LAKE 345KV CKT 1'	717	0.211	101.57	'DBL-CLRK-G11'
13WP	00NR	0	'FROM->TO'	G11_054	'CIMARRON - DRAPER LAKE 345KV CKT 1'	717	0.211	101.50	'DBL-HTCH-BVR'
13WP	00NR	0	'FROM->TO'	G11_054	'CIMARRON - DRAPER LAKE 345KV CKT 1'	717	0.211	101.14	'DBL-THIS-CLR'
13WP	00NR	0	'FROM->TO'	G11_054	'CIMARRON - DRAPER LAKE 345KV CKT 1'	717	0.211	102.94	'AI43'
13WP	00NR	0	'FROM->TO'	G11_054	'CIMARRON - DRAPER LAKE 345KV CKT 1'	717	0.211	102.93	'7LUTESVIL 345.00 - 7ST FRANC 345.00 345KV CKT 1'

SEASON	GROUP	SCENARIO	DIRECTION	SOURCE	MONITORED ELEMENT	RATE B (MVA)	TDF	(%MVA) LOADING	CONTINGENCY
13WP	00NR	0	'FROM->TO'	G11_054	'CIMARRON - DRAPER LAKE 345KV CKT 1'	717	0.211	102.87	'CLINTON - MONTROSE 161KV CKT 1'
13WP	00NR	0	'FROM->TO'	G11_054	'CIMARRON - DRAPER LAKE 345KV CKT 1'	717	0.211	102.70	'NEOSHO (NEOSHO2X) 345/161/13.8KV TRANSFORMER CKT 1'
13WP	00NR	0	'FROM->TO'	G11_054	'CIMARRON - DRAPER LAKE 345KV CKT 1'	717	0.211	102.98	'7JASPER 345.00 - MORGAN 345KV CKT 1'
13WP	00NR	0	'FROM->TO'	G11_054	'CIMARRON - DRAPER LAKE 345KV CKT 1'	717	0.211	102.95	'GRDA-OPGD-05'
13WP	00NR	0	'FROM->TO'	G11_054	'CIMARRON - DRAPER LAKE 345KV CKT 1'	717	0.211	103.25	'FAIRFAX TAP - SHIDLER 138KV CKT 1'
13WP	00NR	0	'FROM->TO'	G11_054	'CIMARRON - DRAPER LAKE 345KV CKT 1'	717	0.211	103.21	'SHIDLER - WEST PAWHUSKA 138KV CKT 1'
13WP	00NR	0	'FROM->TO'	G11_054	'CIMARRON - DRAPER LAKE 345KV CKT 1'	717	0.211	103.21	'PAWHUSKA TAP - WEST PAWHUSKA 138KV CKT 1'
13WP	00NR	0	'FROM->TO'	G11_054	'CIMARRON - DRAPER LAKE 345KV CKT 1'	717	0.211	103.16	'DOMES - PAWHUSKA TAP 138KV CKT 1'
13WP	00NR	0	'FROM->TO'	G11_054	'CIMARRON - DRAPER LAKE 345KV CKT 1'	717	0.211	103.13	'DOMES - MOUND ROAD 138KV CKT 1'
13WP	00NR	0	'FROM->TO'	G11_054	'CIMARRON - DRAPER LAKE 345KV CKT 1'	717	0.211	101.74	'BORDER 7345.00 - WOODWARD DISTRICT EHV 345KV CKT 1'
13WP	00NR	0	'FROM->TO'	G11_054	'CIMARRON - DRAPER LAKE 345KV CKT 1'	717	0.211	101.68	'OSAGE - WEBB CITY TAP 138KV CKT 1'
13WP	00NR	0	'FROM->TO'	G11_054	'CIMARRON - DRAPER LAKE 345KV CKT 1'	717	0.211	101.57	'BAXTER WILSON SES - PERRYVILLE 500KV CKT 1'
13WP	00NR	0	'FROM->TO'	G11_054	'CIMARRON - DRAPER LAKE 345KV CKT 1'	717	0.211	101.50	'FAIRFAX TAP - WEBB CITY TAP 138KV CKT 1'
13WP	00NR	0	'FROM->TO'	G11_054	'CIMARRON - DRAPER LAKE 345KV CKT 1'	717	0.211	102.97	'7JASPER 345.00 - BLACKBERRY 345KV CKT 1'
13WP	00NR	0	'FROM->TO'	G11_054	'CIMARRON - DRAPER LAKE 345KV CKT 1'	717	0.211	102.79	'ATCHSNT3 345.00 - BOONEVILLE 345KV CKT 1'
13WP	00NR	0	'FROM->TO'	G11_054	'CIMARRON - DRAPER LAKE 345KV CKT 1'	717	0.211	102.75	'EL RENO - ROMAN NOSE 138KV CKT 1'
13WP	00NR	0	'FROM->TO'	G11_054	'CIMARRON - DRAPER LAKE 345KV CKT 1'	717	0.211	102.72	'ROMAN NOSE - SOUTHARD 138KV CKT 1'
13WP	00NR	0	'FROM->TO'	G11_054	'CIMARRON - DRAPER LAKE 345KV CKT 1'	717	0.211	102.72	'ATCHSNT3 345.00 - COOPER 345KV CKT 1'
13WP	00NR	0	'FROM->TO'	G11_054	'CIMARRON - DRAPER LAKE 345KV CKT 1'	717	0.211	101.73	'OGE3TERM41'
13WP	00NR	0	'FROM->TO'	G11_054	'CIMARRON - DRAPER LAKE 345KV CKT 1'	717	0.211	101.64	'G11_040_TAP 138.00 - POOLEVILLE 138KV CKT 1'
13WP	00NR	0	'FROM->TO'	G11_054	'CIMARRON - DRAPER LAKE 345KV CKT 1'	717	0.211	103.14	'8DANIEL 500.00 - MCKNIGHT 500KV CKT 1'
13WP	00NR	0	'FROM->TO'	G11_054	'CIMARRON - DRAPER LAKE 345KV CKT 1'	717	0.211	102.98	'OGE3TERM3'
13WP	00NR	0	'FROM->TO'	G11_054	'CIMARRON - DRAPER LAKE 345KV CKT 1'	717	0.211	102.74	'SHERIDAN EHV - WHITE BLUFF 500KV CKT 1'
13WP	00NR	0	'FROM->TO'	G11_054	'CIMARRON - DRAPER LAKE 345KV CKT 1'	717	0.211	102.73	'LAKEOVER - MCADAMS 500KV CKT 1'
13WP	00NR	0	'FROM->TO'	G11_054	'CIMARRON - DRAPER LAKE 345KV CKT 1'	717	0.211	101.71	'BAXTER WILSON SES - RAY BRASWELL SES 500KV CKT 1'
13WP	00NR	0	'FROM->TO'	G11_054	'CIMARRON - DRAPER LAKE 345KV CKT 1'	717	0.211	110.45	'GEN336821 1-GRAND GULF UNIT'
13WP	00NR	0	'FROM->TO'	G11_054	'CIMARRON - DRAPER LAKE 345KV CKT 1'	717	0.211	110.25	'GEN336153 1-WATERFORD UNIT#3'
13WP	00NR	0	'FROM->TO'	G11_054	'CIMARRON - DRAPER LAKE 345KV CKT 1'	717	0.211	109.19	'GEN337911 1-ARKANSAS NUCLEAR ONE UNIT #2'
13WP	00NR	0	'FROM->TO'	G11_054	'CIMARRON - DRAPER LAKE 345KV CKT 1'	717	0.211	109.13	'GEN335831 1-RIVERBEND UNIT#1'
13WP	00NR	0	'FROM->TO'	G11_054	'CIMARRON - DRAPER LAKE 345KV CKT 1'	717	0.211	108.27	'GEN501801 1-DOLET HILLS UNIT1'
13WP	00NR	0	'FROM->TO'	G11_054	'CIMARRON - DRAPER LAKE 345KV CKT 1'	717	0.211	108.02	'GEN337910 1-ARKANSAS NUCLEAR ONE UNIT #1'
13WP	00NR	0	'FROM->TO'	G11_054	'CIMARRON - DRAPER LAKE 345KV CKT 1'	717	0.211	107.77	'GEN520947 1-HUGO1'
13WP	00NR	0	'FROM->TO'	G11_054	'CIMARRON - DRAPER LAKE 345KV CKT 1'	717	0.211	107.17	'GEN337652 1-WHITE BLUFF UNIT #1'
13WP	00NR	0	'FROM->TO'	G11_054	'CIMARRON - DRAPER LAKE 345KV CKT 1'	717	0.211	106.95	'GEN509416 1-TURK GENERATION'
13WP	00NR	0	'FROM->TO'	G11_054	'CIMARRON - DRAPER LAKE 345KV CKT 1'	717	0.211	106.94	'GEN509403 1-PIRKEY GENERATION'
13WP	00NR	0	'FROM->TO'	G11_054	'CIMARRON - DRAPER LAKE 345KV CKT 1'	717	0.211	106.90	'GEN515042 1-SEMINOLE 3G'
13WP	00NR	0	'FROM->TO'	G11_054	'CIMARRON - DRAPER LAKE 345KV CKT 1'	717	0.211	106.82	'GEN337653 1-WHITE BLUFF UNIT #2'
13WP	00NR	0	'FROM->TO'	G11_054	'CIMARRON - DRAPER LAKE 345KV CKT 1'	717	0.211	106.75	'GEN336251 1-NINEMILE POINT UNIT#4'
13WP	00NR	0	'FROM->TO'	G11_054	'CIMARRON - DRAPER LAKE 345KV CKT 1'	717	0.211	106.70	'GEN515040 1-SEMINOLE 1G'
13WP	00NR	0	'FROM->TO'	G11_054	'CIMARRON - DRAPER LAKE 345KV CKT 1'	717	0.211	106.61	'GEN501813 1-RODEMACHER UNIT 3'
13WP	00NR	0	'FROM->TO'	G11_054	'CIMARRON - DRAPER LAKE 345KV CKT 1'	717	0.211	106.60	'GEN338146 1-INDEPENDENCE UNIT #2'
13WP	00NR	0	'FROM->TO'	G11_054	'CIMARRON - DRAPER LAKE 345KV CKT 1'	717	0.211	106.44	'GEN337041 1-GERALD ANDRUS'
13WP	00NR	0	'FROM->TO'	G11_054	'CIMARRON - DRAPER LAKE 345KV CKT 1'	717	0.211	106.43	'GEN338143 1-INDEPENDENCE UNIT #1'
13WP	00NR	0	'FROM->TO'	G11_054	'CIMARRON - DRAPER LAKE 345KV CKT 1'	717	0.211	106.30	'GEN515041 1-SEMINOLE 2G'
13WP	00NR	0	'FROM->TO'	G11_054	'CIMARRON - DRAPER LAKE 345KV CKT 1'	717	0.211	106.03	'GEN509406 1-WELSH #3'
13WP	00NR	0	'FROM->TO'	G11_054	'CIMARRON - DRAPER LAKE 345KV CKT 1'	717	0.211	106.03	'GEN509405 1-WELSH #2'
13WP	00NR	0	'FROM->TO'	G11_054	'CIMARRON - DRAPER LAKE 345KV CKT 1'	717	0.211	106.03	'GEN509404 1-WELSH #1'
13WP	00NR	0	'FROM->TO'	G11_054	'CIMARRON - DRAPER LAKE 345KV CKT 1'	717	0.211	106.02	'GEN334440 1-SABINE UNIT 4'
13WP	00NR	0	'FROM->TO'	G11_054	'CIMARRON - DRAPER LAKE 345KV CKT 1'	717	0.211	106.02	'GEN501812 1-RODEMACHER UNIT 2'
13WP	00NR	0	'FROM->TO'	G11_054	'CIMARRON - DRAPER LAKE 345KV CKT 1'	717	0.211	105.89	'GEN335206 1-NELSON UNIT 6'
13WP	00NR	0	'FROM->TO'	G11_054	'CIMARRON - DRAPER LAKE 345KV CKT 1'	717	0.211	105.77	'GEN515226 1-MUSKOGEE 6G'
13WP	00NR	0	'FROM->TO'	G11_054	'CIMARRON - DRAPER LAKE 345KV CKT 1'	717	0.211	105.69	'GEN336831 1-BAXTER WILSON SES'
13WP	00NR	0	'FROM->TO'	G11_054	'CIMARRON - DRAPER LAKE 345KV CKT 1'	717	0.211	105.56	'GEN334441 1-SABINE UNIT 5'
13WP	00NR	0	'FROM->TO'	G11_054	'CIMARRON - DRAPER LAKE 345KV CKT 1'	717	0.211	105.40	'GEN338388 1-1PLUMPT 23.000'
13WP	00NR	0	'FROM->TO'	G11_054	'CIMARRON - DRAPER LAKE 345KV CKT 1'	717	0.211	105.29	'GEN515223 1-MUSKOGEE 4G'
13WP	00NR	0	'FROM->TO'	G11_054	'CIMARRON - DRAPER LAKE 345KV CKT 1'	717	0.211	105.25	'GEN335204 1-NELSON UNIT 4'
13WP	00NR	0	'FROM->TO'	G11_054	'CIMARRON - DRAPER LAKE 345KV CKT 1'	717	0.211	105.24	'GEN515225 1-MUSKOGEE 5G'
13WP	00NR	0	'FROM->TO'	G11_054	'CIMARRON - DRAPER LAKE 345KV CKT 1'	717	0.211	105.17	'GEN334433 1-SABINE UNIT 3'
13WP	00NR	0	'FROM->TO'	G11_054	'CIMARRON - DRAPER LAKE 345KV CKT 1'	717	0.211	105.15	'GEN336801 1-BAXTER WILSON UNIT #1'
13WP	00NR	0	'FROM->TO'	G11_054	'CIMARRON - DRAPER LAKE 345KV CKT 1'	717	0.211	104.07	'GEN336170 1-GULF OXY U4'
13WP	00NR	0	'FROM->TO'	G11_054	'CIMARRON - DRAPER LAKE 345KV CKT 1'	717	0.211	103.92	'GEN334070 1-LEWIS CREEK 1'
13WP	00NR	0	'FROM->TO'	G11_054	'CIMARRON - DRAPER LAKE 345KV CKT 1'	717	0.211	103.89	'GEN334071 1-LEWIS CREEK 2'
13WP	00NR	0	'FROM->TO'	G11_054	'CIMARRON - DRAPER LAKE 345KV CKT 1'	717	0.211	103.74	'GEN300006 1-NEW MADRID UNIT 1'
13WP	00NR	0	'FROM->TO'	G11_054	'CIMARRON - DRAPER LAKE 345KV CKT 1'	717	0.211	103.72	'GEN300007 1-NEW MADRID UNIT 2'
13WP	00NR	0	'FROM->TO'	G11_054	'CIMARRON - DRAPER LAKE 345KV CKT 1'	717	0.211	103.63	'GEN509391 G1-ARSENAL HILL GENS #2 (STALL)'
13WP	00NR	0	'FROM->TO'	G11_054	'CIMARRON - DRAPER LAKE 345KV CKT 1'	717	0.211	103.63	'GEN509392 G2-ARSENAL HILL GENS #3 (STALL)'
13WP	00NR	0	'FROM->TO'	G11_054	'CIMARRON - DRAPER LAKE 345KV CKT 1'	717	0.211	103.61	'GEN334432 1-SABINE UNIT 2'
13WP	00NR	0	'FROM->TO'	G11_054	'CIMARRON - DRAPER LAKE 345KV CKT 1'	717	0.211	103.56	'GEN334030 1-FRONTIER UNIT 1'
13WP	00NR	0	'FROM->TO'	G11_054	'CIMARRON - DRAPER LAKE 345KV CKT 1'	717	0.211	103.56	'GEN334031 1-FRONTIER UNIT 2'
13WP	00NR	0	'FROM->TO'	G11_054	'CIMARRON - DRAPER LAKE 345KV CKT 1'	717	0.211	103.55	'GEN509393 S1-ARSENAL HILL GENS #4 (STALL)'
13WP	00NR	0	'FROM->TO'	G11_054	'CIMARRON - DRAPER LAKE 345KV CKT 1'	717	0.211	103.54	'GEN334431 1-SABINE UNIT 1'
13WP	00NR	0	'FROM->TO'	G11_054	'CIMARRON - DRAPER LAKE 345KV CKT 1'	717	0.211	103.54	'GEN509394 1-FLINT CREEK'
13WP	00NR	0	'FROM->TO'	G11_054	'CIMARRON - DRAPER LAKE 345KV CKT 1'	717	0.211	103.51	'GEN514998 1-MCCLAIN UNIT 1'
13WP	00NR	0	'FROM->TO'	G11_054	'CIMARRON - DRAPER LAKE 345KV CKT 1'	717	0.211	103.51	'GEN503909 1-FULTONU1 1 16.000'
13WP	00NR	0	'FROM->TO'	G11_054	'CIMARRON - DRAPER LAKE 345KV CKT 1'	717	0.211	103.50	'GEN335612 1-WILLOW GLENN UNIT#2'
13WP	00NR	0	'FROM->TO'	G11_054	'CIMARRON - DRAPER LAKE 345KV CKT 1'	717	0.211	103.50	'GEN509408 1-WILKES #2'
13WP	00NR	0	'FROM->TO'	G11_054	'CIMARRON - DRAPER LAKE 345KV CKT 1'	717	0.211	103.45	'GEN511843 1-RIVERSIDE STATION #2'
13WP	00NR	0	'FROM->TO'	G11_054	'CIMARRON - DRAPER LAKE 345KV CKT 1'	717	0.211	103.42	'GEN506752 1-LEBROCK GAS 1'

SEASON	GROUP	SCENARIO	DIRECTION	SOURCE	MONITORED ELEMENT	RATE B (MVA)	TDF	(%MVA) LOADING	CONTINGENCY
13WP	00NR	0	'FROM->TO'	G11_054	'CIMARRON - DRAPER LAKE 345KV CKT 1'	717	0.211	103.42	'GEN337429 1-PERYVILLE UNIT #2'
13WP	00NR	0	'FROM->TO'	G11_054	'CIMARRON - DRAPER LAKE 345KV CKT 1'	717	0.211	103.42	'GEN337432 1-PERYVILLE UNIT #5'
13WP	00NR	0	'FROM->TO'	G11_054	'CIMARRON - DRAPER LAKE 345KV CKT 1'	717	0.211	103.37	'GEN337428 1-PERYVILLE UNIT #1'
13WP	00NR	0	'FROM->TO'	G11_054	'CIMARRON - DRAPER LAKE 345KV CKT 1'	717	0.211	103.37	'GEN337430 1-PERYVILLE UNIT #3'
13WP	00NR	0	'FROM->TO'	G11_054	'CIMARRON - DRAPER LAKE 345KV CKT 1'	717	0.211	103.37	'GEN335075 1-DYNEGY#1'
13WP	00NR	0	'FROM->TO'	G11_054	'CIMARRON - DRAPER LAKE 345KV CKT 1'	717	0.211	103.35	'GEN335203 1-NELSON UNIT 3'
13WP	00NR	0	'FROM->TO'	G11_054	'CIMARRON - DRAPER LAKE 345KV CKT 1'	717	0.211	103.35	'GEN336167 1-GULF OXY U1'
13WP	00NR	0	'FROM->TO'	G11_054	'CIMARRON - DRAPER LAKE 345KV CKT 1'	717	0.211	103.35	'GEN336168 1-GULF OXY U2'
13WP	00NR	0	'FROM->TO'	G11_054	'CIMARRON - DRAPER LAKE 345KV CKT 1'	717	0.211	103.35	'GEN336169 1-GULF OXY U3'
13WP	00NR	0	'FROM->TO'	G11_054	'CIMARRON - DRAPER LAKE 345KV CKT 1'	717	0.211	103.34	'GEN318007 1-5MOROW161 161.00'
13WP	00NR	0	'FROM->TO'	G11_054	'CIMARRON - DRAPER LAKE 345KV CKT 1'	717	0.211	103.31	'GEN337421 1-OUCHITA CTG1'
13WP	00NR	0	'FROM->TO'	G11_054	'CIMARRON - DRAPER LAKE 345KV CKT 1'	717	0.211	103.31	'GEN337423 1-OUCHITA CTG2'
13WP	00NR	0	'FROM->TO'	G11_054	'CIMARRON - DRAPER LAKE 345KV CKT 1'	717	0.211	103.31	'GEN337425 1-OUCHITA CTG3'
13WP	00NR	0	'FROM->TO'	G11_054	'CIMARRON - DRAPER LAKE 345KV CKT 1'	717	0.211	103.31	'GEN512688 2-GRDA1 GSU2 22'
13WP	00NR	0	'FROM->TO'	G11_054	'CIMARRON - DRAPER LAKE 345KV CKT 1'	717	0.211	103.29	'GEN334392 1-EXXON MOBIL IPP 1'
13WP	00NR	0	'FROM->TO'	G11_054	'CIMARRON - DRAPER LAKE 345KV CKT 1'	717	0.211	103.22	'GEN337006 1-DUKE MCADAMS G1'
13WP	00NR	0	'FROM->TO'	G11_054	'CIMARRON - DRAPER LAKE 345KV CKT 1'	717	0.211	103.22	'GEN337007 1-DUKE MCADAMS G2'
13WP	00NR	0	'FROM->TO'	G11_054	'CIMARRON - DRAPER LAKE 345KV CKT 1'	717	0.211	103.20	'GEN512689 1-GRDA1 GSU1 22'
13WP	00NR	0	'FROM->TO'	G11_054	'CIMARRON - DRAPER LAKE 345KV CKT 1'	717	0.211	103.20	'GEN337008 1-DUKE MCADAMS S1'
13WP	00NR	0	'FROM->TO'	G11_054	'CIMARRON - DRAPER LAKE 345KV CKT 1'	717	0.211	103.18	'GEN505432 1-SIKESTON'
13WP	00NR	0	'FROM->TO'	G11_054	'CIMARRON - DRAPER LAKE 345KV CKT 1'	717	0.211	103.16	'GEN338500 1-MCCLELLAN UNIT #1'
13WP	00NR	0	'FROM->TO'	G11_054	'CIMARRON - DRAPER LAKE 345KV CKT 1'	717	0.211	103.09	'GEN515266 1-AES 1G'
13WP	00NR	0	'FROM->TO'	G11_054	'CIMARRON - DRAPER LAKE 345KV CKT 1'	717	0.211	103.09	'GEN515267 1-AES 2G'
13WP	00NR	0	'FROM->TO'	G11_054	'CIMARRON - DRAPER LAKE 345KV CKT 1'	717	0.211	103.07	'GEN335611 1-WILLOW GLENN UNIT#1'
13WP	00NR	0	'FROM->TO'	G11_054	'CIMARRON - DRAPER LAKE 345KV CKT 1'	717	0.211	103.05	'GEN511840 1-NORTHEASTERN STATION #3'
13WP	00NR	0	'FROM->TO'	G11_054	'CIMARRON - DRAPER LAKE 345KV CKT 1'	717	0.211	103.05	'GEN337954 1-LYNCH UNIT #3'
13WP	00NR	0	'FROM->TO'	G11_054	'CIMARRON - DRAPER LAKE 345KV CKT 1'	717	0.211	103.03	'GEN511841 1-NORTHEASTERN STATION #4'
13WP	00NR	0	'FROM->TO'	G11_054	'CIMARRON - DRAPER LAKE 345KV CKT 1'	717	0.211	103.02	'GEN335201 1-NELSON UNIT 1'
13WP	00NR	0	'FROM->TO'	G11_054	'CIMARRON - DRAPER LAKE 345KV CKT 1'	717	0.211	103.01	'GEN511938 1-OEC STEAM # 1'
13WP	00NR	0	'FROM->TO'	G11_054	'CIMARRON - DRAPER LAKE 345KV CKT 1'	717	0.211	103.01	'GEN511839 1-NORTHEASTERN STATION #2'
13WP	00NR	0	'FROM->TO'	G11_054	'CIMARRON - DRAPER LAKE 345KV CKT 1'	717	0.211	103.01	'GEN335202 1-NELSON UNIT 2'
13WP	00NR	0	'FROM->TO'	G11_054	'CIMARRON - DRAPER LAKE 345KV CKT 1'	717	0.211	102.99	'GEN336944 1-REX BROWN'
13WP	00NR	0	'FROM->TO'	G11_054	'CIMARRON - DRAPER LAKE 345KV CKT 1'	717	0.211	102.96	'GEN506749 1-EASTMAN GENERATION A'
13WP	00NR	0	'FROM->TO'	G11_054	'CIMARRON - DRAPER LAKE 345KV CKT 1'	717	0.211	102.92	'GEN337422 1-OUCHITA STG1'
13WP	00NR	0	'FROM->TO'	G11_054	'CIMARRON - DRAPER LAKE 345KV CKT 1'	717	0.211	102.92	'GEN337424 1-OUCHITA STG2'
13WP	00NR	0	'FROM->TO'	G11_054	'CIMARRON - DRAPER LAKE 345KV CKT 1'	717	0.211	102.92	'GEN337426 1-OUCHITA STG3'
13WP	00NR	0	'FROM->TO'	G11_054	'CIMARRON - DRAPER LAKE 345KV CKT 1'	717	0.211	102.91	'GEN511842 1-RIVERSIDE STATION #1'
13WP	00NR	0	'FROM->TO'	G11_054	'CIMARRON - DRAPER LAKE 345KV CKT 1'	717	0.211	102.89	'GEN335137 C4-PPG'
13WP	00NR	0	'FROM->TO'	G11_054	'CIMARRON - DRAPER LAKE 345KV CKT 1'	717	0.211	102.89	'GEN338510 1-1S1KNWRI'
13WP	00NR	0	'FROM->TO'	G11_054	'CIMARRON - DRAPER LAKE 345KV CKT 1'	717	0.211	102.89	'GEN338511 1-1C7KNWRI'
13WP	00NR	0	'FROM->TO'	G11_054	'CIMARRON - DRAPER LAKE 345KV CKT 1'	717	0.211	102.87	'GEN338513 1-BAILEY UNIT #1'
13WP	00NR	0	'FROM->TO'	G11_054	'CIMARRON - DRAPER LAKE 345KV CKT 1'	717	0.211	102.82	'GEN500915 3-WESTERN KRAFT'
13WP	00NR	0	'FROM->TO'	G11_054	'CIMARRON - DRAPER LAKE 345KV CKT 1'	717	0.211	102.81	'GEN300015 1-1SGPDEL 18.000'
13WP	00NR	0	'FROM->TO'	G11_054	'CIMARRON - DRAPER LAKE 345KV CKT 1'	717	0.211	102.81	'GEN300016 1-1G1GPDEL 18.000'
13WP	00NR	0	'FROM->TO'	G11_054	'CIMARRON - DRAPER LAKE 345KV CKT 1'	717	0.211	102.81	'GEN300017 1-1G2GPDEL 18.000'
13WP	00NR	0	'FROM->TO'	G11_054	'CIMARRON - DRAPER LAKE 345KV CKT 1'	717	0.211	102.80	'GEN501910 1-ACADIA UNIT ST1'
13WP	00NR	0	'FROM->TO'	G11_054	'CIMARRON - DRAPER LAKE 345KV CKT 1'	717	0.211	102.79	'GEN334467 1-DUPONT UNIT#1'
13WP	00NR	0	'FROM->TO'	G11_054	'CIMARRON - DRAPER LAKE 345KV CKT 1'	717	0.211	102.79	'GEN503900 1-FITZHUGH CT1'
13WP	00NR	0	'FROM->TO'	G11_054	'CIMARRON - DRAPER LAKE 345KV CKT 1'	717	0.211	102.79	'GEN334335 1-TOLEDO BEND'
13WP	00NR	0	'FROM->TO'	G11_054	'CIMARRON - DRAPER LAKE 345KV CKT 1'	717	0.211	102.77	'GEN335546 3-DOW COGEN'
13WP	00NR	0	'FROM->TO'	G11_054	'CIMARRON - DRAPER LAKE 345KV CKT 1'	717	0.211	102.77	'GEN337124 5-LS POWER BATESVILLE'
13WP	00NR	0	'FROM->TO'	G11_054	'CIMARRON - DRAPER LAKE 345KV CKT 1'	717	0.211	102.76	'GEN318008 3-5MOSEL161 161.00'
13WP	00NR	0	'FROM->TO'	G11_054	'CIMARRON - DRAPER LAKE 345KV CKT 1'	717	0.211	102.75	'A059'
13WP	00NR	0	'FROM->TO'	G11_054	'CIMARRON - DRAPER LAKE 345KV CKT 1'	717	0.211	102.75	'EUREKA SPRIN'
13WP	00NR	0	'FROM->TO'	G11_054	'CIMARRON - DRAPER LAKE 345KV CKT 1'	717	0.211	102.74	'GEN336176 1-UNION CARBIDE COGEN GT1'
13WP	00NR	0	'FROM->TO'	G11_054	'CIMARRON - DRAPER LAKE 345KV CKT 1'	717	0.211	102.74	'GEN336177 1-UNION CARBIDE COGEN GT2'
13WP	00NR	0	'FROM->TO'	G11_054	'CIMARRON - DRAPER LAKE 345KV CKT 1'	717	0.211	102.71	'GEN509409 1-WILKES #3'
13WP	00NR	0	'FROM->TO'	G11_054	'CIMARRON - DRAPER LAKE 345KV CKT 1'	717	0.211	102.70	'CELE-WELLOP1'
13WP	00NR	0	'FROM->TO'	G11_054	'CIMARRON - DRAPER LAKE 345KV CKT 1'	717	0.211	102.65	'GEN300003 1-THOMAS HILL UNIT 3'
13WP	00NR	0	'FROM->TO'	G11_054	'CIMARRON - DRAPER LAKE 345KV CKT 1'	717	0.211	102.23	'BASE CASE'
13WP	00NR	0	'FROM->TO'	G11_054	'CIMARRON - DRAPER LAKE 345KV CKT 1'	717	0.211	101.81	'RENO COUNTY - WICHITA 345KV CKT 1'
13WP	00NR	0	'FROM->TO'	G11_054	'CIMARRON - DRAPER LAKE 345KV CKT 1'	717	0.211	101.76	'GEN532663 1-LAWRENCE ENERGY CENTER UNIT 5'
13WP	00NR	0	'FROM->TO'	G11_054	'CIMARRON - DRAPER LAKE 345KV CKT 1'	717	0.211	101.73	'GEN542956 2-LACYGNE UNIT #2'
13WP	00NR	0	'FROM->TO'	G11_054	'CIMARRON - DRAPER LAKE 345KV CKT 1'	717	0.211	101.71	'GEN542955 1-LACYGNE UNIT #1'
13WP	00NR	0	'FROM->TO'	G11_054	'CIMARRON - DRAPER LAKE 345KV CKT 1'	717	0.211	101.69	'NELSON - RICHARD 500KV CKT 1'
13WP	00NR	0	'FROM->TO'	G11_054	'CIMARRON - DRAPER LAKE 345KV CKT 1'	717	0.211	101.64	'DRAPER LAKE - DRPCAPS4 138.00 138KV CKT 1'
13WP	00NR	0	'FROM->TO'	G11_054	'CIMARRON - DRAPER LAKE 345KV CKT 1'	717	0.211	101.50	'GEN523462 1-BLACKHAWK GEN #2'
13WP	00NR	0	'FROM->TO'	G11_054	'CIMARRON - DRAPER LAKE 345KV CKT 1'	717	0.211	101.50	'GEN523461 1-BLACKHAWK GEN #1'
13WP	00NR	0	'FROM->TO'	G11_054	'CIMARRON - DRAPER LAKE 345KV CKT 1'	717	0.211	101.28	'GEN527165 1-Mustang Gen #5'
13WP	00NR	0	'FROM->TO'	G11_054	'CIMARRON - DRAPER LAKE 345KV CKT 1'	717	0.211	101.28	'GEN527164 1-MUSTANG GEN #4 22 KV'
13WP	00NR	0	'FROM->TO'	G11_054	'CIMARRON - DRAPER LAKE 345KV CKT 1'	717	0.211	101.27	'GEN532653 1-JEFFREY ENERGY CENTER UNIT 3'
13WP	00NR	0	'FROM->TO'	G11_054	'CIMARRON - DRAPER LAKE 345KV CKT 1'	717	0.211	101.26	'GEN527901 1-HOBBS PLANT #1 (CT)'
13WP	00NR	0	'FROM->TO'	G11_054	'CIMARRON - DRAPER LAKE 345KV CKT 1'	717	0.211	101.26	'GEN527902 1-HOBBS PLANT #2 (CT)'
13WP	00NR	0	'FROM->TO'	G11_054	'CIMARRON - DRAPER LAKE 345KV CKT 1'	717	0.211	101.25	'GEN532651 1-JEFFREY ENERGY CENTER UNIT 1'
13WP	00NR	0	'FROM->TO'	G11_054	'CIMARRON - DRAPER LAKE 345KV CKT 1'	717	0.211	101.23	'GEN532652 1-JEFFREY ENERGY CENTER UNIT 2'
13WP	00NR	0	'FROM->TO'	G11_054	'CIMARRON - DRAPER LAKE 345KV CKT 1'	717	0.211	101.22	'GEN527163 1-MUSTANG GEN #3 22 KV'
13WP	00NR	0	'FROM->TO'	G11_054	'CIMARRON - DRAPER LAKE 345KV CKT 1'	717	0.211	101.20	'GEN527161 1-MUSTANG GEN #1'
13WP	00NR	0	'FROM->TO'	G11_054	'CIMARRON - DRAPER LAKE 345KV CKT 1'	717	0.211	101.19	'GEN527162 1-MUSTANG GEN #2'

SEASON	GROUP	SCENARIO	DIRECTION	SOURCE	MONITORED ELEMENT	RATE B (MVA)	TDF	(%MVA) LOADING	CONTINGENCY
13WP	00NR	0	'FROM->TO'	G11_054	'CIMARRON - DRAPER LAKE 345KV CKT 1'	717	0.211	101.13	'GEN520997 1-MORLND2'
13WP	00NR	0	'FROM->TO'	G11_054	'CIMARRON - DRAPER LAKE 345KV CKT 1'	717	0.211	101.06	'GEN520998 1-MORLND3'
13WP	00NR	0	'FROM->TO'	G11_054	'CIMARRON - DRAPER LAKE 345KV CKT 1'	717	0.211	101.03	'GEN527903 1-HOBBS PLANT #3 (ST)'
13WP	00NR	0	'FROM->TO'	G11_054	'CIMARRON - DRAPER LAKE 345KV CKT 1'	717	0.211	100.80	'GEN526333 1-JONES GEN #3 21 KV'
13WP	00NR	0	'FROM->TO'	G11_054	'CIMARRON - DRAPER LAKE 345KV CKT 1'	717	0.211	100.80	'GEN526334 1-JONES_4 116.500'
13WP	00NR	0	'FROM->TO'	G11_054	'CIMARRON - DRAPER LAKE 345KV CKT 1'	717	0.211	100.43	'GEN531447 1-HOLCOMB GENERATOR'
13WP	00NR	0	'FROM->TO'	G11_054	'CIMARRON - DRAPER LAKE 345KV CKT 1'	717	0.211	100.34	'GEN514805 1-SOONER UNIT 1'
13WP	00NR	0	'FROM->TO'	G11_054	'CIMARRON - DRAPER LAKE 345KV CKT 1'	717	0.211	100.06	'GEN525561 1-TOLK GEN #1 24 KV'
13WP	00NR	0	'FROM->TO'	G11_054	'CIMARRON - DRAPER LAKE 345KV CKT 1'	717	0.211	100.00	'GEN514806 1-SOONER UNIT 2'
13WP	00NR	0	'FROM->TO'	G11_054	'CIMARRON - DRAPER LAKE 345KV CKT 1'	717	0.211	102.93	'WEBRE - WELLS 500KV CKT 1'
13WP	00NR	0	'FROM->TO'	G11_054	'CIMARRON - DRAPER LAKE 345KV CKT 1'	717	0.211	103.07	'HOLLYWOOD - PLEASANT VALLEY 138KV CKT 1'
13WP	00NR	0	'FROM->TO'	G11_054	'CIMARRON - DRAPER LAKE 345KV CKT 1'	717	0.211	103.03	'DOLET HILLS - SOUTHWEST SHREVEPORT 345KV CKT 1'
13WP	00NR	0	'FROM->TO'	G11_054	'CIMARRON - DRAPER LAKE 345KV CKT 1'	717	0.211	102.95	'MARSHALL - WOODRING 138KV CKT 1'
13WP	00NR	0	'FROM->TO'	G11_054	'CIMARRON - DRAPER LAKE 345KV CKT 1'	717	0.211	102.95	'COTTONWOOD CREEK - MARSHALL 138KV CKT 1'
13WP	00NR	0	'FROM->TO'	G11_054	'CIMARRON - DRAPER LAKE 345KV CKT 1'	717	0.211	101.63	'LEBROCK - TENASKA RUSK COUNTY 345KV CKT 1'
13WP	00NR	0	'FROM->TO'	G11_054	'CIMARRON - DRAPER LAKE 345KV CKT 1'	717	0.211	101.63	'CROCKETT - TENASKA RUSK COUNTY 345KV CKT 1'
13WP	00NR	0	'FROM->TO'	G11_054	'CIMARRON - DRAPER LAKE 345KV CKT 1'	717	0.211	101.43	'DOLET HILLS 345/230KV TRANSFORMER CKT 1'
13WP	00NR	0	'FROM->TO'	G11_054	'CIMARRON - DRAPER LAKE 345KV CKT 1'	717	0.211	101.58	'WELSH - WILKES 345KV CKT 1'
13WP	00NR	0	'FROM->TO'	G11_054	'CIMARRON - DRAPER LAKE 345KV CKT 1'	717	0.211	101.77	'CROCKETT - GRIMES 345KV CKT 1'
13WP	00NR	0	'FROM->TO'	G11_054	'CIMARRON - DRAPER LAKE 345KV CKT 1'	717	0.211	102.98	'ELDORADO EHV - SHERIDAN EHV 500KV CKT 1'
13WP	00NR	0	'FROM->TO'	G11_054	'CIMARRON - DRAPER LAKE 345KV CKT 1'	717	0.211	101.47	'SPP-AEPW-04'
13WP	00NR	0	'FROM->TO'	G11_054	'CIMARRON - DRAPER LAKE 345KV CKT 1'	717	0.211	101.26	'NORTHWEST TEXARKANA - VALLIANT 345KV CKT 1'
13WP	00NR	0	'FROM->TO'	G11_054	'CIMARRON - DRAPER LAKE 345KV CKT 1'	717	0.211	100.96	'DRAPER LAKE - SOONER TAP 138KV CKT 1'
13WP	00NR	0	'FROM->TO'	G11_054	'CIMARRON - DRAPER LAKE 345KV CKT 1'	717	0.211	103.98	'OGE3TERM47'
13WP	00NR	0	'FROM->TO'	G11_054	'CIMARRON - DRAPER LAKE 345KV CKT 1'	717	0.211	100.95	'OGE3TERM22'
13WP	00NR	0	'FROM->TO'	G11_054	'CIMARRON - DRAPER LAKE 345KV CKT 1'	717	0.211	103.95	'LAWTON EASTSIDE - OKLAUNION 345KV CKT 1'
13WP	00NR	0	'FROM->TO'	G11_054	'CIMARRON - DRAPER LAKE 345KV CKT 1'	717	0.211	103.23	'G05-15T 345.00 - OKLAUNION 345KV CKT 1'
13WP	00NR	0	'FROM->TO'	G11_054	'CIMARRON - DRAPER LAKE 345KV CKT 1'	717	0.211	103.13	'G05-15T 345.00 - TUCO INTERCHANGE 345KV CKT 1'
13WP	00NR	0	'FROM->TO'	G11_054	'CIMARRON - DRAPER LAKE 345KV CKT 1'	717	0.211	101.12	'LYDIA - WELSH 345KV CKT 1'
13WP	00NR	0	'FROM->TO'	G11_054	'CIMARRON - DRAPER LAKE 345KV CKT 1'	717	0.211	103.30	'A222'
13WP	00NR	0	'FROM->TO'	G11_054	'CIMARRON - DRAPER LAKE 345KV CKT 1'	717	0.211	103.30	'7SAREPT 345.00 - ELDORADO EHV 345KV CKT 1'
13WP	00NR	0	'FROM->TO'	G11_054	'CIMARRON - DRAPER LAKE 345KV CKT 1'	717	0.211	103.28	'ELDORADO EHV 500/345KV TRANSFORMER CKT 1'
13WP	00NR	0	'FROM->TO'	G11_054	'CIMARRON - DRAPER LAKE 345KV CKT 1'	717	0.211	103.97	'MCCLAIN - PLEASANT VALLEY 138KV CKT 1'
13WP	00NR	0	'FROM->TO'	G11_054	'CIMARRON - DRAPER LAKE 345KV CKT 1'	717	0.211	100.59	'LYDIA - VALLIANT 345KV CKT 1'
13WP	00NR	0	'FROM->TO'	G11_054	'CIMARRON - DRAPER LAKE 345KV CKT 1'	717	0.211	104.00	'ARCADIA - KAMO MEMORIAL 138KV CKT 1'
13WP	00NR	0	'FROM->TO'	G11_054	'CIMARRON - DRAPER LAKE 345KV CKT 1'	717	0.211	103.31	'7SAREPT 345.00 - LONGWOOD 345KV CKT 1'
13WP	00NR	0	'FROM->TO'	G11_054	'CIMARRON - DRAPER LAKE 345KV CKT 1'	717	0.211	102.60	'MORISNT4 138.00 - SOONER 138KV CKT 1'
13WP	00NR	0	'FROM->TO'	G11_054	'CIMARRON - DRAPER LAKE 345KV CKT 1'	717	0.211	100.20	'SPP-AEPW-01'
13WP	00NR	0	'FROM->TO'	G11_054	'CIMARRON - DRAPER LAKE 345KV CKT 1'	717	0.211	101.49	'FIXICO TAP - MAUD 138KV CKT 1'
13WP	00NR	0	'FROM->TO'	G11_054	'CIMARRON - DRAPER LAKE 345KV CKT 1'	717	0.211	102.95	'ARCADIA - OMPA-EDMOND GARBER(LAKE) 138KV CKT 1'
13WP	00NR	0	'FROM->TO'	G11_054	'CIMARRON - DRAPER LAKE 345KV CKT 1'	717	0.211	102.88	'CHITWOOD - OMPA-EDMOND GARBER(LAKE) 138KV CKT 1'
13WP	00NR	0	'FROM->TO'	G11_054	'CIMARRON - DRAPER LAKE 345KV CKT 1'	717	0.211	102.86	'CHITWOOD - JONES TAP 138KV CKT 1'
13WP	00NR	0	'FROM->TO'	G11_054	'CIMARRON - DRAPER LAKE 345KV CKT 1'	717	0.211	101.78	'FIXICO TAP - WELEETKA 138KV CKT 1'
13WP	00NR	0	'FROM->TO'	G11_054	'CIMARRON - DRAPER LAKE 345KV CKT 1'	717	0.211	103.24	'MCELROY - STILLWATER 138KV CKT 1'
13WP	00NR	0	'FROM->TO'	G11_054	'CIMARRON - DRAPER LAKE 345KV CKT 1'	717	0.211	102.99	'KINZE - MCELROY 138KV CKT 1'
13WP	00NR	0	'FROM->TO'	G11_054	'CIMARRON - DRAPER LAKE 345KV CKT 1'	717	0.211	101.54	'OGE3TERM36'
13WP	00NR	0	'FROM->TO'	G11_054	'CIMARRON - DRAPER LAKE 345KV CKT 1'	717	0.211	100.09	'FRANKLIN SW - MIDWEST TAP 138KV CKT 1'
13WP	00NR	0	'FROM->TO'	G11_054	'CIMARRON - DRAPER LAKE 345KV CKT 1'	717	0.211	103.68	'HORSESHOE LAKE - KAMO MEMORIAL 138KV CKT 1'
13WP	00NR	0	'FROM->TO'	G11_054	'CIMARRON - DRAPER LAKE 345KV CKT 1'	717	0.211	103.93	'MORISNT4 138.00 - STILLWATER 138KV CKT 1'
13WP	00NR	0	'FROM->TO'	G11_054	'CIMARRON - DRAPER LAKE 345KV CKT 1'	717	0.210	101.26	'SEMINOLE (SEMINOL2) 345/138/14.4KV TRANSFORMER CKT 1'
13WP	00NR	0	'FROM->TO'	G11_054	'CIMARRON - DRAPER LAKE 345KV CKT 1'	717	0.210	101.25	'SEMINOLE (SEMINOL1) 345/138/14.4KV TRANSFORMER CKT 1'
13WP	00NR	0	'FROM->TO'	G11_054	'CIMARRON - DRAPER LAKE 345KV CKT 1'	717	0.210	101.09	'FRANKLIN - PINK SW 138KV CKT 1'
13WP	00NR	0	'FROM->TO'	G11_054	'CIMARRON - DRAPER LAKE 345KV CKT 1'	717	0.210	100.81	'FRANKLIN - FRANKLIN SW 138KV CKT 1'
17WP	00NR	0	'FROM->TO'	G11_054	'CIMARRON - DRAPER LAKE 345KV CKT 1'	717	0.210	101.05	'GEN336821 1-GRAND GULF UNIT'
17WP	00NR	0	'FROM->TO'	G11_054	'CIMARRON - DRAPER LAKE 345KV CKT 1'	717	0.210	100.72	'GEN336153 1-WATERFORD UNIT#3'
13WP	00NR	0	'FROM->TO'	G11_054	'CIMARRON - DRAPER LAKE 345KV CKT 1'	717	0.207	103.60	'CANADIAN RIVER - MUSKOGEE 345KV CKT 1'
13WP	00NR	0	'FROM->TO'	G11_054	'CIMARRON - DRAPER LAKE 345KV CKT 1'	717	0.203	100.00	'DRAPER LAKE - SEMINOLE 345KV CKT 3'
12SP	00NR	0	'FROM->TO'	G11_054	'NORTHWEST (NORTWST2) 345/138/13.8KV TRANSFORMER CKT 1'	493	0.051	116.95	'NORTHWEST (NORTWST3) 345/138/13.8KV TRANSFORMER CKT 1'
12SP	00NR	0	'FROM->TO'	G11_054	'NORTHWEST (NORTWST2) 345/138/13.8KV TRANSFORMER CKT 1'	493	0.051	114.57	'NORTHWEST (NORTWST3) 345/138/13.8KV TRANSFORMER CKT 1'
13SP	00NR	0	'FROM->TO'	G11_054	'NORTHWEST (NORTWST2) 345/138/13.8KV TRANSFORMER CKT 1'	493	0.051	114.16	'NORTHWEST (NORTWST3) 345/138/13.8KV TRANSFORMER CKT 1'
13SP	00NR	0	'FROM->TO'	G11_054	'NORTHWEST (NORTWST2) 345/138/13.8KV TRANSFORMER CKT 1'	493	0.051	111.65	'NORTHWEST (NORTWST3) 345/138/13.8KV TRANSFORMER CKT 1'
12SP	00NR	0	'FROM->TO'	G11_054	'NORTHWEST (NORTWST3) 345/138/13.8KV TRANSFORMER CKT 1'	493	0.049	107.14	'NORTHWEST (NORTWST2) 345/138/13.8KV TRANSFORMER CKT 1'
12SP	00NR	0	'FROM->TO'	G11_054	'NORTHWEST (NORTWST3) 345/138/13.8KV TRANSFORMER CKT 1'	493	0.049	104.95	'NORTHWEST (NORTWST2) 345/138/13.8KV TRANSFORMER CKT 1'
13SP	00NR	0	'FROM->TO'	G11_054	'NORTHWEST (NORTWST3) 345/138/13.8KV TRANSFORMER CKT 1'	493	0.049	104.49	'NORTHWEST (NORTWST2) 345/138/13.8KV TRANSFORMER CKT 1'
13SP	00NR	0	'FROM->TO'	G11_054	'NORTHWEST (NORTWST3) 345/138/13.8KV TRANSFORMER CKT 1'	493	0.049	102.18	'NORTHWEST (NORTWST2) 345/138/13.8KV TRANSFORMER CKT 1'
12WP	00NR	0	'FROM->TO'	G11_054	'CIMARRON - CZECH HALL 138KV CKT 1'	382	0.047	100.76	'CIMARRON - HAYMAKER 138KV CKT 1'
13WP	00NR	0	'FROM->TO'	G11_054	'NORTHWEST (NORTWST2) 345/138/13.8KV TRANSFORMER CKT 1'	493	0.034	102.30	'NORTHWEST (NORTWST3) 345/138/13.8KV TRANSFORMER CKT 1'
12WP	00NR	0	'TO->FROM'	G11_054	'BENTON - WICHITA 345KV CKT 1'	956	0.033	111.25	'GEN532751 1-WOLF CREEK GENERATING STATION UNIT 1'
13WP	00NR	0	'TO->FROM'	G11_054	'BENTON - WICHITA 345KV CKT 1'	956	0.033	109.79	'GEN532751 1-WOLF CREEK GENERATING STATION UNIT 1'
17WP	00NR	0	'TO->FROM'	G11_054	'BENTON - WICHITA 345KV CKT 1'	956	0.031	106.16	'GEN532751 1-WOLF CREEK GENERATING STATION UNIT 1'
12G	03ALL	0		G11_054	NCONV-Iteration Limit	1792	0.018	47.07	'G11-17T 345.00 - POST ROCK 345KV CKT 1'
12G	03ALL	0		G11_054	NCONV-Iteration Limit	0	0.011	9999.00	'DBL-WICH-THI'
12G	03ALL2	0		G11_054	NCONV-Blown Up	0	0.011	9999.00	'DBL-WICH-THI'
12WP	00NR	2	'FROM->TO'	G11_054	'CIMARRON - DRAPER LAKE 345KV CKT 1'	717	0.278	119.41	'ARCADIA - NORTHWEST 345KV CKT 1'
13WP	00NR	2	'FROM->TO'	G11_054	'CIMARRON - DRAPER LAKE 345KV CKT 1'	717	0.267	124.03	'ARCADIA - NORTHWEST 345KV CKT 1'
17WP	00NR	2	'FROM->TO'	G11_054	'CIMARRON - DRAPER LAKE 345KV CKT 1'	717	0.261	110.71	'ARCADIA - NORTHWEST 345KV CKT 1'
12WP	00NR	2	'FROM->TO'	G11_054	'CIMARRON - DRAPER LAKE 345KV CKT 1'	717	0.247	105.74	'CIMARRON - NORTHWEST 345KV CKT 1'
13WP	00NR	2	'FROM->TO'	G11_054	'CIMARRON - DRAPER LAKE 345KV CKT 1'	717	0.239	109.95	'CIMARRON - NORTHWEST 345KV CKT 1'

SEASON	GROUP	SCENARIO	DIRECTION	SOURCE	MONITORED ELEMENT	RATE B (MVA)	TDF	(%MVA) LOADING	CONTINGENCY
17WP	00NR	2	'FROM->TO'	G11_054	'CIMARRON - DRAPER LAKE 345KV CKT 1'	717	0.238	100.67	'CIMARRON - NORTHWEST 345KV CKT 1'
12WP	00NR	2	'FROM->TO'	G11_054	'CIMARRON - DRAPER LAKE 345KV CKT 1'	717	0.237	105.00	'GRACEMONT - MINCO 345KV CKT 1'
12WP	00NR	2	'FROM->TO'	G11_054	'CIMARRON - DRAPER LAKE 345KV CKT 1'	717	0.237	104.62	'CIMARRON - MINCO 345KV CKT 1'
12WP	00NR	2	'FROM->TO'	G11_054	'CIMARRON - DRAPER LAKE 345KV CKT 1'	717	0.233	105.74	'MATTHEWSON 345.00 - WOODRING 345KV CKT 1'
12WP	00NR	2	'FROM->TO'	G11_054	'CIMARRON - DRAPER LAKE 345KV CKT 1'	717	0.231	123.43	'LAWTON EASTSIDE - SUNNYSIDE 345KV CKT 1'
13WP	00NR	2	'FROM->TO'	G11_054	'CIMARRON - DRAPER LAKE 345KV CKT 1'	717	0.229	109.45	'GRACEMONT - MINCO 345KV CKT 1'
13WP	00NR	2	'FROM->TO'	G11_054	'CIMARRON - DRAPER LAKE 345KV CKT 1'	717	0.229	108.96	'CIMARRON - MINCO 345KV CKT 1'
17WP	00NR	2	'FROM->TO'	G11_054	'CIMARRON - DRAPER LAKE 345KV CKT 1'	717	0.228	101.22	'GRACEMONT - MINCO 345KV CKT 1'
17WP	00NR	2	'FROM->TO'	G11_054	'CIMARRON - DRAPER LAKE 345KV CKT 1'	717	0.228	100.67	'CIMARRON - MINCO 345KV CKT 1'
12WP	00NR	2	'FROM->TO'	G11_054	'CIMARRON - DRAPER LAKE 345KV CKT 1'	717	0.227	104.33	'NORTHWEST - SPRING CREEK 345KV CKT 1'
12WP	00NR	2	'FROM->TO'	G11_054	'CIMARRON - DRAPER LAKE 345KV CKT 1'	717	0.227	104.29	'SOONER - SPRING CREEK 345KV CKT 1'
12G	01NR	2	'FROM->TO'	G11_054	'CIMARRON - DRAPER LAKE 345KV CKT 1'	717	0.226	100.94	'LAWTON EASTSIDE - SUNNYSIDE 345KV CKT 1'
12WP	00NR	2	'FROM->TO'	G11_054	'CIMARRON - DRAPER LAKE 345KV CKT 1'	717	0.226	112.19	'MATTHEWSON 345.00 - NORTHWEST 345KV CKT 1'
12WP	00NR	2	'FROM->TO'	G11_054	'CIMARRON - DRAPER LAKE 345KV CKT 1'	717	0.226	109.29	'CIMARRON (CIMARON1) 345/138/13.8KV TRANSFORMER CKT 1'
12WP	00NR	2	'FROM->TO'	G11_054	'CIMARRON - DRAPER LAKE 345KV CKT 1'	717	0.225	109.07	'CIMARRON (CIMARON2) 345/138/13.8KV TRANSFORMER CKT 1'
12WP	00NR	2	'FROM->TO'	G11_054	'CIMARRON - DRAPER LAKE 345KV CKT 1'	717	0.225	114.69	'ARCADIA - HORSESHOE LAKE 345KV CKT 1'
12WP	00NR	2	'FROM->TO'	G11_054	'CIMARRON - DRAPER LAKE 345KV CKT 1'	717	0.225	114.68	'HORSESHOE LAKE - SEMINOLE 345KV CKT 1'
13WP	00NR	2	'FROM->TO'	G11_054	'CIMARRON - DRAPER LAKE 345KV CKT 1'	717	0.225	109.68	'MATTHEWSON 345.00 - WOODRING 345KV CKT 1'
12WP	00NR	2	'FROM->TO'	G11_054	'CIMARRON - DRAPER LAKE 345KV CKT 1'	717	0.223	109.60	'CIMARRON - SARA 138KV CKT 1'
12WP	00NR	2	'FROM->TO'	G11_054	'CIMARRON - DRAPER LAKE 345KV CKT 1'	717	0.223	108.36	'MCCLAIN - SARA 138KV CKT 1'
12WP	00NR	2	'FROM->TO'	G11_054	'CIMARRON - DRAPER LAKE 345KV CKT 1'	717	0.223	104.95	'SOONER - WOODRING 345KV CKT 1'
13WP	00NR	2	'FROM->TO'	G11_054	'CIMARRON - DRAPER LAKE 345KV CKT 1'	717	0.223	127.80	'LAWTON EASTSIDE - SUNNYSIDE 345KV CKT 1'
12WP	00NR	2	'FROM->TO'	G11_054	'CIMARRON - DRAPER LAKE 345KV CKT 1'	717	0.223	114.88	'CLEVELAND - SOONER 345KV CKT 1'
17WP	00NR	2	'FROM->TO'	G11_054	'CIMARRON - DRAPER LAKE 345KV CKT 1'	717	0.223	100.11	'MATTHEWSON 345.00 - WOODRING 345KV CKT 1'
12WP	00NR	2	'FROM->TO'	G11_054	'CIMARRON - DRAPER LAKE 345KV CKT 1'	717	0.222	108.21	'CIMARRON - CZECH HALL 138KV CKT 1'
12WP	00NR	2	'FROM->TO'	G11_054	'CIMARRON - DRAPER LAKE 345KV CKT 1'	717	0.222	107.82	'CZECH HALL - XEROX 138KV CKT 1'
12WP	00NR	2	'FROM->TO'	G11_054	'CIMARRON - DRAPER LAKE 345KV CKT 1'	717	0.222	107.80	'MORGAN - XEROX 138KV CKT 1'
12WP	00NR	2	'FROM->TO'	G11_054	'CIMARRON - DRAPER LAKE 345KV CKT 1'	717	0.222	107.69	'MORGAN - MUSTANG 138KV CKT 1'
12WP	00NR	2	'FROM->TO'	G11_054	'CIMARRON - DRAPER LAKE 345KV CKT 1'	717	0.222	102.63	'PECAN CREEK - RIVERSIDE STATION 345KV CKT 1'
12WP	00NR	2	'FROM->TO'	G11_054	'CIMARRON - DRAPER LAKE 345KV CKT 1'	717	0.221	109.89	'CLEVELAND - TULSA NORTH 345KV CKT 1'
12WP	00NR	2	'FROM->TO'	G11_054	'CIMARRON - DRAPER LAKE 345KV CKT 1'	717	0.221	103.88	'JOHNSON COUNTY - PITTSBURG 345KV CKT 1'
12WP	00NR	2	'FROM->TO'	G11_054	'CIMARRON - DRAPER LAKE 345KV CKT 1'	717	0.221	105.49	'JOHNSON COUNTY - SUNNYSIDE 345KV CKT 1'
12WP	00NR	2	'FROM->TO'	G11_054	'CIMARRON - DRAPER LAKE 345KV CKT 1'	717	0.220	103.70	'CLARKSVILLE - ONETA 345KV CKT 1'
17WP	00NR	2	'FROM->TO'	G11_054	'CIMARRON - DRAPER LAKE 345KV CKT 1'	717	0.220	115.56	'LAWTON EASTSIDE - SUNNYSIDE 345KV CKT 1'
12WP	00NR	2	'FROM->TO'	G11_054	'CIMARRON - DRAPER LAKE 345KV CKT 1'	717	0.220	106.08	'REDBUD - RIVERSIDE STATION 345KV CKT 1'
12WP	00NR	2	'FROM->TO'	G11_054	'CIMARRON - DRAPER LAKE 345KV CKT 1'	717	0.220	102.29	'HOLLYWOOD - MIDWEST TAP 138KV CKT 1'
13WP	00NR	2	'FROM->TO'	G11_054	'CIMARRON - DRAPER LAKE 345KV CKT 1'	717	0.220	103.50	'CIMARRON - MATTHEWSON 345.00 345KV CKT 1'
12WP	00NR	2	'FROM->TO'	G11_054	'CIMARRON - DRAPER LAKE 345KV CKT 1'	717	0.220	104.80	'CIMARRON - HAYMAKER 138KV CKT 1'
12WP	00NR	2	'FROM->TO'	G11_054	'CIMARRON - DRAPER LAKE 345KV CKT 1'	717	0.220	104.67	'DIVISION AVE - HAYMAKER 138KV CKT 1'
17WP	00NR	2	'FROM->TO'	G11_054	'CIMARRON - DRAPER LAKE 345KV CKT 1'	717	0.220	101.72	'CIMARRON - SARA 138KV CKT 1'
17WP	00NR	2	'FROM->TO'	G11_054	'CIMARRON - DRAPER LAKE 345KV CKT 1'	717	0.220	100.37	'MCCLAIN - SARA 138KV CKT 1'
12WP	00NR	2	'FROM->TO'	G11_054	'CIMARRON - DRAPER LAKE 345KV CKT 1'	717	0.220	101.72	'OAKCREEK - WILD MARY 138KV CKT 1'
12WP	00NR	2	'FROM->TO'	G11_054	'CIMARRON - DRAPER LAKE 345KV CKT 1'	717	0.220	101.44	'AIRDEPT4 138.00 - WILD MARY 138KV CKT 1'
12WP	00NR	2	'FROM->TO'	G11_054	'CIMARRON - DRAPER LAKE 345KV CKT 1'	717	0.220	101.43	'AIRDEPT4 138.00 - GM 138KV CKT 1'
12WP	00NR	2	'FROM->TO'	G11_054	'CIMARRON - DRAPER LAKE 345KV CKT 1'	717	0.220	101.18	'DRAPER LAKE - GM 138KV CKT 1'
12WP	00NR	2	'FROM->TO'	G11_054	'CIMARRON - DRAPER LAKE 345KV CKT 1'	717	0.220	104.36	'BLANCHARD - CORNVILLE 138KV CKT 1'
12WP	00NR	2	'FROM->TO'	G11_054	'CIMARRON - DRAPER LAKE 345KV CKT 1'	717	0.220	104.16	'BLANCHARD - MAUD 138KV CKT 1'
12WP	00NR	2	'FROM->TO'	G11_054	'CIMARRON - DRAPER LAKE 345KV CKT 1'	717	0.220	104.72	'36 & MERIDIAN - PENNSYLVANIA 138KV CKT 1'
12WP	00NR	2	'FROM->TO'	G11_054	'CIMARRON - DRAPER LAKE 345KV CKT 1'	717	0.220	104.14	'GRACEMONT (BANK 1) 345/138/13.8KV TRANSFORMER CKT 1'
12WP	00NR	2	'FROM->TO'	G11_054	'CIMARRON - DRAPER LAKE 345KV CKT 1'	717	0.220	104.34	'MCCLAIN - PLEASANT VALLEY 138KV CKT 1'
12WP	00NR	2	'FROM->TO'	G11_054	'CIMARRON - DRAPER LAKE 345KV CKT 1'	717	0.220	104.39	'CLASSEN - ROBINSON 138KV CKT 1'
12WP	00NR	2	'FROM->TO'	G11_054	'CIMARRON - DRAPER LAKE 345KV CKT 1'	717	0.220	104.10	'LIGHTNING CREEK - ROBINSON 138KV CKT 1'
12WP	00NR	2	'FROM->TO'	G11_054	'CIMARRON - DRAPER LAKE 345KV CKT 1'	717	0.220	103.95	'LIGHTNING CREEK - TROSPER 138KV CKT 1'
12WP	00NR	2	'FROM->TO'	G11_054	'CIMARRON - DRAPER LAKE 345KV CKT 1'	717	0.219	104.43	'KETCH TAP - NORTHWEST 138KV CKT 1'
12WP	00NR	2	'FROM->TO'	G11_054	'CIMARRON - DRAPER LAKE 345KV CKT 1'	717	0.219	107.02	'NORTHWEST (NORTWST2) 345/138/13.8KV TRANSFORMER CKT 1'
12WP	00NR	2	'FROM->TO'	G11_054	'CIMARRON - DRAPER LAKE 345KV CKT 1'	717	0.219	104.70	'QUAIL CREEK - SKYLINE 138KV CKT 1'
12WP	00NR	2	'FROM->TO'	G11_054	'CIMARRON - DRAPER LAKE 345KV CKT 1'	717	0.219	102.75	'FOREST HILL - SQUIRL CREEK 138KV CKT 1'
12WP	00NR	2	'FROM->TO'	G11_054	'CIMARRON - DRAPER LAKE 345KV CKT 1'	717	0.219	102.38	'FOREST HILL - MAUD 138KV CKT 1'
12WP	00NR	2	'FROM->TO'	G11_054	'CIMARRON - DRAPER LAKE 345KV CKT 1'	717	0.219	102.30	'G08-13T 345.00 - SUMNERCO 345.00 345KV CKT 1'
12WP	00NR	2	'FROM->TO'	G11_054	'CIMARRON - DRAPER LAKE 345KV CKT 1'	717	0.219	102.15	'G08-13T 345.00 - WOODRING 345KV CKT 1'
12WP	00NR	2	'FROM->TO'	G11_054	'CIMARRON - DRAPER LAKE 345KV CKT 1'	717	0.219	106.23	'NORTHWEST (NORTWST3) 345/138/13.8KV TRANSFORMER CKT 1'
12WP	00NR	2	'FROM->TO'	G11_054	'CIMARRON - DRAPER LAKE 345KV CKT 1'	717	0.219	105.14	'HORSESHOE LAKE - JONES TAP 138KV CKT 1'
12WP	00NR	2	'FROM->TO'	G11_054	'CIMARRON - DRAPER LAKE 345KV CKT 1'	717	0.219	104.64	'SUNSHINE CANYON - WESTMOORE 138KV CKT 1'
12WP	00NR	2	'FROM->TO'	G11_054	'CIMARRON - DRAPER LAKE 345KV CKT 1'	717	0.219	104.00	'FRANKLIN SW - WESTMOORE 138KV CKT 1'
12WP	00NR	2	'FROM->TO'	G11_054	'CIMARRON - DRAPER LAKE 345KV CKT 1'	717	0.219	104.86	'NORTHEAST STATION - ONETA 345KV CKT 1'
12WP	00NR	2	'FROM->TO'	G11_054	'CIMARRON - DRAPER LAKE 345KV CKT 1'	717	0.219	106.80	'CANEYRV7 345.00 - NEOSHO 345KV CKT 1'
12WP	00NR	2	'FROM->TO'	G11_054	'CIMARRON - DRAPER LAKE 345KV CKT 1'	717	0.219	106.62	'CANEYRV7 345.00 - LATHAMS7 345.00 345KV CKT 1'
12WP	00NR	2	'FROM->TO'	G11_054	'CIMARRON - DRAPER LAKE 345KV CKT 1'	717	0.219	106.11	'LATHAMS7 345.00 - ROSE HILL 345KV CKT 1'
12WP	00NR	2	'FROM->TO'	G11_054	'CIMARRON - DRAPER LAKE 345KV CKT 1'	717	0.219	102.66	'MUSKOGEE - PECAN CREEK 345KV CKT 2'
12WP	00NR	2	'FROM->TO'	G11_054	'CIMARRON - DRAPER LAKE 345KV CKT 1'	717	0.219	102.14	'MAUD - SEMINOLE 138KV CKT 1'
12WP	00NR	2	'FROM->TO'	G11_054	'CIMARRON - DRAPER LAKE 345KV CKT 1'	717	0.219	104.44	'DIVISION AVE - LAKESIDE 138KV CKT 1'
12WP	00NR	2	'FROM->TO'	G11_054	'CIMARRON - DRAPER LAKE 345KV CKT 1'	717	0.219	104.31	'HEFNER - LAKESIDE 138KV CKT 1'
12WP	00NR	2	'FROM->TO'	G11_054	'CIMARRON - DRAPER LAKE 345KV CKT 1'	717	0.219	104.80	'MEMORIAL - SKYLINE 138KV CKT 1'
12WP	00NR	2	'FROM->TO'	G11_054	'CIMARRON - DRAPER LAKE 345KV CKT 1'	717	0.219	103.74	'WOODRING (WOODRNG2) 345/138/13.8KV TRANSFORMER CKT 1'
12WP	00NR	2	'FROM->TO'	G11_054	'CIMARRON - DRAPER LAKE 345KV CKT 1'	717	0.219	102.21	'DELAWARE - NORTHEAST STATION 345KV CKT 1'
12WP	00NR	2	'FROM->TO'	G11_054	'CIMARRON - DRAPER LAKE 345KV CKT 1'	717	0.219	100.23	'DRAPER LAKE (DRAPER2) 345/138/13.8KV TRANSFORMER CKT 1'
12WP	00NR	2	'FROM->TO'	G11_054	'CIMARRON - DRAPER LAKE 345KV CKT 1'	717	0.219	100.00	'DRAPER LAKE (DRAPER3) 345/138/13.8KV TRANSFORMER CKT 1'
12WP	00NR	2	'FROM->TO'	G11_054	'CIMARRON - DRAPER LAKE 345KV CKT 1'	717	0.219	100.00	'DRAPER LAKE (DRAPER4) 345/138/13.8KV TRANSFORMER CKT 1'

SEASON	GROUP	SCENARIO	DIRECTION	SOURCE	MONITORED ELEMENT	RATE B (MVA)	TDF	(%MVA) LOADING	CONTINGENCY
12WP	00NR	2	'FROM->TO'	G11_054	'CIMARRON - DRAPER LAKE 345KV CKT 1'	717	0.219	106.34	'ANADARKO - POCASSETT 138KV CKT 1'
12WP	00NR	2	'FROM->TO'	G11_054	'CIMARRON - DRAPER LAKE 345KV CKT 1'	717	0.219	106.17	'POCASSETT - TUTTLE 138KV CKT 1'
12WP	00NR	2	'FROM->TO'	G11_054	'CIMARRON - DRAPER LAKE 345KV CKT 1'	717	0.219	105.73	'SUNSHINE CANYON - TUTTLE 138KV CKT 1'
12WP	00NR	2	'FROM->TO'	G11_054	'CIMARRON - DRAPER LAKE 345KV CKT 1'	717	0.219	104.51	'THISTLE 7 345.00 - WOODWARD DISTRICT EHV 345KV CKT 1'
12WP	00NR	2	'FROM->TO'	G11_054	'CIMARRON - DRAPER LAKE 345KV CKT 1'	717	0.219	104.51	'THISTLE 7 345.00 - WOODWARD DISTRICT EHV 345KV CKT 2'
12WP	00NR	2	'FROM->TO'	G11_054	'CIMARRON - DRAPER LAKE 345KV CKT 1'	717	0.219	104.61	'HUGO - SUNNYSIDE 345KV CKT 1'
12WP	00NR	2	'FROM->TO'	G11_054	'CIMARRON - DRAPER LAKE 345KV CKT 1'	717	0.219	100.95	'CHAMBER SPRINGS - CLARKSVILLE 345KV CKT 1'
12WP	00NR	2	'FROM->TO'	G11_054	'CIMARRON - DRAPER LAKE 345KV CKT 1'	717	0.219	103.96	'CIVIT - PAOLI 138KV CKT 1'
12WP	00NR	2	'FROM->TO'	G11_054	'CIMARRON - DRAPER LAKE 345KV CKT 1'	717	0.219	103.91	'CIVIT - STRATFORD 138KV CKT 1'
12WP	00NR	2	'FROM->TO'	G11_054	'CIMARRON - DRAPER LAKE 345KV CKT 1'	717	0.219	103.86	'OIL CENTER - STRATFORD 138KV CKT 1'
12WP	00NR	2	'FROM->TO'	G11_054	'CIMARRON - DRAPER LAKE 345KV CKT 1'	717	0.219	103.79	'LATTA JCT - OIL CENTER 138KV CKT 1'
12WP	00NR	2	'FROM->TO'	G11_054	'CIMARRON - DRAPER LAKE 345KV CKT 1'	717	0.219	103.90	'DAYTON - MUSTANG 138KV CKT 1'
12WP	00NR	2	'FROM->TO'	G11_054	'CIMARRON - DRAPER LAKE 345KV CKT 1'	717	0.219	103.89	'DAYTON - HOBBY LOBBY 138KV CKT 1'
12WP	00NR	2	'FROM->TO'	G11_054	'CIMARRON - DRAPER LAKE 345KV CKT 1'	717	0.219	103.88	'HAMMETT TAP - HORSESHOE LAKE 138KV CKT 1'
12WP	00NR	2	'FROM->TO'	G11_054	'CIMARRON - DRAPER LAKE 345KV CKT 1'	717	0.219	103.84	'36 & MERIDIAN - HOBBY LOBBY 138KV CKT 1'
12WP	00NR	2	'FROM->TO'	G11_054	'CIMARRON - DRAPER LAKE 345KV CKT 1'	717	0.219	104.63	'CORN TAP - PAOLI 138KV CKT 1'
13WP	00NR	2	'FROM->TO'	G11_054	'CIMARRON - DRAPER LAKE 345KV CKT 1'	717	0.219	113.23	'CIMARRON (CIMARON1) 345/138/13.8KV TRANSFORMER CKT 1'
12WP	00NR	2	'FROM->TO'	G11_054	'CIMARRON - DRAPER LAKE 345KV CKT 1'	717	0.219	103.71	'SAPULPA ROAD - WEKIWA 345KV CKT 1'
12WP	00NR	2	'FROM->TO'	G11_054	'CIMARRON - DRAPER LAKE 345KV CKT 1'	717	0.218	103.66	'CHERRY CREEK - PLEASANT VALLEY 138KV CKT 1'
12WP	00NR	2	'FROM->TO'	G11_054	'CIMARRON - DRAPER LAKE 345KV CKT 1'	717	0.218	104.31	'TULSA NORTH - WEKIWA 345KV CKT 1'
13WP	00NR	2	'FROM->TO'	G11_054	'CIMARRON - DRAPER LAKE 345KV CKT 1'	717	0.218	104.10	'CIMARRON - MATTHEWSON 345.00 345KV CKT 2'
12WP	00NR	2	'FROM->TO'	G11_054	'CIMARRON - DRAPER LAKE 345KV CKT 1'	717	0.218	102.79	'PAOLI - SEMINOLE 138KV CKT 1'
13WP	00NR	2	'FROM->TO'	G11_054	'CIMARRON - DRAPER LAKE 345KV CKT 1'	717	0.218	113.01	'CIMARRON - SARA 138KV CKT 1'
13WP	00NR	2	'FROM->TO'	G11_054	'CIMARRON - DRAPER LAKE 345KV CKT 1'	717	0.218	111.75	'MCCLAIN - SARA 138KV CKT 1'
12WP	00NR	2	'FROM->TO'	G11_054	'CIMARRON - DRAPER LAKE 345KV CKT 1'	717	0.218	103.73	'HEALDTON - LOCO 138KV CKT 1'
12WP	00NR	2	'FROM->TO'	G11_054	'CIMARRON - DRAPER LAKE 345KV CKT 1'	717	0.218	102.71	'MAUD - SEMINOLE 138KV CKT 2'
12WP	00NR	2	'FROM->TO'	G11_054	'CIMARRON - DRAPER LAKE 345KV CKT 1'	717	0.218	103.81	'BEAVER CO 345.00 - GRAY CO 345.00 345KV CKT 1'
12WP	00NR	2	'FROM->TO'	G11_054	'CIMARRON - DRAPER LAKE 345KV CKT 1'	717	0.218	101.30	'FT SMITH - MUSKOGEE 345KV CKT 1'
12WP	00NR	2	'FROM->TO'	G11_054	'CIMARRON - DRAPER LAKE 345KV CKT 1'	717	0.218	104.31	'LONEOAK - NORTHWEST 138KV CKT 1'
12WP	00NR	2	'FROM->TO'	G11_054	'CIMARRON - DRAPER LAKE 345KV CKT 1'	717	0.218	104.19	'HUGO - VALLIANT 345KV CKT 1'
12WP	00NR	2	'FROM->TO'	G11_054	'CIMARRON - DRAPER LAKE 345KV CKT 1'	717	0.218	103.99	'LONEOAK - QUAIL CREEK 138KV CKT 1'
12WP	00NR	2	'FROM->TO'	G11_054	'CIMARRON - DRAPER LAKE 345KV CKT 1'	717	0.218	102.67	'ARBUCKLE - VANOSS 138KV CKT 1'
12WP	00NR	2	'FROM->TO'	G11_054	'CIMARRON - DRAPER LAKE 345KV CKT 1'	717	0.218	104.64	'MINGO - RED WILLOW 345KV CKT 1'
12WP	00NR	2	'FROM->TO'	G11_054	'CIMARRON - DRAPER LAKE 345KV CKT 1'	717	0.218	102.10	'PARK LANE - SEMINOLE 138KV CKT 1'
12WP	00NR	2	'FROM->TO'	G11_054	'CIMARRON - DRAPER LAKE 345KV CKT 1'	717	0.218	104.09	'KETCH - KETCH TAP 138KV CKT 1'
12WP	00NR	2	'FROM->TO'	G11_054	'CIMARRON - DRAPER LAKE 345KV CKT 1'	717	0.218	103.92	'ROSE HILL - SUMNERCO 345.00 345KV CKT 1'
12WP	00NR	2	'FROM->TO'	G11_054	'CIMARRON - DRAPER LAKE 345KV CKT 1'	717	0.218	103.82	'OUMED 4 - STONEWALL 138KV CKT 1'
12WP	00NR	2	'FROM->TO'	G11_054	'CIMARRON - DRAPER LAKE 345KV CKT 1'	717	0.218	103.74	'OUMED 4 - PARK PLACE 138KV CKT 1'
12WP	00NR	2	'FROM->TO'	G11_054	'CIMARRON - DRAPER LAKE 345KV CKT 1'	717	0.218	103.70	'COUNCIL - MUSTANG 138KV CKT 1'
12WP	00NR	2	'FROM->TO'	G11_054	'CIMARRON - DRAPER LAKE 345KV CKT 1'	717	0.218	101.98	'DRAPER LAKE - SOONER TAP 138KV CKT 1'
12WP	00NR	2	'FROM->TO'	G11_054	'CIMARRON - DRAPER LAKE 345KV CKT 1'	717	0.218	106.90	'ANDERSONCO 345.00 - LACYGNE 345KV CKT 1'
12WP	00NR	2	'FROM->TO'	G11_054	'CIMARRON - DRAPER LAKE 345KV CKT 1'	717	0.218	106.77	'ANDERSONCO 345.00 - WOLF CREEK 345KV CKT 1'
13WP	00NR	2	'FROM->TO'	G11_054	'CIMARRON - DRAPER LAKE 345KV CKT 1'	717	0.218	113.02	'CIMARRON (CIMARON2) 345/138/13.8KV TRANSFORMER CKT 1'
12WP	00NR	2	'FROM->TO'	G11_054	'CIMARRON - DRAPER LAKE 345KV CKT 1'	717	0.218	104.73	'LACYGNE - NEOSHO 345KV CKT 1'
12WP	00NR	2	'FROM->TO'	G11_054	'CIMARRON - DRAPER LAKE 345KV CKT 1'	717	0.218	104.09	'GRAY CO 345.00 - SPEARVILLE 345KV CKT 1'
12WP	00NR	2	'FROM->TO'	G11_054	'CIMARRON - DRAPER LAKE 345KV CKT 1'	717	0.218	104.00	'COMANCHE - LOCO 138KV CKT 1'
12WP	00NR	2	'FROM->TO'	G11_054	'CIMARRON - DRAPER LAKE 345KV CKT 1'	717	0.218	101.74	'BEAVER CO 345.00 - WOODWARD DISTRICT EHV 345KV CKT 1'
12WP	00NR	2	'FROM->TO'	G11_054	'CIMARRON - DRAPER LAKE 345KV CKT 1'	717	0.218	104.57	'MINGO - SETAB 345KV CKT 1'
12WP	00NR	2	'FROM->TO'	G11_054	'CIMARRON - DRAPER LAKE 345KV CKT 1'	717	0.218	105.23	'AXTELL - POST ROCK 345KV CKT 1'
12WP	00NR	2	'FROM->TO'	G11_054	'CIMARRON - DRAPER LAKE 345KV CKT 1'	717	0.218	104.35	'EMPORIA ENERGY CENTER - WICHITA 345KV CKT 1'
12WP	00NR	2	'FROM->TO'	G11_054	'CIMARRON - DRAPER LAKE 345KV CKT 1'	717	0.218	103.83	'FINNEY SWITCHING STATION - STEVENSCO 345.00 345KV CKT 1'
12WP	00NR	2	'FROM->TO'	G11_054	'CIMARRON - DRAPER LAKE 345KV CKT 1'	717	0.218	104.68	'THISTLE 7 345.00 - WICHITA 345KV CKT 1'
12WP	00NR	2	'FROM->TO'	G11_054	'CIMARRON - DRAPER LAKE 345KV CKT 1'	717	0.218	104.68	'THISTLE 7 345.00 - WICHITA 345KV CKT 2'
12WP	00NR	2	'FROM->TO'	G11_054	'CIMARRON - DRAPER LAKE 345KV CKT 1'	717	0.218	104.06	'BENTON - WICHITA 345KV CKT 1'
12WP	00NR	2	'FROM->TO'	G11_054	'CIMARRON - DRAPER LAKE 345KV CKT 1'	717	0.218	102.69	'SEMINOLE - VANOSS 138KV CKT 1'
12WP	00NR	2	'FROM->TO'	G11_054	'CIMARRON - DRAPER LAKE 345KV CKT 1'	717	0.218	104.17	'HOLCOMB - SETAB 345KV CKT 1'
12WP	00NR	2	'FROM->TO'	G11_054	'CIMARRON - DRAPER LAKE 345KV CKT 1'	717	0.218	103.69	'5LOCSTGV - MAID 161KV CKT 1'
12WP	00NR	2	'FROM->TO'	G11_054	'CIMARRON - DRAPER LAKE 345KV CKT 1'	717	0.218	103.68	'5CDRCRST 161.00 - 5LOCSTGV 161KV CKT 1'
12WP	00NR	2	'FROM->TO'	G11_054	'CIMARRON - DRAPER LAKE 345KV CKT 1'	717	0.218	104.30	'OVERTON-TRF'
12WP	00NR	2	'FROM->TO'	G11_054	'CIMARRON - DRAPER LAKE 345KV CKT 1'	717	0.218	103.71	'HEFNER - TULSA 138KV CKT 1'
12WP	00NR	2	'FROM->TO'	G11_054	'CIMARRON - DRAPER LAKE 345KV CKT 1'	717	0.218	105.09	'G11-17T 345.00 - POST ROCK 345KV CKT 1'
12WP	00NR	2	'FROM->TO'	G11_054	'CIMARRON - DRAPER LAKE 345KV CKT 1'	717	0.218	104.38	'7OVERTON 345.00 - SIBLEY 345KV CKT 1'
12WP	00NR	2	'FROM->TO'	G11_054	'CIMARRON - DRAPER LAKE 345KV CKT 1'	717	0.218	104.16	'DIVISION AVE - MUSTANG 138KV CKT 1'
12WP	00NR	2	'FROM->TO'	G11_054	'CIMARRON - DRAPER LAKE 345KV CKT 1'	717	0.218	103.73	'EL RENO SW - MUSTANG 69KV CKT 1'
12WP	00NR	2	'FROM->TO'	G11_054	'CIMARRON - DRAPER LAKE 345KV CKT 1'	717	0.218	102.57	'AI12'
12WP	00NR	2	'FROM->TO'	G11_054	'CIMARRON - DRAPER LAKE 345KV CKT 1'	717	0.218	102.57	'BROOKLINE - SUB 383 - MONETT 345KV CKT 1'
12WP	00NR	2	'FROM->TO'	G11_054	'CIMARRON - DRAPER LAKE 345KV CKT 1'	717	0.218	102.57	'FLINT CREEK - SUB 383 - MONETT 345KV CKT 1'
12WP	00NR	2	'FROM->TO'	G11_054	'CIMARRON - DRAPER LAKE 345KV CKT 1'	717	0.218	104.21	'SWISSVALE - WEST GARDNER 345KV CKT 1'
12WP	00NR	2	'FROM->TO'	G11_054	'CIMARRON - DRAPER LAKE 345KV CKT 1'	717	0.218	103.75	'ANADARKO - BLANCHARD 69KV CKT 1'
12WP	00NR	2	'FROM->TO'	G11_054	'CIMARRON - DRAPER LAKE 345KV CKT 1'	717	0.218	104.47	'7JASPER 345.00 - MORGAN 345KV CKT 1'
12WP	00NR	2	'FROM->TO'	G11_054	'CIMARRON - DRAPER LAKE 345KV CKT 1'	717	0.218	103.95	'HAMMETT TAP - HAMMETT2 138KV CKT 1'
12WP	00NR	2	'FROM->TO'	G11_054	'CIMARRON - DRAPER LAKE 345KV CKT 1'	717	0.218	103.93	'ANADARKO - GEORGIA 138KV CKT 1'
12WP	00NR	2	'FROM->TO'	G11_054	'CIMARRON - DRAPER LAKE 345KV CKT 1'	717	0.218	103.88	'FLETCHER - GEORGIA 138KV CKT 1'
12WP	00NR	2	'FROM->TO'	G11_054	'CIMARRON - DRAPER LAKE 345KV CKT 1'	717	0.218	103.84	'HAMMETT2 - MEEKER 138KV CKT 1'
12WP	00NR	2	'FROM->TO'	G11_054	'CIMARRON - DRAPER LAKE 345KV CKT 1'	717	0.218	103.95	'EMPORIA ENERGY CENTER - SWISSVALE 345KV CKT 1'
12WP	00NR	2	'FROM->TO'	G11_054	'CIMARRON - DRAPER LAKE 345KV CKT 1'	717	0.218	103.75	'EMPIRE - FLETCHER 138KV CKT 1'
12WP	00NR	2	'FROM->TO'	G11_054	'CIMARRON - DRAPER LAKE 345KV CKT 1'	717	0.218	103.71	'JEFFREY ENERGY CENTER - SUMMIT 345KV CKT 1'
12WP	00NR	2	'FROM->TO'	G11_054	'CIMARRON - DRAPER LAKE 345KV CKT 1'	717	0.218	103.69	'COMANCHE - EMPIRE 138KV CKT 1'

SEASON	GROUP	SCENARIO	DIRECTION	SOURCE	MONITORED ELEMENT	RATE B (MVA)	TDF	(%MVA) LOADING	CONTINGENCY
12WP	00NR	2	'FROM->TO'	G11_054	'CIMARRON - DRAPER LAKE 345KV CKT 1'	717	0.218	104.93	'WRTOD400'
12WP	00NR	2	'FROM->TO'	G11_054	'CIMARRON - DRAPER LAKE 345KV CKT 1'	717	0.218	104.72	'7JASPER 345.00 - NEOSHO 345KV CKT 1'
12WP	00NR	2	'FROM->TO'	G11_054	'CIMARRON - DRAPER LAKE 345KV CKT 1'	717	0.218	104.43	'HOYT - STRANGER CREEK 345KV CKT 1'
12WP	00NR	2	'FROM->TO'	G11_054	'CIMARRON - DRAPER LAKE 345KV CKT 1'	717	0.218	104.18	'NORTHWEST - PANTHER 138KV CKT 1'
12WP	00NR	2	'FROM->TO'	G11_054	'CIMARRON - DRAPER LAKE 345KV CKT 1'	717	0.218	104.15	'PANTHER - SILVER LAKE 138KV CKT 1'
12WP	00NR	2	'FROM->TO'	G11_054	'CIMARRON - DRAPER LAKE 345KV CKT 1'	717	0.218	104.03	'CLEVELAND (CLVAUTO1) 345/138/13.8KV TRANSFORMER CKT 1'
12WP	00NR	2	'FROM->TO'	G11_054	'CIMARRON - DRAPER LAKE 345KV CKT 1'	717	0.218	103.76	'BROOKLINE - MORGAN 345KV CKT 1'
12WP	00NR	2	'FROM->TO'	G11_054	'CIMARRON - DRAPER LAKE 345KV CKT 1'	717	0.218	102.29	'KEO EHV - WEST MEMPHIS 500 500KV CKT 1'
12WP	00NR	2	'FROM->TO'	G11_054	'CIMARRON - DRAPER LAKE 345KV CKT 1'	717	0.218	104.84	'HOYT - JEFFREY ENERGY CENTER 345KV CKT 1'
12WP	00NR	2	'FROM->TO'	G11_054	'CIMARRON - DRAPER LAKE 345KV CKT 1'	717	0.218	103.82	'RENO COUNTY - SUMMIT 345KV CKT 1'
12WP	00NR	2	'FROM->TO'	G11_054	'CIMARRON - DRAPER LAKE 345KV CKT 1'	717	0.218	102.66	'AMRN_OUTS5'
12WP	00NR	2	'FROM->TO'	G11_054	'CIMARRON - DRAPER LAKE 345KV CKT 1'	717	0.218	102.64	'ARKANSAS NUCLEAR ONE - PLEASANT HILL 500KV CKT 1'
12WP	00NR	2	'FROM->TO'	G11_054	'CIMARRON - DRAPER LAKE 345KV CKT 1'	717	0.218	102.57	'Hitchland Interchange - WOODWARD DISTRICT EHV 345KV CKT 2'
12WP	00NR	2	'FROM->TO'	G11_054	'CIMARRON - DRAPER LAKE 345KV CKT 1'	717	0.218	102.80	'ROSE HILL - WOLF CREEK 345KV CKT 1'
12WP	00NR	2	'FROM->TO'	G11_054	'CIMARRON - DRAPER LAKE 345KV CKT 1'	717	0.218	102.24	'DELL 500 - INDEPENDENCE 500KV CKT 1'
12WP	00NR	2	'FROM->TO'	G11_054	'CIMARRON - DRAPER LAKE 345KV CKT 1'	717	0.218	104.27	'GRAND ISLAND - SWEETWATER 345KV CKT 1'
12WP	00NR	2	'FROM->TO'	G11_054	'CIMARRON - DRAPER LAKE 345KV CKT 1'	717	0.218	104.02	'AXTELL - PAULINE 345KV CKT 1'
12WP	00NR	2	'FROM->TO'	G11_054	'CIMARRON - DRAPER LAKE 345KV CKT 1'	717	0.218	103.86	'MOORE - PAULINE 345KV CKT 1'
12WP	00NR	2	'FROM->TO'	G11_054	'CIMARRON - DRAPER LAKE 345KV CKT 1'	717	0.218	103.80	'NEOSHO (NEOSHO2X) 345/161/13.8KV TRANSFORMER CKT 1'
12WP	00NR	2	'FROM->TO'	G11_054	'CIMARRON - DRAPER LAKE 345KV CKT 1'	717	0.218	103.84	'CLEO CORNER - MEN TAP 138KV CKT 1'
12WP	00NR	2	'FROM->TO'	G11_054	'CIMARRON - DRAPER LAKE 345KV CKT 1'	717	0.218	103.83	'IMO TAP - MEN TAP 138KV CKT 1'
12WP	00NR	2	'FROM->TO'	G11_054	'CIMARRON - DRAPER LAKE 345KV CKT 1'	717	0.218	102.46	'BORDER 7345.00 - WOODWARD DISTRICT EHV 345KV CKT 1'
12WP	00NR	2	'FROM->TO'	G11_054	'CIMARRON - DRAPER LAKE 345KV CKT 1'	717	0.218	103.99	'AI43'
12WP	00NR	2	'FROM->TO'	G11_054	'CIMARRON - DRAPER LAKE 345KV CKT 1'	717	0.218	103.99	'7LUTESVIL 345.00 - 7ST FRANC 345.00 345KV CKT 1'
12WP	00NR	2	'FROM->TO'	G11_054	'CIMARRON - DRAPER LAKE 345KV CKT 1'	717	0.218	103.84	'CLEO CORNER - GLASS MOUNTAIN 138KV CKT 1'
12WP	00NR	2	'FROM->TO'	G11_054	'CIMARRON - DRAPER LAKE 345KV CKT 1'	717	0.218	103.82	'GLASS MOUNTAIN - MOORELAND 138KV CKT 1'
12WP	00NR	2	'FROM->TO'	G11_054	'CIMARRON - DRAPER LAKE 345KV CKT 1'	717	0.218	103.69	'AI13'
12WP	00NR	2	'FROM->TO'	G11_054	'CIMARRON - DRAPER LAKE 345KV CKT 1'	717	0.218	103.89	'CLINTON - MONTROSE 161KV CKT 1'
12WP	00NR	2	'FROM->TO'	G11_054	'CIMARRON - DRAPER LAKE 345KV CKT 1'	717	0.218	104.23	'FAIRFAX TAP - SHIDLER 138KV CKT 1'
12WP	00NR	2	'FROM->TO'	G11_054	'CIMARRON - DRAPER LAKE 345KV CKT 1'	717	0.218	104.20	'SHIDLER - WEST PAWHUSKA 138KV CKT 1'
12WP	00NR	2	'FROM->TO'	G11_054	'CIMARRON - DRAPER LAKE 345KV CKT 1'	717	0.218	104.19	'PAWHUSKA TAP - WEST PAWHUSKA 138KV CKT 1'
12WP	00NR	2	'FROM->TO'	G11_054	'CIMARRON - DRAPER LAKE 345KV CKT 1'	717	0.218	104.15	'DOMES - PAWHUSKA TAP 138KV CKT 1'
12WP	00NR	2	'FROM->TO'	G11_054	'CIMARRON - DRAPER LAKE 345KV CKT 1'	717	0.218	104.12	'DOMES - MOUND ROAD 138KV CKT 1'
12WP	00NR	2	'FROM->TO'	G11_054	'CIMARRON - DRAPER LAKE 345KV CKT 1'	717	0.218	103.68	'FRANKS - SALEM 345KV CKT 1'
12WP	00NR	2	'FROM->TO'	G11_054	'CIMARRON - DRAPER LAKE 345KV CKT 1'	717	0.218	102.65	'OSAGE - WEBB CITY TAP 138KV CKT 1'
12WP	00NR	2	'FROM->TO'	G11_054	'CIMARRON - DRAPER LAKE 345KV CKT 1'	717	0.218	102.47	'FAIRFAX TAP - WEBB CITY TAP 138KV CKT 1'
12WP	00NR	2	'FROM->TO'	G11_054	'CIMARRON - DRAPER LAKE 345KV CKT 1'	717	0.218	103.82	'ATCHSNT3 345.00 - BOONEVILLE 345KV CKT 1'
12WP	00NR	2	'FROM->TO'	G11_054	'CIMARRON - DRAPER LAKE 345KV CKT 1'	717	0.218	103.76	'ATCHSNT3 345.00 - COOPER 345KV CKT 1'
12WP	00NR	2	'FROM->TO'	G11_054	'CIMARRON - DRAPER LAKE 345KV CKT 1'	717	0.218	103.68	'ATC_B2_8E2'
12WP	00NR	2	'FROM->TO'	G11_054	'CIMARRON - DRAPER LAKE 345KV CKT 1'	717	0.218	112.24	'GEN336821 1-GRAND GULF UNIT'
12WP	00NR	2	'FROM->TO'	G11_054	'CIMARRON - DRAPER LAKE 345KV CKT 1'	717	0.218	111.75	'GEN336153 1-WATERFORD UNIT#3'
12WP	00NR	2	'FROM->TO'	G11_054	'CIMARRON - DRAPER LAKE 345KV CKT 1'	717	0.218	111.00	'GEN337911 1-ARKANSAS NUCLEAR ONE UNIT #2'
12WP	00NR	2	'FROM->TO'	G11_054	'CIMARRON - DRAPER LAKE 345KV CKT 1'	717	0.218	110.95	'GEN515042 1-SEMINOLE 3G'
12WP	00NR	2	'FROM->TO'	G11_054	'CIMARRON - DRAPER LAKE 345KV CKT 1'	717	0.218	110.70	'GEN335831 1-RIVERBEND UNIT#1'
12WP	00NR	2	'FROM->TO'	G11_054	'CIMARRON - DRAPER LAKE 345KV CKT 1'	717	0.218	109.97	'GEN501801 1-DOLET HILLS UNIT1'
12WP	00NR	2	'FROM->TO'	G11_054	'CIMARRON - DRAPER LAKE 345KV CKT 1'	717	0.218	109.97	'GEN515041 1-SEMINOLE 2G'
12WP	00NR	2	'FROM->TO'	G11_054	'CIMARRON - DRAPER LAKE 345KV CKT 1'	717	0.218	109.77	'GEN337910 1-ARKANSAS NUCLEAR ONE UNIT #1'
12WP	00NR	2	'FROM->TO'	G11_054	'CIMARRON - DRAPER LAKE 345KV CKT 1'	717	0.218	109.35	'GEN520947 1-HUGO1'
12WP	00NR	2	'FROM->TO'	G11_054	'CIMARRON - DRAPER LAKE 345KV CKT 1'	717	0.218	108.70	'GEN337652 1-WHITE BLUFF UNIT #1'
12WP	00NR	2	'FROM->TO'	G11_054	'CIMARRON - DRAPER LAKE 345KV CKT 1'	717	0.218	108.46	'GEN509403 1-PIRKEY GENERATION'
12WP	00NR	2	'FROM->TO'	G11_054	'CIMARRON - DRAPER LAKE 345KV CKT 1'	717	0.218	108.45	'GEN509416 1-TURK GENERATION'
12WP	00NR	2	'FROM->TO'	G11_054	'CIMARRON - DRAPER LAKE 345KV CKT 1'	717	0.218	108.30	'GEN336252 1-NINEMILE POINT UNIT#5'
12WP	00NR	2	'FROM->TO'	G11_054	'CIMARRON - DRAPER LAKE 345KV CKT 1'	717	0.218	108.28	'GEN515040 1-SEMINOLE 1G'
12WP	00NR	2	'FROM->TO'	G11_054	'CIMARRON - DRAPER LAKE 345KV CKT 1'	717	0.218	108.21	'GEN501813 1-RODEMACHER UNIT 3'
12WP	00NR	2	'FROM->TO'	G11_054	'CIMARRON - DRAPER LAKE 345KV CKT 1'	717	0.218	108.20	'GEN336251 1-NINEMILE POINT UNIT#4'
12WP	00NR	2	'FROM->TO'	G11_054	'CIMARRON - DRAPER LAKE 345KV CKT 1'	717	0.218	108.20	'GEN338146 1-INDEPENDENCE UNIT #2'
12WP	00NR	2	'FROM->TO'	G11_054	'CIMARRON - DRAPER LAKE 345KV CKT 1'	717	0.218	108.09	'GEN337041 1-GERALD ANDRUS'
12WP	00NR	2	'FROM->TO'	G11_054	'CIMARRON - DRAPER LAKE 345KV CKT 1'	717	0.218	108.07	'GEN337653 1-WHITE BLUFF UNIT #2'
12WP	00NR	2	'FROM->TO'	G11_054	'CIMARRON - DRAPER LAKE 345KV CKT 1'	717	0.218	108.07	'GEN338143 1-INDEPENDENCE UNIT #1'
12WP	00NR	2	'FROM->TO'	G11_054	'CIMARRON - DRAPER LAKE 345KV CKT 1'	717	0.218	107.57	'GEN501812 1-RODEMACHER UNIT 2'
12WP	00NR	2	'FROM->TO'	G11_054	'CIMARRON - DRAPER LAKE 345KV CKT 1'	717	0.218	107.51	'GEN509406 1-WELSH #3'
12WP	00NR	2	'FROM->TO'	G11_054	'CIMARRON - DRAPER LAKE 345KV CKT 1'	717	0.218	107.51	'GEN509405 1-WELSH #2'
12WP	00NR	2	'FROM->TO'	G11_054	'CIMARRON - DRAPER LAKE 345KV CKT 1'	717	0.218	107.51	'GEN509404 1-WELSH #1'
12WP	00NR	2	'FROM->TO'	G11_054	'CIMARRON - DRAPER LAKE 345KV CKT 1'	717	0.218	107.43	'GEN335206 1-NELSON UNIT 6'
12WP	00NR	2	'FROM->TO'	G11_054	'CIMARRON - DRAPER LAKE 345KV CKT 1'	717	0.218	107.22	'GEN336831 1-BAXTER WILSON SES'
12WP	00NR	2	'FROM->TO'	G11_054	'CIMARRON - DRAPER LAKE 345KV CKT 1'	717	0.218	107.18	'GEN334440 1-SABINE UNIT 4'
12WP	00NR	2	'FROM->TO'	G11_054	'CIMARRON - DRAPER LAKE 345KV CKT 1'	717	0.218	107.15	'GEN515226 1-MUSKOGEE 6G'
12WP	00NR	2	'FROM->TO'	G11_054	'CIMARRON - DRAPER LAKE 345KV CKT 1'	717	0.218	106.99	'GEN338388 1-1PLUMPT 23.000'
12WP	00NR	2	'FROM->TO'	G11_054	'CIMARRON - DRAPER LAKE 345KV CKT 1'	717	0.218	106.75	'GEN515223 1-MUSKOGEE 4G'
12WP	00NR	2	'FROM->TO'	G11_054	'CIMARRON - DRAPER LAKE 345KV CKT 1'	717	0.218	106.75	'GEN515225 1-MUSKOGEE 5G'
12WP	00NR	2	'FROM->TO'	G11_054	'CIMARRON - DRAPER LAKE 345KV CKT 1'	717	0.218	106.71	'GEN335204 1-NELSON UNIT 4'
12WP	00NR	2	'FROM->TO'	G11_054	'CIMARRON - DRAPER LAKE 345KV CKT 1'	717	0.218	106.66	'GEN336801 1-BAXTER WILSON UNIT #1'
12WP	00NR	2	'FROM->TO'	G11_054	'CIMARRON - DRAPER LAKE 345KV CKT 1'	717	0.218	106.63	'GEN334433 1-SABINE UNIT 3'
12WP	00NR	2	'FROM->TO'	G11_054	'CIMARRON - DRAPER LAKE 345KV CKT 1'	717	0.218	106.63	'GEN334441 1-SABINE UNIT 5'
12WP	00NR	2	'FROM->TO'	G11_054	'CIMARRON - DRAPER LAKE 345KV CKT 1'	717	0.218	105.44	'GEN336170 1-GULF OXY U4'
12WP	00NR	2	'FROM->TO'	G11_054	'CIMARRON - DRAPER LAKE 345KV CKT 1'	717	0.218	105.25	'GEN334070 1-LEWIS CREEK 1'
12WP	00NR	2	'FROM->TO'	G11_054	'CIMARRON - DRAPER LAKE 345KV CKT 1'	717	0.218	105.21	'GEN334071 1-LEWIS CREEK 2'
12WP	00NR	2	'FROM->TO'	G11_054	'CIMARRON - DRAPER LAKE 345KV CKT 1'	717	0.218	105.11	'GEN300006 1-NEW MADRID UNIT 1'

SEASON	GROUP	SCENARIO	DIRECTION	SOURCE	MONITORED ELEMENT	RATE B (MVA)	TDF	(%MVA) LOADING	CONTINGENCY
12WP	00NR	2	'FROM->TO'	G11_054	'CIMARRON - DRAPER LAKE 345KV CKT 1'	717	0.218	105.09	'GEN300007 1-NEW MADRID UNIT 2'
12WP	00NR	2	'FROM->TO'	G11_054	'CIMARRON - DRAPER LAKE 345KV CKT 1'	717	0.218	105.05	'GEN509394 1-FLINT CREEK'
12WP	00NR	2	'FROM->TO'	G11_054	'CIMARRON - DRAPER LAKE 345KV CKT 1'	717	0.218	104.92	'GEN512688 2-GRDA1 GSU2 22'
12WP	00NR	2	'FROM->TO'	G11_054	'CIMARRON - DRAPER LAKE 345KV CKT 1'	717	0.218	104.88	'GEN334432 1-SABINE UNIT 2'
12WP	00NR	2	'FROM->TO'	G11_054	'CIMARRON - DRAPER LAKE 345KV CKT 1'	717	0.218	104.88	'GEN334431 1-SABINE UNIT 1'
12WP	00NR	2	'FROM->TO'	G11_054	'CIMARRON - DRAPER LAKE 345KV CKT 1'	717	0.218	104.86	'GEN334030 1-FRONTIER UNIT 1'
12WP	00NR	2	'FROM->TO'	G11_054	'CIMARRON - DRAPER LAKE 345KV CKT 1'	717	0.218	104.86	'GEN334031 1-FRONTIER UNIT 2'
12WP	00NR	2	'FROM->TO'	G11_054	'CIMARRON - DRAPER LAKE 345KV CKT 1'	717	0.218	104.84	'GEN509393 S1-ARSENAL HILL GENS #4 (STALL)'
12WP	00NR	2	'FROM->TO'	G11_054	'CIMARRON - DRAPER LAKE 345KV CKT 1'	717	0.218	104.80	'GEN335612 1-WILLOW GLENN UNIT#2'
12WP	00NR	2	'FROM->TO'	G11_054	'CIMARRON - DRAPER LAKE 345KV CKT 1'	717	0.218	104.70	'GEN512689 1-GRDA1 GSU1 22'
12WP	00NR	2	'FROM->TO'	G11_054	'CIMARRON - DRAPER LAKE 345KV CKT 1'	717	0.218	104.70	'GEN509391 G1-ARSENAL HILL GENS #2 (STALL)'
12WP	00NR	2	'FROM->TO'	G11_054	'CIMARRON - DRAPER LAKE 345KV CKT 1'	717	0.218	104.70	'GEN509392 G2-ARSENAL HILL GENS #3 (STALL)'
12WP	00NR	2	'FROM->TO'	G11_054	'CIMARRON - DRAPER LAKE 345KV CKT 1'	717	0.218	104.58	'GEN503909 1-FULTONU1 1 16.000'
12WP	00NR	2	'FROM->TO'	G11_054	'CIMARRON - DRAPER LAKE 345KV CKT 1'	717	0.218	104.56	'GEN337428 1-PERYVILLE UNIT #1'
12WP	00NR	2	'FROM->TO'	G11_054	'CIMARRON - DRAPER LAKE 345KV CKT 1'	717	0.218	104.56	'GEN337430 1-PERYVILLE UNIT #3'
12WP	00NR	2	'FROM->TO'	G11_054	'CIMARRON - DRAPER LAKE 345KV CKT 1'	717	0.218	104.52	'GEN337429 1-PERYVILLE UNIT #2'
12WP	00NR	2	'FROM->TO'	G11_054	'CIMARRON - DRAPER LAKE 345KV CKT 1'	717	0.218	104.52	'GEN337432 1-PERYVILLE UNIT #5'
12WP	00NR	2	'FROM->TO'	G11_054	'CIMARRON - DRAPER LAKE 345KV CKT 1'	717	0.218	104.49	'GEN511840 1-NORTHEASTERN STATION #3'
12WP	00NR	2	'FROM->TO'	G11_054	'CIMARRON - DRAPER LAKE 345KV CKT 1'	717	0.218	104.48	'GEN511839 1-NORTHEASTERN STATION #2'
12WP	00NR	2	'FROM->TO'	G11_054	'CIMARRON - DRAPER LAKE 345KV CKT 1'	717	0.218	104.47	'GEN506752 1-LEBROCK GAS 1'
12WP	00NR	2	'FROM->TO'	G11_054	'CIMARRON - DRAPER LAKE 345KV CKT 1'	717	0.218	104.46	'GEN511841 1-NORTHEASTERN STATION #4'
12WP	00NR	2	'FROM->TO'	G11_054	'CIMARRON - DRAPER LAKE 345KV CKT 1'	717	0.218	104.44	'GEN335075 1-DYNEGY#1'
12WP	00NR	2	'FROM->TO'	G11_054	'CIMARRON - DRAPER LAKE 345KV CKT 1'	717	0.218	104.43	'GEN318007 1-5MOROW161 161.00'
12WP	00NR	2	'FROM->TO'	G11_054	'CIMARRON - DRAPER LAKE 345KV CKT 1'	717	0.218	104.43	'GEN336167 1-GULF OXY U1'
12WP	00NR	2	'FROM->TO'	G11_054	'CIMARRON - DRAPER LAKE 345KV CKT 1'	717	0.218	104.43	'GEN336168 1-GULF OXY U2'
12WP	00NR	2	'FROM->TO'	G11_054	'CIMARRON - DRAPER LAKE 345KV CKT 1'	717	0.218	104.43	'GEN336169 1-GULF OXY U3'
12WP	00NR	2	'FROM->TO'	G11_054	'CIMARRON - DRAPER LAKE 345KV CKT 1'	717	0.218	104.41	'GEN335203 1-NELSON UNIT 3'
12WP	00NR	2	'FROM->TO'	G11_054	'CIMARRON - DRAPER LAKE 345KV CKT 1'	717	0.218	104.36	'GEN334392 1-EXXON MOBIL IPP 1'
12WP	00NR	2	'FROM->TO'	G11_054	'CIMARRON - DRAPER LAKE 345KV CKT 1'	717	0.218	104.30	'GEN337006 1-DUKE MCADAMS G1'
12WP	00NR	2	'FROM->TO'	G11_054	'CIMARRON - DRAPER LAKE 345KV CKT 1'	717	0.218	104.30	'GEN337007 1-DUKE MCADAMS G2'
12WP	00NR	2	'FROM->TO'	G11_054	'CIMARRON - DRAPER LAKE 345KV CKT 1'	717	0.218	104.28	'GEN505432 1-SIKESTON'
12WP	00NR	2	'FROM->TO'	G11_054	'CIMARRON - DRAPER LAKE 345KV CKT 1'	717	0.218	104.28	'GEN337008 1-DUKE MCADAMS S1'
12WP	00NR	2	'FROM->TO'	G11_054	'CIMARRON - DRAPER LAKE 345KV CKT 1'	717	0.218	104.22	'GEN338500 1-MCCLELLAN UNIT #1'
12WP	00NR	2	'FROM->TO'	G11_054	'CIMARRON - DRAPER LAKE 345KV CKT 1'	717	0.218	104.15	'GEN515266 1-AES 1G'
12WP	00NR	2	'FROM->TO'	G11_054	'CIMARRON - DRAPER LAKE 345KV CKT 1'	717	0.218	104.15	'GEN515267 1-AES 2G'
12WP	00NR	2	'FROM->TO'	G11_054	'CIMARRON - DRAPER LAKE 345KV CKT 1'	717	0.218	104.11	'8DANIEL 500.00 - MCKNIGHT 500KV CKT 1'
12WP	00NR	2	'FROM->TO'	G11_054	'CIMARRON - DRAPER LAKE 345KV CKT 1'	717	0.218	104.11	'GEN337954 1-LYNCH UNIT #3'
12WP	00NR	2	'FROM->TO'	G11_054	'CIMARRON - DRAPER LAKE 345KV CKT 1'	717	0.218	104.11	'GEN511938 1-OEC STEAM # 1'
12WP	00NR	2	'FROM->TO'	G11_054	'CIMARRON - DRAPER LAKE 345KV CKT 1'	717	0.218	104.09	'GEN335611 1-WILLOW GLENN UNIT#1'
12WP	00NR	2	'FROM->TO'	G11_054	'CIMARRON - DRAPER LAKE 345KV CKT 1'	717	0.218	104.06	'GEN335201 1-NELSON UNIT 1'
12WP	00NR	2	'FROM->TO'	G11_054	'CIMARRON - DRAPER LAKE 345KV CKT 1'	717	0.218	104.05	'GEN335202 1-NELSON UNIT 2'
12WP	00NR	2	'FROM->TO'	G11_054	'CIMARRON - DRAPER LAKE 345KV CKT 1'	717	0.218	104.02	'GEN336944 1-REX BROWN'
12WP	00NR	2	'FROM->TO'	G11_054	'CIMARRON - DRAPER LAKE 345KV CKT 1'	717	0.218	104.01	'GEN334456 1-CONOCO UNIT#1'
12WP	00NR	2	'FROM->TO'	G11_054	'CIMARRON - DRAPER LAKE 345KV CKT 1'	717	0.218	103.99	'GEN506749 1-EASTMAN GENERATION A'
12WP	00NR	2	'FROM->TO'	G11_054	'CIMARRON - DRAPER LAKE 345KV CKT 1'	717	0.218	103.93	'GEN338510 1-1S1KNWRI'
12WP	00NR	2	'FROM->TO'	G11_054	'CIMARRON - DRAPER LAKE 345KV CKT 1'	717	0.218	103.93	'GEN338511 1-1C7KNWRI'
12WP	00NR	2	'FROM->TO'	G11_054	'CIMARRON - DRAPER LAKE 345KV CKT 1'	717	0.218	103.92	'GEN335137 C4-PPG'
12WP	00NR	2	'FROM->TO'	G11_054	'CIMARRON - DRAPER LAKE 345KV CKT 1'	717	0.218	103.92	'GEN338513 1-BAILEY UNIT #1'
12WP	00NR	2	'FROM->TO'	G11_054	'CIMARRON - DRAPER LAKE 345KV CKT 1'	717	0.218	103.87	'GEN300003 1-THOMAS HILL UNIT 3'
12WP	00NR	2	'FROM->TO'	G11_054	'CIMARRON - DRAPER LAKE 345KV CKT 1'	717	0.218	103.84	'GEN500915 3-WESTERN KRAFT'
12WP	00NR	2	'FROM->TO'	G11_054	'CIMARRON - DRAPER LAKE 345KV CKT 1'	717	0.218	103.84	'GEN300016 1-1G1GPDEL 18.000'
12WP	00NR	2	'FROM->TO'	G11_054	'CIMARRON - DRAPER LAKE 345KV CKT 1'	717	0.218	103.84	'GEN300017 1-1G2GPDEL 18.000'
12WP	00NR	2	'FROM->TO'	G11_054	'CIMARRON - DRAPER LAKE 345KV CKT 1'	717	0.218	103.82	'GEN501910 1-ACADIA UNIT ST1'
12WP	00NR	2	'FROM->TO'	G11_054	'CIMARRON - DRAPER LAKE 345KV CKT 1'	717	0.218	103.81	'GEN334467 1-DUPONT UNIT#1'
12WP	00NR	2	'FROM->TO'	G11_054	'CIMARRON - DRAPER LAKE 345KV CKT 1'	717	0.218	103.81	'GEN334335 1-TOLEDO BEND'
12WP	00NR	2	'FROM->TO'	G11_054	'CIMARRON - DRAPER LAKE 345KV CKT 1'	717	0.218	103.80	'GEN337124 5-LS POWER BATESVILLE'
12WP	00NR	2	'FROM->TO'	G11_054	'CIMARRON - DRAPER LAKE 345KV CKT 1'	717	0.218	103.80	'GEN503900 1-FITZHUGH CT1'
12WP	00NR	2	'FROM->TO'	G11_054	'CIMARRON - DRAPER LAKE 345KV CKT 1'	717	0.218	103.80	'GEN335546 3-DOW COGEN'
12WP	00NR	2	'FROM->TO'	G11_054	'CIMARRON - DRAPER LAKE 345KV CKT 1'	717	0.218	103.78	'GEN318008 3-5MOSEL161 161.00'
12WP	00NR	2	'FROM->TO'	G11_054	'CIMARRON - DRAPER LAKE 345KV CKT 1'	717	0.218	103.77	'GEN549893 2-SOUTHWEST 2'
12WP	00NR	2	'FROM->TO'	G11_054	'CIMARRON - DRAPER LAKE 345KV CKT 1'	717	0.218	103.76	'GEN336176 1-UNION CARBIDE COGEN GT1'
12WP	00NR	2	'FROM->TO'	G11_054	'CIMARRON - DRAPER LAKE 345KV CKT 1'	717	0.218	103.76	'GEN336177 1-UNION CARBIDE COGEN GT2'
12WP	00NR	2	'FROM->TO'	G11_054	'CIMARRON - DRAPER LAKE 345KV CKT 1'	717	0.218	103.73	'A059'
12WP	00NR	2	'FROM->TO'	G11_054	'CIMARRON - DRAPER LAKE 345KV CKT 1'	717	0.218	103.73	'EUREKA SPRIN'
12WP	00NR	2	'FROM->TO'	G11_054	'CIMARRON - DRAPER LAKE 345KV CKT 1'	717	0.218	103.73	'SHERIDAN EHV - WHITE BLUFF 500KV CKT 1'
12WP	00NR	2	'FROM->TO'	G11_054	'CIMARRON - DRAPER LAKE 345KV CKT 1'	717	0.218	103.69	'GEN335644 1-EXXON UNIT5'
12WP	00NR	2	'FROM->TO'	G11_054	'CIMARRON - DRAPER LAKE 345KV CKT 1'	717	0.218	103.65	'LACYGNE - STILWELL 345KV CKT 1'
12WP	00NR	2	'FROM->TO'	G11_054	'CIMARRON - DRAPER LAKE 345KV CKT 1'	717	0.218	103.21	'BASE CASE'
12WP	00NR	2	'FROM->TO'	G11_054	'CIMARRON - DRAPER LAKE 345KV CKT 1'	717	0.218	103.21	'NO5_GEN-NORTH OMAHA 5'
12WP	00NR	2	'FROM->TO'	G11_054	'CIMARRON - DRAPER LAKE 345KV CKT 1'	717	0.218	102.81	'DRAPER LAKE - DRPCAPS4 138.00 138KV CKT 1'
12WP	00NR	2	'FROM->TO'	G11_054	'CIMARRON - DRAPER LAKE 345KV CKT 1'	717	0.218	102.81	'GEN542957 1-IATAN UNIT #1'
12WP	00NR	2	'FROM->TO'	G11_054	'CIMARRON - DRAPER LAKE 345KV CKT 1'	717	0.218	102.80	'GEN542956 2-LACYGNE UNIT #2'
12WP	00NR	2	'FROM->TO'	G11_054	'CIMARRON - DRAPER LAKE 345KV CKT 1'	717	0.218	102.79	'GEN532663 1-LAWRENCE ENERGY CENTER UNIT 5'
12WP	00NR	2	'FROM->TO'	G11_054	'CIMARRON - DRAPER LAKE 345KV CKT 1'	717	0.218	102.77	'GEN542955 1-LACYGNE UNIT #1'
12WP	00NR	2	'FROM->TO'	G11_054	'CIMARRON - DRAPER LAKE 345KV CKT 1'	717	0.218	102.74	'BAXTER WILSON SES - RAY BRASWELL SES 500KV CKT 1'
12WP	00NR	2	'FROM->TO'	G11_054	'CIMARRON - DRAPER LAKE 345KV CKT 1'	717	0.218	102.73	'GEN542962 2-IATAN UNIT #2'
12WP	00NR	2	'FROM->TO'	G11_054	'CIMARRON - DRAPER LAKE 345KV CKT 1'	717	0.218	102.65	'G11_040_TAP 138.00 - POOLEVILLE 138KV CKT 1'
12WP	00NR	2	'FROM->TO'	G11_054	'CIMARRON - DRAPER LAKE 345KV CKT 1'	717	0.218	102.50	'GEN527903 1-HOBBS PLANT #3 (ST)'

SEASON	GROUP	SCENARIO	DIRECTION	SOURCE	MONITORED ELEMENT	RATE B (MVA)	TDF	(%MVA) LOADING	CONTINGENCY
12WP	00NR	2	'FROM->TO'	G11_054	'CIMARRON - DRAPER LAKE 345KV CKT 1'	717	0.218	102.43	'GEN523461 1-BLACKHAWK GEN #1'
12WP	00NR	2	'FROM->TO'	G11_054	'CIMARRON - DRAPER LAKE 345KV CKT 1'	717	0.218	102.43	'GEN523462 1-BLACKHAWK GEN #2'
12WP	00NR	2	'FROM->TO'	G11_054	'CIMARRON - DRAPER LAKE 345KV CKT 1'	717	0.218	102.40	'GEN560386 1-G10-029-1 0.6900'
12WP	00NR	2	'FROM->TO'	G11_054	'CIMARRON - DRAPER LAKE 345KV CKT 1'	717	0.218	102.40	'GEN560387 1-G10-029-2 0.6900'
12WP	00NR	2	'FROM->TO'	G11_054	'CIMARRON - DRAPER LAKE 345KV CKT 1'	717	0.218	102.40	'GEN560388 1-G10-029-3 0.6900'
12WP	00NR	2	'FROM->TO'	G11_054	'CIMARRON - DRAPER LAKE 345KV CKT 1'	717	0.218	102.30	'GEN532653 1-JEFFREY ENERGY CENTER UNIT 3'
12WP	00NR	2	'FROM->TO'	G11_054	'CIMARRON - DRAPER LAKE 345KV CKT 1'	717	0.218	102.28	'GEN532651 1-JEFFREY ENERGY CENTER UNIT 1'
12WP	00NR	2	'FROM->TO'	G11_054	'CIMARRON - DRAPER LAKE 345KV CKT 1'	717	0.218	102.26	'GEN532652 1-JEFFREY ENERGY CENTER UNIT 2'
12WP	00NR	2	'FROM->TO'	G11_054	'CIMARRON - DRAPER LAKE 345KV CKT 1'	717	0.218	102.24	'GEN527165 1-Mustang Gen #5'
12WP	00NR	2	'FROM->TO'	G11_054	'CIMARRON - DRAPER LAKE 345KV CKT 1'	717	0.218	102.24	'GEN527164 1-MUSTANG GEN #4 22 KV'
12WP	00NR	2	'FROM->TO'	G11_054	'CIMARRON - DRAPER LAKE 345KV CKT 1'	717	0.218	102.22	'GEN527901 1-HOBBS PLANT #1 (CT)'
12WP	00NR	2	'FROM->TO'	G11_054	'CIMARRON - DRAPER LAKE 345KV CKT 1'	717	0.218	102.21	'GEN527902 1-HOBBS PLANT #2 (CT)'
12WP	00NR	2	'FROM->TO'	G11_054	'CIMARRON - DRAPER LAKE 345KV CKT 1'	717	0.218	102.18	'GEN527163 1-MUSTANG GEN #3 22 KV'
12WP	00NR	2	'FROM->TO'	G11_054	'CIMARRON - DRAPER LAKE 345KV CKT 1'	717	0.218	102.16	'GEN527161 1-MUSTANG GEN #1'
12WP	00NR	2	'FROM->TO'	G11_054	'CIMARRON - DRAPER LAKE 345KV CKT 1'	717	0.218	102.15	'GEN527162 1-MUSTANG GEN #2'
12WP	00NR	2	'FROM->TO'	G11_054	'CIMARRON - DRAPER LAKE 345KV CKT 1'	717	0.218	102.08	'GEN560356 1-G10-53 0.6900'
12WP	00NR	2	'FROM->TO'	G11_054	'CIMARRON - DRAPER LAKE 345KV CKT 1'	717	0.218	102.03	'GEN520997 1-MORLND2'
12WP	00NR	2	'FROM->TO'	G11_054	'CIMARRON - DRAPER LAKE 345KV CKT 1'	717	0.218	102.02	'GEN560329 1-G10-45 0.6900'
12WP	00NR	2	'FROM->TO'	G11_054	'CIMARRON - DRAPER LAKE 345KV CKT 1'	717	0.218	101.96	'GEN520998 1-MORLND3'
12WP	00NR	2	'FROM->TO'	G11_054	'CIMARRON - DRAPER LAKE 345KV CKT 1'	717	0.218	101.84	'GEN514805 1-SOONER UNIT 1'
12WP	00NR	2	'FROM->TO'	G11_054	'CIMARRON - DRAPER LAKE 345KV CKT 1'	717	0.218	101.74	'GEN526333 1-JONES GEN #3 21 KV'
12WP	00NR	2	'FROM->TO'	G11_054	'CIMARRON - DRAPER LAKE 345KV CKT 1'	717	0.218	101.74	'GEN526334 1-JONES_4 116.500'
12WP	00NR	2	'FROM->TO'	G11_054	'CIMARRON - DRAPER LAKE 345KV CKT 1'	717	0.218	101.54	'GEN514806 1-SOONER UNIT 2'
12WP	00NR	2	'FROM->TO'	G11_054	'CIMARRON - DRAPER LAKE 345KV CKT 1'	717	0.218	101.31	'GEN531447 1-HOLCOMB GENERATOR'
12WP	00NR	2	'FROM->TO'	G11_054	'CIMARRON - DRAPER LAKE 345KV CKT 1'	717	0.218	100.78	'GEN523971 1-HARRINGTON GEN #1 24 KV'
12WP	00NR	2	'FROM->TO'	G11_054	'CIMARRON - DRAPER LAKE 345KV CKT 1'	717	0.218	100.69	'GEN523972 1-HARRINGTON GEN #2 24 KV'
12WP	00NR	2	'FROM->TO'	G11_054	'CIMARRON - DRAPER LAKE 345KV CKT 1'	717	0.218	100.68	'GEN523973 1-HARRINGTON GEN #3 24 KV'
12WP	00NR	2	'FROM->TO'	G11_054	'CIMARRON - DRAPER LAKE 345KV CKT 1'	717	0.218	100.29	'GEN560225 1-G10-43 18.000'
12WP	00NR	2	'FROM->TO'	G11_054	'CIMARRON - DRAPER LAKE 345KV CKT 1'	717	0.218	100.05	'GEN532751 1-WOLF CREEK GENERATING STATION UNIT 1'
12WP	00NR	2	'FROM->TO'	G11_054	'CIMARRON - DRAPER LAKE 345KV CKT 1'	717	0.218	104.10	'WEBRE - WELLS 500KV CKT 1'
12WP	00NR	2	'FROM->TO'	G11_054	'CIMARRON - DRAPER LAKE 345KV CKT 1'	717	0.218	103.81	'CLINTON AIR FORCE BASE TAP - ELK CITY 138KV CKT 1'
12WP	00NR	2	'FROM->TO'	G11_054	'CIMARRON - DRAPER LAKE 345KV CKT 1'	717	0.218	103.80	'CLINTON AIR FORCE BASE TAP - HOBART JUNCTION 138KV CKT 1'
12WP	00NR	2	'FROM->TO'	G11_054	'CIMARRON - DRAPER LAKE 345KV CKT 1'	717	0.218	104.07	'ELK CITY 230KV - SWEETWATER 230KV CKT 1'
12WP	00NR	2	'FROM->TO'	G11_054	'CIMARRON - DRAPER LAKE 345KV CKT 1'	717	0.218	104.07	'ELK CITY 230KV (ELKCTY-6) 230/138/13.8KV TRANSFORMER CKT 1'
12WP	00NR	2	'FROM->TO'	G11_054	'CIMARRON - DRAPER LAKE 345KV CKT 1'	717	0.218	103.99	'SPP-SWPS-03'
12WP	00NR	2	'FROM->TO'	G11_054	'CIMARRON - DRAPER LAKE 345KV CKT 1'	717	0.218	103.96	'GRAPEVINE INTERCHANGE - STATELINE INTERCHANGE 230KV CKT 1'
12WP	00NR	2	'FROM->TO'	G11_054	'CIMARRON - DRAPER LAKE 345KV CKT 1'	717	0.218	103.89	'SPP-SWPS-02'
12WP	00NR	2	'FROM->TO'	G11_054	'CIMARRON - DRAPER LAKE 345KV CKT 1'	717	0.218	103.89	'EL RENO - ROMAN NOSE 138KV CKT 1'
12WP	00NR	2	'FROM->TO'	G11_054	'CIMARRON - DRAPER LAKE 345KV CKT 1'	717	0.218	103.85	'ROMAN NOSE - SOUTHARD 138KV CKT 1'
12WP	00NR	2	'FROM->TO'	G11_054	'CIMARRON - DRAPER LAKE 345KV CKT 1'	717	0.218	103.83	'DEWEY - SOUTHARD 138KV CKT 1'
12WP	00NR	2	'FROM->TO'	G11_054	'CIMARRON - DRAPER LAKE 345KV CKT 1'	717	0.218	103.66	'MAGNET COVE - SHERIDAN EHV 500KV CKT 1'
12WP	00NR	2	'FROM->TO'	G11_054	'CIMARRON - DRAPER LAKE 345KV CKT 1'	717	0.218	104.10	'DOLET HILLS - SOUTHWEST SHREVEPORT 345KV CKT 1'
12WP	00NR	2	'FROM->TO'	G11_054	'CIMARRON - DRAPER LAKE 345KV CKT 1'	717	0.218	102.66	'LEBROCK - TENASKA RUSK COUNTY 345KV CKT 1'
12WP	00NR	2	'FROM->TO'	G11_054	'CIMARRON - DRAPER LAKE 345KV CKT 1'	717	0.218	102.65	'CROCKETT - TENASKA RUSK COUNTY 345KV CKT 1'
12WP	00NR	2	'FROM->TO'	G11_054	'CIMARRON - DRAPER LAKE 345KV CKT 1'	717	0.218	102.41	'DOLET HILLS 345/230KV TRANSFORMER CKT 1'
12WP	00NR	2	'FROM->TO'	G11_054	'CIMARRON - DRAPER LAKE 345KV CKT 1'	717	0.218	103.98	'MARSHALL - WOODRING 138KV CKT 1'
12WP	00NR	2	'FROM->TO'	G11_054	'CIMARRON - DRAPER LAKE 345KV CKT 1'	717	0.218	103.97	'COTTONWOOD CREEK - MARSHALL 138KV CKT 1'
12WP	00NR	2	'FROM->TO'	G11_054	'CIMARRON - DRAPER LAKE 345KV CKT 1'	717	0.218	102.47	'WELSH - WILKES 345KV CKT 1'
12WP	00NR	2	'FROM->TO'	G11_054	'CIMARRON - DRAPER LAKE 345KV CKT 1'	717	0.218	104.01	'ELDORADO EHV - SHERIDAN EHV 500KV CKT 1'
12WP	00NR	2	'FROM->TO'	G11_054	'CIMARRON - DRAPER LAKE 345KV CKT 1'	717	0.218	102.11	'NORTHWEST TEXARKANA - VALLIANT 345KV CKT 1'
13WP	00NR	2	'FROM->TO'	G11_054	'CIMARRON - DRAPER LAKE 345KV CKT 1'	717	0.218	116.37	'MATTHEWSON 345.00 - NORTHWEST 345KV CKT 1'
12WP	00NR	2	'FROM->TO'	G11_054	'CIMARRON - DRAPER LAKE 345KV CKT 1'	717	0.218	106.36	'LAWTON EASTSIDE - OKLAUNION 345KV CKT 1'
12WP	00NR	2	'FROM->TO'	G11_054	'CIMARRON - DRAPER LAKE 345KV CKT 1'	717	0.218	105.07	'G05-15T 345.00 - OKLAUNION 345KV CKT 1'
12WP	00NR	2	'FROM->TO'	G11_054	'CIMARRON - DRAPER LAKE 345KV CKT 1'	717	0.218	104.87	'G05-15T 345.00 - TUCO INTERCHANGE 345KV CKT 1'
12WP	00NR	2	'FROM->TO'	G11_054	'CIMARRON - DRAPER LAKE 345KV CKT 1'	717	0.218	102.74	'DISCVRY - FOSTER 138KV CKT 1'
12WP	00NR	2	'FROM->TO'	G11_054	'CIMARRON - DRAPER LAKE 345KV CKT 1'	717	0.218	102.57	'DISCVRY - OAKCREEK 138KV CKT 1'
12WP	00NR	2	'FROM->TO'	G11_054	'CIMARRON - DRAPER LAKE 345KV CKT 1'	717	0.218	101.99	'LYDIA - WELSH 345KV CKT 1'
12WP	00NR	2	'FROM->TO'	G11_054	'CIMARRON - DRAPER LAKE 345KV CKT 1'	717	0.218	104.04	'7SAREPT 345.00 - ELDORADO EHV 345KV CKT 1'
12WP	00NR	2	'FROM->TO'	G11_054	'CIMARRON - DRAPER LAKE 345KV CKT 1'	717	0.218	104.04	'A222'
12WP	00NR	2	'FROM->TO'	G11_054	'CIMARRON - DRAPER LAKE 345KV CKT 1'	717	0.218	104.04	'ELDORADO EHV 500/345KV TRANSFORMER CKT 1'
12WP	00NR	2	'FROM->TO'	G11_054	'CIMARRON - DRAPER LAKE 345KV CKT 1'	717	0.218	101.38	'LYDIA - VALLIANT 345KV CKT 1'
12WP	00NR	2	'FROM->TO'	G11_054	'CIMARRON - DRAPER LAKE 345KV CKT 1'	717	0.218	105.09	'ARCADIA - KAMO MEMORIAL 138KV CKT 1'
12WP	00NR	2	'FROM->TO'	G11_054	'CIMARRON - DRAPER LAKE 345KV CKT 1'	717	0.218	103.80	'ARCADIA (ARCADIA3) 345/138/13.8KV TRANSFORMER CKT 1'
12WP	00NR	2	'FROM->TO'	G11_054	'CIMARRON - DRAPER LAKE 345KV CKT 1'	717	0.218	103.86	'ARCADIA (ARCADIA2) 345/138/13.8KV TRANSFORMER CKT 1'
12WP	00NR	2	'FROM->TO'	G11_054	'CIMARRON - DRAPER LAKE 345KV CKT 1'	717	0.218	102.30	'FIXICO TAP - MAUD 138KV CKT 1'
12WP	00NR	2	'FROM->TO'	G11_054	'CIMARRON - DRAPER LAKE 345KV CKT 1'	717	0.218	103.94	'7SAREPT 345.00 - LONGWOOD 345KV CKT 1'
12WP	00NR	2	'FROM->TO'	G11_054	'CIMARRON - DRAPER LAKE 345KV CKT 1'	717	0.218	103.81	'MORISNT4 138.00 - SOONER 138KV CKT 1'
12WP	00NR	2	'FROM->TO'	G11_054	'CIMARRON - DRAPER LAKE 345KV CKT 1'	717	0.217	102.55	'FIXICO TAP - WELEETKA 138KV CKT 1'
12WP	00NR	2	'FROM->TO'	G11_054	'CIMARRON - DRAPER LAKE 345KV CKT 1'	717	0.217	104.06	'ARCADIA - OMPA-EDMOND GARBER(LAKE) 138KV CKT 1'
12WP	00NR	2	'FROM->TO'	G11_054	'CIMARRON - DRAPER LAKE 345KV CKT 1'	717	0.217	104.00	'CHITWOOD - OMPA-EDMOND GARBER(LAKE) 138KV CKT 1'
12WP	00NR	2	'FROM->TO'	G11_054	'CIMARRON - DRAPER LAKE 345KV CKT 1'	717	0.217	103.97	'CHITWOOD - JONES TAP 138KV CKT 1'
12WP	00NR	2	'FROM->TO'	G11_054	'CIMARRON - DRAPER LAKE 345KV CKT 1'	717	0.217	102.70	'HIGHLAND - PINK SW 138KV CKT 1'
12WP	00NR	2	'FROM->TO'	G11_054	'CIMARRON - DRAPER LAKE 345KV CKT 1'	717	0.217	104.47	'MCELROY - STILLWATER 138KV CKT 1'
12WP	00NR	2	'FROM->TO'	G11_054	'CIMARRON - DRAPER LAKE 345KV CKT 1'	717	0.217	104.23	'KINZE - MCELROY 138KV CKT 1'
12WP	00NR	2	'FROM->TO'	G11_054	'CIMARRON - DRAPER LAKE 345KV CKT 1'	717	0.217	100.98	'FRANKLIN SW - MIDWEST TAP 138KV CKT 1'
12WP	00NR	2	'FROM->TO'	G11_054	'CIMARRON - DRAPER LAKE 345KV CKT 1'	717	0.217	104.73	'HORSESHOE LAKE - KAMO MEMORIAL 138KV CKT 1'
12WP	00NR	2	'FROM->TO'	G11_054	'CIMARRON - DRAPER LAKE 345KV CKT 1'	717	0.217	105.19	'MORISNT4 138.00 - STILLWATER 138KV CKT 1'
17WP	00NR	2	'FROM->TO'	G11_054	'CIMARRON - DRAPER LAKE 345KV CKT 1'	717	0.217	102.77	'CIMARRON (CIMARON1) 345/138/13.8KV TRANSFORMER CKT 1'

SEASON	GROUP	SCENARIO	DIRECTION	SOURCE	MONITORED ELEMENT	RATE B (MVA)	TDF	(%MVA) LOADING	CONTINGENCY
12WP	00NR	2	'FROM->TO'	G11_054	'CIMARRON - DRAPER LAKE 345KV CKT 1'	717	0.217	102.09	'SEMINOLE (SEMINOL2) 345/138/14.4KV TRANSFORMER CKT 1'
12WP	00NR	2	'FROM->TO'	G11_054	'CIMARRON - DRAPER LAKE 345KV CKT 1'	717	0.217	102.08	'SEMINOLE (SEMINOL1) 345/138/14.4KV TRANSFORMER CKT 1'
17WP	00NR	2	'FROM->TO'	G11_054	'CIMARRON - DRAPER LAKE 345KV CKT 1'	717	0.217	102.59	'CIMARRON (CIMARON2) 345/138/13.8KV TRANSFORMER CKT 1'
12WP	00NR	2	'FROM->TO'	G11_054	'CIMARRON - DRAPER LAKE 345KV CKT 1'	717	0.217	100.51	'BARNES 4 138.00 - DRAPER LAKE 138KV CKT 1'
12WP	00NR	2	'FROM->TO'	G11_054	'CIMARRON - DRAPER LAKE 345KV CKT 1'	717	0.217	101.94	'FRANKLIN - PINK SW 138KV CKT 1'
12WP	00NR	2	'FROM->TO'	G11_054	'CIMARRON - DRAPER LAKE 345KV CKT 1'	717	0.217	101.66	'FRANKLIN - FRANKLIN SW 138KV CKT 1'
17WP	00NR	2	'FROM->TO'	G11_054	'CIMARRON - DRAPER LAKE 345KV CKT 1'	717	0.216	106.61	'MATTHEWSON 345.00 - NORTHWEST 345KV CKT 1'
13WP	00NR	2	'FROM->TO'	G11_054	'CIMARRON - DRAPER LAKE 345KV CKT 1'	717	0.215	109.10	'SOONER - WOODRING 345KV CKT 1'
13WP	00NR	2	'FROM->TO'	G11_054	'CIMARRON - DRAPER LAKE 345KV CKT 1'	717	0.215	119.98	'ARCADIA - HORSESHOE LAKE 345KV CKT 1'
13WP	00NR	2	'FROM->TO'	G11_054	'CIMARRON - DRAPER LAKE 345KV CKT 1'	717	0.215	119.97	'HORSESHOE LAKE - SEMINOLE 345KV CKT 1'
13WP	00NR	2	'FROM->TO'	G11_054	'CIMARRON - DRAPER LAKE 345KV CKT 1'	717	0.214	118.95	'CLEVELAND - SOONER 345KV CKT 1'
13WP	00NR	2	'FROM->TO'	G11_054	'CIMARRON - DRAPER LAKE 345KV CKT 1'	717	0.214	104.34	'CLARKSVILLE - MUSKOGEE 345KV CKT 1'
13WP	00NR	2	'FROM->TO'	G11_054	'CIMARRON - DRAPER LAKE 345KV CKT 1'	717	0.214	112.40	'CIMARRON - CZECH HALL 138KV CKT 1'
13WP	00NR	2	'FROM->TO'	G11_054	'CIMARRON - DRAPER LAKE 345KV CKT 1'	717	0.214	111.95	'CZECH HALL - XEROX 138KV CKT 1'
13WP	00NR	2	'FROM->TO'	G11_054	'CIMARRON - DRAPER LAKE 345KV CKT 1'	717	0.214	111.93	'MORGAN - XEROX 138KV CKT 1'
13WP	00NR	2	'FROM->TO'	G11_054	'CIMARRON - DRAPER LAKE 345KV CKT 1'	717	0.214	111.82	'MORGAN - MUSTANG 138KV CKT 1'
12WP	00NR	2	'FROM->TO'	G11_054	'CIMARRON - DRAPER LAKE 345KV CKT 1'	717	0.213	103.95	'MUSKOGEE - PITTSBURG 345KV CKT 1'
13WP	00NR	2	'FROM->TO'	G11_054	'CIMARRON - DRAPER LAKE 345KV CKT 1'	717	0.213	114.10	'CLEVELAND - TULSA NORTH 345KV CKT 1'
17WP	00NR	2	'FROM->TO'	G11_054	'CIMARRON - DRAPER LAKE 345KV CKT 1'	717	0.213	109.72	'ARCADIA - HORSESHOE LAKE 345KV CKT 1'
17WP	00NR	2	'FROM->TO'	G11_054	'CIMARRON - DRAPER LAKE 345KV CKT 1'	717	0.213	109.71	'HORSESHOE LAKE - SEMINOLE 345KV CKT 1'
17WP	00NR	2	'FROM->TO'	G11_054	'CIMARRON - DRAPER LAKE 345KV CKT 1'	717	0.213	108.45	'CLEVELAND - SOONER 345KV CKT 1'
13WP	00NR	2	'FROM->TO'	G11_054	'CIMARRON - DRAPER LAKE 345KV CKT 1'	717	0.213	108.43	'JOHNSON COUNTY - PITTSBURG 345KV CKT 1'
17WP	00NR	2	'FROM->TO'	G11_054	'CIMARRON - DRAPER LAKE 345KV CKT 1'	717	0.213	101.94	'CIMARRON - CZECH HALL 138KV CKT 1'
17WP	00NR	2	'FROM->TO'	G11_054	'CIMARRON - DRAPER LAKE 345KV CKT 1'	717	0.213	101.50	'CZECH HALL - XEROX 138KV CKT 1'
17WP	00NR	2	'FROM->TO'	G11_054	'CIMARRON - DRAPER LAKE 345KV CKT 1'	717	0.213	101.48	'MORGAN - XEROX 138KV CKT 1'
17WP	00NR	2	'FROM->TO'	G11_054	'CIMARRON - DRAPER LAKE 345KV CKT 1'	717	0.213	101.42	'MORGAN - MUSTANG 138KV CKT 1'
13WP	00NR	2	'FROM->TO'	G11_054	'CIMARRON - DRAPER LAKE 345KV CKT 1'	717	0.213	109.90	'JOHNSON COUNTY - SUNNYSIDE 345KV CKT 1'
13WP	00NR	2	'FROM->TO'	G11_054	'CIMARRON - DRAPER LAKE 345KV CKT 1'	717	0.212	108.81	'OGE3TERM18'
13WP	00NR	2	'FROM->TO'	G11_054	'CIMARRON - DRAPER LAKE 345KV CKT 1'	717	0.212	108.71	'36 & MERIDIAN - PENNSYLVANIA 138KV CKT 1'
13WP	00NR	2	'FROM->TO'	G11_054	'CIMARRON - DRAPER LAKE 345KV CKT 1'	717	0.212	108.15	'CLARKSVILLE - ONETA 345KV CKT 1'
13WP	00NR	2	'FROM->TO'	G11_054	'CIMARRON - DRAPER LAKE 345KV CKT 1'	717	0.212	110.11	'REDBUD - RIVERSIDE STATION 345KV CKT 1'
13WP	00NR	2	'FROM->TO'	G11_054	'CIMARRON - DRAPER LAKE 345KV CKT 1'	717	0.212	111.40	'DBL-THIS-WWR'
13WP	00NR	2	'FROM->TO'	G11_054	'CIMARRON - DRAPER LAKE 345KV CKT 1'	717	0.212	109.01	'CIMARRON - HAYMAKER 138KV CKT 1'
13WP	00NR	2	'FROM->TO'	G11_054	'CIMARRON - DRAPER LAKE 345KV CKT 1'	717	0.212	108.89	'DIVISION AVE - HAYMAKER 138KV CKT 1'
13WP	00NR	2	'FROM->TO'	G11_054	'CIMARRON - DRAPER LAKE 345KV CKT 1'	717	0.212	108.35	'GRACEMONT (BANK 1) 345/138/13.8KV TRANSFORMER CKT 1'
13WP	00NR	2	'FROM->TO'	G11_054	'CIMARRON - DRAPER LAKE 345KV CKT 1'	717	0.212	111.09	'NORTHWEST (NORTWST2) 345/138/13.8KV TRANSFORMER CKT 1'
13WP	00NR	2	'FROM->TO'	G11_054	'CIMARRON - DRAPER LAKE 345KV CKT 1'	717	0.212	108.62	'CLASSEN - ROBINSON 138KV CKT 1'
13WP	00NR	2	'FROM->TO'	G11_054	'CIMARRON - DRAPER LAKE 345KV CKT 1'	717	0.212	108.33	'LIGHTNING CREEK - ROBINSON 138KV CKT 1'
13WP	00NR	2	'FROM->TO'	G11_054	'CIMARRON - DRAPER LAKE 345KV CKT 1'	717	0.212	108.17	'LIGHTNING CREEK - TROSPER 138KV CKT 1'
13WP	00NR	2	'FROM->TO'	G11_054	'CIMARRON - DRAPER LAKE 345KV CKT 1'	717	0.212	108.64	'BLANCHARD - CORNVILLE 138KV CKT 1'
13WP	00NR	2	'FROM->TO'	G11_054	'CIMARRON - DRAPER LAKE 345KV CKT 1'	717	0.212	108.44	'BLANCHARD - MAUD 138KV CKT 1'
13WP	00NR	2	'FROM->TO'	G11_054	'CIMARRON - DRAPER LAKE 345KV CKT 1'	717	0.211	101.51	'MATTHEWSON 345.00 - TATONGA7 345.00 345KV CKT 1'
13WP	00NR	2	'FROM->TO'	G11_054	'CIMARRON - DRAPER LAKE 345KV CKT 1'	717	0.211	101.51	'MATTHEWSON 345.00 - TATONGA7 345.00 345KV CKT 2'
13WP	00NR	2	'FROM->TO'	G11_054	'CIMARRON - DRAPER LAKE 345KV CKT 1'	717	0.211	108.56	'KETCH TAP - NORTHWEST 138KV CKT 1'
17WP	00NR	2	'FROM->TO'	G11_054	'CIMARRON - DRAPER LAKE 345KV CKT 1'	717	0.211	103.96	'CLEVELAND - TULSA NORTH 345KV CKT 1'
13WP	00NR	2	'FROM->TO'	G11_054	'CIMARRON - DRAPER LAKE 345KV CKT 1'	717	0.211	110.32	'NORTHWEST (NORTWST3) 345/138/13.8KV TRANSFORMER CKT 1'
13WP	00NR	2	'FROM->TO'	G11_054	'CIMARRON - DRAPER LAKE 345KV CKT 1'	717	0.211	108.57	'OGE3TERM11'
13WP	00NR	2	'FROM->TO'	G11_054	'CIMARRON - DRAPER LAKE 345KV CKT 1'	717	0.211	108.86	'QUAIL CREEK - SKYLINE 138KV CKT 1'
13WP	00NR	2	'FROM->TO'	G11_054	'CIMARRON - DRAPER LAKE 345KV CKT 1'	717	0.211	106.41	'G08-13T 345.00 - SUMNERCO 345.00 345KV CKT 1'
13WP	00NR	2	'FROM->TO'	G11_054	'CIMARRON - DRAPER LAKE 345KV CKT 1'	717	0.211	106.24	'G08-13T 345.00 - WOODRING 345KV CKT 1'
13WP	00NR	2	'FROM->TO'	G11_054	'CIMARRON - DRAPER LAKE 345KV CKT 1'	717	0.211	103.97	'G11_051T 345.00 - WOODWARD DISTRICT EHV 345KV CKT 1'
13WP	00NR	2	'FROM->TO'	G11_054	'CIMARRON - DRAPER LAKE 345KV CKT 1'	717	0.211	103.71	'TATONGA7 345.00 - WOODWARD DISTRICT EHV 345KV CKT 2'
13WP	00NR	2	'FROM->TO'	G11_054	'CIMARRON - DRAPER LAKE 345KV CKT 1'	717	0.211	103.38	'G11_051T 345.00 - TATONGA7 345.00 345KV CKT 1'
13WP	00NR	2	'FROM->TO'	G11_054	'CIMARRON - DRAPER LAKE 345KV CKT 1'	717	0.211	109.48	'HORSESHOE LAKE - JONES TAP 138KV CKT 1'
13WP	00NR	2	'FROM->TO'	G11_054	'CIMARRON - DRAPER LAKE 345KV CKT 1'	717	0.211	108.80	'SUNSHINE CANYON - WESTMOORE 138KV CKT 1'
13WP	00NR	2	'FROM->TO'	G11_054	'CIMARRON - DRAPER LAKE 345KV CKT 1'	717	0.211	108.18	'FRANKLIN SW - WESTMOORE 138KV CKT 1'
13WP	00NR	2	'FROM->TO'	G11_054	'CIMARRON - DRAPER LAKE 345KV CKT 1'	717	0.211	106.81	'FOREST HILL - MAUD 138KV CKT 1'
13WP	00NR	2	'FROM->TO'	G11_054	'CIMARRON - DRAPER LAKE 345KV CKT 1'	717	0.211	111.04	'CANEYRV7 345.00 - NEOSHO 345KV CKT 1'
13WP	00NR	2	'FROM->TO'	G11_054	'CIMARRON - DRAPER LAKE 345KV CKT 1'	717	0.211	110.89	'CANEYRV7 345.00 - LATHAMS7 345.00 345KV CKT 1'
13WP	00NR	2	'FROM->TO'	G11_054	'CIMARRON - DRAPER LAKE 345KV CKT 1'	717	0.211	110.35	'LATHAMS7 345.00 - ROSE HILL 345KV CKT 1'
13WP	00NR	2	'FROM->TO'	G11_054	'CIMARRON - DRAPER LAKE 345KV CKT 1'	717	0.211	108.56	'OGE3TERM20'
17WP	00NR	2	'FROM->TO'	G11_054	'CIMARRON - DRAPER LAKE 345KV CKT 1'	717	0.211	100.00	'JOHNSON COUNTY - SUNNYSIDE 345KV CKT 1'
13WP	00NR	2	'FROM->TO'	G11_054	'CIMARRON - DRAPER LAKE 345KV CKT 1'	717	0.211	109.13	'NORTHEAST STATION - ONETA 345KV CKT 1'
13WP	00NR	2	'FROM->TO'	G11_054	'CIMARRON - DRAPER LAKE 345KV CKT 1'	717	0.211	112.16	'DBL-WICH-THI'
13WP	00NR	2	'FROM->TO'	G11_054	'CIMARRON - DRAPER LAKE 345KV CKT 1'	717	0.211	106.97	'MUSKOGEE - PECAN CREEK 345KV CKT 2'
13WP	00NR	2	'FROM->TO'	G11_054	'CIMARRON - DRAPER LAKE 345KV CKT 1'	717	0.211	108.98	'MEMORIAL - SKYLINE 138KV CKT 1'
13WP	00NR	2	'FROM->TO'	G11_054	'CIMARRON - DRAPER LAKE 345KV CKT 1'	717	0.211	110.50	'ANADARKO - POCASSETT 138KV CKT 1'
13WP	00NR	2	'FROM->TO'	G11_054	'CIMARRON - DRAPER LAKE 345KV CKT 1'	717	0.211	110.33	'POCASSETT - TUTTLE 138KV CKT 1'
13WP	00NR	2	'FROM->TO'	G11_054	'CIMARRON - DRAPER LAKE 345KV CKT 1'	717	0.211	109.89	'SUNSHINE CANYON - TUTTLE 138KV CKT 1'
13WP	00NR	2	'FROM->TO'	G11_054	'CIMARRON - DRAPER LAKE 345KV CKT 1'	717	0.211	108.65	'DIVISION AVE - LAKESIDE 138KV CKT 1'
13WP	00NR	2	'FROM->TO'	G11_054	'CIMARRON - DRAPER LAKE 345KV CKT 1'	717	0.211	108.53	'HEFNER - LAKESIDE 138KV CKT 1'
13WP	00NR	2	'FROM->TO'	G11_054	'CIMARRON - DRAPER LAKE 345KV CKT 1'	717	0.211	107.91	'DALE - HORSESHOE LAKE 138KV CKT 1'
13WP	00NR	2	'FROM->TO'	G11_054	'CIMARRON - DRAPER LAKE 345KV CKT 1'	717	0.211	107.98	'WOODRING (WOODRNG2) 345/138/13.8KV TRANSFORMER CKT 1'
13WP	00NR	2	'FROM->TO'	G11_054	'CIMARRON - DRAPER LAKE 345KV CKT 1'	717	0.211	108.10	'DAYTON - MUSTANG 138KV CKT 1'
13WP	00NR	2	'FROM->TO'	G11_054	'CIMARRON - DRAPER LAKE 345KV CKT 1'	717	0.211	108.10	'DAYTON - HOBBY LOBBY 138KV CKT 1'
13WP	00NR	2	'FROM->TO'	G11_054	'CIMARRON - DRAPER LAKE 345KV CKT 1'	717	0.211	108.05	'36 & MERIDIAN - HOBBY LOBBY 138KV CKT 1'
13WP	00NR	2	'FROM->TO'	G11_054	'CIMARRON - DRAPER LAKE 345KV CKT 1'	717	0.211	106.35	'OAKCREEK - WILD MARY 138KV CKT 1'
13WP	00NR	2	'FROM->TO'	G11_054	'CIMARRON - DRAPER LAKE 345KV CKT 1'	717	0.211	106.09	'AIRDEPT4 138.00 - WILD MARY 138KV CKT 1'

SEASON	GROUP	SCENARIO	DIRECTION	SOURCE	MONITORED ELEMENT	RATE B (MVA)	TDF	(%MVA) LOADING	CONTINGENCY
13WP	00NR	2	'FROM->TO'	G11_054	'CIMARRON - DRAPER LAKE 345KV CKT 1'	717	0.211	106.09	'AIRDEPT4 138.00 - GM 138KV CKT 1'
13WP	00NR	2	'FROM->TO'	G11_054	'CIMARRON - DRAPER LAKE 345KV CKT 1'	717	0.211	105.81	'DRAPER LAKE - GM 138KV CKT 1'
17WP	00NR	2	'FROM->TO'	G11_054	'CIMARRON - DRAPER LAKE 345KV CKT 1'	717	0.211	100.34	'REDBUD - RIVERSIDE STATION 345KV CKT 1'
13WP	00NR	2	'FROM->TO'	G11_054	'CIMARRON - DRAPER LAKE 345KV CKT 1'	717	0.211	106.90	'WESTMOORE - WILROGR4 138KV CKT 1'
13WP	00NR	2	'FROM->TO'	G11_054	'CIMARRON - DRAPER LAKE 345KV CKT 1'	717	0.211	108.72	'THISTLE 7 345.00 - WOODWARD DISTRICT EHV 345KV CKT 1'
13WP	00NR	2	'FROM->TO'	G11_054	'CIMARRON - DRAPER LAKE 345KV CKT 1'	717	0.211	108.72	'THISTLE 7 345.00 - WOODWARD DISTRICT EHV 345KV CKT 2'
13WP	00NR	2	'FROM->TO'	G11_054	'CIMARRON - DRAPER LAKE 345KV CKT 1'	717	0.211	108.89	'HUGO - SUNNYSIDE 345KV CKT 1'
13WP	00NR	2	'FROM->TO'	G11_054	'CIMARRON - DRAPER LAKE 345KV CKT 1'	717	0.211	106.59	'MAUD - SEMINOLE 138KV CKT 1'
17WP	00NR	2	'FROM->TO'	G11_054	'CIMARRON - DRAPER LAKE 345KV CKT 1'	717	0.211	101.34	'DBL-THIS-WWR'
13WP	00NR	2	'FROM->TO'	G11_054	'CIMARRON - DRAPER LAKE 345KV CKT 1'	717	0.211	105.07	'CHAMBER SPRINGS - CLARKSVILLE 345KV CKT 1'
13WP	00NR	2	'FROM->TO'	G11_054	'CIMARRON - DRAPER LAKE 345KV CKT 1'	717	0.211	108.23	'CIVIT - PAOLI 138KV CKT 1'
13WP	00NR	2	'FROM->TO'	G11_054	'CIMARRON - DRAPER LAKE 345KV CKT 1'	717	0.211	108.17	'CIVIT - STRATFORD 138KV CKT 1'
13WP	00NR	2	'FROM->TO'	G11_054	'CIMARRON - DRAPER LAKE 345KV CKT 1'	717	0.211	108.12	'OIL CENTER - STRATFORD 138KV CKT 1'
13WP	00NR	2	'FROM->TO'	G11_054	'CIMARRON - DRAPER LAKE 345KV CKT 1'	717	0.211	108.05	'LATTA JCT - OIL CENTER 138KV CKT 1'
13WP	00NR	2	'FROM->TO'	G11_054	'CIMARRON - DRAPER LAKE 345KV CKT 1'	717	0.211	107.91	'LASALLE - LATTA JCT 138KV CKT 1'
13WP	00NR	2	'FROM->TO'	G11_054	'CIMARRON - DRAPER LAKE 345KV CKT 1'	717	0.211	108.16	'HAMMETT TAP - HORSESHOE LAKE 138KV CKT 1'
13WP	00NR	2	'FROM->TO'	G11_054	'CIMARRON - DRAPER LAKE 345KV CKT 1'	717	0.211	108.87	'CORN TAP - PAOLI 138KV CKT 1'
13WP	00NR	2	'FROM->TO'	G11_054	'CIMARRON - DRAPER LAKE 345KV CKT 1'	717	0.211	107.98	'PENNSYLVANIA - SANTA FE 138KV CKT 1'
13WP	00NR	2	'FROM->TO'	G11_054	'CIMARRON - DRAPER LAKE 345KV CKT 1'	717	0.211	106.70	'DELAWARE - NORTHEAST STATION 345KV CKT 1'
13WP	00NR	2	'FROM->TO'	G11_054	'CIMARRON - DRAPER LAKE 345KV CKT 1'	717	0.211	103.99	'DBL-WWRD-BVR'
13WP	00NR	2	'FROM->TO'	G11_054	'CIMARRON - DRAPER LAKE 345KV CKT 1'	717	0.211	107.92	'SAPULPA ROAD - WEKIWA 345KV CKT 1'
13WP	00NR	2	'FROM->TO'	G11_054	'CIMARRON - DRAPER LAKE 345KV CKT 1'	717	0.210	108.50	'TULSA NORTH - WEKIWA 345KV CKT 1'
13WP	00NR	2	'FROM->TO'	G11_054	'CIMARRON - DRAPER LAKE 345KV CKT 1'	717	0.210	108.52	'LONEOAK - NORTHWEST 138KV CKT 1'
13WP	00NR	2	'FROM->TO'	G11_054	'CIMARRON - DRAPER LAKE 345KV CKT 1'	717	0.210	108.20	'LONEOAK - QUAIL CREEK 138KV CKT 1'
13WP	00NR	2	'FROM->TO'	G11_054	'CIMARRON - DRAPER LAKE 345KV CKT 1'	717	0.210	108.03	'BEAVER CO 345.00 - GRAY CO 345.00 345KV CKT 1'
13WP	00NR	2	'FROM->TO'	G11_054	'CIMARRON - DRAPER LAKE 345KV CKT 1'	717	0.210	108.29	'KETCH - KETCH TAP 138KV CKT 1'
13WP	00NR	2	'FROM->TO'	G11_054	'CIMARRON - DRAPER LAKE 345KV CKT 1'	717	0.210	108.00	'HEALDTON - LOCO 138KV CKT 1'
13WP	00NR	2	'FROM->TO'	G11_054	'CIMARRON - DRAPER LAKE 345KV CKT 1'	717	0.210	107.92	'HEALDTON - RINGLING 138KV CKT 1'
13WP	00NR	2	'FROM->TO'	G11_054	'CIMARRON - DRAPER LAKE 345KV CKT 1'	717	0.210	107.04	'HOLLYWOOD - MIDWEST TAP 138KV CKT 1'
13WP	00NR	2	'FROM->TO'	G11_054	'CIMARRON - DRAPER LAKE 345KV CKT 1'	717	0.210	108.81	'MINGO - RED WILLOW 345KV CKT 1'
13WP	00NR	2	'FROM->TO'	G11_054	'CIMARRON - DRAPER LAKE 345KV CKT 1'	717	0.210	108.43	'HUGO - VALLIANT 345KV CKT 1'
13WP	00NR	2	'FROM->TO'	G11_054	'CIMARRON - DRAPER LAKE 345KV CKT 1'	717	0.210	108.16	'ROSE HILL - SUMNERCO 345.00 345KV CKT 1'
13WP	00NR	2	'FROM->TO'	G11_054	'CIMARRON - DRAPER LAKE 345KV CKT 1'	717	0.210	106.78	'OGE3TERM33'
13WP	00NR	2	'FROM->TO'	G11_054	'CIMARRON - DRAPER LAKE 345KV CKT 1'	717	0.210	105.78	'FT SMITH - MUSKOGEE 345KV CKT 1'
13WP	00NR	2	'FROM->TO'	G11_054	'CIMARRON - DRAPER LAKE 345KV CKT 1'	717	0.210	111.18	'ANDERSONCO 345.00 - LACYGNE 345KV CKT 1'
13WP	00NR	2	'FROM->TO'	G11_054	'CIMARRON - DRAPER LAKE 345KV CKT 1'	717	0.210	111.06	'ANDERSONCO 345.00 - WOLF CREEK 345KV CKT 1'
13WP	00NR	2	'FROM->TO'	G11_054	'CIMARRON - DRAPER LAKE 345KV CKT 1'	717	0.210	109.00	'LACYGNE - NEOSHO 345KV CKT 1'
13WP	00NR	2	'FROM->TO'	G11_054	'CIMARRON - DRAPER LAKE 345KV CKT 1'	717	0.210	108.36	'DIVISION AVE - MUSTANG 138KV CKT 1'
13WP	00NR	2	'FROM->TO'	G11_054	'CIMARRON - DRAPER LAKE 345KV CKT 1'	717	0.210	108.05	'OUMED 4 - STONEWALL 138KV CKT 1'
13WP	00NR	2	'FROM->TO'	G11_054	'CIMARRON - DRAPER LAKE 345KV CKT 1'	717	0.210	107.99	'OUMED 4 - PARK PLACE 138KV CKT 1'
13WP	00NR	2	'FROM->TO'	G11_054	'CIMARRON - DRAPER LAKE 345KV CKT 1'	717	0.210	108.29	'GRAY CO 345.00 - SPEARVILLE 345KV CKT 1'
13WP	00NR	2	'FROM->TO'	G11_054	'CIMARRON - DRAPER LAKE 345KV CKT 1'	717	0.210	107.94	'COUNCIL - MUSTANG 138KV CKT 1'
13WP	00NR	2	'FROM->TO'	G11_054	'CIMARRON - DRAPER LAKE 345KV CKT 1'	717	0.210	106.93	'ARBUCKLE - VANOSS 138KV CKT 1'
13WP	00NR	2	'FROM->TO'	G11_054	'CIMARRON - DRAPER LAKE 345KV CKT 1'	717	0.210	108.73	'MINGO - SETAB 345KV CKT 1'
13WP	00NR	2	'FROM->TO'	G11_054	'CIMARRON - DRAPER LAKE 345KV CKT 1'	717	0.210	108.27	'COMANCHE - LOCO 138KV CKT 1'
13WP	00NR	2	'FROM->TO'	G11_054	'CIMARRON - DRAPER LAKE 345KV CKT 1'	717	0.210	105.96	'BEAVER CO 345.00 - WOODWARD DISTRICT EHV 345KV CKT 1'
13WP	00NR	2	'FROM->TO'	G11_054	'CIMARRON - DRAPER LAKE 345KV CKT 1'	717	0.210	108.98	'BLACKBERRY - NEOSHO 345KV CKT 1'
13WP	00NR	2	'FROM->TO'	G11_054	'CIMARRON - DRAPER LAKE 345KV CKT 1'	717	0.210	106.42	'PARK LANE - SEMINOLE 138KV CKT 1'
13WP	00NR	2	'FROM->TO'	G11_054	'CIMARRON - DRAPER LAKE 345KV CKT 1'	717	0.210	109.44	'AXTELL - POST ROCK 345KV CKT 1'
13WP	00NR	2	'FROM->TO'	G11_054	'CIMARRON - DRAPER LAKE 345KV CKT 1'	717	0.210	108.75	'OGE3TERM17'
13WP	00NR	2	'FROM->TO'	G11_054	'CIMARRON - DRAPER LAKE 345KV CKT 1'	717	0.210	108.57	'EMPORIA ENERGY CENTER - WICHITA 345KV CKT 1'
13WP	00NR	2	'FROM->TO'	G11_054	'CIMARRON - DRAPER LAKE 345KV CKT 1'	717	0.210	108.10	'DBL-FINY-HOL'
13WP	00NR	2	'FROM->TO'	G11_054	'CIMARRON - DRAPER LAKE 345KV CKT 1'	717	0.210	108.06	'FINNEY SWITCHING STATION - STEVENSCO 345.00 345KV CKT 1'
13WP	00NR	2	'FROM->TO'	G11_054	'CIMARRON - DRAPER LAKE 345KV CKT 1'	717	0.210	108.81	'THISTLE 7 345.00 - WICHITA 345KV CKT 1'
13WP	00NR	2	'FROM->TO'	G11_054	'CIMARRON - DRAPER LAKE 345KV CKT 1'	717	0.210	108.81	'THISTLE 7 345.00 - WICHITA 345KV CKT 2'
13WP	00NR	2	'FROM->TO'	G11_054	'CIMARRON - DRAPER LAKE 345KV CKT 1'	717	0.210	106.92	'DISCVRY - FOSTER 138KV CKT 1'
13WP	00NR	2	'FROM->TO'	G11_054	'CIMARRON - DRAPER LAKE 345KV CKT 1'	717	0.210	106.75	'DISCVRY - OAKCREEK 138KV CKT 1'
13WP	00NR	2	'FROM->TO'	G11_054	'CIMARRON - DRAPER LAKE 345KV CKT 1'	717	0.210	108.23	'BENTON - WICHITA 345KV CKT 1'
13WP	00NR	2	'FROM->TO'	G11_054	'CIMARRON - DRAPER LAKE 345KV CKT 1'	717	0.210	107.94	'5LOCSTGV - MAID 161KV CKT 1'
13WP	00NR	2	'FROM->TO'	G11_054	'CIMARRON - DRAPER LAKE 345KV CKT 1'	717	0.210	107.93	'5CDRCRST 161.00 - 5LOCSTGV 161KV CKT 1'
13WP	00NR	2	'FROM->TO'	G11_054	'CIMARRON - DRAPER LAKE 345KV CKT 1'	717	0.210	107.95	'HEFNER - TULSA 138KV CKT 1'
13WP	00NR	2	'FROM->TO'	G11_054	'CIMARRON - DRAPER LAKE 345KV CKT 1'	717	0.210	108.38	'HOLCOMB - SETAB 345KV CKT 1'
13WP	00NR	2	'FROM->TO'	G11_054	'CIMARRON - DRAPER LAKE 345KV CKT 1'	717	0.210	109.52	'OGE3TERM14'
13WP	00NR	2	'FROM->TO'	G11_054	'CIMARRON - DRAPER LAKE 345KV CKT 1'	717	0.210	108.40	'NORTHWEST - PANTHER 138KV CKT 1'
13WP	00NR	2	'FROM->TO'	G11_054	'CIMARRON - DRAPER LAKE 345KV CKT 1'	717	0.210	108.40	'OGE3TERM13'
13WP	00NR	2	'FROM->TO'	G11_054	'CIMARRON - DRAPER LAKE 345KV CKT 1'	717	0.210	108.36	'PANTHER - SILVER LAKE 138KV CKT 1'
13WP	00NR	2	'FROM->TO'	G11_054	'CIMARRON - DRAPER LAKE 345KV CKT 1'	717	0.210	108.48	'OVERTON-TRF'
13WP	00NR	2	'FROM->TO'	G11_054	'CIMARRON - DRAPER LAKE 345KV CKT 1'	717	0.210	107.98	'EL RENO SW - MUSTANG 69KV CKT 1'
13WP	00NR	2	'FROM->TO'	G11_054	'CIMARRON - DRAPER LAKE 345KV CKT 1'	717	0.210	107.98	'ANADARKO - BLANCHARD 69KV CKT 1'
13WP	00NR	2	'FROM->TO'	G11_054	'CIMARRON - DRAPER LAKE 345KV CKT 1'	717	0.210	109.30	'G11-17T 345.00 - POST ROCK 345KV CKT 1'
13WP	00NR	2	'FROM->TO'	G11_054	'CIMARRON - DRAPER LAKE 345KV CKT 1'	717	0.210	108.57	'7OVERTON 345.00 - SIBLEY 345KV CKT 1'
13WP	00NR	2	'FROM->TO'	G11_054	'CIMARRON - DRAPER LAKE 345KV CKT 1'	717	0.210	108.46	'SWISSVALE - WEST GARDNER 345KV CKT 1'
13WP	00NR	2	'FROM->TO'	G11_054	'CIMARRON - DRAPER LAKE 345KV CKT 1'	717	0.210	106.96	'SEMINOLE - VANOSS 138KV CKT 1'
13WP	00NR	2	'FROM->TO'	G11_054	'CIMARRON - DRAPER LAKE 345KV CKT 1'	717	0.210	108.19	'HAMMETT TAP - HAMMETT2 138KV CKT 1'
13WP	00NR	2	'FROM->TO'	G11_054	'CIMARRON - DRAPER LAKE 345KV CKT 1'	717	0.210	108.07	'HAMMETT2 - MEEKER 138KV CKT 1'
13WP	00NR	2	'FROM->TO'	G11_054	'CIMARRON - DRAPER LAKE 345KV CKT 1'	717	0.210	108.17	'ANADARKO - GEORGIA 138KV CKT 1'
13WP	00NR	2	'FROM->TO'	G11_054	'CIMARRON - DRAPER LAKE 345KV CKT 1'	717	0.210	108.13	'FLETCHER - GEORGIA 138KV CKT 1'
13WP	00NR	2	'FROM->TO'	G11_054	'CIMARRON - DRAPER LAKE 345KV CKT 1'	717	0.210	109.17	'WRTOD400'

SEASON	GROUP	SCENARIO	DIRECTION	SOURCE	MONITORED ELEMENT	RATE B (MVA)	TDF	(%MVA) LOADING	CONTINGENCY
13WP	00NR	2	'FROM->TO'	G11_054	'CIMARRON - DRAPER LAKE 345KV CKT 1'	717	0.210	108.21	'EMPORIA ENERGY CENTER - SWISSVALE 345KV CKT 1'
13WP	00NR	2	'FROM->TO'	G11_054	'CIMARRON - DRAPER LAKE 345KV CKT 1'	717	0.210	108.05	'CHERRY CREEK - PLEASANT VALLEY 138KV CKT 1'
13WP	00NR	2	'FROM->TO'	G11_054	'CIMARRON - DRAPER LAKE 345KV CKT 1'	717	0.210	108.00	'EMPIRE - FLETCHER 138KV CKT 1'
13WP	00NR	2	'FROM->TO'	G11_054	'CIMARRON - DRAPER LAKE 345KV CKT 1'	717	0.210	107.93	'COMANCHE - EMPIRE 138KV CKT 1'
13WP	00NR	2	'FROM->TO'	G11_054	'CIMARRON - DRAPER LAKE 345KV CKT 1'	717	0.210	107.92	'BOYD - CHERRY CREEK 138KV CKT 1'
13WP	00NR	2	'FROM->TO'	G11_054	'CIMARRON - DRAPER LAKE 345KV CKT 1'	717	0.210	109.08	'HOYT - JEFFREY ENERGY CENTER 345KV CKT 1'
13WP	00NR	2	'FROM->TO'	G11_054	'CIMARRON - DRAPER LAKE 345KV CKT 1'	717	0.210	108.97	'DBL-MULG-CIR'
13WP	00NR	2	'FROM->TO'	G11_054	'CIMARRON - DRAPER LAKE 345KV CKT 1'	717	0.210	108.94	'DBL-SPRVL-MU'
13WP	00NR	2	'FROM->TO'	G11_054	'CIMARRON - DRAPER LAKE 345KV CKT 1'	717	0.210	108.69	'HOYT - STRANGER CREEK 345KV CKT 1'
13WP	00NR	2	'FROM->TO'	G11_054	'CIMARRON - DRAPER LAKE 345KV CKT 1'	717	0.210	108.31	'OGE3TERM19'
13WP	00NR	2	'FROM->TO'	G11_054	'CIMARRON - DRAPER LAKE 345KV CKT 1'	717	0.210	108.26	'CLEVELAND (CLVAUTO1) 345/138/13.8KV TRANSFORMER CKT 1'
13WP	00NR	2	'FROM->TO'	G11_054	'CIMARRON - DRAPER LAKE 345KV CKT 1'	717	0.210	106.81	'CANADIAN RIVER - MCALESTER SOUTH 138KV CKT 1'
13WP	00NR	2	'FROM->TO'	G11_054	'CIMARRON - DRAPER LAKE 345KV CKT 1'	717	0.210	106.80	'CANADIAN RIVER () 345/138/13.8KV TRANSFORMER CKT 1'
13WP	00NR	2	'FROM->TO'	G11_054	'CIMARRON - DRAPER LAKE 345KV CKT 1'	717	0.210	108.06	'RENO COUNTY - SUMMIT 345KV CKT 1'
13WP	00NR	2	'FROM->TO'	G11_054	'CIMARRON - DRAPER LAKE 345KV CKT 1'	717	0.210	106.53	'KEO EHV - WEST MEMPHIS 500 500KV CKT 1'
13WP	00NR	2	'FROM->TO'	G11_054	'CIMARRON - DRAPER LAKE 345KV CKT 1'	717	0.210	106.90	'8BHAM STEEL 500.00 - WEST MEMPHIS 500 500KV CKT 1'
13WP	00NR	2	'FROM->TO'	G11_054	'CIMARRON - DRAPER LAKE 345KV CKT 1'	717	0.210	106.89	'AMRN_OUTS5'
13WP	00NR	2	'FROM->TO'	G11_054	'CIMARRON - DRAPER LAKE 345KV CKT 1'	717	0.210	106.98	'ROSE HILL - WOLF CREEK 345KV CKT 1'
13WP	00NR	2	'FROM->TO'	G11_054	'CIMARRON - DRAPER LAKE 345KV CKT 1'	717	0.210	106.91	'ARKANSAS NUCLEAR ONE - PLEASANT HILL 500KV CKT 1'
13WP	00NR	2	'FROM->TO'	G11_054	'CIMARRON - DRAPER LAKE 345KV CKT 1'	717	0.210	106.81	'Hitchland Interchange - WOODWARD DISTRICT EHV 345KV CKT 2'
13WP	00NR	2	'FROM->TO'	G11_054	'CIMARRON - DRAPER LAKE 345KV CKT 1'	717	0.210	109.42	'OGE3TERM12'
13WP	00NR	2	'FROM->TO'	G11_054	'CIMARRON - DRAPER LAKE 345KV CKT 1'	717	0.210	108.24	'AXTELL - PAULINE 345KV CKT 1'
13WP	00NR	2	'FROM->TO'	G11_054	'CIMARRON - DRAPER LAKE 345KV CKT 1'	717	0.210	106.54	'DELL 500 - INDEPENDENCE 500KV CKT 1'
13WP	00NR	2	'FROM->TO'	G11_054	'CIMARRON - DRAPER LAKE 345KV CKT 1'	717	0.210	108.50	'GRAND ISLAND - SWEETWATER 345KV CKT 1'
13WP	00NR	2	'FROM->TO'	G11_054	'CIMARRON - DRAPER LAKE 345KV CKT 1'	717	0.210	108.09	'MOORE - PAULINE 345KV CKT 1'
13WP	00NR	2	'FROM->TO'	G11_054	'CIMARRON - DRAPER LAKE 345KV CKT 1'	717	0.210	108.06	'OGE3TERM28'
13WP	00NR	2	'FROM->TO'	G11_054	'CIMARRON - DRAPER LAKE 345KV CKT 1'	717	0.210	108.03	'CLEO CORNER - MEN TAP 138KV CKT 1'
13WP	00NR	2	'FROM->TO'	G11_054	'CIMARRON - DRAPER LAKE 345KV CKT 1'	717	0.210	108.02	'IMO TAP - MEN TAP 138KV CKT 1'
13WP	00NR	2	'FROM->TO'	G11_054	'CIMARRON - DRAPER LAKE 345KV CKT 1'	717	0.210	106.76	'DBL-CLRK-G11'
13WP	00NR	2	'FROM->TO'	G11_054	'CIMARRON - DRAPER LAKE 345KV CKT 1'	717	0.210	106.50	'BORDER 7345.00 - WOODWARD DISTRICT EHV 345KV CKT 1'
13WP	00NR	2	'FROM->TO'	G11_054	'CIMARRON - DRAPER LAKE 345KV CKT 1'	717	0.210	106.33	'DBL-THIS-CLR'
13WP	00NR	2	'FROM->TO'	G11_054	'CIMARRON - DRAPER LAKE 345KV CKT 1'	717	0.210	108.21	'AI43'
13WP	00NR	2	'FROM->TO'	G11_054	'CIMARRON - DRAPER LAKE 345KV CKT 1'	717	0.210	108.21	'7LUTESVIL 345.00 - 7ST FRANC 345.00 345KV CKT 1'
13WP	00NR	2	'FROM->TO'	G11_054	'CIMARRON - DRAPER LAKE 345KV CKT 1'	717	0.210	108.12	'CLINTON - MONTROSE 161KV CKT 1'
13WP	00NR	2	'FROM->TO'	G11_054	'CIMARRON - DRAPER LAKE 345KV CKT 1'	717	0.210	108.03	'GLASS MOUNTAIN - MOORELAND 138KV CKT 1'
13WP	00NR	2	'FROM->TO'	G11_054	'CIMARRON - DRAPER LAKE 345KV CKT 1'	717	0.210	108.03	'CLEO CORNER - GLASS MOUNTAIN 138KV CKT 1'
13WP	00NR	2	'FROM->TO'	G11_054	'CIMARRON - DRAPER LAKE 345KV CKT 1'	717	0.210	107.97	'NEOSHO (NEOSHO2X) 345/161/13.8KV TRANSFORMER CKT 1'
13WP	00NR	2	'FROM->TO'	G11_054	'CIMARRON - DRAPER LAKE 345KV CKT 1'	717	0.210	108.27	'7JASPER 345.00 - MORGAN 345KV CKT 1'
13WP	00NR	2	'FROM->TO'	G11_054	'CIMARRON - DRAPER LAKE 345KV CKT 1'	717	0.210	108.18	'GRDA-OPGD-05'
13WP	00NR	2	'FROM->TO'	G11_054	'CIMARRON - DRAPER LAKE 345KV CKT 1'	717	0.210	106.74	'BAXTER WILSON SES - PERRYVILLE 500KV CKT 1'
13WP	00NR	2	'FROM->TO'	G11_054	'CIMARRON - DRAPER LAKE 345KV CKT 1'	717	0.210	108.50	'FAIRFAX TAP - SHIDLER 138KV CKT 1'
13WP	00NR	2	'FROM->TO'	G11_054	'CIMARRON - DRAPER LAKE 345KV CKT 1'	717	0.210	108.46	'SHIDLER - WEST PAWHUSKA 138KV CKT 1'
13WP	00NR	2	'FROM->TO'	G11_054	'CIMARRON - DRAPER LAKE 345KV CKT 1'	717	0.210	108.46	'PAWHUSKA TAP - WEST PAWHUSKA 138KV CKT 1'
13WP	00NR	2	'FROM->TO'	G11_054	'CIMARRON - DRAPER LAKE 345KV CKT 1'	717	0.210	108.41	'DOMES - PAWHUSKA TAP 138KV CKT 1'
13WP	00NR	2	'FROM->TO'	G11_054	'CIMARRON - DRAPER LAKE 345KV CKT 1'	717	0.210	108.39	'DOMES - MOUND ROAD 138KV CKT 1'
13WP	00NR	2	'FROM->TO'	G11_054	'CIMARRON - DRAPER LAKE 345KV CKT 1'	717	0.210	108.24	'7JASPER 345.00 - BLACKBERRY 345KV CKT 1'
13WP	00NR	2	'FROM->TO'	G11_054	'CIMARRON - DRAPER LAKE 345KV CKT 1'	717	0.210	108.05	'ATCHSNT3 345.00 - BOONEVILLE 345KV CKT 1'
13WP	00NR	2	'FROM->TO'	G11_054	'CIMARRON - DRAPER LAKE 345KV CKT 1'	717	0.210	107.98	'ATCHSNT3 345.00 - COOPER 345KV CKT 1'
13WP	00NR	2	'FROM->TO'	G11_054	'CIMARRON - DRAPER LAKE 345KV CKT 1'	717	0.210	107.97	'ATC_B2_8E2'
13WP	00NR	2	'FROM->TO'	G11_054	'CIMARRON - DRAPER LAKE 345KV CKT 1'	717	0.210	106.93	'OSAGE - WEBB CITY TAP 138KV CKT 1'
13WP	00NR	2	'FROM->TO'	G11_054	'CIMARRON - DRAPER LAKE 345KV CKT 1'	717	0.210	106.75	'FAIRFAX TAP - WEBB CITY TAP 138KV CKT 1'
13WP	00NR	2	'FROM->TO'	G11_054	'CIMARRON - DRAPER LAKE 345KV CKT 1'	717	0.210	107.95	'LAKEOVER - MCADAMS 500KV CKT 1'
13WP	00NR	2	'FROM->TO'	G11_054	'CIMARRON - DRAPER LAKE 345KV CKT 1'	717	0.210	106.96	'OGE3TERM41'
13WP	00NR	2	'FROM->TO'	G11_054	'CIMARRON - DRAPER LAKE 345KV CKT 1'	717	0.210	106.90	'BAXTER WILSON SES - RAY BRASWELL SES 500KV CKT 1'
13WP	00NR	2	'FROM->TO'	G11_054	'CIMARRON - DRAPER LAKE 345KV CKT 1'	717	0.210	106.88	'G11_040_TAP 138.00 - POOLEVILLE 138KV CKT 1'
13WP	00NR	2	'FROM->TO'	G11_054	'CIMARRON - DRAPER LAKE 345KV CKT 1'	717	0.210	116.03	'GEN336821 1-GRAND GULF UNIT'
13WP	00NR	2	'FROM->TO'	G11_054	'CIMARRON - DRAPER LAKE 345KV CKT 1'	717	0.210	115.71	'GEN336153 1-WATERFORD UNIT#3'
13WP	00NR	2	'FROM->TO'	G11_054	'CIMARRON - DRAPER LAKE 345KV CKT 1'	717	0.210	114.57	'GEN337911 1-ARKANSAS NUCLEAR ONE UNIT #2'
13WP	00NR	2	'FROM->TO'	G11_054	'CIMARRON - DRAPER LAKE 345KV CKT 1'	717	0.210	114.50	'GEN335831 1-RIVERBEND UNIT#1'
13WP	00NR	2	'FROM->TO'	G11_054	'CIMARRON - DRAPER LAKE 345KV CKT 1'	717	0.210	113.64	'GEN501801 1-DOLET HILLS UNIT1'
13WP	00NR	2	'FROM->TO'	G11_054	'CIMARRON - DRAPER LAKE 345KV CKT 1'	717	0.210	113.40	'GEN337910 1-ARKANSAS NUCLEAR ONE UNIT #1'
13WP	00NR	2	'FROM->TO'	G11_054	'CIMARRON - DRAPER LAKE 345KV CKT 1'	717	0.210	113.14	'GEN520947 1-HUGO1'
13WP	00NR	2	'FROM->TO'	G11_054	'CIMARRON - DRAPER LAKE 345KV CKT 1'	717	0.210	112.60	'GEN337652 1-WHITE BLUFF UNIT #1'
13WP	00NR	2	'FROM->TO'	G11_054	'CIMARRON - DRAPER LAKE 345KV CKT 1'	717	0.210	112.49	'GEN515040 1-SEMINOLE 1G'
13WP	00NR	2	'FROM->TO'	G11_054	'CIMARRON - DRAPER LAKE 345KV CKT 1'	717	0.210	112.40	'GEN509403 1-PIRKEY GENERATION'
13WP	00NR	2	'FROM->TO'	G11_054	'CIMARRON - DRAPER LAKE 345KV CKT 1'	717	0.210	112.40	'GEN509416 1-TURK GENERATION'
13WP	00NR	2	'FROM->TO'	G11_054	'CIMARRON - DRAPER LAKE 345KV CKT 1'	717	0.210	112.30	'GEN337653 1-WHITE BLUFF UNIT #2'
13WP	00NR	2	'FROM->TO'	G11_054	'CIMARRON - DRAPER LAKE 345KV CKT 1'	717	0.210	112.28	'GEN515042 1-SEMINOLE 3G'
13WP	00NR	2	'FROM->TO'	G11_054	'CIMARRON - DRAPER LAKE 345KV CKT 1'	717	0.210	112.20	'GEN336251 1-NINEMILE POINT UNIT#4'
13WP	00NR	2	'FROM->TO'	G11_054	'CIMARRON - DRAPER LAKE 345KV CKT 1'	717	0.210	112.14	'GEN501813 1-RODEMACHER UNIT 3'
13WP	00NR	2	'FROM->TO'	G11_054	'CIMARRON - DRAPER LAKE 345KV CKT 1'	717	0.210	112.04	'GEN338146 1-INDEPENDENCE UNIT #2'
13WP	00NR	2	'FROM->TO'	G11_054	'CIMARRON - DRAPER LAKE 345KV CKT 1'	717	0.210	112.00	'GEN338143 1-INDEPENDENCE UNIT #1'
13WP	00NR	2	'FROM->TO'	G11_054	'CIMARRON - DRAPER LAKE 345KV CKT 1'	717	0.210	111.90	'GEN337041 1-GERALD ANDRUS'
13WP	00NR	2	'FROM->TO'	G11_054	'CIMARRON - DRAPER LAKE 345KV CKT 1'	717	0.210	111.65	'GEN515041 1-SEMINOLE 2G'
13WP	00NR	2	'FROM->TO'	G11_054	'CIMARRON - DRAPER LAKE 345KV CKT 1'	717	0.210	111.61	'GEN509406 1-WELSH #3'
13WP	00NR	2	'FROM->TO'	G11_054	'CIMARRON - DRAPER LAKE 345KV CKT 1'	717	0.210	111.61	'GEN509405 1-WELSH #2'
13WP	00NR	2	'FROM->TO'	G11_054	'CIMARRON - DRAPER LAKE 345KV CKT 1'	717	0.210	111.61	'GEN509404 1-WELSH #1'
13WP	00NR	2	'FROM->TO'	G11_054	'CIMARRON - DRAPER LAKE 345KV CKT 1'	717	0.210	111.60	'GEN501812 1-RODEMACHER UNIT 2'

SEASON	GROUP	SCENARIO	DIRECTION	SOURCE	MONITORED ELEMENT	RATE B (MVA)	TDF	(%MVA) LOADING	CONTINGENCY
13WP	00NR	2	'FROM->TO'	G11_054	'CIMARRON - DRAPER LAKE 345KV CKT 1'	717	0.210	111.59	'GEN334440 1-SABINE UNIT 4'
13WP	00NR	2	'FROM->TO'	G11_054	'CIMARRON - DRAPER LAKE 345KV CKT 1'	717	0.210	111.47	'GEN335206 1-NELSON UNIT 6'
13WP	00NR	2	'FROM->TO'	G11_054	'CIMARRON - DRAPER LAKE 345KV CKT 1'	717	0.210	111.34	'GEN515226 1-MUSKOGEE 6G'
13WP	00NR	2	'FROM->TO'	G11_054	'CIMARRON - DRAPER LAKE 345KV CKT 1'	717	0.210	111.25	'GEN336831 1-BAXTER WILSON SES'
13WP	00NR	2	'FROM->TO'	G11_054	'CIMARRON - DRAPER LAKE 345KV CKT 1'	717	0.210	111.12	'GEN334441 1-SABINE UNIT 5'
13WP	00NR	2	'FROM->TO'	G11_054	'CIMARRON - DRAPER LAKE 345KV CKT 1'	717	0.210	110.94	'GEN338388 1-1PLUMPT 23.000'
13WP	00NR	2	'FROM->TO'	G11_054	'CIMARRON - DRAPER LAKE 345KV CKT 1'	717	0.210	110.84	'GEN515223 1-MUSKOGEE 4G'
13WP	00NR	2	'FROM->TO'	G11_054	'CIMARRON - DRAPER LAKE 345KV CKT 1'	717	0.210	110.79	'GEN515225 1-MUSKOGEE 5G'
13WP	00NR	2	'FROM->TO'	G11_054	'CIMARRON - DRAPER LAKE 345KV CKT 1'	717	0.210	109.59	'GEN336170 1-GULF OXY U4'
13WP	00NR	2	'FROM->TO'	G11_054	'CIMARRON - DRAPER LAKE 345KV CKT 1'	717	0.210	109.41	'GEN334070 1-LEWIS CREEK 1'
13WP	00NR	2	'FROM->TO'	G11_054	'CIMARRON - DRAPER LAKE 345KV CKT 1'	717	0.210	109.38	'GEN334071 1-LEWIS CREEK 2'
13WP	00NR	2	'FROM->TO'	G11_054	'CIMARRON - DRAPER LAKE 345KV CKT 1'	717	0.210	109.24	'GEN300006 1-NEW MADRID UNIT 1'
13WP	00NR	2	'FROM->TO'	G11_054	'CIMARRON - DRAPER LAKE 345KV CKT 1'	717	0.210	109.22	'GEN300007 1-NEW MADRID UNIT 2'
13WP	00NR	2	'FROM->TO'	G11_054	'CIMARRON - DRAPER LAKE 345KV CKT 1'	717	0.210	109.11	'GEN514998 1-MCCLAIN UNIT 1'
13WP	00NR	2	'FROM->TO'	G11_054	'CIMARRON - DRAPER LAKE 345KV CKT 1'	717	0.210	109.10	'GEN334432 1-SABINE UNIT 2'
13WP	00NR	2	'FROM->TO'	G11_054	'CIMARRON - DRAPER LAKE 345KV CKT 1'	717	0.210	109.05	'GEN509394 1-FLINT CREEK'
13WP	00NR	2	'FROM->TO'	G11_054	'CIMARRON - DRAPER LAKE 345KV CKT 1'	717	0.210	109.03	'GEN334030 1-FRONTIER UNIT 1'
13WP	00NR	2	'FROM->TO'	G11_054	'CIMARRON - DRAPER LAKE 345KV CKT 1'	717	0.210	109.03	'GEN334031 1-FRONTIER UNIT 2'
13WP	00NR	2	'FROM->TO'	G11_054	'CIMARRON - DRAPER LAKE 345KV CKT 1'	717	0.210	109.02	'GEN509393 S1-ARSENAL HILL GENS #4 (STALL)'
13WP	00NR	2	'FROM->TO'	G11_054	'CIMARRON - DRAPER LAKE 345KV CKT 1'	717	0.210	109.02	'GEN334431 1-SABINE UNIT 1'
13WP	00NR	2	'FROM->TO'	G11_054	'CIMARRON - DRAPER LAKE 345KV CKT 1'	717	0.210	108.98	'GEN335612 1-WILLOW GLENN UNIT#2'
13WP	00NR	2	'FROM->TO'	G11_054	'CIMARRON - DRAPER LAKE 345KV CKT 1'	717	0.210	108.96	'GEN511843 1-RIVERSIDE STATION #2'
13WP	00NR	2	'FROM->TO'	G11_054	'CIMARRON - DRAPER LAKE 345KV CKT 1'	717	0.210	108.89	'GEN509391 G1-ARSENAL HILL GENS #2 (STALL)'
13WP	00NR	2	'FROM->TO'	G11_054	'CIMARRON - DRAPER LAKE 345KV CKT 1'	717	0.210	108.89	'GEN509392 G2-ARSENAL HILL GENS #3 (STALL)'
13WP	00NR	2	'FROM->TO'	G11_054	'CIMARRON - DRAPER LAKE 345KV CKT 1'	717	0.210	108.85	'GEN509408 1-WILKES #2'
13WP	00NR	2	'FROM->TO'	G11_054	'CIMARRON - DRAPER LAKE 345KV CKT 1'	717	0.210	108.83	'GEN512688 2-GRDA1 GSU2 22'
13WP	00NR	2	'FROM->TO'	G11_054	'CIMARRON - DRAPER LAKE 345KV CKT 1'	717	0.210	108.77	'GEN503909 1-FULTONU1 1 16.000'
13WP	00NR	2	'FROM->TO'	G11_054	'CIMARRON - DRAPER LAKE 345KV CKT 1'	717	0.210	108.73	'GEN337428 1-PERYVILLE UNIT #1'
13WP	00NR	2	'FROM->TO'	G11_054	'CIMARRON - DRAPER LAKE 345KV CKT 1'	717	0.210	108.73	'GEN337430 1-PERYVILLE UNIT #3'
13WP	00NR	2	'FROM->TO'	G11_054	'CIMARRON - DRAPER LAKE 345KV CKT 1'	717	0.210	108.71	'GEN512689 1-GRDA1 GSU1 22'
13WP	00NR	2	'FROM->TO'	G11_054	'CIMARRON - DRAPER LAKE 345KV CKT 1'	717	0.210	108.69	'GEN337429 1-PERYVILLE UNIT #2'
13WP	00NR	2	'FROM->TO'	G11_054	'CIMARRON - DRAPER LAKE 345KV CKT 1'	717	0.210	108.69	'GEN337432 1-PERYVILLE UNIT #5'
13WP	00NR	2	'FROM->TO'	G11_054	'CIMARRON - DRAPER LAKE 345KV CKT 1'	717	0.210	108.68	'GEN506752 1-LEBROCK GAS 1'
13WP	00NR	2	'FROM->TO'	G11_054	'CIMARRON - DRAPER LAKE 345KV CKT 1'	717	0.210	108.63	'GEN335075 1-DYNEGY#1'
13WP	00NR	2	'FROM->TO'	G11_054	'CIMARRON - DRAPER LAKE 345KV CKT 1'	717	0.210	108.62	'GEN336167 1-GULF OXY U1'
13WP	00NR	2	'FROM->TO'	G11_054	'CIMARRON - DRAPER LAKE 345KV CKT 1'	717	0.210	108.62	'GEN336168 1-GULF OXY U2'
13WP	00NR	2	'FROM->TO'	G11_054	'CIMARRON - DRAPER LAKE 345KV CKT 1'	717	0.210	108.62	'GEN336169 1-GULF OXY U3'
13WP	00NR	2	'FROM->TO'	G11_054	'CIMARRON - DRAPER LAKE 345KV CKT 1'	717	0.210	108.61	'GEN318007 1-5MOROW161 161.00'
13WP	00NR	2	'FROM->TO'	G11_054	'CIMARRON - DRAPER LAKE 345KV CKT 1'	717	0.210	108.61	'GEN335203 1-NELSON UNIT 3'
13WP	00NR	2	'FROM->TO'	G11_054	'CIMARRON - DRAPER LAKE 345KV CKT 1'	717	0.210	108.58	'GEN337421 1-OUCHITA CTG1'
13WP	00NR	2	'FROM->TO'	G11_054	'CIMARRON - DRAPER LAKE 345KV CKT 1'	717	0.210	108.58	'GEN337423 1-OUCHITA CTG2'
13WP	00NR	2	'FROM->TO'	G11_054	'CIMARRON - DRAPER LAKE 345KV CKT 1'	717	0.210	108.58	'GEN337425 1-OUCHITA CTG3'
13WP	00NR	2	'FROM->TO'	G11_054	'CIMARRON - DRAPER LAKE 345KV CKT 1'	717	0.210	108.56	'GEN511840 1-NORTHEASTERN STATION #3'
13WP	00NR	2	'FROM->TO'	G11_054	'CIMARRON - DRAPER LAKE 345KV CKT 1'	717	0.210	108.55	'GEN334392 1-EXXON MOBIL IPP 1'
13WP	00NR	2	'FROM->TO'	G11_054	'CIMARRON - DRAPER LAKE 345KV CKT 1'	717	0.210	108.54	'GEN511841 1-NORTHEASTERN STATION #4'
13WP	00NR	2	'FROM->TO'	G11_054	'CIMARRON - DRAPER LAKE 345KV CKT 1'	717	0.210	108.52	'GEN511839 1-NORTHEASTERN STATION #2'
13WP	00NR	2	'FROM->TO'	G11_054	'CIMARRON - DRAPER LAKE 345KV CKT 1'	717	0.210	108.48	'GEN337006 1-DUKE MCADAMS G1'
13WP	00NR	2	'FROM->TO'	G11_054	'CIMARRON - DRAPER LAKE 345KV CKT 1'	717	0.210	108.48	'GEN337007 1-DUKE MCADAMS G2'
13WP	00NR	2	'FROM->TO'	G11_054	'CIMARRON - DRAPER LAKE 345KV CKT 1'	717	0.210	108.46	'GEN337008 1-DUKE MCADAMS S1'
13WP	00NR	2	'FROM->TO'	G11_054	'CIMARRON - DRAPER LAKE 345KV CKT 1'	717	0.210	108.44	'GEN505432 1-SIKESTON'
13WP	00NR	2	'FROM->TO'	G11_054	'CIMARRON - DRAPER LAKE 345KV CKT 1'	717	0.210	108.41	'GEN338500 1-MCCLELLAN UNIT #1'
13WP	00NR	2	'FROM->TO'	G11_054	'CIMARRON - DRAPER LAKE 345KV CKT 1'	717	0.210	108.39	'8DANIEL 500.00 - MCKNIGHT 500KV CKT 1'
13WP	00NR	2	'FROM->TO'	G11_054	'CIMARRON - DRAPER LAKE 345KV CKT 1'	717	0.210	108.34	'GEN515266 1-AES 1G'
13WP	00NR	2	'FROM->TO'	G11_054	'CIMARRON - DRAPER LAKE 345KV CKT 1'	717	0.210	108.34	'GEN515267 1-AES 2G'
13WP	00NR	2	'FROM->TO'	G11_054	'CIMARRON - DRAPER LAKE 345KV CKT 1'	717	0.210	108.31	'GEN335611 1-WILLOW GLENN UNIT#1'
13WP	00NR	2	'FROM->TO'	G11_054	'CIMARRON - DRAPER LAKE 345KV CKT 1'	717	0.210	108.30	'GEN562053 1-G11_040_4 0.6900'
13WP	00NR	2	'FROM->TO'	G11_054	'CIMARRON - DRAPER LAKE 345KV CKT 1'	717	0.210	108.29	'GEN337954 1-LYNCH UNIT #3'
13WP	00NR	2	'FROM->TO'	G11_054	'CIMARRON - DRAPER LAKE 345KV CKT 1'	717	0.210	108.29	'GEN511938 1-OEC STEAM # 1'
13WP	00NR	2	'FROM->TO'	G11_054	'CIMARRON - DRAPER LAKE 345KV CKT 1'	717	0.210	108.27	'GEN335201 1-NELSON UNIT 1'
13WP	00NR	2	'FROM->TO'	G11_054	'CIMARRON - DRAPER LAKE 345KV CKT 1'	717	0.210	108.25	'GEN335202 1-NELSON UNIT 2'
13WP	00NR	2	'FROM->TO'	G11_054	'CIMARRON - DRAPER LAKE 345KV CKT 1'	717	0.210	108.23	'GEN336944 1-REX BROWN'
13WP	00NR	2	'FROM->TO'	G11_054	'CIMARRON - DRAPER LAKE 345KV CKT 1'	717	0.210	108.22	'OGE3TERM3'
13WP	00NR	2	'FROM->TO'	G11_054	'CIMARRON - DRAPER LAKE 345KV CKT 1'	717	0.210	108.22	'GEN506749 1-EASTMAN GENERATION A'
13WP	00NR	2	'FROM->TO'	G11_054	'CIMARRON - DRAPER LAKE 345KV CKT 1'	717	0.210	108.18	'GEN511842 1-RIVERSIDE STATION #1'
13WP	00NR	2	'FROM->TO'	G11_054	'CIMARRON - DRAPER LAKE 345KV CKT 1'	717	0.210	108.17	'GEN562052 1-G11_040_3 0.6900'
13WP	00NR	2	'FROM->TO'	G11_054	'CIMARRON - DRAPER LAKE 345KV CKT 1'	717	0.210	108.16	'GEN337422 1-OUCHITA STG1'
13WP	00NR	2	'FROM->TO'	G11_054	'CIMARRON - DRAPER LAKE 345KV CKT 1'	717	0.210	108.16	'GEN337424 1-OUCHITA STG2'
13WP	00NR	2	'FROM->TO'	G11_054	'CIMARRON - DRAPER LAKE 345KV CKT 1'	717	0.210	108.16	'GEN337426 1-OUCHITA STG3'
13WP	00NR	2	'FROM->TO'	G11_054	'CIMARRON - DRAPER LAKE 345KV CKT 1'	717	0.210	108.13	'GEN335137 C4-PPG'
13WP	00NR	2	'FROM->TO'	G11_054	'CIMARRON - DRAPER LAKE 345KV CKT 1'	717	0.210	108.13	'GEN338510 1-1S1KNWRI'
13WP	00NR	2	'FROM->TO'	G11_054	'CIMARRON - DRAPER LAKE 345KV CKT 1'	717	0.210	108.13	'GEN338511 1-1C7KNWRI'
13WP	00NR	2	'FROM->TO'	G11_054	'CIMARRON - DRAPER LAKE 345KV CKT 1'	717	0.210	108.11	'GEN338513 1-BAILEY UNIT #1'
13WP	00NR	2	'FROM->TO'	G11_054	'CIMARRON - DRAPER LAKE 345KV CKT 1'	717	0.210	108.11	'GEN300003 1-THOMAS HILL UNIT 3'
13WP	00NR	2	'FROM->TO'	G11_054	'CIMARRON - DRAPER LAKE 345KV CKT 1'	717	0.210	108.06	'GEN500915 3-WESTERN KRAFT'
13WP	00NR	2	'FROM->TO'	G11_054	'CIMARRON - DRAPER LAKE 345KV CKT 1'	717	0.210	108.05	'GEN549893 2-SOUTHWEST 2'
13WP	00NR	2	'FROM->TO'	G11_054	'CIMARRON - DRAPER LAKE 345KV CKT 1'	717	0.210	108.05	'GEN300015 1-1SGPDEL 18.000'
13WP	00NR	2	'FROM->TO'	G11_054	'CIMARRON - DRAPER LAKE 345KV CKT 1'	717	0.210	108.05	'GEN300016 1-1G1GPDEL 18.000'
13WP	00NR	2	'FROM->TO'	G11_054	'CIMARRON - DRAPER LAKE 345KV CKT 1'	717	0.210	108.05	'GEN300017 1-1G2GPDEL 18.000'

SEASON	GROUP	SCENARIO	DIRECTION	SOURCE	MONITORED ELEMENT	RATE B (MVA)	TDF	(%MVA) LOADING	CONTINGENCY
13WP	00NR	2	'FROM->TO'	G11_054	'CIMARRON - DRAPER LAKE 345KV CKT 1'	717	0.210	108.04	'GEN503900 1-FITZHUGH CT1'
13WP	00NR	2	'FROM->TO'	G11_054	'CIMARRON - DRAPER LAKE 345KV CKT 1'	717	0.210	108.03	'GEN501910 1-ACADIA UNIT ST1'
13WP	00NR	2	'FROM->TO'	G11_054	'CIMARRON - DRAPER LAKE 345KV CKT 1'	717	0.210	108.03	'GEN334335 1-TOLEDO BEND'
13WP	00NR	2	'FROM->TO'	G11_054	'CIMARRON - DRAPER LAKE 345KV CKT 1'	717	0.210	108.02	'GEN334467 1-DUPONT UNIT#1'
13WP	00NR	2	'FROM->TO'	G11_054	'CIMARRON - DRAPER LAKE 345KV CKT 1'	717	0.210	108.01	'GEN335546 3-DOW COGEN'
13WP	00NR	2	'FROM->TO'	G11_054	'CIMARRON - DRAPER LAKE 345KV CKT 1'	717	0.210	108.01	'GEN337124 5-LS POWER BATESVILLE'
13WP	00NR	2	'FROM->TO'	G11_054	'CIMARRON - DRAPER LAKE 345KV CKT 1'	717	0.210	107.99	'GEN318008 3-5MOSEL161 161.00'
13WP	00NR	2	'FROM->TO'	G11_054	'CIMARRON - DRAPER LAKE 345KV CKT 1'	717	0.210	107.99	'A059'
13WP	00NR	2	'FROM->TO'	G11_054	'CIMARRON - DRAPER LAKE 345KV CKT 1'	717	0.210	107.99	'EUREKA SPRIN'
13WP	00NR	2	'FROM->TO'	G11_054	'CIMARRON - DRAPER LAKE 345KV CKT 1'	717	0.210	107.98	'SHERIDAN EHV - WHITE BLUFF 500KV CKT 1'
13WP	00NR	2	'FROM->TO'	G11_054	'CIMARRON - DRAPER LAKE 345KV CKT 1'	717	0.210	107.97	'GEN336176 1-UNION CARBIDE COGEN GT1'
13WP	00NR	2	'FROM->TO'	G11_054	'CIMARRON - DRAPER LAKE 345KV CKT 1'	717	0.210	107.97	'GEN336177 1-UNION CARBIDE COGEN GT2'
13WP	00NR	2	'FROM->TO'	G11_054	'CIMARRON - DRAPER LAKE 345KV CKT 1'	717	0.210	107.95	'GEN509409 1-WILKES #3'
13WP	00NR	2	'FROM->TO'	G11_054	'CIMARRON - DRAPER LAKE 345KV CKT 1'	717	0.210	107.47	'BASE CASE'
13WP	00NR	2	'FROM->TO'	G11_054	'CIMARRON - DRAPER LAKE 345KV CKT 1'	717	0.210	107.06	'DRAPER LAKE - DRPCAPS4 138.00 138KV CKT 1'
13WP	00NR	2	'FROM->TO'	G11_054	'CIMARRON - DRAPER LAKE 345KV CKT 1'	717	0.210	106.96	'GEN532663 1-LAWRENCE ENERGY CENTER UNIT 5'
13WP	00NR	2	'FROM->TO'	G11_054	'CIMARRON - DRAPER LAKE 345KV CKT 1'	717	0.210	106.94	'GEN542957 1-IATAN UNIT #1'
13WP	00NR	2	'FROM->TO'	G11_054	'CIMARRON - DRAPER LAKE 345KV CKT 1'	717	0.210	106.93	'GEN542956 2-LACYGNE UNIT #2'
13WP	00NR	2	'FROM->TO'	G11_054	'CIMARRON - DRAPER LAKE 345KV CKT 1'	717	0.210	106.91	'GEN542955 1-LACYGNE UNIT #1'
13WP	00NR	2	'FROM->TO'	G11_054	'CIMARRON - DRAPER LAKE 345KV CKT 1'	717	0.210	106.90	'GEN542962 2-IATAN UNIT #2'
13WP	00NR	2	'FROM->TO'	G11_054	'CIMARRON - DRAPER LAKE 345KV CKT 1'	717	0.210	106.88	'NELSON - RICHARD 500KV CKT 1'
13WP	00NR	2	'FROM->TO'	G11_054	'CIMARRON - DRAPER LAKE 345KV CKT 1'	717	0.210	106.83	'GEN640009 1-COOPER NUCLEAR STATION'
13WP	00NR	2	'FROM->TO'	G11_054	'CIMARRON - DRAPER LAKE 345KV CKT 1'	717	0.210	106.75	'GEN562092 1-G11_058_4 0.6900'
13WP	00NR	2	'FROM->TO'	G11_054	'CIMARRON - DRAPER LAKE 345KV CKT 1'	717	0.210	106.72	'GEN562094 1-G11_058_5 0.6900'
13WP	00NR	2	'FROM->TO'	G11_054	'CIMARRON - DRAPER LAKE 345KV CKT 1'	717	0.210	106.66	'GEN562049 1-G11_012_3 0.6900'
13WP	00NR	2	'FROM->TO'	G11_054	'CIMARRON - DRAPER LAKE 345KV CKT 1'	717	0.210	106.66	'GEN523462 1-BLACKHAWK GEN #2'
13WP	00NR	2	'FROM->TO'	G11_054	'CIMARRON - DRAPER LAKE 345KV CKT 1'	717	0.210	106.66	'GEN523461 1-BLACKHAWK GEN #1'
13WP	00NR	2	'FROM->TO'	G11_054	'CIMARRON - DRAPER LAKE 345KV CKT 1'	717	0.210	106.62	'GEN560386 1-G10-029-1 0.6900'
13WP	00NR	2	'FROM->TO'	G11_054	'CIMARRON - DRAPER LAKE 345KV CKT 1'	717	0.210	106.62	'GEN560387 1-G10-029-2 0.6900'
13WP	00NR	2	'FROM->TO'	G11_054	'CIMARRON - DRAPER LAKE 345KV CKT 1'	717	0.210	106.62	'GEN560388 1-G10-029-3 0.6900'
13WP	00NR	2	'FROM->TO'	G11_054	'CIMARRON - DRAPER LAKE 345KV CKT 1'	717	0.210	106.61	'GEN562059 1-G11_042_3 0.6900'
13WP	00NR	2	'FROM->TO'	G11_054	'CIMARRON - DRAPER LAKE 345KV CKT 1'	717	0.210	106.58	'GEN560669 1-G10_057 0.6900'
13WP	00NR	2	'FROM->TO'	G11_054	'CIMARRON - DRAPER LAKE 345KV CKT 1'	717	0.210	106.58	'GEN560714 1-G10_061_3 0.6900'
13WP	00NR	2	'FROM->TO'	G11_054	'CIMARRON - DRAPER LAKE 345KV CKT 1'	717	0.210	106.48	'GEN562065 1-G11_044_3 0.6900'
13WP	00NR	2	'FROM->TO'	G11_054	'CIMARRON - DRAPER LAKE 345KV CKT 1'	717	0.210	106.46	'GEN527165 1-Mustang Gen #5'
13WP	00NR	2	'FROM->TO'	G11_054	'CIMARRON - DRAPER LAKE 345KV CKT 1'	717	0.210	106.46	'GEN527164 1-MUSTANG GEN #4 22 KV'
13WP	00NR	2	'FROM->TO'	G11_054	'CIMARRON - DRAPER LAKE 345KV CKT 1'	717	0.210	106.45	'GEN532653 1-JEFFREY ENERGY CENTER UNIT 3'
13WP	00NR	2	'FROM->TO'	G11_054	'CIMARRON - DRAPER LAKE 345KV CKT 1'	717	0.210	106.45	'GEN527901 1-HOBBS PLANT #1 (CT)'
13WP	00NR	2	'FROM->TO'	G11_054	'CIMARRON - DRAPER LAKE 345KV CKT 1'	717	0.210	106.44	'GEN527902 1-HOBBS PLANT #2 (CT)'
13WP	00NR	2	'FROM->TO'	G11_054	'CIMARRON - DRAPER LAKE 345KV CKT 1'	717	0.210	106.42	'GEN532651 1-JEFFREY ENERGY CENTER UNIT 1'
13WP	00NR	2	'FROM->TO'	G11_054	'CIMARRON - DRAPER LAKE 345KV CKT 1'	717	0.210	106.41	'GEN532652 1-JEFFREY ENERGY CENTER UNIT 2'
13WP	00NR	2	'FROM->TO'	G11_054	'CIMARRON - DRAPER LAKE 345KV CKT 1'	717	0.210	106.40	'GEN527163 1-MUSTANG GEN #3 22 KV'
13WP	00NR	2	'FROM->TO'	G11_054	'CIMARRON - DRAPER LAKE 345KV CKT 1'	717	0.210	106.38	'GEN527161 1-MUSTANG GEN #1'
13WP	00NR	2	'FROM->TO'	G11_054	'CIMARRON - DRAPER LAKE 345KV CKT 1'	717	0.210	106.37	'GEN640011 2-GERALD GENTLEMAN STATION UNIT 2'
13WP	00NR	2	'FROM->TO'	G11_054	'CIMARRON - DRAPER LAKE 345KV CKT 1'	717	0.210	106.37	'GEN527162 1-MUSTANG GEN #2'
13WP	00NR	2	'FROM->TO'	G11_054	'CIMARRON - DRAPER LAKE 345KV CKT 1'	717	0.210	106.36	'GEN562071 1-G11_048_2 18.000'
13WP	00NR	2	'FROM->TO'	G11_054	'CIMARRON - DRAPER LAKE 345KV CKT 1'	717	0.210	106.36	'GEN560600 1-G07-02 15.750'
13WP	00NR	2	'FROM->TO'	G11_054	'CIMARRON - DRAPER LAKE 345KV CKT 1'	717	0.210	106.35	'GEN562035 1-G11_016_3 0.6900'
13WP	00NR	2	'FROM->TO'	G11_054	'CIMARRON - DRAPER LAKE 345KV CKT 1'	717	0.210	106.29	'GEN560356 1-G10-53 0.6900'
13WP	00NR	2	'FROM->TO'	G11_054	'CIMARRON - DRAPER LAKE 345KV CKT 1'	717	0.210	106.26	'GEN520997 1-MORLND2'
13WP	00NR	2	'FROM->TO'	G11_054	'CIMARRON - DRAPER LAKE 345KV CKT 1'	717	0.210	106.25	'GEN562078 1-G11_051_3 0.6900'
13WP	00NR	2	'FROM->TO'	G11_054	'CIMARRON - DRAPER LAKE 345KV CKT 1'	717	0.210	106.22	'GEN560329 1-G10-45 0.6900'
13WP	00NR	2	'FROM->TO'	G11_054	'CIMARRON - DRAPER LAKE 345KV CKT 1'	717	0.210	106.20	'GEN527903 1-HOBBS PLANT #3 (ST)'
13WP	00NR	2	'FROM->TO'	G11_054	'CIMARRON - DRAPER LAKE 345KV CKT 1'	717	0.210	106.18	'GEN520998 1-MORLND3'
13WP	00NR	2	'FROM->TO'	G11_054	'CIMARRON - DRAPER LAKE 345KV CKT 1'	717	0.210	106.18	'GEN640010 1-GERALD GENTLEMAN STATION UNIT 1'
13WP	00NR	2	'FROM->TO'	G11_054	'CIMARRON - DRAPER LAKE 345KV CKT 1'	717	0.210	105.99	'GEN562032 1-G11_017_3 0.6900'
13WP	00NR	2	'FROM->TO'	G11_054	'CIMARRON - DRAPER LAKE 345KV CKT 1'	717	0.210	105.94	'GEN526333 1-JONES GEN #3 21 KV'
13WP	00NR	2	'FROM->TO'	G11_054	'CIMARRON - DRAPER LAKE 345KV CKT 1'	717	0.210	105.94	'GEN526334 1-JONES_4 116.500'
13WP	00NR	2	'FROM->TO'	G11_054	'CIMARRON - DRAPER LAKE 345KV CKT 1'	717	0.210	105.93	'GEN599891 1-OKLAUN'
13WP	00NR	2	'FROM->TO'	G11_054	'CIMARRON - DRAPER LAKE 345KV CKT 1'	717	0.210	105.86	'GEN514805 1-SOONER UNIT 1'
13WP	00NR	2	'FROM->TO'	G11_054	'CIMARRON - DRAPER LAKE 345KV CKT 1'	717	0.210	105.77	'GEN562042 1-G11_014_3 0.6900'
13WP	00NR	2	'FROM->TO'	G11_054	'CIMARRON - DRAPER LAKE 345KV CKT 1'	717	0.210	105.75	'GEN562014 1-G11_023_3 0.6900'
13WP	00NR	2	'FROM->TO'	G11_054	'CIMARRON - DRAPER LAKE 345KV CKT 1'	717	0.210	105.53	'GEN514806 1-SOONER UNIT 2'
13WP	00NR	2	'FROM->TO'	G11_054	'CIMARRON - DRAPER LAKE 345KV CKT 1'	717	0.210	105.49	'GEN531447 1-HOLCOMB GENERATOR'
13WP	00NR	2	'FROM->TO'	G11_054	'CIMARRON - DRAPER LAKE 345KV CKT 1'	717	0.210	105.24	'GEN562074 1-G11_049_3 0.6900'
13WP	00NR	2	'FROM->TO'	G11_054	'CIMARRON - DRAPER LAKE 345KV CKT 1'	717	0.210	105.07	'GEN562020 1-G11_021_3 0.6900'
13WP	00NR	2	'FROM->TO'	G11_054	'CIMARRON - DRAPER LAKE 345KV CKT 1'	717	0.210	105.03	'GEN562017 1-G11_022_3 0.6900'
13WP	00NR	2	'FROM->TO'	G11_054	'CIMARRON - DRAPER LAKE 345KV CKT 1'	717	0.210	104.95	'GEN523971 1-HARRINGTON GEN #1 24 KV'
13WP	00NR	2	'FROM->TO'	G11_054	'CIMARRON - DRAPER LAKE 345KV CKT 1'	717	0.210	104.85	'GEN523972 1-HARRINGTON GEN #2 24 KV'
13WP	00NR	2	'FROM->TO'	G11_054	'CIMARRON - DRAPER LAKE 345KV CKT 1'	717	0.210	104.85	'GEN523973 1-HARRINGTON GEN #3 24 KV'
13WP	00NR	2	'FROM->TO'	G11_054	'CIMARRON - DRAPER LAKE 345KV CKT 1'	717	0.210	104.58	'GEN562023 1-G11_020_3 0.6900'
13WP	00NR	2	'FROM->TO'	G11_054	'CIMARRON - DRAPER LAKE 345KV CKT 1'	717	0.210	104.58	'GEN562026 1-G11_019_3 0.6900'
13WP	00NR	2	'FROM->TO'	G11_054	'CIMARRON - DRAPER LAKE 345KV CKT 1'	717	0.210	104.46	'GEN560225 1-G10-43 18.000'
13WP	00NR	2	'FROM->TO'	G11_054	'CIMARRON - DRAPER LAKE 345KV CKT 1'	717	0.210	103.99	'GEN532751 1-WOLF CREEK GENERATING STATION UNIT 1'
13WP	00NR	2	'FROM->TO'	G11_054	'CIMARRON - DRAPER LAKE 345KV CKT 1'	717	0.210	103.68	'GEN525562 1-TOLK GEN #2 24 KV'
13WP	00NR	2	'FROM->TO'	G11_054	'CIMARRON - DRAPER LAKE 345KV CKT 1'	717	0.210	103.62	'GEN525561 1-TOLK GEN #1 24 KV'
13WP	00NR	2	'FROM->TO'	G11_054	'CIMARRON - DRAPER LAKE 345KV CKT 1'	717	0.210	103.41	'GEN562010 1-G11_024_3 0.6900'
13WP	00NR	2	'FROM->TO'	G11_054	'CIMARRON - DRAPER LAKE 345KV CKT 1'	717	0.210	103.39	'GEN560687 1-G11-007 0.5750'

SEASON	GROUP	SCENARIO	DIRECTION	SOURCE	MONITORED ELEMENT	RATE B (MVA)	TDF	(%MVA) LOADING	CONTINGENCY
13WP	00NR	2	'FROM->TO'	G11_054	'CIMARRON - DRAPER LAKE 345KV CKT 1'	717	0.210	101.03	'GEN560323 1-G10-40 0.6900'
13WP	00NR	2	'FROM->TO'	G11_054	'CIMARRON - DRAPER LAKE 345KV CKT 1'	717	0.210	100.88	'GEN562100 1-G11_054_3 0.6900'
13WP	00NR	2	'FROM->TO'	G11_054	'CIMARRON - DRAPER LAKE 345KV CKT 1'	717	0.210	108.15	'WEBRE - WELLS 500KV CKT 1'
13WP	00NR	2	'FROM->TO'	G11_054	'CIMARRON - DRAPER LAKE 345KV CKT 1'	717	0.210	107.94	'CELE-WELLOP1'
13WP	00NR	2	'FROM->TO'	G11_054	'CIMARRON - DRAPER LAKE 345KV CKT 1'	717	0.210	101.30	'PITTSBURG - VALLIANT 345KV CKT 1'
13WP	00NR	2	'FROM->TO'	G11_054	'CIMARRON - DRAPER LAKE 345KV CKT 1'	717	0.210	108.04	'EL RENO - ROMAN NOSE 138KV CKT 1'
13WP	00NR	2	'FROM->TO'	G11_054	'CIMARRON - DRAPER LAKE 345KV CKT 1'	717	0.210	108.03	'CLINTON AIR FORCE BASE TAP - ELK CITY 138KV CKT 1'
13WP	00NR	2	'FROM->TO'	G11_054	'CIMARRON - DRAPER LAKE 345KV CKT 1'	717	0.210	108.03	'ROMAN NOSE - SOUTHARD 138KV CKT 1'
13WP	00NR	2	'FROM->TO'	G11_054	'CIMARRON - DRAPER LAKE 345KV CKT 1'	717	0.210	108.02	'CLINTON AIR FORCE BASE TAP - HOBART JUNCTION 138KV CKT 1'
13WP	00NR	2	'FROM->TO'	G11_054	'CIMARRON - DRAPER LAKE 345KV CKT 1'	717	0.210	108.02	'DEWEY - SOUTHARD 138KV CKT 1'
13WP	00NR	2	'FROM->TO'	G11_054	'CIMARRON - DRAPER LAKE 345KV CKT 1'	717	0.210	108.33	'HOLLYWOOD - PLEASANT VALLEY 138KV CKT 1'
13WP	00NR	2	'FROM->TO'	G11_054	'CIMARRON - DRAPER LAKE 345KV CKT 1'	717	0.210	108.23	'ELK CITY 230KV - SWEETWATER 230KV CKT 1'
13WP	00NR	2	'FROM->TO'	G11_054	'CIMARRON - DRAPER LAKE 345KV CKT 1'	717	0.210	108.23	'ELK CITY 230KV (ELKCTY-6) 230/138/13.8KV TRANSFORMER CKT 1'
13WP	00NR	2	'FROM->TO'	G11_054	'CIMARRON - DRAPER LAKE 345KV CKT 1'	717	0.210	108.16	'MARSHALL - WOODRING 138KV CKT 1'
13WP	00NR	2	'FROM->TO'	G11_054	'CIMARRON - DRAPER LAKE 345KV CKT 1'	717	0.210	108.15	'COTTONWOOD CREEK - MARSHALL 138KV CKT 1'
13WP	00NR	2	'FROM->TO'	G11_054	'CIMARRON - DRAPER LAKE 345KV CKT 1'	717	0.210	108.26	'DOLET HILLS - SOUTHWEST SHREVEPORT 345KV CKT 1'
13WP	00NR	2	'FROM->TO'	G11_054	'CIMARRON - DRAPER LAKE 345KV CKT 1'	717	0.210	106.83	'LEBROCK - TENASKA RUSK COUNTY 345KV CKT 1'
13WP	00NR	2	'FROM->TO'	G11_054	'CIMARRON - DRAPER LAKE 345KV CKT 1'	717	0.210	106.83	'CROCKETT - TENASKA RUSK COUNTY 345KV CKT 1'
13WP	00NR	2	'FROM->TO'	G11_054	'CIMARRON - DRAPER LAKE 345KV CKT 1'	717	0.210	106.61	'DOLET HILLS 345/230KV TRANSFORMER CKT 1'
13WP	00NR	2	'FROM->TO'	G11_054	'CIMARRON - DRAPER LAKE 345KV CKT 1'	717	0.210	106.78	'WELSH - WILKES 345KV CKT 1'
13WP	00NR	2	'FROM->TO'	G11_054	'CIMARRON - DRAPER LAKE 345KV CKT 1'	717	0.210	106.95	'CROCKETT - GRIMES 345KV CKT 1'
13WP	00NR	2	'FROM->TO'	G11_054	'CIMARRON - DRAPER LAKE 345KV CKT 1'	717	0.210	108.23	'ELDORADO EHV - SHERIDAN EHV 500KV CKT 1'
13WP	00NR	2	'FROM->TO'	G11_054	'CIMARRON - DRAPER LAKE 345KV CKT 1'	717	0.210	106.98	'LONGWOOD - WILKES 345KV CKT 1'
13WP	00NR	2	'FROM->TO'	G11_054	'CIMARRON - DRAPER LAKE 345KV CKT 1'	717	0.210	106.64	'SPP-AEPW-04'
13WP	00NR	2	'FROM->TO'	G11_054	'CIMARRON - DRAPER LAKE 345KV CKT 1'	717	0.210	106.39	'DRAPER LAKE - SOONER TAP 138KV CKT 1'
13WP	00NR	2	'FROM->TO'	G11_054	'CIMARRON - DRAPER LAKE 345KV CKT 1'	717	0.210	106.40	'NORTHWEST TEXARKANA - VALLIANT 345KV CKT 1'
13WP	00NR	2	'FROM->TO'	G11_054	'CIMARRON - DRAPER LAKE 345KV CKT 1'	717	0.210	106.39	'OGE3TERM22'
13WP	00NR	2	'FROM->TO'	G11_054	'CIMARRON - DRAPER LAKE 345KV CKT 1'	717	0.210	110.40	'LAWTON EASTSIDE - OKLAUNION 345KV CKT 1'
13WP	00NR	2	'FROM->TO'	G11_054	'CIMARRON - DRAPER LAKE 345KV CKT 1'	717	0.210	109.22	'G05-15T 345.00 - OKLAUNION 345KV CKT 1'
13WP	00NR	2	'FROM->TO'	G11_054	'CIMARRON - DRAPER LAKE 345KV CKT 1'	717	0.210	109.04	'G05-15T 345.00 - TUCO INTERCHANGE 345KV CKT 1'
13WP	00NR	2	'FROM->TO'	G11_054	'CIMARRON - DRAPER LAKE 345KV CKT 1'	717	0.210	109.23	'OGE3TERM47'
13WP	00NR	2	'FROM->TO'	G11_054	'CIMARRON - DRAPER LAKE 345KV CKT 1'	717	0.210	106.25	'LYDIA - WELSH 345KV CKT 1'
13WP	00NR	2	'FROM->TO'	G11_054	'CIMARRON - DRAPER LAKE 345KV CKT 1'	717	0.210	108.48	'7SAREPT 345.00 - ELDORADO EHV 345KV CKT 1'
13WP	00NR	2	'FROM->TO'	G11_054	'CIMARRON - DRAPER LAKE 345KV CKT 1'	717	0.210	108.48	'A222'
13WP	00NR	2	'FROM->TO'	G11_054	'CIMARRON - DRAPER LAKE 345KV CKT 1'	717	0.210	108.48	'ELDORADO EHV 500/345KV TRANSFORMER CKT 1'
13WP	00NR	2	'FROM->TO'	G11_054	'CIMARRON - DRAPER LAKE 345KV CKT 1'	717	0.210	104.91	'DRAPER LAKE (DRAPER2) 345/138/13.8KV TRANSFORMER CKT 1'
13WP	00NR	2	'FROM->TO'	G11_054	'CIMARRON - DRAPER LAKE 345KV CKT 1'	717	0.210	104.73	'DRAPER LAKE (DRAPER3) 345/138/13.8KV TRANSFORMER CKT 1'
13WP	00NR	2	'FROM->TO'	G11_054	'CIMARRON - DRAPER LAKE 345KV CKT 1'	717	0.210	104.73	'DRAPER LAKE (DRAPER4) 345/138/13.8KV TRANSFORMER CKT 1'
13WP	00NR	2	'FROM->TO'	G11_054	'CIMARRON - DRAPER LAKE 345KV CKT 1'	717	0.210	109.22	'MCCLAIN - PLEASANT VALLEY 138KV CKT 1'
13WP	00NR	2	'FROM->TO'	G11_054	'CIMARRON - DRAPER LAKE 345KV CKT 1'	717	0.210	105.67	'LYDIA - VALLIANT 345KV CKT 1'
13WP	00NR	2	'FROM->TO'	G11_054	'CIMARRON - DRAPER LAKE 345KV CKT 1'	717	0.210	109.44	'ARCADIA - KAMO MEMORIAL 138KV CKT 1'
13WP	00NR	2	'FROM->TO'	G11_054	'CIMARRON - DRAPER LAKE 345KV CKT 1'	717	0.210	108.46	'7SAREPT 345.00 - LONGWOOD 345KV CKT 1'
13WP	00NR	2	'FROM->TO'	G11_054	'CIMARRON - DRAPER LAKE 345KV CKT 1'	717	0.210	108.02	'MORISNT4 138.00 - SOONER 138KV CKT 1'
13WP	00NR	2	'FROM->TO'	G11_054	'CIMARRON - DRAPER LAKE 345KV CKT 1'	717	0.210	105.25	'SPP-AEPW-01'
17WP	00NR	2	'FROM->TO'	G11_054	'CIMARRON - DRAPER LAKE 345KV CKT 1'	717	0.210	100.22	'ANADARKO - BLANCHARD 138KV CKT 1'
13WP	00NR	2	'FROM->TO'	G11_054	'CIMARRON - DRAPER LAKE 345KV CKT 1'	717	0.210	106.71	'FIXICO TAP - MAUD 138KV CKT 1'
13WP	00NR	2	'FROM->TO'	G11_054	'CIMARRON - DRAPER LAKE 345KV CKT 1'	717	0.210	102.54	'DRAPER LAKE - MIDWEST TAP 138KV CKT 1'
17WP	00NR	2	'FROM->TO'	G11_054	'CIMARRON - DRAPER LAKE 345KV CKT 1'	717	0.210	101.16	'CANEYRV7 345.00 - NEOSHO 345KV CKT 1'
17WP	00NR	2	'FROM->TO'	G11_054	'CIMARRON - DRAPER LAKE 345KV CKT 1'	717	0.210	101.01	'CANEYRV7 345.00 - LATHAMS7 345.00 345KV CKT 1'
17WP	00NR	2	'FROM->TO'	G11_054	'CIMARRON - DRAPER LAKE 345KV CKT 1'	717	0.210	100.52	'LATHAMS7 345.00 - ROSE HILL 345KV CKT 1'
13WP	00NR	2	'FROM->TO'	G11_054	'CIMARRON - DRAPER LAKE 345KV CKT 1'	717	0.210	107.01	'HIGHLAND - PINK SW 138KV CKT 1'
13WP	00NR	2	'FROM->TO'	G11_054	'CIMARRON - DRAPER LAKE 345KV CKT 1'	717	0.210	102.40	'OGE3TERM21'
13WP	00NR	2	'FROM->TO'	G11_054	'CIMARRON - DRAPER LAKE 345KV CKT 1'	717	0.209	108.38	'ARCADIA - OMPA-EDMOND GARBER(LAKE) 138KV CKT 1'
13WP	00NR	2	'FROM->TO'	G11_054	'CIMARRON - DRAPER LAKE 345KV CKT 1'	717	0.209	108.31	'CHITWOOD - OMPA-EDMOND GARBER(LAKE) 138KV CKT 1'
13WP	00NR	2	'FROM->TO'	G11_054	'CIMARRON - DRAPER LAKE 345KV CKT 1'	717	0.209	108.29	'CHITWOOD - JONES TAP 138KV CKT 1'
13WP	00NR	2	'FROM->TO'	G11_054	'CIMARRON - DRAPER LAKE 345KV CKT 1'	717	0.209	106.98	'FIXICO TAP - WELEETKA 138KV CKT 1'
13WP	00NR	2	'FROM->TO'	G11_054	'CIMARRON - DRAPER LAKE 345KV CKT 1'	717	0.209	106.74	'OGE3TERM36'
13WP	00NR	2	'FROM->TO'	G11_054	'CIMARRON - DRAPER LAKE 345KV CKT 1'	717	0.209	108.68	'MCELROY - STILLWATER 138KV CKT 1'
13WP	00NR	2	'FROM->TO'	G11_054	'CIMARRON - DRAPER LAKE 345KV CKT 1'	717	0.209	108.43	'KINZE - MCELROY 138KV CKT 1'
13WP	00NR	2	'FROM->TO'	G11_054	'CIMARRON - DRAPER LAKE 345KV CKT 1'	717	0.209	105.28	'FRANKLIN SW - MIDWEST TAP 138KV CKT 1'
17WP	00NR	2	'FROM->TO'	G11_054	'CIMARRON - DRAPER LAKE 345KV CKT 1'	717	0.209	102.03	'DBL-WICH-THI'
13WP	00NR	2	'FROM->TO'	G11_054	'CIMARRON - DRAPER LAKE 345KV CKT 1'	717	0.209	109.12	'HORSESHOE LAKE - KAMO MEMORIAL 138KV CKT 1'
17WP	00NR	2	'FROM->TO'	G11_054	'CIMARRON - DRAPER LAKE 345KV CKT 1'	717	0.209	100.00	'ANADARKO - POCASSETT 138KV CKT 1'
13WP	00NR	2	'FROM->TO'	G11_054	'CIMARRON - DRAPER LAKE 345KV CKT 1'	717	0.209	109.37	'MORISNT4 138.00 - STILLWATER 138KV CKT 1'
12WP	00NR	2	'FROM->TO'	G11_054	'CIMARRON - DRAPER LAKE 345KV CKT 1'	717	0.209	101.49	'DRAPER LAKE - SEMINOLE 345KV CKT 3'
13WP	00NR	2	'FROM->TO'	G11_054	'CIMARRON - DRAPER LAKE 345KV CKT 1'	717	0.209	106.51	'SEMINOLE (SEMINOL2) 345/138/14.4KV TRANSFORMER CKT 1'
13WP	00NR	2	'FROM->TO'	G11_054	'CIMARRON - DRAPER LAKE 345KV CKT 1'	717	0.209	106.50	'SEMINOLE (SEMINOL1) 345/138/14.4KV TRANSFORMER CKT 1'
13WP	00NR	2	'FROM->TO'	G11_054	'CIMARRON - DRAPER LAKE 345KV CKT 1'	717	0.209	106.28	'FRANKLIN - PINK SW 138KV CKT 1'
13WP	00NR	2	'FROM->TO'	G11_054	'CIMARRON - DRAPER LAKE 345KV CKT 1'	717	0.209	106.01	'FRANKLIN - FRANKLIN SW 138KV CKT 1'
17WP	00NR	2	'FROM->TO'	G11_054	'CIMARRON - DRAPER LAKE 345KV CKT 1'	717	0.209	100.26	'OGE3TERM14'
17WP	00NR	2	'FROM->TO'	G11_054	'CIMARRON - DRAPER LAKE 345KV CKT 1'	717	0.209	101.45	'ANDERSONCO 345.00 - LACYGNE 345KV CKT 1'
17WP	00NR	2	'FROM->TO'	G11_054	'CIMARRON - DRAPER LAKE 345KV CKT 1'	717	0.209	101.33	'ANDERSONCO 345.00 - WOLF CREEK 345KV CKT 1'
13WP	00NR	2	'FROM->TO'	G11_054	'CIMARRON - DRAPER LAKE 345KV CKT 1'	717	0.209	104.98	'OGE3TERM23'
13WP	00NR	2	'FROM->TO'	G11_054	'CIMARRON - DRAPER LAKE 345KV CKT 1'	717	0.209	104.98	'BARNES 4 138.00 - DRAPER LAKE 138KV CKT 1'
17WP	00NR	2	'FROM->TO'	G11_054	'CIMARRON - DRAPER LAKE 345KV CKT 1'	717	0.209	100.00	'OGE3TERM12'
17WP	00NR	2	'FROM->TO'	G11_054	'CIMARRON - DRAPER LAKE 345KV CKT 1'	717	0.209	106.14	'GEN336821 1-GRAND GULF UNIT'
17WP	00NR	2	'FROM->TO'	G11_054	'CIMARRON - DRAPER LAKE 345KV CKT 1'	717	0.209	105.78	'GEN336153 1-WATERFORD UNIT#3'
17WP	00NR	2	'FROM->TO'	G11_054	'CIMARRON - DRAPER LAKE 345KV CKT 1'	717	0.209	104.90	'GEN337911 1-ARKANSAS NUCLEAR ONE UNIT #2'

SEASON	GROUP	SCENARIO	DIRECTION	SOURCE	MONITORED ELEMENT	RATE B (MVA)	TDF	(%MVA) LOADING	CONTINGENCY
17WP	00NR	2	'FROM->TO'	G11_054	'CIMARRON - DRAPER LAKE 345KV CKT 1'	717	0.209	104.78	'GEN335831 1-RIVERBEND UNIT#1'
17WP	00NR	2	'FROM->TO'	G11_054	'CIMARRON - DRAPER LAKE 345KV CKT 1'	717	0.209	104.19	'GEN501801 1-DOLET HILLS UNIT1'
17WP	00NR	2	'FROM->TO'	G11_054	'CIMARRON - DRAPER LAKE 345KV CKT 1'	717	0.209	103.86	'GEN337910 1-ARKANSAS NUCLEAR ONE UNIT #1'
17WP	00NR	2	'FROM->TO'	G11_054	'CIMARRON - DRAPER LAKE 345KV CKT 1'	717	0.209	103.03	'GEN337652 1-WHITE BLUFF UNIT #1'
17WP	00NR	2	'FROM->TO'	G11_054	'CIMARRON - DRAPER LAKE 345KV CKT 1'	717	0.209	102.84	'GEN336252 1-NINEMILE POINT UNIT#5'
17WP	00NR	2	'FROM->TO'	G11_054	'CIMARRON - DRAPER LAKE 345KV CKT 1'	717	0.209	102.70	'GEN336251 1-NINEMILE POINT UNIT#4'
17WP	00NR	2	'FROM->TO'	G11_054	'CIMARRON - DRAPER LAKE 345KV CKT 1'	717	0.209	102.62	'GEN337653 1-WHITE BLUFF UNIT #2'
17WP	00NR	2	'FROM->TO'	G11_054	'CIMARRON - DRAPER LAKE 345KV CKT 1'	717	0.209	102.48	'GEN501813 1-RODEMACHER UNIT 3'
17WP	00NR	2	'FROM->TO'	G11_054	'CIMARRON - DRAPER LAKE 345KV CKT 1'	717	0.209	102.45	'GEN338146 1-INDEPENDENCE UNIT #2'
17WP	00NR	2	'FROM->TO'	G11_054	'CIMARRON - DRAPER LAKE 345KV CKT 1'	717	0.209	102.28	'GEN337041 1-GERALD ANDRUS'
17WP	00NR	2	'FROM->TO'	G11_054	'CIMARRON - DRAPER LAKE 345KV CKT 1'	717	0.209	102.28	'GEN338143 1-INDEPENDENCE UNIT #1'
17WP	00NR	2	'FROM->TO'	G11_054	'CIMARRON - DRAPER LAKE 345KV CKT 1'	717	0.209	101.95	'GEN335206 1-NELSON UNIT 6'
17WP	00NR	2	'FROM->TO'	G11_054	'CIMARRON - DRAPER LAKE 345KV CKT 1'	717	0.209	101.92	'GEN334440 1-SABINE UNIT 4'
17WP	00NR	2	'FROM->TO'	G11_054	'CIMARRON - DRAPER LAKE 345KV CKT 1'	717	0.209	101.91	'GEN336831 1-BAXTER WILSON SES'
17WP	00NR	2	'FROM->TO'	G11_054	'CIMARRON - DRAPER LAKE 345KV CKT 1'	717	0.209	101.89	'GEN501812 1-RODEMACHER UNIT 2'
17WP	00NR	2	'FROM->TO'	G11_054	'CIMARRON - DRAPER LAKE 345KV CKT 1'	717	0.209	101.45	'GEN334441 1-SABINE UNIT 5'
17WP	00NR	2	'FROM->TO'	G11_054	'CIMARRON - DRAPER LAKE 345KV CKT 1'	717	0.209	101.32	'GEN335204 1-NELSON UNIT 4'
17WP	00NR	2	'FROM->TO'	G11_054	'CIMARRON - DRAPER LAKE 345KV CKT 1'	717	0.209	101.06	'GEN334433 1-SABINE UNIT 3'
17WP	00NR	2	'FROM->TO'	G11_054	'CIMARRON - DRAPER LAKE 345KV CKT 1'	717	0.209	101.00	'GEN336801 1-BAXTER WILSON UNIT #1'
17WP	00NR	2	'FROM->TO'	G11_054	'CIMARRON - DRAPER LAKE 345KV CKT 1'	717	0.209	100.93	'GEN338388 1-1PLUMPT 23.000'
17WP	00NR	2	'FROM->TO'	G11_054	'CIMARRON - DRAPER LAKE 345KV CKT 1'	717	0.208	100.90	'LAWTON EASTSIDE - OKLAUNION 345KV CKT 1'
17WP	00NR	2	'FROM->TO'	G11_054	'CIMARRON - DRAPER LAKE 345KV CKT 1'	717	0.207	100.30	'MCCLAIN - PLEASANT VALLEY 138KV CKT 1'
13WP	00NR	2	'FROM->TO'	G11_054	'CIMARRON - DRAPER LAKE 345KV CKT 1'	717	0.206	108.77	'CANADIAN RIVER - MUSKOGEE 345KV CKT 1'
13WP	00NR	2	'FROM->TO'	G11_054	'CIMARRON - DRAPER LAKE 345KV CKT 1'	717	0.202	105.23	'DRAPER LAKE - SEMINOLE 345KV CKT 3'
12WP	00NR	2	'FROM->TO'	G11_054	'CIMARRON - DRAPER LAKE 345KV CKT 1'	717	0.201	100.48	'DRAPER LAKE - SEMINOLE 345KV CKT 2'
12WP	00NR	2	'FROM->TO'	G11_054	'CIMARRON - DRAPER LAKE 345KV CKT 1'	717	0.201	100.36	'DRAPER LAKE - SEMINOLE 345KV CKT 1'
13WP	00NR	2	'FROM->TO'	G11_054	'CIMARRON - DRAPER LAKE 345KV CKT 1'	717	0.195	103.77	'DRAPER LAKE - SEMINOLE 345KV CKT 2'
13WP	00NR	2	'FROM->TO'	G11_054	'CIMARRON - DRAPER LAKE 345KV CKT 1'	717	0.195	103.65	'DRAPER LAKE - SEMINOLE 345KV CKT 1'
13WP	00NR	2	'FROM->TO'	G11_054	'CIMARRON - DRAPER LAKE 345KV CKT 1'	717	0.194	103.41	'MUSKOGEE - SEMINOLE 345KV CKT 1'
12WP	00NR	2	'FROM->TO'	G11_054	'CIMARRON - CZECH HALL 138KV CKT 1'	382	0.055	101.17	'CIMARRON - DRAPER LAKE 345KV CKT 1'
12SP	00NR	2	'FROM->TO'	G11_054	'NORTHWEST (NORTWST2) 345/138/13.8KV TRANSFORMER CKT 1'	493	0.050	118.61	'NORTHWEST (NORTWST3) 345/138/13.8KV TRANSFORMER CKT 1'
12SP	00NR	2	'FROM->TO'	G11_054	'NORTHWEST (NORTWST2) 345/138/13.8KV TRANSFORMER CKT 1'	493	0.050	116.26	'NORTHWEST (NORTWST3) 345/138/13.8KV TRANSFORMER CKT 1'
13SP	00NR	2	'FROM->TO'	G11_054	'NORTHWEST (NORTWST2) 345/138/13.8KV TRANSFORMER CKT 1'	493	0.050	115.78	'NORTHWEST (NORTWST3) 345/138/13.8KV TRANSFORMER CKT 1'
13SP	00NR	2	'FROM->TO'	G11_054	'NORTHWEST (NORTWST2) 345/138/13.8KV TRANSFORMER CKT 1'	493	0.050	113.29	'NORTHWEST (NORTWST3) 345/138/13.8KV TRANSFORMER CKT 1'
12SP	00NR	2	'FROM->TO'	G11_054	'NORTHWEST (NORTWST3) 345/138/13.8KV TRANSFORMER CKT 1'	493	0.049	108.66	'NORTHWEST (NORTWST2) 345/138/13.8KV TRANSFORMER CKT 1'
12SP	00NR	2	'FROM->TO'	G11_054	'NORTHWEST (NORTWST3) 345/138/13.8KV TRANSFORMER CKT 1'	493	0.049	106.49	'NORTHWEST (NORTWST2) 345/138/13.8KV TRANSFORMER CKT 1'
13SP	00NR	2	'FROM->TO'	G11_054	'NORTHWEST (NORTWST3) 345/138/13.8KV TRANSFORMER CKT 1'	493	0.049	105.98	'NORTHWEST (NORTWST2) 345/138/13.8KV TRANSFORMER CKT 1'
13SP	00NR	2	'FROM->TO'	G11_054	'NORTHWEST (NORTWST3) 345/138/13.8KV TRANSFORMER CKT 1'	493	0.049	103.69	'NORTHWEST (NORTWST2) 345/138/13.8KV TRANSFORMER CKT 1'
13WP	00NR	2	'FROM->TO'	G11_054	'CIMARRON - CZECH HALL 138KV CKT 1'	382	0.048	100.06	'CIMARRON - HAYMAKER 138KV CKT 1'
12WP	00NR	2	'FROM->TO'	G11_054	'CIMARRON - CZECH HALL 138KV CKT 1'	382	0.047	102.13	'CIMARRON - HAYMAKER 138KV CKT 1'
12WP	00NR	2	'FROM->TO'	G11_054	'CIMARRON - CZECH HALL 138KV CKT 1'	382	0.047	100.68	'DIVISION AVE - HAYMAKER 138KV CKT 1'
12WP	00NR	2	'FROM->TO'	G11_054	'CIMARRON - CZECH HALL 138KV CKT 1'	382	0.043	100.38	'CIMARRON - SARA 138KV CKT 1'
13WP	00NR	2	'FROM->TO'	G11_054	'NORTHWEST (NORTWST2) 345/138/13.8KV TRANSFORMER CKT 1'	493	0.033	104.34	'NORTHWEST (NORTWST3) 345/138/13.8KV TRANSFORMER CKT 1'
12WP	00NR	3	'FROM->TO'	G11_054	'MATTHEWSON 345.00 - NORTHWEST 345KV CKT 1'	1195	0.061	101.42	'CIMARRON - MATTHEWSON 345.00 345KV CKT 1'
13WP	00NR	3	'FROM->TO'	G11_054	'MATTHEWSON 345.00 - NORTHWEST 345KV CKT 1'	1195	0.061	101.59	'CIMARRON - MATTHEWSON 345.00 345KV CKT 1'
12G	09BPSNR	0	'FROM->TO'	G11_055	'SUB 969 - SUB 974 69KV CKT 1'	43	1.000	129.04	'SUB 967 - SUB 968 69KV CKT 1'
12G	09NR	0	'FROM->TO'	G11_055	'SUB 969 - SUB 974 69KV CKT 1'	43	1.000	128.98	'SUB 967 - SUB 968 69KV CKT 1'
17SP	00NR	0	'FROM->TO'	G11_055	'SUB 969 - SUB 974 69KV CKT 1'	43	1.000	127.28	'SUB 967 - SUB 968 69KV CKT 1'
13SP	00NR	0	'FROM->TO'	G11_055	'SUB 969 - SUB 974 69KV CKT 1'	43	1.000	127.25	'SUB 967 - SUB 968 69KV CKT 1'
17WP	00NR	0	'FROM->TO'	G11_055	'SUB 969 - SUB 974 69KV CKT 1'	43	1.000	127.17	'SUB 967 - SUB 968 69KV CKT 1'
12SP	00NR	0	'FROM->TO'	G11_055	'SUB 969 - SUB 974 69KV CKT 1'	43	1.000	126.98	'SUB 967 - SUB 968 69KV CKT 1'
13WP	00NR	0	'FROM->TO'	G11_055	'SUB 969 - SUB 974 69KV CKT 1'	43	1.000	126.90	'SUB 967 - SUB 968 69KV CKT 1'
12WP	00NR	0	'FROM->TO'	G11_055	'SUB 969 - SUB 974 69KV CKT 1'	43	1.000	126.59	'SUB 967 - SUB 968 69KV CKT 1'
17SP	00NR	0	'FROM->TO'	G11_055	'SUB 969 - SUB 974 69KV CKT 1'	43	1.000	125.62	'SUB 968 - SUB 969 69KV CKT 1'
12G	09NR	0	'FROM->TO'	G11_055	'SUB 969 - SUB 974 69KV CKT 1'	43	1.000	125.01	'S1263T1 AUTO'
12G	09BPSNR	0	'FROM->TO'	G11_055	'SUB 969 - SUB 974 69KV CKT 1'	43	1.000	125.00	'SUB 967 - WEST BROCK 69KV CKT 1'
12G	09NR	0	'FROM->TO'	G11_055	'SUB 969 - SUB 974 69KV CKT 1'	43	1.000	124.94	'SUB 967 - WEST BROCK 69KV CKT 1'
12G	09NR	0	'TO->FROM'	G11_055	'SUB 967 - SUB 968 69KV CKT 1'	43	1.000	124.78	'SUB 969 - SUB 974 69KV CKT 1'
12G	09BPSNR	0	'TO->FROM'	G11_055	'SUB 967 - SUB 968 69KV CKT 1'	43	1.000	124.66	'SUB 969 - SUB 974 69KV CKT 1'
12G	09BPSNR	0	'FROM->TO'	G11_055	'SUB 969 - SUB 974 69KV CKT 1'	43	1.000	124.28	'SUB 968 - SUB 969 69KV CKT 1'
12G	09NR	0	'FROM->TO'	G11_055	'SUB 969 - SUB 974 69KV CKT 1'	43	1.000	124.22	'SUB 968 - SUB 969 69KV CKT 1'
12G	09BPSG11_055	0	'FROM->TO'	G11_055	'SUB 969 - SUB 974 69KV CKT 1'	43	1.000	124.19	'SUB 968 - SUB 969 69KV CKT 1'
12G	09G11_055	0	'FROM->TO'	G11_055	'SUB 969 - SUB 974 69KV CKT 1'	43	1.000	124.16	'SUB 968 - SUB 969 69KV CKT 1'
12G	09NR	0	'FROM->TO'	G11_055	'SUB 969 - SUB 974 69KV CKT 1'	43	1.000	124.14	'S968LINBUS'
13SP	00NR	0	'FROM->TO'	G11_055	'SUB 969 - SUB 974 69KV CKT 1'	43	1.000	123.84	'SUB 968 - SUB 969 69KV CKT 1'
13SP	00NR	0	'FROM->TO'	G11_055	'SUB 969 - SUB 974 69KV CKT 1'	43	1.000	123.79	'S968LINBUS'
12SP	00NR	0	'FROM->TO'	G11_055	'SUB 969 - SUB 974 69KV CKT 1'	43	1.000	123.62	'SUB 968 - SUB 969 69KV CKT 1'
12SP	00NR	0	'FROM->TO'	G11_055	'SUB 969 - SUB 974 69KV CKT 1'	43	1.000	123.58	'S968LINBUS'
17WP	00NR	0	'FROM->TO'	G11_055	'SUB 969 - SUB 974 69KV CKT 1'	43	1.000	123.57	'SUB 968 - SUB 969 69KV CKT 1'
17WP	00NR	0	'FROM->TO'	G11_055	'SUB 969 - SUB 974 69KV CKT 1'	43	1.000	123.53	'S968LINBUS'
13SP	00G11_055	0	'FROM->TO'	G11_055	'SUB 969 - SUB 974 69KV CKT 1'	43	1.000	123.27	'SUB 968 - SUB 969 69KV CKT 1'
17SP	00G11_055	0	'FROM->TO'	G11_055	'SUB 969 - SUB 974 69KV CKT 1'	43	1.000	123.25	'SUB 968 - SUB 969 69KV CKT 1'
12SP	00G11_055	0	'FROM->TO'	G11_055	'SUB 969 - SUB 974 69KV CKT 1'	43	1.000	123.04	'SUB 968 - SUB 969 69KV CKT 1'
13WP	00NR	0	'FROM->TO'	G11_055	'SUB 969 - SUB 974 69KV CKT 1'	43	1.000	123.02	'SUB 968 - SUB 969 69KV CKT 1'
13WP	00NR	0	'FROM->TO'	G11_055	'SUB 969 - SUB 974 69KV CKT 1'	43	1.000	122.89	'S968LINBUS'
12WP	00NR	0	'FROM->TO'	G11_055	'SUB 969 - SUB 974 69KV CKT 1'	43	1.000	122.60	'SUB 968 - SUB 969 69KV CKT 1'
12WP	00G11_055	0	'FROM->TO'	G11_055	'SUB 969 - SUB 974 69KV CKT 1'	43	1.000	122.32	'SUB 968 - SUB 969 69KV CKT 1'
17WP	00G11_055	0	'FROM->TO'	G11_055	'SUB 969 - SUB 974 69KV CKT 1'	43	1.000	122.06	'SUB 968 - SUB 969 69KV CKT 1'

SEASON	GROUP	SCENARIO	DIRECTION	SOURCE	MONITORED ELEMENT	RATE B (MVA)	TDF	(%MVA) LOADING	CONTINGENCY
17WP	00G11_055	0	'FROM->TO'	G11_055	'SUB 969 - SUB 974 69KV CKT 1'	43	1.000	122.03	'S968LINBUS'
13WP	00G11_055	0	'FROM->TO'	G11_055	'SUB 969 - SUB 974 69KV CKT 1'	43	1.000	122.02	'SUB 968 - SUB 969 69KV CKT 1'
13WP	00G11_055	0	'FROM->TO'	G11_055	'SUB 969 - SUB 974 69KV CKT 1'	43	1.000	121.98	'S968LINBUS'
17SP	00NR	0	'FROM->TO'	G11_055	'SUB 969 - SUB 974 69KV CKT 1'	43	1.000	121.02	'SUB 967 - WEST BROCK 69KV CKT 1'
13SP	00NR	0	'FROM->TO'	G11_055	'SUB 969 - SUB 974 69KV CKT 1'	43	1.000	120.80	'SUB 967 - WEST BROCK 69KV CKT 1'
12SP	00NR	0	'FROM->TO'	G11_055	'SUB 969 - SUB 974 69KV CKT 1'	43	1.000	120.54	'SUB 967 - WEST BROCK 69KV CKT 1'
12G	09G11_055	0	'TO->FROM'	G11_055	'SUB 968 - SUB 969 69KV CKT 1'	43	1.000	120.14	'SUB 969 - SUB 974 69KV CKT 1'
12G	09NR	0	'TO->FROM'	G11_055	'SUB 968 - SUB 969 69KV CKT 1'	43	1.000	120.07	'SUB 969 - SUB 974 69KV CKT 1'
12G	09BPSG11_055	0	'TO->FROM'	G11_055	'SUB 968 - SUB 969 69KV CKT 1'	43	1.000	120.00	'SUB 969 - SUB 974 69KV CKT 1'
12G	09BPSNR	0	'TO->FROM'	G11_055	'SUB 968 - SUB 969 69KV CKT 1'	43	1.000	119.96	'SUB 969 - SUB 974 69KV CKT 1'
12SP	00NR	0	'FROM->TO'	G11_055	'SUB 969 - SUB 974 69KV CKT 1'	43	1.000	119.91	'S1263T1 AUTO'
13SP	00NR	0	'FROM->TO'	G11_055	'SUB 969 - SUB 974 69KV CKT 1'	43	1.000	119.36	'S1263T1 AUTO'
12SP	00NR	0	'TO->FROM'	G11_055	'SUB 967 - SUB 968 69KV CKT 1'	43	1.000	118.91	'SUB 969 - SUB 974 69KV CKT 1'
12WP	00NR	0	'TO->FROM'	G11_055	'SUB 967 - SUB 968 69KV CKT 1'	43	1.000	118.84	'SUB 969 - SUB 974 69KV CKT 1'
13WP	00NR	0	'TO->FROM'	G11_055	'SUB 967 - SUB 968 69KV CKT 1'	43	1.000	118.67	'SUB 969 - SUB 974 69KV CKT 1'
13SP	00NR	0	'TO->FROM'	G11_055	'SUB 967 - SUB 968 69KV CKT 1'	43	1.000	118.67	'SUB 969 - SUB 974 69KV CKT 1'
17WP	00NR	0	'FROM->TO'	G11_055	'SUB 969 - SUB 974 69KV CKT 1'	43	1.000	118.67	'SUB 967 - WEST BROCK 69KV CKT 1'
13WP	00NR	0	'FROM->TO'	G11_055	'SUB 969 - SUB 974 69KV CKT 1'	43	1.000	118.54	'SUB 967 - WEST BROCK 69KV CKT 1'
12WP	00NR	0	'FROM->TO'	G11_055	'SUB 969 - SUB 974 69KV CKT 1'	43	1.000	118.43	'SUB 967 - WEST BROCK 69KV CKT 1'
17WP	00NR	0	'TO->FROM'	G11_055	'SUB 967 - SUB 968 69KV CKT 1'	43	1.000	117.94	'SUB 969 - SUB 974 69KV CKT 1'
12SP	00G11_055	0	'TO->FROM'	G11_055	'SUB 968 - SUB 969 69KV CKT 1'	43	1.000	117.75	'SUB 969 - SUB 974 69KV CKT 1'
17SP	00NR	0	'TO->FROM'	G11_055	'SUB 967 - SUB 968 69KV CKT 1'	43	1.000	117.61	'SUB 969 - SUB 974 69KV CKT 1'
13SP	00G11_055	0	'TO->FROM'	G11_055	'SUB 968 - SUB 969 69KV CKT 1'	43	1.000	117.50	'SUB 969 - SUB 974 69KV CKT 1'
13WP	00NR	0	'FROM->TO'	G11_055	'SUB 969 - SUB 974 69KV CKT 1'	43	1.000	117.26	'S1263T1 AUTO'
17SP	00G11_055	0	'TO->FROM'	G11_055	'SUB 968 - SUB 969 69KV CKT 1'	43	1.000	117.00	'SUB 969 - SUB 974 69KV CKT 1'
12SP	00NR	0	'TO->FROM'	G11_055	'SUB 968 - SUB 969 69KV CKT 1'	43	1.000	116.96	'SUB 969 - SUB 974 69KV CKT 1'
13SP	00NR	0	'TO->FROM'	G11_055	'SUB 968 - SUB 969 69KV CKT 1'	43	1.000	116.74	'SUB 969 - SUB 974 69KV CKT 1'
12WP	00G11_055	0	'TO->FROM'	G11_055	'SUB 968 - SUB 969 69KV CKT 1'	43	1.000	116.74	'SUB 969 - SUB 974 69KV CKT 1'
13WP	00G11_055	0	'TO->FROM'	G11_055	'SUB 968 - SUB 969 69KV CKT 1'	43	1.000	116.59	'SUB 969 - SUB 974 69KV CKT 1'
17WP	00G11_055	0	'TO->FROM'	G11_055	'SUB 968 - SUB 969 69KV CKT 1'	43	1.000	116.24	'SUB 969 - SUB 974 69KV CKT 1'
12WP	00NR	0	'TO->FROM'	G11_055	'SUB 968 - SUB 969 69KV CKT 1'	43	1.000	116.12	'SUB 969 - SUB 974 69KV CKT 1'
13WP	00NR	0	'TO->FROM'	G11_055	'SUB 968 - SUB 969 69KV CKT 1'	43	1.000	115.99	'SUB 969 - SUB 974 69KV CKT 1'
17SP	00NR	0	'TO->FROM'	G11_055	'SUB 968 - SUB 969 69KV CKT 1'	43	1.000	115.94	'SUB 969 - SUB 974 69KV CKT 1'
17WP	00NR	0	'FROM->TO'	G11_055	'SUB 969 - SUB 974 69KV CKT 1'	43	1.000	115.66	'S1263T1 AUTO'
17WP	00NR	0	'TO->FROM'	G11_055	'SUB 968 - SUB 969 69KV CKT 1'	43	1.000	115.64	'SUB 969 - SUB 974 69KV CKT 1'
12G	09NR	0	'FROM->TO'	G11_055	'SUB 967 - WEST BROCK 69KV CKT 1'	47	1.000	110.57	'SUB 969 - SUB 974 69KV CKT 1'
12G	09BPSNR	0	'FROM->TO'	G11_055	'SUB 967 - WEST BROCK 69KV CKT 1'	47	1.000	110.47	'SUB 969 - SUB 974 69KV CKT 1'
12SP	00NR	0	'FROM->TO'	G11_055	'SUB 967 - WEST BROCK 69KV CKT 1'	47	1.000	102.90	'SUB 969 - SUB 974 69KV CKT 1'
13SP	00NR	0	'FROM->TO'	G11_055	'SUB 967 - WEST BROCK 69KV CKT 1'	47	1.000	102.67	'SUB 969 - SUB 974 69KV CKT 1'
17SP	00NR	0	'FROM->TO'	G11_055	'SUB 967 - WEST BROCK 69KV CKT 1'	47	1.000	101.64	'SUB 969 - SUB 974 69KV CKT 1'
12G	09BPS	0	'FROM->TO'	G11_055	'SUB 969 - SUB 974 69KV CKT 1'	43	1.000	101.17	'SUB 968 - SUB 969 69KV CKT 1'
12G	9	0	'FROM->TO'	G11_055	'SUB 969 - SUB 974 69KV CKT 1'	43	1.000	101.13	'SUB 968 - SUB 969 69KV CKT 1'
12WP	00NR	0	'FROM->TO'	G11_055	'SUB 967 - WEST BROCK 69KV CKT 1'	47	1.000	101.10	'SUB 969 - SUB 974 69KV CKT 1'
13WP	00NR	0	'FROM->TO'	G11_055	'SUB 967 - WEST BROCK 69KV CKT 1'	47	1.000	100.91	'SUB 969 - SUB 974 69KV CKT 1'
17WP	00NR	0	'FROM->TO'	G11_055	'SUB 967 - WEST BROCK 69KV CKT 1'	47	1.000	100.25	'SUB 969 - SUB 974 69KV CKT 1'
17SP	00G11_055	0	'FROM->TO'	G11_055	'SUB 969 - SUB 974 69KV CKT 1'	43	1.000	126.71	'SUB 967 - SUB 968 69KV CKT 1'
17SP	00G11_055	0	'FROM->TO'	G11_055	'SUB 969 - SUB 974 69KV CKT 1'	43	1.000	120.28	'SUB 967 - WEST BROCK 69KV CKT 1'
17SP	00G11_055	0	'TO->FROM'	G11_055	'SUB 967 - SUB 968 69KV CKT 1'	43	1.000	118.79	'SUB 969 - SUB 974 69KV CKT 1'
17SP	00G11_055	0	'FROM->TO'	G11_055	'SUB 967 - WEST BROCK 69KV CKT 1'	47	1.000	102.80	'SUB 969 - SUB 974 69KV CKT 1'
13SP	00G11_055	0	'FROM->TO'	G11_055	'SUB 969 - SUB 974 69KV CKT 1'	43	1.000	125.92	'SUB 967 - SUB 968 69KV CKT 1'
12SP	00G11_055	0	'FROM->TO'	G11_055	'SUB 969 - SUB 974 69KV CKT 1'	43	1.000	125.76	'SUB 967 - SUB 968 69KV CKT 1'
12SP	00G11_055	0	'TO->FROM'	G11_055	'SUB 967 - SUB 968 69KV CKT 1'	43	1.000	119.79	'SUB 969 - SUB 974 69KV CKT 1'
13SP	00G11_055	0	'FROM->TO'	G11_055	'SUB 969 - SUB 974 69KV CKT 1'	43	1.000	119.51	'SUB 967 - WEST BROCK 69KV CKT 1'
13SP	00G11_055	0	'TO->FROM'	G11_055	'SUB 967 - SUB 968 69KV CKT 1'	43	1.000	119.51	'SUB 969 - SUB 974 69KV CKT 1'
12SP	00G11_055	0	'FROM->TO'	G11_055	'SUB 969 - SUB 974 69KV CKT 1'	43	1.000	119.36	'SUB 967 - WEST BROCK 69KV CKT 1'
12SP	00G11_055	0	'FROM->TO'	G11_055	'SUB 967 - WEST BROCK 69KV CKT 1'	47	1.000	103.76	'SUB 969 - SUB 974 69KV CKT 1'
13SP	00G11_055	0	'FROM->TO'	G11_055	'SUB 967 - WEST BROCK 69KV CKT 1'	47	1.000	103.49	'SUB 969 - SUB 974 69KV CKT 1'
17WP	00G11_055	0	'FROM->TO'	G11_055	'SUB 969 - SUB 974 69KV CKT 1'	43	1.000	125.72	'SUB 967 - SUB 968 69KV CKT 1'
17WP	00G11_055	0	'FROM->TO'	G11_055	'SUB 969 - SUB 974 69KV CKT 1'	43	1.000	118.64	'S1263T1 AUTO'
17WP	00G11_055	0	'TO->FROM'	G11_055	'SUB 967 - SUB 968 69KV CKT 1'	43	1.000	118.61	'SUB 969 - SUB 974 69KV CKT 1'
17WP	00G11_055	0	'FROM->TO'	G11_055	'SUB 969 - SUB 974 69KV CKT 1'	43	1.000	117.44	'SUB 967 - WEST BROCK 69KV CKT 1'
17WP	00G11_055	0	'FROM->TO'	G11_055	'SUB 967 - WEST BROCK 69KV CKT 1'	47	1.000	100.91	'SUB 969 - SUB 974 69KV CKT 1'
13WP	00G11_055	0	'FROM->TO'	G11_055	'SUB 969 - SUB 974 69KV CKT 1'	43	1.000	125.29	'SUB 967 - SUB 968 69KV CKT 1'
13WP	00G11_055	0	'TO->FROM'	G11_055	'SUB 967 - SUB 968 69KV CKT 1'	43	1.000	119.32	'SUB 969 - SUB 974 69KV CKT 1'
13WP	00G11_055	0	'FROM->TO'	G11_055	'SUB 969 - SUB 974 69KV CKT 1'	43	1.000	118.53	'S1263T1 AUTO'
13WP	00G11_055	0	'FROM->TO'	G11_055	'SUB 969 - SUB 974 69KV CKT 1'	43	1.000	116.98	'SUB 967 - WEST BROCK 69KV CKT 1'
13WP	00G11_055	0	'FROM->TO'	G11_055	'SUB 967 - WEST BROCK 69KV CKT 1'	47	1.000	101.55	'SUB 969 - SUB 974 69KV CKT 1'
12WP	00G11_055	0	'FROM->TO'	G11_055	'SUB 969 - SUB 974 69KV CKT 1'	43	1.000	125.63	'SUB 967 - SUB 968 69KV CKT 1'
12WP	00G11_055	0	'TO->FROM'	G11_055	'SUB 967 - SUB 968 69KV CKT 1'	43	1.000	119.49	'SUB 969 - SUB 974 69KV CKT 1'
12WP	00G11_055	0	'FROM->TO'	G11_055	'SUB 969 - SUB 974 69KV CKT 1'	43	1.000	117.34	'SUB 967 - WEST BROCK 69KV CKT 1'
12WP	00G11_055	0	'FROM->TO'	G11_055	'SUB 967 - WEST BROCK 69KV CKT 1'	47	1.000	101.76	'SUB 969 - SUB 974 69KV CKT 1'
12G	09BPSG11_055	0	'FROM->TO'	G11_055	'SUB 969 - SUB 974 69KV CKT 1'	43	1.000	128.94	'SUB 967 - SUB 968 69KV CKT 1'
12G	09G11_055	0	'FROM->TO'	G11_055	'SUB 969 - SUB 974 69KV CKT 1'	43	1.000	128.91	'SUB 967 - SUB 968 69KV CKT 1'
12G	09BPSG11_055	0	'FROM->TO'	G11_055	'SUB 969 - SUB 974 69KV CKT 1'	43	1.000	124.90	'SUB 967 - WEST BROCK 69KV CKT 1'
12G	09G11_055	0	'FROM->TO'	G11_055	'SUB 969 - SUB 974 69KV CKT 1'	43	1.000	124.87	'SUB 967 - WEST BROCK 69KV CKT 1'
12G	09G11_055	0	'TO->FROM'	G11_055	'SUB 967 - SUB 968 69KV CKT 1'	43	1.000	124.85	'SUB 969 - SUB 974 69KV CKT 1'
12G	09BPSG11_055	0	'TO->FROM'	G11_055	'SUB 967 - SUB 968 69KV CKT 1'	43	1.000	124.71	'SUB 969 - SUB 974 69KV CKT 1'
12G	09G11_055	0	'FROM->TO'	G11_055	'SUB 967 - WEST BROCK 69KV CKT 1'	47	1.000	110.64	'SUB 969 - SUB 974 69KV CKT 1'

SEASON	GROUP	SCENARIO	DIRECTION	SOURCE	MONITORED ELEMENT	RATE B (MVA)	TDF	(%MVA) LOADING	CONTINGENCY
12G	09BPSG11_055	0	'FROM->TO'	G11_055	'SUB 967 - WEST BROCK 69KV CKT 1'	47	1.000	110.50	'SUB 969 - SUB 974 69KV CKT 1'
12G	09BPS	0	'FROM->TO'	G11_055	'SUB 969 - SUB 974 69KV CKT 1'	43	1.000	105.90	'SUB 967 - SUB 968 69KV CKT 1'
12G	9	0	'FROM->TO'	G11_055	'SUB 969 - SUB 974 69KV CKT 1'	43	1.000	105.87	'SUB 967 - SUB 968 69KV CKT 1'
12G	9	0	'TO->FROM'	G11_055	'SUB 967 - SUB 968 69KV CKT 1'	43	1.000	103.39	'SUB 969 - SUB 974 69KV CKT 1'
12G	09BPS	0	'TO->FROM'	G11_055	'SUB 967 - SUB 968 69KV CKT 1'	43	1.000	103.23	'SUB 969 - SUB 974 69KV CKT 1'
12G	09BPS	0	'FROM->TO'	G11_055	'SUB 969 - SUB 974 69KV CKT 1'	43	1.000	101.97	'SUB 967 - WEST BROCK 69KV CKT 1'
12G	9	0	'FROM->TO'	G11_055	'SUB 969 - SUB 974 69KV CKT 1'	43	1.000	101.93	'SUB 967 - WEST BROCK 69KV CKT 1'
13SP	00NR	0	'FROM->TO'	G11_055	'SUB 969 - SUB 974 69KV CKT 1'	43	0.621	103.41	'SUB 963 - WEST BROCK 69KV CKT 1'
12SP	00NR	0	'FROM->TO'	G11_055	'SUB 969 - SUB 974 69KV CKT 1'	43	0.620	102.95	'SUB 963 - WEST BROCK 69KV CKT 1'
17SP	00NR	0	'FROM->TO'	G11_055	'SUB 969 - SUB 974 69KV CKT 1'	43	0.620	110.50	'SUB 963 - WEST BROCK 69KV CKT 1'
13WP	00NR	0	'FROM->TO'	G11_055	'SUB 969 - SUB 974 69KV CKT 1'	43	0.620	104.71	'SUB 963 - WEST BROCK 69KV CKT 1'
12WP	00NR	0	'FROM->TO'	G11_055	'SUB 969 - SUB 974 69KV CKT 1'	43	0.620	104.43	'SUB 963 - WEST BROCK 69KV CKT 1'
17WP	00NR	0	'FROM->TO'	G11_055	'SUB 969 - SUB 974 69KV CKT 1'	43	0.620	108.71	'SUB 963 - WEST BROCK 69KV CKT 1'
17WP	00G11_055	0	'FROM->TO'	G11_055	'SUB 969 - SUB 974 69KV CKT 1'	43	0.619	107.07	'SUB 963 - WEST BROCK 69KV CKT 1'
17SP	00G11_055	0	'FROM->TO'	G11_055	'SUB 969 - SUB 974 69KV CKT 1'	43	0.619	113.34	'SUB 963 - WEST BROCK 69KV CKT 1'
13WP	00G11_055	0	'FROM->TO'	G11_055	'SUB 969 - SUB 974 69KV CKT 1'	43	0.619	103.59	'SUB 963 - WEST BROCK 69KV CKT 1'
12WP	00G11_055	0	'FROM->TO'	G11_055	'SUB 969 - SUB 974 69KV CKT 1'	43	0.619	103.48	'SUB 963 - WEST BROCK 69KV CKT 1'
13SP	00G11_055	0	'FROM->TO'	G11_055	'SUB 969 - SUB 974 69KV CKT 1'	43	0.619	102.51	'SUB 963 - WEST BROCK 69KV CKT 1'
12SP	00G11_055	0	'FROM->TO'	G11_055	'SUB 969 - SUB 974 69KV CKT 1'	43	0.619	102.28	'SUB 963 - WEST BROCK 69KV CKT 1'
12G	09G11_055	0	'FROM->TO'	G11_055	'SUB 969 - SUB 974 69KV CKT 1'	43	0.619	100.18	'SUB 963 - WEST BROCK 69KV CKT 1'
17SP	00NR	0	'FROM->TO'	G11_055	'SUB 969 - SUB 974 69KV CKT 1'	43	0.616	100.34	'SUB 1258 - SUB 1263 BROCK 161KV CKT 1'
17SP	00NR	0	'FROM->TO'	G11_055	'SUB 969 - SUB 974 69KV CKT 1'	43	0.616	100.16	'S1366 5 161.00 - SUB 1258 161KV CKT 1'
13SP	00NR	0	'FROM->TO'	G11_055	'SUB 969 - SUB 974 69KV CKT 1'	43	0.610	105.28	'SUB 963 - SUB 977 69KV CKT 1'
13SP	00NR	0	'FROM->TO'	G11_055	'SUB 969 - SUB 974 69KV CKT 1'	43	0.610	104.53	'NEB CITY U SUB 903 - SUB 977 69KV CKT 1'
12SP	00NR	0	'FROM->TO'	G11_055	'SUB 969 - SUB 974 69KV CKT 1'	43	0.609	104.77	'SUB 963 - SUB 977 69KV CKT 1'
12SP	00NR	0	'FROM->TO'	G11_055	'SUB 969 - SUB 974 69KV CKT 1'	43	0.609	104.02	'NEB CITY U SUB 903 - SUB 977 69KV CKT 1'
17SP	00NR	0	'FROM->TO'	G11_055	'SUB 969 - SUB 974 69KV CKT 1'	43	0.609	113.65	'SUB 963 - SUB 977 69KV CKT 1'
17SP	00NR	0	'FROM->TO'	G11_055	'SUB 969 - SUB 974 69KV CKT 1'	43	0.609	112.89	'NEB CITY U SUB 903 - SUB 977 69KV CKT 1'
17SP	00NR	0	'FROM->TO'	G11_055	'SUB 969 - SUB 974 69KV CKT 1'	43	0.609	101.68	'NEB CITY U SUB 903 - SUB 962 69KV CKT 1'
13WP	00NR	0	'FROM->TO'	G11_055	'SUB 969 - SUB 974 69KV CKT 1'	43	0.609	106.86	'SUB 963 - SUB 977 69KV CKT 1'
13WP	00NR	0	'FROM->TO'	G11_055	'SUB 969 - SUB 974 69KV CKT 1'	43	0.609	106.05	'NEB CITY U SUB 903 - SUB 977 69KV CKT 1'
12WP	00NR	0	'FROM->TO'	G11_055	'SUB 969 - SUB 974 69KV CKT 1'	43	0.609	106.47	'SUB 963 - SUB 977 69KV CKT 1'
12WP	00NR	0	'FROM->TO'	G11_055	'SUB 969 - SUB 974 69KV CKT 1'	43	0.609	105.66	'NEB CITY U SUB 903 - SUB 977 69KV CKT 1'
17WP	00NR	0	'FROM->TO'	G11_055	'SUB 969 - SUB 974 69KV CKT 1'	43	0.609	111.29	'SUB 963 - SUB 977 69KV CKT 1'
17WP	00NR	0	'FROM->TO'	G11_055	'SUB 969 - SUB 974 69KV CKT 1'	43	0.609	110.47	'NEB CITY U SUB 903 - SUB 977 69KV CKT 1'
17WP	00NR	0	'FROM->TO'	G11_055	'SUB 969 - SUB 974 69KV CKT 1'	43	0.609	100.27	'NEB CITY U SUB 903 - SUB 962 69KV CKT 1'
12G	09NR	0	'FROM->TO'	G11_055	'SUB 969 - SUB 974 69KV CKT 1'	43	0.608	100.90	'SUB 963 - SUB 977 69KV CKT 1'
12G	09NR	0	'FROM->TO'	G11_055	'SUB 969 - SUB 974 69KV CKT 1'	43	0.608	100.53	'NEB CITY U SUB 903 - SUB 977 69KV CKT 1'
17SP	00G11_055	0	'FROM->TO'	G11_055	'SUB 969 - SUB 974 69KV CKT 1'	43	0.608	102.53	'COOPER - MOORE 345KV CKT 1'
17WP	00G11_055	0	'FROM->TO'	G11_055	'SUB 969 - SUB 974 69KV CKT 1'	43	0.608	108.68	'SUB 963 - SUB 977 69KV CKT 1'
17WP	00G11_055	0	'FROM->TO'	G11_055	'SUB 969 - SUB 974 69KV CKT 1'	43	0.608	107.86	'NEB CITY U SUB 903 - SUB 977 69KV CKT 1'
17SP	00G11_055	0	'FROM->TO'	G11_055	'SUB 969 - SUB 974 69KV CKT 1'	43	0.608	114.86	'SUB 963 - SUB 977 69KV CKT 1'
17SP	00G11_055	0	'FROM->TO'	G11_055	'SUB 969 - SUB 974 69KV CKT 1'	43	0.608	114.16	'NEB CITY U SUB 903 - SUB 977 69KV CKT 1'
17SP	00G11_055	0	'FROM->TO'	G11_055	'SUB 969 - SUB 974 69KV CKT 1'	43	0.608	103.09	'NEB CITY U SUB 903 - SUB 962 69KV CKT 1'
13WP	00G11_055	0	'FROM->TO'	G11_055	'SUB 969 - SUB 974 69KV CKT 1'	43	0.608	104.73	'SUB 963 - SUB 977 69KV CKT 1'
12WP	00G11_055	0	'FROM->TO'	G11_055	'SUB 969 - SUB 974 69KV CKT 1'	43	0.608	104.56	'SUB 963 - SUB 977 69KV CKT 1'
13WP	00G11_055	0	'FROM->TO'	G11_055	'SUB 969 - SUB 974 69KV CKT 1'	43	0.608	103.91	'NEB CITY U SUB 903 - SUB 977 69KV CKT 1'
12WP	00G11_055	0	'FROM->TO'	G11_055	'SUB 969 - SUB 974 69KV CKT 1'	43	0.608	103.75	'NEB CITY U SUB 903 - SUB 977 69KV CKT 1'
13SP	00G11_055	0	'FROM->TO'	G11_055	'SUB 969 - SUB 974 69KV CKT 1'	43	0.608	103.75	'SUB 963 - SUB 977 69KV CKT 1'
13SP	00G11_055	0	'FROM->TO'	G11_055	'SUB 969 - SUB 974 69KV CKT 1'	43	0.608	103.06	'NEB CITY U SUB 903 - SUB 977 69KV CKT 1'
12SP	00G11_055	0	'FROM->TO'	G11_055	'SUB 969 - SUB 974 69KV CKT 1'	43	0.608	103.56	'SUB 963 - SUB 977 69KV CKT 1'
12SP	00G11_055	0	'FROM->TO'	G11_055	'SUB 969 - SUB 974 69KV CKT 1'	43	0.608	102.81	'NEB CITY U SUB 903 - SUB 977 69KV CKT 1'
12G	09G11_055	0	'FROM->TO'	G11_055	'SUB 969 - SUB 974 69KV CKT 1'	43	0.607	102.07	'SUB 963 - SUB 977 69KV CKT 1'
12G	09G11_055	0	'FROM->TO'	G11_055	'SUB 969 - SUB 974 69KV CKT 1'	43	0.607	101.60	'NEB CITY U SUB 903 - SUB 977 69KV CKT 1'
17SP	00G11_055	0	'FROM->TO'	G11_055	'SUB 969 - SUB 974 69KV CKT 1'	43	0.602	103.55	'MOORE (MOORE T1) 345/115/13.8KV TRANSFORMER CKT 1'
13SP	00NR	0	'FROM->TO'	G11_055	'SUB 969 - SUB 974 69KV CKT 1'	43	0.396	110.66	'FIRTH - SHELDON 115KV CKT 1'
12SP	00NR	0	'FROM->TO'	G11_055	'SUB 969 - SUB 974 69KV CKT 1'	43	0.396	109.22	'FIRTH - SHELDON 115KV CKT 1'
17SP	00NR	0	'FROM->TO'	G11_055	'SUB 969 - SUB 974 69KV CKT 1'	43	0.396	117.96	'FIRTH - SHELDON 115KV CKT 1'
13WP	00NR	0	'FROM->TO'	G11_055	'SUB 969 - SUB 974 69KV CKT 1'	43	0.396	118.09	'FIRTH - SHELDON 115KV CKT 1'
12WP	00NR	0	'FROM->TO'	G11_055	'SUB 969 - SUB 974 69KV CKT 1'	43	0.396	116.74	'FIRTH - SHELDON 115KV CKT 1'
17WP	00NR	0	'FROM->TO'	G11_055	'SUB 969 - SUB 974 69KV CKT 1'	43	0.396	123.07	'FIRTH - SHELDON 115KV CKT 1'
17SP	00G11_055	0	'FROM->TO'	G11_055	'SUB 969 - SUB 974 69KV CKT 1'	43	0.396	113.81	'FIRTH - SHELDON 115KV CKT 1'
17WP	00G11_055	0	'FROM->TO'	G11_055	'SUB 969 - SUB 974 69KV CKT 1'	43	0.396	120.61	'FIRTH - SHELDON 115KV CKT 1'
13SP	00G11_055	0	'FROM->TO'	G11_055	'SUB 969 - SUB 974 69KV CKT 1'	43	0.395	108.68	'FIRTH - SHELDON 115KV CKT 1'
12SP	00G11_055	0	'FROM->TO'	G11_055	'SUB 969 - SUB 974 69KV CKT 1'	43	0.395	107.33	'FIRTH - SHELDON 115KV CKT 1'
13WP	00G11_055	0	'FROM->TO'	G11_055	'SUB 969 - SUB 974 69KV CKT 1'	43	0.395	115.70	'FIRTH - SHELDON 115KV CKT 1'
12WP	00G11_055	0	'FROM->TO'	G11_055	'SUB 969 - SUB 974 69KV CKT 1'	43	0.395	114.50	'FIRTH - SHELDON 115KV CKT 1'
17WP	00NR	0	'TO->FROM'	G11_055	'NEB CITY U SYR SUB - SUB 970 69KV CKT 1'	47	0.172	106.34	'SUB 963 - SUB 977 69KV CKT 1'
17WP	00NR	0	'TO->FROM'	G11_055	'NEB CITY U SYR SUB - SUB 970 69KV CKT 1'	47	0.172	105.00	'NEB CITY U SUB 903 - SUB 977 69KV CKT 1'
12WP	00NR	0	'TO->FROM'	G11_055	'NEB CITY U SYR SUB - SUB 970 69KV CKT 1'	47	0.172	102.53	'SUB 963 - SUB 977 69KV CKT 1'
12WP	00NR	0	'TO->FROM'	G11_055	'NEB CITY U SYR SUB - SUB 970 69KV CKT 1'	47	0.172	101.20	'NEB CITY U SUB 903 - SUB 977 69KV CKT 1'
13WP	00NR	0	'TO->FROM'	G11_055	'NEB CITY U SYR SUB - SUB 970 69KV CKT 1'	47	0.172	103.96	'SUB 963 - SUB 977 69KV CKT 1'
13WP	00NR	0	'TO->FROM'	G11_055	'NEB CITY U SYR SUB - SUB 970 69KV CKT 1'	47	0.172	102.62	'NEB CITY U SUB 903 - SUB 977 69KV CKT 1'
12SP	00NR	0	'TO->FROM'	G11_055	'NEB CITY U SYR SUB - SUB 970 69KV CKT 1'	47	0.172	102.46	'SUB 963 - SUB 977 69KV CKT 1'
12SP	00NR	0	'TO->FROM'	G11_055	'NEB CITY U SYR SUB - SUB 970 69KV CKT 1'	47	0.172	101.19	'NEB CITY U SUB 903 - SUB 977 69KV CKT 1'
17SP	00NR	0	'TO->FROM'	G11_055	'NEB CITY U SYR SUB - SUB 970 69KV CKT 1'	47	0.172	111.12	'SUB 963 - SUB 977 69KV CKT 1'
17SP	00NR	0	'TO->FROM'	G11_055	'NEB CITY U SYR SUB - SUB 970 69KV CKT 1'	47	0.172	109.83	'NEB CITY U SUB 903 - SUB 977 69KV CKT 1'
17SP	00NR	0	'TO->FROM'	G11_055	'HYDROCARBON TAP - SUB 974 69KV CKT 1'	57	0.172	104.99	'SUB 963 - SUB 977 69KV CKT 1'

SEASON	GROUP	SCENARIO	DIRECTION	SOURCE	MONITORED ELEMENT	RATE B (MVA)	TDF	(%MVA) LOADING	CONTINGENCY
17SP	00NR	0	'TO->FROM'	G11_055	'HYDROCARBON TAP - SUB 974 69KV CKT 1'	57	0.172	103.89	'NEB CITY U SUB 903 - SUB 977 69KV CKT 1'
13SP	00NR	0	'TO->FROM'	G11_055	'NEB CITY U SYR SUB - SUB 970 69KV CKT 1'	47	0.172	103.26	'SUB 963 - SUB 977 69KV CKT 1'
13SP	00NR	0	'TO->FROM'	G11_055	'NEB CITY U SYR SUB - SUB 970 69KV CKT 1'	47	0.172	101.99	'NEB CITY U SUB 903 - SUB 977 69KV CKT 1'
12G	09NR	0	'FROM->TO'	G11_055	'SHELDON - SW7TH & PLEASANT HILL 115KV CKT 2'	43	0.125	135.08	'MOORE (MOORE T1) 345/115/13.8KV TRANSFORMER CKT 1'
12SP	00NR	0	'FROM->TO'	G11_055	'SHELDON - SW7TH & PLEASANT HILL 115KV CKT 2'	43	0.123	123.73	'MOORE (MOORE T1) 345/115/13.8KV TRANSFORMER CKT 1'
13SP	00NR	0	'FROM->TO'	G11_055	'SHELDON - SW7TH & PLEASANT HILL 115KV CKT 2'	43	0.123	122.12	'MOORE (MOORE T1) 345/115/13.8KV TRANSFORMER CKT 1'
17SP	00NR	0	'FROM->TO'	G11_055	'SHELDON - SW7TH & PLEASANT HILL 115KV CKT 2'	43	0.122	120.79	'MOORE (MOORE T1) 345/115/13.8KV TRANSFORMER CKT 1'
12G	09NR	0	'FROM->TO'	G11_055	'SHELDON - SW7TH & PLEASANT HILL 115KV CKT 2'	43	0.093	233.82	'SHELDON - SW7TH & PLEASANT HILL 115KV CKT 1'
12WP	00NR	0	'FROM->TO'	G11_055	'SHELDON - SW7TH & PLEASANT HILL 115KV CKT 2'	105	0.091	113.20	'SHELDON - SW7TH & PLEASANT HILL 115KV CKT 1'
13WP	00NR	0	'FROM->TO'	G11_055	'SHELDON - SW7TH & PLEASANT HILL 115KV CKT 2'	105	0.091	113.53	'SHELDON - SW7TH & PLEASANT HILL 115KV CKT 1'
17WP	00NR	0	'FROM->TO'	G11_055	'SHELDON - SW7TH & PLEASANT HILL 115KV CKT 2'	105	0.091	111.69	'SHELDON - SW7TH & PLEASANT HILL 115KV CKT 1'
12SP	00NR	0	'FROM->TO'	G11_055	'SHELDON - SW7TH & PLEASANT HILL 115KV CKT 2'	43	0.091	272.10	'SHELDON - SW7TH & PLEASANT HILL 115KV CKT 1'
13SP	00NR	0	'FROM->TO'	G11_055	'SHELDON - SW7TH & PLEASANT HILL 115KV CKT 2'	43	0.091	271.07	'SHELDON - SW7TH & PLEASANT HILL 115KV CKT 1'
17SP	00NR	0	'FROM->TO'	G11_055	'SHELDON - SW7TH & PLEASANT HILL 115KV CKT 2'	43	0.090	271.30	'SHELDON - SW7TH & PLEASANT HILL 115KV CKT 1'
12G	09NR	0	'FROM->TO'	G11_055	'SHELDON - SW7TH & PLEASANT HILL 115KV CKT 2'	43	0.077	157.98	'ENRONTAP'
12G	09NR	0	'FROM->TO'	G11_055	'SHELDON - SW7TH & PLEASANT HILL 115KV CKT 2'	43	0.077	157.98	'HYDROCARBON TAP - SUB 974 69KV CKT 1'
12G	09NR	0	'FROM->TO'	G11_055	'SHELDON - SW7TH & PLEASANT HILL 115KV CKT 2'	43	0.077	157.98	'HYDROCARBON TAP - SUB 970 69KV CKT 1'
12SP	00NR	0	'FROM->TO'	G11_055	'SHELDON - SW7TH & PLEASANT HILL 115KV CKT 2'	43	0.076	184.00	'ENRONTAP'
12SP	00NR	0	'FROM->TO'	G11_055	'SHELDON - SW7TH & PLEASANT HILL 115KV CKT 2'	43	0.076	184.00	'HYDROCARBON TAP - SUB 974 69KV CKT 1'
12SP	00NR	0	'FROM->TO'	G11_055	'SHELDON - SW7TH & PLEASANT HILL 115KV CKT 2'	43	0.076	184.00	'HYDROCARBON TAP - SUB 970 69KV CKT 1'
12SP	00NR	0	'FROM->TO'	G11_055	'SHELDON - SW7TH & PLEASANT HILL 115KV CKT 2'	43	0.076	182.52	'NEB CITY U SYR SUB - SUB 970 69KV CKT 1'
13SP	00NR	0	'FROM->TO'	G11_055	'SHELDON - SW7TH & PLEASANT HILL 115KV CKT 2'	43	0.076	183.36	'ENRONTAP'
13SP	00NR	0	'FROM->TO'	G11_055	'SHELDON - SW7TH & PLEASANT HILL 115KV CKT 2'	43	0.076	183.36	'HYDROCARBON TAP - SUB 974 69KV CKT 1'
13SP	00NR	0	'FROM->TO'	G11_055	'SHELDON - SW7TH & PLEASANT HILL 115KV CKT 2'	43	0.076	183.35	'HYDROCARBON TAP - SUB 970 69KV CKT 1'
13SP	00NR	0	'FROM->TO'	G11_055	'SHELDON - SW7TH & PLEASANT HILL 115KV CKT 2'	43	0.076	181.88	'NEB CITY U SYR SUB - SUB 970 69KV CKT 1'
13SP	00NR	0	'FROM->TO'	G11_055	'SHELDON - SW7TH & PLEASANT HILL 115KV CKT 2'	43	0.076	180.98	'NEB CITY U SYR SUB - SUB 971 69KV CKT 1'
17SP	00NR	0	'FROM->TO'	G11_055	'SHELDON - SW7TH & PLEASANT HILL 115KV CKT 2'	43	0.075	184.15	'HYDROCARBON TAP - SUB 974 69KV CKT 1'
17SP	00NR	0	'FROM->TO'	G11_055	'SHELDON - SW7TH & PLEASANT HILL 115KV CKT 2'	43	0.075	184.14	'HYDROCARBON TAP - SUB 970 69KV CKT 1'
17SP	00NR	0	'FROM->TO'	G11_055	'SHELDON - SW7TH & PLEASANT HILL 115KV CKT 2'	43	0.075	182.53	'NEB CITY U SYR SUB - SUB 970 69KV CKT 1'
17SP	00NR	0	'FROM->TO'	G11_055	'SHELDON - SW7TH & PLEASANT HILL 115KV CKT 2'	43	0.075	181.58	'NEB CITY U SYR SUB - SUB 971 69KV CKT 1'
17SP	00NR	0	'FROM->TO'	G11_055	'SHELDON - SW7TH & PLEASANT HILL 115KV CKT 2'	43	0.065	167.19	'COOPER - SUB 1280 161KV CKT 1'
17SP	00NR	0	'FROM->TO'	G11_055	'SHELDON - SW7TH & PLEASANT HILL 115KV CKT 2'	43	0.063	185.16	'CRETE - SHELDON 115KV CKT 1'
12SP	00NR	0	'FROM->TO'	G11_055	'SHELDON - SW7TH & PLEASANT HILL 115KV CKT 2'	43	0.063	184.52	'CRETE - SHELDON 115KV CKT 1'
13SP	00NR	0	'FROM->TO'	G11_055	'SHELDON - SW7TH & PLEASANT HILL 115KV CKT 2'	43	0.063	184.49	'CRETE - SHELDON 115KV CKT 1'
12G	09NR	0	'FROM->TO'	G11_055	'SHELDON - SW7TH & PLEASANT HILL 115KV CKT 2'	43	0.063	131.18	'BEATRICE - HARBINE 115KV CKT 1'
13SP	00NR	0	'FROM->TO'	G11_055	'SHELDON - SW7TH & PLEASANT HILL 115KV CKT 2'	43	0.061	155.89	'BEATRICE - HARBINE 115KV CKT 1'
12SP	00NR	0	'FROM->TO'	G11_055	'SHELDON - SW7TH & PLEASANT HILL 115KV CKT 2'	43	0.061	157.10	'BEATRICE - HARBINE 115KV CKT 1'
17SP	00NR	0	'FROM->TO'	G11_055	'SHELDON - SW7TH & PLEASANT HILL 115KV CKT 2'	43	0.061	156.56	'BEATRICE - HARBINE 115KV CKT 1'
12G	09NR	0	'FROM->TO'	G11_055	'SHELDON - SW7TH & PLEASANT HILL 115KV CKT 2'	43	0.060	159.58	'103RD & ROKEBY - MOORE 345KV CKT 1'
12G	09NR	0	'FROM->TO'	G11_055	'SHELDON - SW7TH & PLEASANT HILL 115KV CKT 2'	43	0.060	168.09	'MOORE - NW68TH & HOLDREGE 345KV CKT 1'
12G	09NR	0	'FROM->TO'	G11_055	'SHELDON - SW7TH & PLEASANT HILL 115KV CKT 2'	43	0.060	158.05	'KELLY - MADISONCO 230.00 230KV CKT 1'
12G	09NR	0	'FROM->TO'	G11_055	'SHELDON - SW7TH & PLEASANT HILL 115KV CKT 2'	43	0.060	159.93	'GEN645001 1-FORT CALHOUN 1'
12G	09NR	0	'FROM->TO'	G11_055	'SHELDON - SW7TH & PLEASANT HILL 115KV CKT 2'	43	0.060	151.11	'BASE CASE'
12G	09NR	0	'FROM->TO'	G11_055	'SHELDON - SW7TH & PLEASANT HILL 115KV CKT 2'	43	0.060	144.26	'LN-STOCKVILL'
12G	09NR	0	'FROM->TO'	G11_055	'SHELDON - SW7TH & PLEASANT HILL 115KV CKT 2'	43	0.060	144.23	'LN-1094'
12G	09NR	0	'FROM->TO'	G11_055	'SHELDON - SW7TH & PLEASANT HILL 115KV CKT 2'	43	0.060	144.08	'NEB02WAPAB2'
12G	09NR	0	'FROM->TO'	G11_055	'SHELDON - SW7TH & PLEASANT HILL 115KV CKT 2'	43	0.060	143.51	'LN-WAPA4'
12G	09NR	0	'FROM->TO'	G11_055	'SHELDON - SW7TH & PLEASANT HILL 115KV CKT 2'	43	0.060	141.67	'GEN562029 1-G11_018_3 0.6900'
12G	09NR	0	'FROM->TO'	G11_055	'SHELDON - SW7TH & PLEASANT HILL 115KV CKT 2'	43	0.060	136.52	'GEN560711 1-G10_044_3 0.6900'
12G	09NR	0	'FROM->TO'	G11_055	'SHELDON - SW7TH & PLEASANT HILL 115KV CKT 2'	43	0.060	133.98	'GEN640019 1-SHELDON STATION UNIT 1'
12G	09NR	0	'FROM->TO'	G11_055	'SHELDON - SW7TH & PLEASANT HILL 115KV CKT 2'	43	0.060	125.87	'GEN640020 2-SHELDON STATION UNIT 2'
12SP	00NR	0	'FROM->TO'	G11_055	'SHELDON - SW7TH & PLEASANT HILL 115KV CKT 2'	43	0.060	182.74	'FAIRBURY - HARBINE 115KV CKT 1'
13SP	00NR	0	'FROM->TO'	G11_055	'SHELDON - SW7TH & PLEASANT HILL 115KV CKT 2'	43	0.060	182.04	'FAIRBURY - HARBINE 115KV CKT 1'
17SP	00NR	0	'FROM->TO'	G11_055	'SHELDON - SW7TH & PLEASANT HILL 115KV CKT 2'	43	0.060	183.19	'FAIRBURY - HARBINE 115KV CKT 1'
12SP	00NR	0	'FROM->TO'	G11_055	'SHELDON - SW7TH & PLEASANT HILL 115KV CKT 2'	43	0.059	180.43	'KNOB HILL - STEELE CITY 115KV CKT 1'
17SP	00NR	0	'FROM->TO'	G11_055	'SHELDON - SW7TH & PLEASANT HILL 115KV CKT 2'	43	0.059	167.19	'HARBINE - STEELE CITY 115KV CKT 1'
12G	09NR	0	'FROM->TO'	G11_055	'SHELDON - SW7TH & PLEASANT HILL 115KV CKT 2'	43	0.059	162.54	'84TH & LEIGHTON - WAGENER 115KV CKT 1'
12SP	00NR	0	'FROM->TO'	G11_055	'SHELDON - SW7TH & PLEASANT HILL 115KV CKT 2'	43	0.059	181.63	'MCCOOL - YORK SOUTHWEST 115KV CKT 1'
12SP	00NR	0	'FROM->TO'	G11_055	'SHELDON - SW7TH & PLEASANT HILL 115KV CKT 2'	43	0.059	167.71	'LN-1147'
12SP	00NR	0	'FROM->TO'	G11_055	'SHELDON - SW7TH & PLEASANT HILL 115KV CKT 2'	43	0.059	180.21	'HOYT - STRANGER CREEK 345KV CKT 1'
12SP	00NR	0	'FROM->TO'	G11_055	'SHELDON - SW7TH & PLEASANT HILL 115KV CKT 2'	43	0.059	166.02	'LN-1142'
12SP	00NR	0	'FROM->TO'	G11_055	'SHELDON - SW7TH & PLEASANT HILL 115KV CKT 2'	43	0.059	165.51	'LN-STOCKVILL'
12SP	00NR	0	'FROM->TO'	G11_055	'SHELDON - SW7TH & PLEASANT HILL 115KV CKT 2'	43	0.058	192.16	'LES0001'
12SP	00NR	0	'FROM->TO'	G11_055	'SHELDON - SW7TH & PLEASANT HILL 115KV CKT 2'	43	0.058	174.90	'BASE CASE'
12SP	00NR	0	'FROM->TO'	G11_055	'SHELDON - SW7TH & PLEASANT HILL 115KV CKT 2'	43	0.058	167.67	'LN-TSGT6'
12SP	00NR	0	'FROM->TO'	G11_055	'SHELDON - SW7TH & PLEASANT HILL 115KV CKT 2'	43	0.058	167.05	'NEB02WAPAB2'
12SP	00NR	0	'FROM->TO'	G11_055	'SHELDON - SW7TH & PLEASANT HILL 115KV CKT 2'	43	0.058	161.19	'LN-WAPA4'
12SP	00NR	0	'FROM->TO'	G11_055	'SHELDON - SW7TH & PLEASANT HILL 115KV CKT 2'	43	0.058	160.42	'LN-WAPA2'
12SP	00NR	0	'FROM->TO'	G11_055	'SHELDON - SW7TH & PLEASANT HILL 115KV CKT 2'	43	0.058	167.34	'LN-CALLAWAY'
12SP	00NR	0	'FROM->TO'	G11_055	'SHELDON - SW7TH & PLEASANT HILL 115KV CKT 2'	43	0.058	166.19	'LN-1163'
13SP	00NR	0	'FROM->TO'	G11_055	'SHELDON - SW7TH & PLEASANT HILL 115KV CKT 2'	43	0.058	167.32	'LN-1142'
13SP	00NR	0	'FROM->TO'	G11_055	'SHELDON - SW7TH & PLEASANT HILL 115KV CKT 2'	43	0.058	191.40	'LES0001'
13SP	00NR	0	'FROM->TO'	G11_055	'SHELDON - SW7TH & PLEASANT HILL 115KV CKT 2'	43	0.058	174.30	'BASE CASE'
13SP	00NR	0	'FROM->TO'	G11_055	'SHELDON - SW7TH & PLEASANT HILL 115KV CKT 2'	43	0.058	167.50	'LN-MALONEY'
13SP	00NR	0	'FROM->TO'	G11_055	'SHELDON - SW7TH & PLEASANT HILL 115KV CKT 2'	43	0.058	167.16	'LN-TSGT6'
13SP	00NR	0	'FROM->TO'	G11_055	'SHELDON - SW7TH & PLEASANT HILL 115KV CKT 2'	43	0.058	164.59	'LN-STOCKVILL'
13SP	00NR	0	'FROM->TO'	G11_055	'SHELDON - SW7TH & PLEASANT HILL 115KV CKT 2'	43	0.058	160.22	'LN-WAPA4'
13SP	00NR	0	'FROM->TO'	G11_055	'SHELDON - SW7TH & PLEASANT HILL 115KV CKT 2'	43	0.058	166.29	'LN-CALLAWAY'

SEASON	GROUP	SCENARIO	DIRECTION	SOURCE	MONITORED ELEMENT	RATE B (MVA)	TDF	(%MVA) LOADING	CONTINGENCY
13SP	00NR	0	'FROM->TO'	G11_055	'SHELDON - SW7TH & PLEASANT HILL 115KV CKT 2'	43	0.058	159.35	'LN-WAPA2'
13SP	00NR	0	'FROM->TO'	G11_055	'SHELDON - SW7TH & PLEASANT HILL 115KV CKT 2'	43	0.058	165.38	'LN-1163'
12SP	00NR	0	'FROM->TO'	G11_055	'SHELDON - SW7TH & PLEASANT HILL 115KV CKT 2'	43	0.058	181.88	'STEGALL - WAYSIDE 230KV CKT 1'
12SP	00NR	0	'FROM->TO'	G11_055	'SHELDON - SW7TH & PLEASANT HILL 115KV CKT 2'	43	0.058	165.66	'LN-S-CREEK'
12SP	00NR	0	'FROM->TO'	G11_055	'SHELDON - SW7TH & PLEASANT HILL 115KV CKT 2'	43	0.058	182.79	'ATCHSNT3 345.00 - BOONEVILLE 345KV CKT 1'
12SP	00NR	0	'FROM->TO'	G11_055	'SHELDON - SW7TH & PLEASANT HILL 115KV CKT 2'	43	0.058	182.28	'ATCHSNT3 345.00 - COOPER 345KV CKT 1'
13SP	00NR	0	'FROM->TO'	G11_055	'SHELDON - SW7TH & PLEASANT HILL 115KV CKT 2'	43	0.058	182.06	'ATCHSNT3 345.00 - BOONEVILLE 345KV CKT 1'
13SP	00NR	0	'FROM->TO'	G11_055	'SHELDON - SW7TH & PLEASANT HILL 115KV CKT 2'	43	0.058	181.54	'ATCHSNT3 345.00 - COOPER 345KV CKT 1'
13SP	00NR	0	'FROM->TO'	G11_055	'SHELDON - SW7TH & PLEASANT HILL 115KV CKT 2'	43	0.058	181.33	'STEGALL - WAYSIDE 230KV CKT 1'
13SP	00NR	0	'FROM->TO'	G11_055	'SHELDON - SW7TH & PLEASANT HILL 115KV CKT 2'	43	0.058	164.33	'LN-S-CREEK'
12G	09NR	0	'FROM->TO'	G11_055	'SHELDON - SW7TH & PLEASANT HILL 115KV CKT 2'	43	0.058	173.72	'103RD & ROKEBY - WAGENER 345KV CKT 1'
17SP	00NR	0	'FROM->TO'	G11_055	'SHELDON - SW7TH & PLEASANT HILL 115KV CKT 2'	43	0.058	174.42	'BASE CASE'
17SP	00NR	0	'FROM->TO'	G11_055	'SHELDON - SW7TH & PLEASANT HILL 115KV CKT 2'	43	0.058	165.53	'NEB02WAPAB2'
12G	09NR	0	'FROM->TO'	G11_055	'SHELDON - SW7TH & PLEASANT HILL 115KV CKT 2'	43	0.058	165.68	'WAGENER (T852) 345/115/13.8KV TRANSFORMER CKT 2'
17SP	00NR	0	'FROM->TO'	G11_055	'SHELDON - SW7TH & PLEASANT HILL 115KV CKT 2'	43	0.058	183.30	'ATCHSNT3 345.00 - BOONEVILLE 345KV CKT 1'
17SP	00NR	0	'FROM->TO'	G11_055	'SHELDON - SW7TH & PLEASANT HILL 115KV CKT 2'	43	0.058	182.72	'ATCHSNT3 345.00 - COOPER 345KV CKT 1'
12SP	00NR	0	'FROM->TO'	G11_055	'SHELDON - SW7TH & PLEASANT HILL 115KV CKT 2'	43	0.058	203.09	'MOORE - NW68TH & HOLDREGE 345KV CKT 1'
12G	09NR	0	'FROM->TO'	G11_055	'SHELDON - SW7TH & PLEASANT HILL 115KV CKT 2'	43	0.058	167.00	'WAGENER (T851) 345/115/13.8KV TRANSFORMER CKT 1'
13SP	00NR	0	'FROM->TO'	G11_055	'SHELDON - SW7TH & PLEASANT HILL 115KV CKT 2'	43	0.058	203.04	'MOORE - NW68TH & HOLDREGE 345KV CKT 1'
13SP	00NR	0	'FROM->TO'	G11_055	'SHELDON - SW7TH & PLEASANT HILL 115KV CKT 2'	43	0.058	181.43	'NW68TH & HOLDREGE - SW27TH & F 115KV CKT 1'
17SP	00NR	0	'FROM->TO'	G11_055	'SHELDON - SW7TH & PLEASANT HILL 115KV CKT 2'	43	0.058	205.73	'MOORE - NW68TH & HOLDREGE 345KV CKT 1'
17SP	00NR	0	'FROM->TO'	G11_055	'SHELDON - SW7TH & PLEASANT HILL 115KV CKT 2'	43	0.058	181.48	'NW68TH & HOLDREGE - SW27TH & F 115KV CKT 1'
12SP	00NR	0	'FROM->TO'	G11_055	'SHELDON - SW7TH & PLEASANT HILL 115KV CKT 2'	43	0.058	182.16	'81ST & OLD CHENEY - WAGENER 115KV CKT 1'
13SP	00NR	0	'FROM->TO'	G11_055	'SHELDON - SW7TH & PLEASANT HILL 115KV CKT 2'	43	0.057	181.47	'81ST & OLD CHENEY - WAGENER 115KV CKT 1'
12SP	00NR	0	'FROM->TO'	G11_055	'SHELDON - SW7TH & PLEASANT HILL 115KV CKT 2'	43	0.057	167.74	'27TH & PINE LAKE - ROKEBY 115KV CKT 1'
12SP	00NR	0	'FROM->TO'	G11_055	'SHELDON - SW7TH & PLEASANT HILL 115KV CKT 2'	43	0.057	187.84	'103RD & ROKEBY - MOORE 345KV CKT 1'
13SP	00NR	0	'FROM->TO'	G11_055	'SHELDON - SW7TH & PLEASANT HILL 115KV CKT 2'	43	0.057	166.92	'27TH & PINE LAKE - ROKEBY 115KV CKT 1'
17SP	00NR	0	'FROM->TO'	G11_055	'SHELDON - SW7TH & PLEASANT HILL 115KV CKT 2'	43	0.057	186.29	'103RD & ROKEBY - MOORE 345KV CKT 1'
13SP	00NR	0	'FROM->TO'	G11_055	'SHELDON - SW7TH & PLEASANT HILL 115KV CKT 2'	43	0.057	188.36	'103RD & ROKEBY - MOORE 345KV CKT 1'
17SP	00NR	0	'FROM->TO'	G11_055	'SHELDON - SW7TH & PLEASANT HILL 115KV CKT 2'	43	0.057	181.63	'81ST & OLD CHENEY - WAGENER 115KV CKT 1'
17SP	00NR	0	'FROM->TO'	G11_055	'SHELDON - SW7TH & PLEASANT HILL 115KV CKT 2'	43	0.057	166.05	'27TH & PINE LAKE - ROKEBY 115KV CKT 1'
12SP	00NR	0	'FROM->TO'	G11_055	'SHELDON - SW7TH & PLEASANT HILL 115KV CKT 2'	43	0.057	191.19	'84TH & LEIGHTON - WAGENER 115KV CKT 1'
12SP	00NR	0	'FROM->TO'	G11_055	'SHELDON - SW7TH & PLEASANT HILL 115KV CKT 2'	43	0.057	183.40	'1281LINBUS'
12SP	00NR	0	'FROM->TO'	G11_055	'SHELDON - SW7TH & PLEASANT HILL 115KV CKT 2'	43	0.057	183.39	'SUB 1281 - SUB 1287 161KV CKT 1'
13SP	00NR	0	'FROM->TO'	G11_055	'SHELDON - SW7TH & PLEASANT HILL 115KV CKT 2'	43	0.057	190.32	'84TH & LEIGHTON - WAGENER 115KV CKT 1'
13SP	00NR	0	'FROM->TO'	G11_055	'SHELDON - SW7TH & PLEASANT HILL 115KV CKT 2'	43	0.057	182.43	'1281LINBUS'
13SP	00NR	0	'FROM->TO'	G11_055	'SHELDON - SW7TH & PLEASANT HILL 115KV CKT 2'	43	0.057	182.43	'SUB 1281 - SUB 1287 161KV CKT 1'
17SP	00NR	0	'FROM->TO'	G11_055	'SHELDON - SW7TH & PLEASANT HILL 115KV CKT 2'	43	0.057	190.67	'84TH & LEIGHTON - WAGENER 115KV CKT 1'
17SP	00NR	0	'FROM->TO'	G11_055	'SHELDON - SW7TH & PLEASANT HILL 115KV CKT 2'	43	0.057	182.89	'SUB 1281 - SUB 1287 161KV CKT 1'
12SP	00NR	0	'FROM->TO'	G11_055	'SHELDON - SW7TH & PLEASANT HILL 115KV CKT 2'	43	0.057	194.07	'WAGENER (T852) 345/115/13.8KV TRANSFORMER CKT 2'
13SP	00NR	0	'FROM->TO'	G11_055	'SHELDON - SW7TH & PLEASANT HILL 115KV CKT 2'	43	0.057	193.32	'WAGENER (T852) 345/115/13.8KV TRANSFORMER CKT 2'
12SP	00NR	0	'FROM->TO'	G11_055	'SHELDON - SW7TH & PLEASANT HILL 115KV CKT 2'	43	0.057	206.36	'103RD & ROKEBY - WAGENER 345KV CKT 1'
13SP	00NR	0	'FROM->TO'	G11_055	'SHELDON - SW7TH & PLEASANT HILL 115KV CKT 2'	43	0.057	206.10	'103RD & ROKEBY - WAGENER 345KV CKT 1'
12SP	00NR	0	'FROM->TO'	G11_055	'SHELDON - SW7TH & PLEASANT HILL 115KV CKT 2'	43	0.056	195.83	'WAGENER (T851) 345/115/13.8KV TRANSFORMER CKT 1'
13SP	00NR	0	'FROM->TO'	G11_055	'SHELDON - SW7TH & PLEASANT HILL 115KV CKT 2'	43	0.056	195.06	'WAGENER (T851) 345/115/13.8KV TRANSFORMER CKT 1'
17SP	00NR	0	'FROM->TO'	G11_055	'SHELDON - SW7TH & PLEASANT HILL 115KV CKT 2'	43	0.056	194.51	'WAGENER (T852) 345/115/13.8KV TRANSFORMER CKT 2'
17SP	00NR	0	'FROM->TO'	G11_055	'SHELDON - SW7TH & PLEASANT HILL 115KV CKT 2'	43	0.056	210.53	'103RD & ROKEBY - WAGENER 345KV CKT 1'
17SP	00NR	0	'FROM->TO'	G11_055	'SHELDON - SW7TH & PLEASANT HILL 115KV CKT 2'	43	0.056	196.34	'WAGENER (T851) 345/115/13.8KV TRANSFORMER CKT 1'
12G	09NR	0	'FROM->TO'	G11_055	'SHELDON - SW7TH & PLEASANT HILL 115KV CKT 2'	43	0.055	184.40	'NW68TH & HOLDREGE (T141) 345/115/13.8KV TRANSFORMER CKT 1'
12G	09NR	0	'FROM->TO'	G11_055	'SHELDON - SW7TH & PLEASANT HILL 115KV CKT 2'	43	0.055	144.03	'ROKEBY - SW7TH & PLEASANT HILL 115KV CKT 1'
12SP	00NR	0	'FROM->TO'	G11_055	'SHELDON - SW7TH & PLEASANT HILL 115KV CKT 2'	43	0.054	219.11	'NW68TH & HOLDREGE (T141) 345/115/13.8KV TRANSFORMER CKT 1'
13SP	00NR	0	'FROM->TO'	G11_055	'SHELDON - SW7TH & PLEASANT HILL 115KV CKT 2'	43	0.053	218.41	'NW68TH & HOLDREGE (T141) 345/115/13.8KV TRANSFORMER CKT 1'
17SP	00NR	0	'FROM->TO'	G11_055	'SHELDON - SW7TH & PLEASANT HILL 115KV CKT 2'	43	0.053	219.69	'NW68TH & HOLDREGE (T141) 345/115/13.8KV TRANSFORMER CKT 1'
12G	09NR	0	'FROM->TO'	G11_055	'SHELDON - SW7TH & PLEASANT HILL 115KV CKT 2'	43	0.051	119.60	'20TH & PIONEERS - SW7TH & PLEASANT HILL 115KV CKT 1'
12SP	00NR	0	'FROM->TO'	G11_055	'SHELDON - SW7TH & PLEASANT HILL 115KV CKT 2'	43	0.049	133.18	'20TH & PIONEERS - SW7TH & PLEASANT HILL 115KV CKT 1'
13SP	00NR	0	'FROM->TO'	G11_055	'SHELDON - SW7TH & PLEASANT HILL 115KV CKT 2'	43	0.049	132.08	'20TH & PIONEERS - SW7TH & PLEASANT HILL 115KV CKT 1'
17SP	00NR	0	'FROM->TO'	G11_055	'SHELDON - SW7TH & PLEASANT HILL 115KV CKT 2'	43	0.049	129.15	'20TH & PIONEERS - SW7TH & PLEASANT HILL 115KV CKT 1'
12G	03ALL	0		G11_055	NCONV-Blown Up	0	0.043	9999.00	'DBL-THIS-CLR'
12G	03ALL2	0		G11_055	NCONV-Blown Up	0	0.043	9999.00	'DBL-THIS-CLR'
12G	03ALL	0		G11_055	NCONV-Iteration Limit	0	0.031	9999.00	'DBL-MATT-TAT'
12G	03ALL2	0		G11_055	NCONV-Iteration Limit	0	0.031	9999.00	'DBL-MATT-TAT'
17WP	00NR	2	'TO->FROM'	G11_055	'NEB CITY U SYR SUB - SUB 970 69KV CKT 1'	47	0.172	106.88	'SUB 963 - SUB 977 69KV CKT 1'
17WP	00NR	2	'TO->FROM'	G11_055	'NEB CITY U SYR SUB - SUB 970 69KV CKT 1'	47	0.172	105.53	'NEB CITY U SUB 903 - SUB 977 69KV CKT 1'
12WP	00NR	2	'TO->FROM'	G11_055	'NEB CITY U SYR SUB - SUB 970 69KV CKT 1'	47	0.172	103.11	'SUB 963 - SUB 977 69KV CKT 1'
12WP	00NR	2	'TO->FROM'	G11_055	'NEB CITY U SYR SUB - SUB 970 69KV CKT 1'	47	0.172	101.72	'NEB CITY U SUB 903 - SUB 977 69KV CKT 1'
13WP	00NR	2	'TO->FROM'	G11_055	'NEB CITY U SYR SUB - SUB 970 69KV CKT 1'	47	0.172	104.50	'SUB 963 - SUB 977 69KV CKT 1'
13WP	00NR	2	'TO->FROM'	G11_055	'NEB CITY U SYR SUB - SUB 970 69KV CKT 1'	47	0.172	103.16	'NEB CITY U SUB 903 - SUB 977 69KV CKT 1'
17SP	00NR	2	'TO->FROM'	G11_055	'NEB CITY U SYR SUB - SUB 970 69KV CKT 1'	47	0.172	111.56	'SUB 963 - SUB 977 69KV CKT 1'
17SP	00NR	2	'TO->FROM'	G11_055	'NEB CITY U SYR SUB - SUB 970 69KV CKT 1'	47	0.172	110.27	'NEB CITY U SUB 903 - SUB 977 69KV CKT 1'
17SP	00NR	2	'TO->FROM'	G11_055	'HYDROCARBON TAP - SUB 974 69KV CKT 1'	57	0.172	105.35	'SUB 963 - SUB 977 69KV CKT 1'
17SP	00NR	2	'TO->FROM'	G11_055	'HYDROCARBON TAP - SUB 974 69KV CKT 1'	57	0.172	104.26	'NEB CITY U SUB 903 - SUB 977 69KV CKT 1'
12SP	00NR	2	'TO->FROM'	G11_055	'NEB CITY U SYR SUB - SUB 970 69KV CKT 1'	47	0.172	102.96	'SUB 963 - SUB 977 69KV CKT 1'
12SP	00NR	2	'TO->FROM'	G11_055	'NEB CITY U SYR SUB - SUB 970 69KV CKT 1'	47	0.172	101.69	'NEB CITY U SUB 903 - SUB 977 69KV CKT 1'
13SP	00NR	2	'TO->FROM'	G11_055	'NEB CITY U SYR SUB - SUB 970 69KV CKT 1'	47	0.172	103.71	'SUB 963 - SUB 977 69KV CKT 1'
13SP	00NR	2	'TO->FROM'	G11_055	'NEB CITY U SYR SUB - SUB 970 69KV CKT 1'	47	0.172	102.43	'NEB CITY U SUB 903 - SUB 977 69KV CKT 1'
12G	09NR	2	'FROM->TO'	G11_055	'SHELDON - SW7TH & PLEASANT HILL 115KV CKT 2'	43	0.124	142.30	'MOORE (MOORE T1) 345/115/13.8KV TRANSFORMER CKT 1'
12SP	00NR	2	'FROM->TO'	G11_055	'SHELDON - SW7TH & PLEASANT HILL 115KV CKT 2'	43	0.122	132.29	'MOORE (MOORE T1) 345/115/13.8KV TRANSFORMER CKT 1'
13SP	00NR	2	'FROM->TO'	G11_055	'SHELDON - SW7TH & PLEASANT HILL 115KV CKT 2'	43	0.122	130.76	'MOORE (MOORE T1) 345/115/13.8KV TRANSFORMER CKT 1'

SEASON	GROUP	SCENARIO	DIRECTION	SOURCE	MONITORED ELEMENT	RATE B (MVA)	TDF	(%MVA) LOADING	CONTINGENCY
17SP	00NR	2	'FROM->TO'	G11_055	'SHELDON - SW7TH & PLEASANT HILL 115KV CKT 2'	43	0.121	129.45	'MOORE (MOORE T1) 345/115/13.8KV TRANSFORMER CKT 1'
12G	09NR	2	'FROM->TO'	G11_055	'SHELDON - SW7TH & PLEASANT HILL 115KV CKT 2'	43	0.093	238.24	'SHELDON - SW7TH & PLEASANT HILL 115KV CKT 1'
12WP	00NR	2	'FROM->TO'	G11_055	'SHELDON - SW7TH & PLEASANT HILL 115KV CKT 2'	105	0.091	115.89	'SHELDON - SW7TH & PLEASANT HILL 115KV CKT 1'
13WP	00NR	2	'FROM->TO'	G11_055	'SHELDON - SW7TH & PLEASANT HILL 115KV CKT 2'	105	0.090	116.17	'SHELDON - SW7TH & PLEASANT HILL 115KV CKT 1'
17WP	00NR	2	'FROM->TO'	G11_055	'SHELDON - SW7TH & PLEASANT HILL 115KV CKT 2'	105	0.090	114.34	'SHELDON - SW7TH & PLEASANT HILL 115KV CKT 1'
12SP	00NR	2	'FROM->TO'	G11_055	'SHELDON - SW7TH & PLEASANT HILL 115KV CKT 2'	43	0.090	277.59	'SHELDON - SW7TH & PLEASANT HILL 115KV CKT 1'
13SP	00NR	2	'FROM->TO'	G11_055	'SHELDON - SW7TH & PLEASANT HILL 115KV CKT 2'	43	0.090	276.76	'SHELDON - SW7TH & PLEASANT HILL 115KV CKT 1'
17SP	00NR	2	'FROM->TO'	G11_055	'SHELDON - SW7TH & PLEASANT HILL 115KV CKT 2'	43	0.090	276.99	'SHELDON - SW7TH & PLEASANT HILL 115KV CKT 1'
12G	09NR	2	'FROM->TO'	G11_055	'SHELDON - SW7TH & PLEASANT HILL 115KV CKT 2'	43	0.077	160.96	'HYDROCARBON TAP - SUB 974 69KV CKT 1'
12G	09NR	2	'FROM->TO'	G11_055	'SHELDON - SW7TH & PLEASANT HILL 115KV CKT 2'	43	0.077	160.95	'HYDROCARBON TAP - SUB 970 69KV CKT 1'
12SP	00NR	2	'FROM->TO'	G11_055	'SHELDON - SW7TH & PLEASANT HILL 115KV CKT 2'	43	0.075	187.65	'ENRONTAP'
12SP	00NR	2	'FROM->TO'	G11_055	'SHELDON - SW7TH & PLEASANT HILL 115KV CKT 2'	43	0.075	187.65	'HYDROCARBON TAP - SUB 974 69KV CKT 1'
12SP	00NR	2	'FROM->TO'	G11_055	'SHELDON - SW7TH & PLEASANT HILL 115KV CKT 2'	43	0.075	187.65	'HYDROCARBON TAP - SUB 970 69KV CKT 1'
12SP	00NR	2	'FROM->TO'	G11_055	'SHELDON - SW7TH & PLEASANT HILL 115KV CKT 2'	43	0.075	186.16	'NEB CITY U SYR SUB - SUB 970 69KV CKT 1'
13SP	00NR	2	'FROM->TO'	G11_055	'SHELDON - SW7TH & PLEASANT HILL 115KV CKT 2'	43	0.075	187.23	'ENRONTAP'
13SP	00NR	2	'FROM->TO'	G11_055	'SHELDON - SW7TH & PLEASANT HILL 115KV CKT 2'	43	0.075	187.23	'HYDROCARBON TAP - SUB 974 69KV CKT 1'
13SP	00NR	2	'FROM->TO'	G11_055	'SHELDON - SW7TH & PLEASANT HILL 115KV CKT 2'	43	0.075	187.23	'HYDROCARBON TAP - SUB 970 69KV CKT 1'
13SP	00NR	2	'FROM->TO'	G11_055	'SHELDON - SW7TH & PLEASANT HILL 115KV CKT 2'	43	0.075	185.74	'NEB CITY U SYR SUB - SUB 970 69KV CKT 1'
17SP	00NR	2	'FROM->TO'	G11_055	'SHELDON - SW7TH & PLEASANT HILL 115KV CKT 2'	43	0.075	188.05	'HYDROCARBON TAP - SUB 974 69KV CKT 1'
17SP	00NR	2	'FROM->TO'	G11_055	'SHELDON - SW7TH & PLEASANT HILL 115KV CKT 2'	43	0.075	188.05	'HYDROCARBON TAP - SUB 970 69KV CKT 1'
17SP	00NR	2	'FROM->TO'	G11_055	'SHELDON - SW7TH & PLEASANT HILL 115KV CKT 2'	43	0.075	186.43	'NEB CITY U SYR SUB - SUB 970 69KV CKT 1'
17SP	00NR	2	'FROM->TO'	G11_055	'SHELDON - SW7TH & PLEASANT HILL 115KV CKT 2'	43	0.075	185.53	'NEB CITY U SYR SUB - SUB 971 69KV CKT 1'
12SP	00NR	2	'FROM->TO'	G11_055	'SHELDON - SW7TH & PLEASANT HILL 115KV CKT 2'	43	0.066	171.58	'COOPER - SUB 1280 161KV CKT 1'
13SP	00NR	2	'FROM->TO'	G11_055	'SHELDON - SW7TH & PLEASANT HILL 115KV CKT 2'	43	0.066	171.43	'COOPER - SUB 1280 161KV CKT 1'
17SP	00NR	2	'FROM->TO'	G11_055	'SHELDON - SW7TH & PLEASANT HILL 115KV CKT 2'	43	0.065	170.64	'COOPER - SUB 1280 161KV CKT 1'
12G	09NR	2	'FROM->TO'	G11_055	'SHELDON - SW7TH & PLEASANT HILL 115KV CKT 2'	43	0.061	146.69	'BEATRICE - HARBINE 115KV CKT 1'
12G	09NR	2	'FROM->TO'	G11_055	'SHELDON - SW7TH & PLEASANT HILL 115KV CKT 2'	43	0.061	145.11	'HARBINE - STEELE CITY 115KV CKT 1'
12SP	00NR	2	'FROM->TO'	G11_055	'SHELDON - SW7TH & PLEASANT HILL 115KV CKT 2'	43	0.060	185.57	'FAIRBURY - HARBINE 115KV CKT 1'
12G	09NR	2	'FROM->TO'	G11_055	'SHELDON - SW7TH & PLEASANT HILL 115KV CKT 2'	43	0.060	162.36	'103RD & ROKEBY - MOORE 345KV CKT 1'
12G	09NR	2	'FROM->TO'	G11_055	'SHELDON - SW7TH & PLEASANT HILL 115KV CKT 2'	43	0.060	170.93	'MOORE - NW68TH & HOLDREGE 345KV CKT 1'
12G	09NR	2	'FROM->TO'	G11_055	'SHELDON - SW7TH & PLEASANT HILL 115KV CKT 2'	43	0.060	161.08	'KELLY - MADISONCO 230.00 230KV CKT 1'
12G	09NR	2	'FROM->TO'	G11_055	'SHELDON - SW7TH & PLEASANT HILL 115KV CKT 2'	43	0.060	154.10	'BASE CASE'
17SP	00NR	2	'FROM->TO'	G11_055	'SHELDON - SW7TH & PLEASANT HILL 115KV CKT 2'	43	0.060	186.22	'FAIRBURY - HARBINE 115KV CKT 1'
12SP	00NR	2	'FROM->TO'	G11_055	'SHELDON - SW7TH & PLEASANT HILL 115KV CKT 2'	43	0.060	171.95	'BEATRICE - HARBINE 115KV CKT 1'
12SP	00NR	2	'FROM->TO'	G11_055	'SHELDON - SW7TH & PLEASANT HILL 115KV CKT 2'	43	0.059	173.69	'CLIFTON - GREENLEAF 115KV CKT 1'
12SP	00NR	2	'FROM->TO'	G11_055	'SHELDON - SW7TH & PLEASANT HILL 115KV CKT 2'	43	0.059	169.58	'HARBINE - STEELE CITY 115KV CKT 1'
13SP	00NR	2	'FROM->TO'	G11_055	'SHELDON - SW7TH & PLEASANT HILL 115KV CKT 2'	43	0.059	169.05	'HARBINE - STEELE CITY 115KV CKT 1'
17SP	00NR	2	'FROM->TO'	G11_055	'SHELDON - SW7TH & PLEASANT HILL 115KV CKT 2'	43	0.059	168.81	'HARBINE - STEELE CITY 115KV CKT 1'
12G	09NR	2	'FROM->TO'	G11_055	'SHELDON - SW7TH & PLEASANT HILL 115KV CKT 2'	43	0.059	165.47	'84TH & LEIGHTON - WAGENER 115KV CKT 1'
12SP	00NR	2	'FROM->TO'	G11_055	'SHELDON - SW7TH & PLEASANT HILL 115KV CKT 2'	43	0.058	171.53	'LN-1147'
12SP	00NR	2	'FROM->TO'	G11_055	'SHELDON - SW7TH & PLEASANT HILL 115KV CKT 2'	43	0.058	169.83	'LN-1142'
12SP	00NR	2	'FROM->TO'	G11_055	'SHELDON - SW7TH & PLEASANT HILL 115KV CKT 2'	43	0.058	195.99	'LES0001'
12SP	00NR	2	'FROM->TO'	G11_055	'SHELDON - SW7TH & PLEASANT HILL 115KV CKT 2'	43	0.058	178.65	'BASE CASE'
12SP	00NR	2	'FROM->TO'	G11_055	'SHELDON - SW7TH & PLEASANT HILL 115KV CKT 2'	43	0.058	171.47	'LN-TSGT6'
12SP	00NR	2	'FROM->TO'	G11_055	'SHELDON - SW7TH & PLEASANT HILL 115KV CKT 2'	43	0.058	170.91	'NEB02WAPAB2'
12SP	00NR	2	'FROM->TO'	G11_055	'SHELDON - SW7TH & PLEASANT HILL 115KV CKT 2'	43	0.058	169.27	'LN-STOCKVILL'
12SP	00NR	2	'FROM->TO'	G11_055	'SHELDON - SW7TH & PLEASANT HILL 115KV CKT 2'	43	0.058	164.94	'LN-WAPA4'
12SP	00NR	2	'FROM->TO'	G11_055	'SHELDON - SW7TH & PLEASANT HILL 115KV CKT 2'	43	0.058	171.09	'LN-CALLAWAY'
12SP	00NR	2	'FROM->TO'	G11_055	'SHELDON - SW7TH & PLEASANT HILL 115KV CKT 2'	43	0.058	164.18	'LN-WAPA2'
12SP	00NR	2	'FROM->TO'	G11_055	'SHELDON - SW7TH & PLEASANT HILL 115KV CKT 2'	43	0.058	185.91	'DBL-MATT-TAT'
12SP	00NR	2	'FROM->TO'	G11_055	'SHELDON - SW7TH & PLEASANT HILL 115KV CKT 2'	43	0.058	169.94	'LN-1163'
13SP	00NR	2	'FROM->TO'	G11_055	'SHELDON - SW7TH & PLEASANT HILL 115KV CKT 2'	43	0.058	195.41	'LES0001'
13SP	00NR	2	'FROM->TO'	G11_055	'SHELDON - SW7TH & PLEASANT HILL 115KV CKT 2'	43	0.058	178.15	'BASE CASE'
13SP	00NR	2	'FROM->TO'	G11_055	'SHELDON - SW7TH & PLEASANT HILL 115KV CKT 2'	43	0.058	171.39	'LN-MALONEY'
13SP	00NR	2	'FROM->TO'	G11_055	'SHELDON - SW7TH & PLEASANT HILL 115KV CKT 2'	43	0.058	171.23	'LN-1142'
13SP	00NR	2	'FROM->TO'	G11_055	'SHELDON - SW7TH & PLEASANT HILL 115KV CKT 2'	43	0.058	171.07	'LN-TSGT6'
13SP	00NR	2	'FROM->TO'	G11_055	'SHELDON - SW7TH & PLEASANT HILL 115KV CKT 2'	43	0.058	168.52	'LN-STOCKVILL'
13SP	00NR	2	'FROM->TO'	G11_055	'SHELDON - SW7TH & PLEASANT HILL 115KV CKT 2'	43	0.058	164.14	'LN-WAPA4'
13SP	00NR	2	'FROM->TO'	G11_055	'SHELDON - SW7TH & PLEASANT HILL 115KV CKT 2'	43	0.058	170.19	'LN-CALLAWAY'
13SP	00NR	2	'FROM->TO'	G11_055	'SHELDON - SW7TH & PLEASANT HILL 115KV CKT 2'	43	0.058	163.27	'LN-WAPA2'
12SP	00NR	2	'FROM->TO'	G11_055	'SHELDON - SW7TH & PLEASANT HILL 115KV CKT 2'	43	0.058	185.64	'STEGALL - WAYSIDE 230KV CKT 1'
13SP	00NR	2	'FROM->TO'	G11_055	'SHELDON - SW7TH & PLEASANT HILL 115KV CKT 2'	43	0.058	185.41	'DBL-MATT-TAT'
17SP	00NR	2	'FROM->TO'	G11_055	'SHELDON - SW7TH & PLEASANT HILL 115KV CKT 2'	43	0.058	185.23	'MCCOOL - YORK SOUTHWEST 115KV CKT 1'
12SP	00NR	2	'FROM->TO'	G11_055	'SHELDON - SW7TH & PLEASANT HILL 115KV CKT 2'	43	0.058	169.41	'LN-S-CREEK'
13SP	00NR	2	'FROM->TO'	G11_055	'SHELDON - SW7TH & PLEASANT HILL 115KV CKT 2'	43	0.058	168.95	'LN-1163'
12SP	00NR	2	'FROM->TO'	G11_055	'SHELDON - SW7TH & PLEASANT HILL 115KV CKT 2'	43	0.058	186.69	'ATCHSNT3 345.00 - BOONEVILLE 345KV CKT 1'
12SP	00NR	2	'FROM->TO'	G11_055	'SHELDON - SW7TH & PLEASANT HILL 115KV CKT 2'	43	0.058	186.16	'ATCHSNT3 345.00 - COOPER 345KV CKT 1'
13SP	00NR	2	'FROM->TO'	G11_055	'SHELDON - SW7TH & PLEASANT HILL 115KV CKT 2'	43	0.058	186.08	'ATCHSNT3 345.00 - BOONEVILLE 345KV CKT 1'
13SP	00NR	2	'FROM->TO'	G11_055	'SHELDON - SW7TH & PLEASANT HILL 115KV CKT 2'	43	0.058	185.54	'ATCHSNT3 345.00 - COOPER 345KV CKT 1'
13SP	00NR	2	'FROM->TO'	G11_055	'SHELDON - SW7TH & PLEASANT HILL 115KV CKT 2'	43	0.058	185.21	'STEGALL - WAYSIDE 230KV CKT 1'
13SP	00NR	2	'FROM->TO'	G11_055	'SHELDON - SW7TH & PLEASANT HILL 115KV CKT 2'	43	0.058	167.91	'LN-S-CREEK'
12G	09NR	2	'FROM->TO'	G11_055	'SHELDON - SW7TH & PLEASANT HILL 115KV CKT 2'	43	0.058	176.59	'103RD & ROKEBY - WAGENER 345KV CKT 1'
17SP	00NR	2	'FROM->TO'	G11_055	'SHELDON - SW7TH & PLEASANT HILL 115KV CKT 2'	43	0.058	178.27	'BASE CASE'
12G	09NR	2	'FROM->TO'	G11_055	'SHELDON - SW7TH & PLEASANT HILL 115KV CKT 2'	43	0.058	168.59	'WAGENER (T852) 345/115/13.8KV TRANSFORMER CKT 2'
17SP	00NR	2	'FROM->TO'	G11_055	'SHELDON - SW7TH & PLEASANT HILL 115KV CKT 2'	43	0.058	187.31	'ATCHSNT3 345.00 - BOONEVILLE 345KV CKT 1'
17SP	00NR	2	'FROM->TO'	G11_055	'SHELDON - SW7TH & PLEASANT HILL 115KV CKT 2'	43	0.058	186.78	'ATCHSNT3 345.00 - COOPER 345KV CKT 1'
12G	09NR	2	'FROM->TO'	G11_055	'SHELDON - SW7TH & PLEASANT HILL 115KV CKT 2'	43	0.058	169.91	'WAGENER (T851) 345/115/13.8KV TRANSFORMER CKT 1'
12SP	00NR	2	'FROM->TO'	G11_055	'SHELDON - SW7TH & PLEASANT HILL 115KV CKT 2'	43	0.058	207.06	'MOORE - NW68TH & HOLDREGE 345KV CKT 1'

SEASON	GROUP	SCENARIO	DIRECTION	SOURCE	MONITORED ELEMENT	RATE B (MVA)	TDF	(%MVA) LOADING	CONTINGENCY
13SP	00NR	2	'FROM->TO'	G11_055	'SHELDON - SW7TH & PLEASANT HILL 115KV CKT 2'	43	0.058	207.06	'MOORE - NW68TH & HOLDREGE 345KV CKT 1'
13SP	00NR	2	'FROM->TO'	G11_055	'SHELDON - SW7TH & PLEASANT HILL 115KV CKT 2'	43	0.058	185.25	'NW68TH & HOLDREGE - SW27TH & F 115KV CKT 1'
17SP	00NR	2	'FROM->TO'	G11_055	'SHELDON - SW7TH & PLEASANT HILL 115KV CKT 2'	43	0.058	209.85	'MOORE - NW68TH & HOLDREGE 345KV CKT 1'
17SP	00NR	2	'FROM->TO'	G11_055	'SHELDON - SW7TH & PLEASANT HILL 115KV CKT 2'	43	0.057	185.29	'NW68TH & HOLDREGE - SW27TH & F 115KV CKT 1'
13SP	00NR	2	'FROM->TO'	G11_055	'SHELDON - SW7TH & PLEASANT HILL 115KV CKT 2'	43	0.057	185.26	'81ST & OLD CHENEY - WAGENER 115KV CKT 1'
12SP	00NR	2	'FROM->TO'	G11_055	'SHELDON - SW7TH & PLEASANT HILL 115KV CKT 2'	43	0.057	171.47	'27TH & PINE LAKE - ROKEBY 115KV CKT 1'
12SP	00NR	2	'FROM->TO'	G11_055	'SHELDON - SW7TH & PLEASANT HILL 115KV CKT 2'	43	0.057	191.77	'103RD & ROKEBY - MOORE 345KV CKT 1'
13SP	00NR	2	'FROM->TO'	G11_055	'SHELDON - SW7TH & PLEASANT HILL 115KV CKT 2'	43	0.057	170.66	'27TH & PINE LAKE - ROKEBY 115KV CKT 1'
17SP	00NR	2	'FROM->TO'	G11_055	'SHELDON - SW7TH & PLEASANT HILL 115KV CKT 2'	43	0.057	190.27	'103RD & ROKEBY - MOORE 345KV CKT 1'
13SP	00NR	2	'FROM->TO'	G11_055	'SHELDON - SW7TH & PLEASANT HILL 115KV CKT 2'	43	0.057	192.41	'103RD & ROKEBY - MOORE 345KV CKT 1'
17SP	00NR	2	'FROM->TO'	G11_055	'SHELDON - SW7TH & PLEASANT HILL 115KV CKT 2'	43	0.057	185.41	'81ST & OLD CHENEY - WAGENER 115KV CKT 1'
17SP	00NR	2	'FROM->TO'	G11_055	'SHELDON - SW7TH & PLEASANT HILL 115KV CKT 2'	43	0.057	169.78	'27TH & PINE LAKE - ROKEBY 115KV CKT 1'
12SP	00NR	2	'FROM->TO'	G11_055	'SHELDON - SW7TH & PLEASANT HILL 115KV CKT 2'	43	0.057	194.83	'84TH & LEIGHTON - WAGENER 115KV CKT 1'
13SP	00NR	2	'FROM->TO'	G11_055	'SHELDON - SW7TH & PLEASANT HILL 115KV CKT 2'	43	0.057	194.06	'84TH & LEIGHTON - WAGENER 115KV CKT 1'
13SP	00NR	2	'FROM->TO'	G11_055	'SHELDON - SW7TH & PLEASANT HILL 115KV CKT 2'	43	0.057	186.09	'1281LINBUS'
13SP	00NR	2	'FROM->TO'	G11_055	'SHELDON - SW7TH & PLEASANT HILL 115KV CKT 2'	43	0.057	186.14	'SUB 1281 - SUB 1287 161KV CKT 1'
17SP	00NR	2	'FROM->TO'	G11_055	'SHELDON - SW7TH & PLEASANT HILL 115KV CKT 2'	43	0.057	194.46	'84TH & LEIGHTON - WAGENER 115KV CKT 1'
17SP	00NR	2	'FROM->TO'	G11_055	'SHELDON - SW7TH & PLEASANT HILL 115KV CKT 2'	43	0.057	186.70	'SUB 1281 - SUB 1287 161KV CKT 1'
12SP	00NR	2	'FROM->TO'	G11_055	'SHELDON - SW7TH & PLEASANT HILL 115KV CKT 2'	43	0.056	197.79	'WAGENER (T852) 345/115/13.8KV TRANSFORMER CKT 2'
12SP	00NR	2	'FROM->TO'	G11_055	'SHELDON - SW7TH & PLEASANT HILL 115KV CKT 2'	43	0.056	210.30	'103RD & ROKEBY - WAGENER 345KV CKT 1'
13SP	00NR	2	'FROM->TO'	G11_055	'SHELDON - SW7TH & PLEASANT HILL 115KV CKT 2'	43	0.056	197.01	'WAGENER (T852) 345/115/13.8KV TRANSFORMER CKT 2'
13SP	00NR	2	'FROM->TO'	G11_055	'SHELDON - SW7TH & PLEASANT HILL 115KV CKT 2'	43	0.056	210.18	'103RD & ROKEBY - WAGENER 345KV CKT 1'
12SP	00NR	2	'FROM->TO'	G11_055	'SHELDON - SW7TH & PLEASANT HILL 115KV CKT 2'	43	0.056	199.54	'WAGENER (T851) 345/115/13.8KV TRANSFORMER CKT 1'
13SP	00NR	2	'FROM->TO'	G11_055	'SHELDON - SW7TH & PLEASANT HILL 115KV CKT 2'	43	0.056	198.75	'WAGENER (T851) 345/115/13.8KV TRANSFORMER CKT 1'
17SP	00NR	2	'FROM->TO'	G11_055	'SHELDON - SW7TH & PLEASANT HILL 115KV CKT 2'	43	0.056	198.31	'WAGENER (T852) 345/115/13.8KV TRANSFORMER CKT 2'
17SP	00NR	2	'FROM->TO'	G11_055	'SHELDON - SW7TH & PLEASANT HILL 115KV CKT 2'	43	0.056	214.58	'103RD & ROKEBY - WAGENER 345KV CKT 1'
17SP	00NR	2	'FROM->TO'	G11_055	'SHELDON - SW7TH & PLEASANT HILL 115KV CKT 2'	43	0.056	200.14	'WAGENER (T851) 345/115/13.8KV TRANSFORMER CKT 1'
12G	09NR	2	'FROM->TO'	G11_055	'SHELDON - SW7TH & PLEASANT HILL 115KV CKT 2'	43	0.055	187.14	'NW68TH & HOLDREGE (T141) 345/115/13.8KV TRANSFORMER CKT 1'
12G	09NR	2	'FROM->TO'	G11_055	'SHELDON - SW7TH & PLEASANT HILL 115KV CKT 2'	43	0.055	146.71	'ROKEBY - SW7TH & PLEASANT HILL 115KV CKT 1'
12SP	00NR	2	'FROM->TO'	G11_055	'SHELDON - SW7TH & PLEASANT HILL 115KV CKT 2'	43	0.053	222.64	'NW68TH & HOLDREGE (T141) 345/115/13.8KV TRANSFORMER CKT 1'
13SP	00NR	2	'FROM->TO'	G11_055	'SHELDON - SW7TH & PLEASANT HILL 115KV CKT 2'	43	0.053	222.06	'NW68TH & HOLDREGE (T141) 345/115/13.8KV TRANSFORMER CKT 1'
17SP	00NR	2	'FROM->TO'	G11_055	'SHELDON - SW7TH & PLEASANT HILL 115KV CKT 2'	43	0.053	223.39	'NW68TH & HOLDREGE (T141) 345/115/13.8KV TRANSFORMER CKT 1'
12G	09NR	2	'FROM->TO'	G11_055	'SHELDON - SW7TH & PLEASANT HILL 115KV CKT 2'	43	0.051	122.06	'20TH & PIONEERS - SW7TH & PLEASANT HILL 115KV CKT 1'
12SP	00NR	2	'FROM->TO'	G11_055	'SHELDON - SW7TH & PLEASANT HILL 115KV CKT 2'	43	0.049	136.23	'20TH & PIONEERS - SW7TH & PLEASANT HILL 115KV CKT 1'
13SP	00NR	2	'FROM->TO'	G11_055	'SHELDON - SW7TH & PLEASANT HILL 115KV CKT 2'	43	0.049	135.21	'20TH & PIONEERS - SW7TH & PLEASANT HILL 115KV CKT 1'
17SP	00NR	2	'FROM->TO'	G11_055	'SHELDON - SW7TH & PLEASANT HILL 115KV CKT 2'	43	0.049	132.09	'20TH & PIONEERS - SW7TH & PLEASANT HILL 115KV CKT 1'
17SP	00NR	3	'TO->FROM'	G11_055	'HYDROCARBON TAP - SUB 974 69KV CKT 1'	57	0.172	104.93	'SUB 963 - SUB 977 69KV CKT 1'
17SP	00NR	3	'TO->FROM'	G11_055	'HYDROCARBON TAP - SUB 974 69KV CKT 1'	57	0.172	103.83	'NEB CITY U SUB 903 - SUB 977 69KV CKT 1'
12G	03ALL	0		G11_057	NCONV-Iteration Limit	1792	0.015	47.07	'G11-17T 345.00 - POST ROCK 345KV CKT 1'
12G	09BPSALL	0		G11_057	NCONV-Iteration Limit	0	0.012	9999.00	'SPP-AEPW-12'
12G	09BPSALL	0		G11_057	NCONV-Iteration Limit	0	0.011	9999.00	'SPP-AEPW-19'
12SP	00G11_058	0		G11_058	NCONV-Iteration Limit	478	0.925	25.77	'G11_058T 230.00 - GRASSLAND INTERCHANGE 230KV CKT 1'
12WP	0	0	'FROM->TO'	G11_058	'TUCO INTERCHANGE (GE M1022338) 345/230/13.2KV TRANSFORMER CKT 1'	560	0.462	121.62	'TUCO INTERCHANGE (UPDATE DATA) 345/230/13.2KV TRANSFORMER CKT 2'
12WP	0	0	'FROM->TO'	G11_058	'TUCO INTERCHANGE (GE M1022338) 345/230/13.2KV TRANSFORMER CKT 1'	560	0.462	121.40	'TUCO INTERCHANGE (UPDATE DATA) 345/230/13.2KV TRANSFORMER CKT 2'
13WP	0	0	'FROM->TO'	G11_058	'TUCO INTERCHANGE (GE M1022338) 345/230/13.2KV TRANSFORMER CKT 1'	560	0.461	120.36	'TUCO INTERCHANGE (UPDATE DATA) 345/230/13.2KV TRANSFORMER CKT 2'
13WP	0	0	'FROM->TO'	G11_058	'TUCO INTERCHANGE (GE M1022338) 345/230/13.2KV TRANSFORMER CKT 1'	560	0.461	120.04	'TUCO INTERCHANGE (UPDATE DATA) 345/230/13.2KV TRANSFORMER CKT 2'
12WP	0	0	'FROM->TO'	G11_058	'TUCO INTERCHANGE (UPDATE DATA) 345/230/13.2KV TRANSFORMER CKT 2'	560	0.451	118.80	'TUCO INTERCHANGE (GE M1022338) 345/230/13.2KV TRANSFORMER CKT 1'
12WP	0	0	'FROM->TO'	G11_058	'TUCO INTERCHANGE (UPDATE DATA) 345/230/13.2KV TRANSFORMER CKT 2'	560	0.451	118.70	'TUCO INTERCHANGE (GE M1022338) 345/230/13.2KV TRANSFORMER CKT 1'
13WP	0	0	'FROM->TO'	G11_058	'TUCO INTERCHANGE (UPDATE DATA) 345/230/13.2KV TRANSFORMER CKT 2'	560	0.450	117.56	'TUCO INTERCHANGE (GE M1022338) 345/230/13.2KV TRANSFORMER CKT 1'
13WP	0	0	'FROM->TO'	G11_058	'TUCO INTERCHANGE (UPDATE DATA) 345/230/13.2KV TRANSFORMER CKT 2'	560	0.450	117.39	'TUCO INTERCHANGE (GE M1022338) 345/230/13.2KV TRANSFORMER CKT 1'
12G	06G11_058	0	'FROM->TO'	G11_058	'JONES STATION - TUCO INTERCHANGE 230KV CKT 1'	351	0.39662	101.6941	'TOLK STATION EAST - TUCO INTERCHANGE 230KV CKT 1'
12WP	0	0	'FROM->TO'	G11_058	'JONES STATION - TUCO INTERCHANGE 230KV CKT 1'	361	0.390	102.83	'TOLK STATION EAST - TUCO INTERCHANGE 230KV CKT 1'
13WP	0	0	'FROM->TO'	G11_058	'JONES STATION - TUCO INTERCHANGE 230KV CKT 1'	361	0.390	105.25	'TOLK STATION EAST - TUCO INTERCHANGE 230KV CKT 1'
12G	06NR	0	'FROM->TO'	G11_058	'JONES STATION - TUCO INTERCHANGE 230KV CKT 1'	351	0.374	102.36	'SUNDOWN INTERCHANGE - WOLFFORTH INTERCHANGE 230KV CKT 1'
12G	06NR	0	'FROM->TO'	G11_058	'JONES STATION - TUCO INTERCHANGE 230KV CKT 1'	351	0.37047	131.4012	'SUNDOWN INTERCHANGE - WOLFFORTH INTERCHANGE 230KV CKT 1'
12G	06NR	0	'FROM->TO'	G11_058	'JONES STATION - TUCO INTERCHANGE 230KV CKT 1'	351	0.29179	118.2301	'PLANT X STATION - SUNDOWN INTERCHANGE 230KV CKT 1'
12G	06NR	0	'FROM->TO'	G11_058	'JONES STATION - TUCO INTERCHANGE 230KV CKT 1'	351	0.291	108.99	'LUBBOCK EAST INTERCHANGE - TUCO INTERCHANGE 115KV CKT 1'
12G	06NR	0	'FROM->TO'	G11_058	'JONES STATION - TUCO INTERCHANGE 230KV CKT 1'	351	0.290	102.39	'GRASSLAND INTERCHANGE - WOLFFORTH INTERCHANGE 230KV CKT 1'
12G	06NR	0	'FROM->TO'	G11_058	'JONES STATION - TUCO INTERCHANGE 230KV CKT 1'	351	0.2887	132.4127	'LUBBOCK EAST INTERCHANGE - TUCO INTERCHANGE 115KV CKT 1'
12G	06NR	0	'FROM->TO'	G11_058	'JONES STATION - TUCO INTERCHANGE 230KV CKT 1'	351	0.28843	124.2963	'GRASSLAND INTERCHANGE - WOLFFORTH INTERCHANGE 230KV CKT 1'
12G	06NR	0	'FROM->TO'	G11_058	'JONES STATION - TUCO INTERCHANGE 230KV CKT 1'	351	0.287	104.12	'BORDEN COUNTY INTERCHANGE (ABB LL58862) 230/138/13.2KV TRANSFORMER CKT 1'
12G	06NR	0	'FROM->TO'	G11_058	'JONES STATION - TUCO INTERCHANGE 230KV CKT 1'	351	0.287	104.12	'BORDEN COUNTY INTERCHANGE - G11_058T 230.00 230KV CKT 1'
12G	06NR	0	'FROM->TO'	G11_058	'JONES STATION - TUCO INTERCHANGE 230KV CKT 1'	351	0.28529	126.1475	'BORDEN COUNTY INTERCHANGE - G11_058T 230.00 230KV CKT 1'
12G	06NR	0	'FROM->TO'	G11_058	'JONES STATION - TUCO INTERCHANGE 230KV CKT 1'	351	0.28529	126.1518	'BORDEN COUNTY INTERCHANGE (ABB LL58862) 230/138/13.2KV TRANSFORMER CKT 1'
12G	06NR	0	'FROM->TO'	G11_058	'JONES STATION - TUCO INTERCHANGE 230KV CKT 1'	351	0.28529	118.6959	'CAPROCK REC-MCDONALD - CAPROCK REC-PHILLIPS 138KV CKT 1'
12G	06NR	0	'FROM->TO'	G11_058	'JONES STATION - TUCO INTERCHANGE 230KV CKT 1'	351	0.28529	118.0698	'CAPROCK REC-PHILLIPS - CAPROCK REC-TATE 138KV CKT 1'
12G	06NR	0	'FROM->TO'	G11_058	'JONES STATION - TUCO INTERCHANGE 230KV CKT 1'	351	0.28529	117.787	'HOBBS INTERCHANGE - MIDLAND COUNTY INTERCHANGE 230KV CKT 1'
12G	06NR	0	'FROM->TO'	G11_058	'JONES STATION - TUCO INTERCHANGE 230KV CKT 1'	351	0.28529	117.7914	'MIDLAND COUNTY INTERCHANGE (ABB LLL58861) 230/138/13.2KV TRANSFORMER CKT 1'
12G	06NR	0	'FROM->TO'	G11_058	'JONES STATION - TUCO INTERCHANGE 230KV CKT 1'	351	0.283	101.12	'LUBBOCK SOUTH INTERCHANGE - WOLFFORTH INTERCHANGE 230KV CKT 1'
12G	06NR	0	'FROM->TO'	G11_058	'JONES STATION - TUCO INTERCHANGE 230KV CKT 1'	351	0.280	106.24	'WOLFFORTH INTERCHANGE (WH 7001668) 230/115/13.2KV TRANSFORMER CKT 1'
12G	06NR	0	'FROM->TO'	G11_058	'JONES STATION - TUCO INTERCHANGE 230KV CKT 1'	351	0.27989	127.426	'LUBBOCK SOUTH INTERCHANGE - WOLFFORTH INTERCHANGE 230KV CKT 1'
12G	06NR	0	'FROM->TO'	G11_058	'JONES STATION - TUCO INTERCHANGE 230KV CKT 1'	351	0.27878	122.7637	'CARLISLE INTERCHANGE - TUCO INTERCHANGE 230KV CKT 1'
12G	06NR	0	'FROM->TO'	G11_058	'JONES STATION - TUCO INTERCHANGE 230KV CKT 1'	351	0.279	108.19	'ALLEN SUB - LUBBOCK SOUTH INTERCHANGE 115KV CKT 1'
12G	06NR	0	'FROM->TO'	G11_058	'JONES STATION - TUCO INTERCHANGE 230KV CKT 1'	351	0.279	105.63	'ALLEN SUB - SOUTH PLAINS REC-QUAKER 115KV CKT 1'
12G	06NR	0	'FROM->TO'	G11_058	'JONES STATION - TUCO INTERCHANGE 230KV CKT 1'	351	0.279	104.61	'SOUTH PLAINS REC-QUAKER - South Plains REC-Frankford Sub 115KV CKT 1'
12G	06NR	0	'FROM->TO'	G11_058	'JONES STATION - TUCO INTERCHANGE 230KV CKT 1'	351	0.279	103.70	'MURPHY SUB - South Plains REC-Frankford Sub 115KV CKT 1'
12G	06NR	0	'FROM->TO'	G11_058	'JONES STATION - TUCO INTERCHANGE 230KV CKT 1'	351	0.279	102.65	'CARLISLE INTERCHANGE - MURPHY SUB 115KV CKT 1'
12G	06NR	0	'FROM->TO'	G11_058	'JONES STATION - TUCO INTERCHANGE 230KV CKT 1'	351	0.27821	128.4789	'WOLFFORTH INTERCHANGE (WH 7001668) 230/115/13.2KV TRANSFORMER CKT 1'

SEASON	GROUP	SCENARIO	DIRECTION	SOURCE	MONITORED ELEMENT	RATE B (MVA)	TDF	(%MVA) LOADING	CONTINGENCY
12G	06NR	0	'FROM->TO'	G11_058	'JONES STATION - TUCO INTERCHANGE 230KV CKT 1'	351	0.27588	130.5194	'ALLEN SUB - LUBBOCK SOUTH INTERCHANGE 115KV CKT 1'
12G	06NR	0	'FROM->TO'	G11_058	'JONES STATION - TUCO INTERCHANGE 230KV CKT 1'	351	0.27588	127.9671	'ALLEN SUB - SOUTH PLAINS REC-QUAKER 115KV CKT 1'
12G	06NR	0	'FROM->TO'	G11_058	'JONES STATION - TUCO INTERCHANGE 230KV CKT 1'	351	0.27588	124.9653	'CARLISLE INTERCHANGE - MURPHY SUB 115KV CKT 1'
12G	06NR	0	'FROM->TO'	G11_058	'JONES STATION - TUCO INTERCHANGE 230KV CKT 1'	351	0.27588	126.0111	'MURPHY SUB - South Plains REC-Frankford Sub 115KV CKT 1'
12G	06NR	0	'FROM->TO'	G11_058	'JONES STATION - TUCO INTERCHANGE 230KV CKT 1'	351	0.27588	126.9232	'SOUTH PLAINS REC-QUAKER - South Plains REC-Frankford Sub 115KV CKT 1'
12G	06NR	0	'FROM->TO'	G11_058	'JONES STATION - TUCO INTERCHANGE 230KV CKT 1'	351	0.275	109.76	'Jones Station Bus#2 - LUBBOCK EAST INTERCHANGE 230KV CKT 1'
12G	06NR	0	'FROM->TO'	G11_058	'JONES STATION - TUCO INTERCHANGE 230KV CKT 1'	351	0.275	107.01	'LUBBOCK EAST INTERCHANGE (ENRCO 136162) 230/115/13.2KV TRANSFORMER CKT 1'
12G	06NR	0	'FROM->TO'	G11_058	'JONES STATION - TUCO INTERCHANGE 230KV CKT 1'	351	0.274	100.69	'AMOCO SWITCHING STATION - SUNDOWN INTERCHANGE 230KV CKT 1'
12G	06NR	0	'FROM->TO'	G11_058	'JONES STATION - TUCO INTERCHANGE 230KV CKT 1'	351	0.27392	132.8179	'Jones Station Bus#2 - LUBBOCK EAST INTERCHANGE 230KV CKT 1'
12G	06NR	0	'FROM->TO'	G11_058	'JONES STATION - TUCO INTERCHANGE 230KV CKT 1'	351	0.27358	129.9134	'LUBBOCK EAST INTERCHANGE (ENRCO 136162) 230/115/13.2KV TRANSFORMER CKT 1'
12G	06NR	0	'FROM->TO'	G11_058	'JONES STATION - TUCO INTERCHANGE 230KV CKT 1'	351	0.273	102.07	'CARLISLE INTERCHANGE (WH XHS70711) 230/115/13.2KV TRANSFORMER CKT 1'
12G	06NR	0	'FROM->TO'	G11_058	'JONES STATION - TUCO INTERCHANGE 230KV CKT 1'	351	0.273	100.73	'CAPROCK REC-KOCH - CAPROCK REC-VEALMOOR 138KV CKT 1'
12G	06NR	0	'FROM->TO'	G11_058	'JONES STATION - TUCO INTERCHANGE 230KV CKT 1'	351	0.273	100.70	'CAPROCK REC-KOCH - CAPROCK REC-REED 138KV CKT 1'
12G	06NR	0	'FROM->TO'	G11_058	'JONES STATION - TUCO INTERCHANGE 230KV CKT 1'	351	0.27212	122.4623	'AMOCO SWITCHING STATION - SUNDOWN INTERCHANGE 230KV CKT 1'
12G	06NR	0	'FROM->TO'	G11_058	'JONES STATION - TUCO INTERCHANGE 230KV CKT 1'	351	0.27212	118.6525	'AMOCO SWITCHING STATION - YOAKUM COUNTY INTERCHANGE 230KV CKT 1'
12G	06NR	0	'FROM->TO'	G11_058	'JONES STATION - TUCO INTERCHANGE 230KV CKT 1'	351	0.27112	122.2198	'CAPROCK REC-GRADY - CAPROCK REC-REED 138KV CKT 1'
12G	06NR	0	'FROM->TO'	G11_058	'JONES STATION - TUCO INTERCHANGE 230KV CKT 1'	351	0.27112	122.3371	'CAPROCK REC-KOCH - CAPROCK REC-REED 138KV CKT 1'
12G	06NR	0	'FROM->TO'	G11_058	'JONES STATION - TUCO INTERCHANGE 230KV CKT 1'	351	0.27112	122.3743	'CAPROCK REC-KOCH - CAPROCK REC-VEALMOOR 138KV CKT 1'
12G	06NR	0	'FROM->TO'	G11_058	'JONES STATION - TUCO INTERCHANGE 230KV CKT 1'	351	0.27082	123.9029	'CARLISLE INTERCHANGE (WH XHS70711) 230/115/13.2KV TRANSFORMER CKT 1'
12G	06NR	0	'FROM->TO'	G11_058	'JONES STATION - TUCO INTERCHANGE 230KV CKT 1'	351	0.270	105.29	'FLOYD COUNTY INTERCHANGE - G11_025T 115.00 115KV CKT 1'
12G	06NR	0	'FROM->TO'	G11_058	'JONES STATION - TUCO INTERCHANGE 230KV CKT 1'	351	0.269	103.87	'LUBBOCK POWER & LIGHT-MILWAUKEE (M-E C0681251) 230/69/13.5KV TRANSFORMER CKT 1'
12G	06NR	0	'FROM->TO'	G11_058	'JONES STATION - TUCO INTERCHANGE 230KV CKT 1'	351	0.269	103.86	'LUBBOCK POWER & LIGHT-MILWAUKEE - LUBBOCK POWER & LIGHT-VICKSBURG 69KV CKT 1'
12G	06NR	0	'FROM->TO'	G11_058	'JONES STATION - TUCO INTERCHANGE 230KV CKT 1'	351	0.269	101.77	'SPP-SWPS-V33'
12G	06NR	0	'FROM->TO'	G11_058	'JONES STATION - TUCO INTERCHANGE 230KV CKT 1'	351	0.269	101.31	'GRASSLAND INTERCHANGE - LYNN COUNTY INTERCHANGE 115KV CKT 1'
12G	06NR	0	'FROM->TO'	G11_058	'JONES STATION - TUCO INTERCHANGE 230KV CKT 1'	351	0.269	100.78	'LYNN COUNTY INTERCHANGE - SOUTH PLAINS REC-WOODROW INTERCHANGE 115KV CKT 1'
12G	06NR	0	'FROM->TO'	G11_058	'JONES STATION - TUCO INTERCHANGE 230KV CKT 1'	351	0.267	102.65	'CARLISLE INTERCHANGE - SOUTH PLAINS REC-ERSKINE 115KV CKT 1'
12G	06NR	0	'FROM->TO'	G11_058	'JONES STATION - TUCO INTERCHANGE 230KV CKT 1'	351	0.267	102.42	'SPP-SWPS-V62'
12G	06NR	0	'FROM->TO'	G11_058	'JONES STATION - TUCO INTERCHANGE 230KV CKT 1'	351	0.267	102.07	'INDIANA SUB - SOUTH PLAINS REC-ERSKINE 115KV CKT 1'
12G	06NR	0	'FROM->TO'	G11_058	'JONES STATION - TUCO INTERCHANGE 230KV CKT 1'	351	0.267	100.66	'INDIANA SUB - STANTON SUB 115KV CKT 1'
12G	06NR	0	'FROM->TO'	G11_058	'JONES STATION - TUCO INTERCHANGE 230KV CKT 1'	351	0.26735	122.2039	'CROSBY COUNTY INTERCHANGE - LUBBOCK EAST INTERCHANGE 115KV CKT 1'
12G	06NR	0	'FROM->TO'	G11_058	'JONES STATION - TUCO INTERCHANGE 230KV CKT 1'	351	0.26735	127.1018	'FLOYD COUNTY INTERCHANGE - G11_025T 115.00 115KV CKT 1'
12G	06NR	0	'FROM->TO'	G11_058	'JONES STATION - TUCO INTERCHANGE 230KV CKT 1'	351	0.26682	118.7505	'CARLISLE INTERCHANGE - LUBBOCK POWER & LIGHT-MILWAUKEE 230KV CKT 1'
12G	06NR	0	'FROM->TO'	G11_058	'JONES STATION - TUCO INTERCHANGE 230KV CKT 1'	351	0.26682	125.8271	'LUBBOCK POWER & LIGHT-MILWAUKEE - LUBBOCK POWER & LIGHT-VICKSBURG 69KV CKT 1'
12G	06NR	0	'FROM->TO'	G11_058	'JONES STATION - TUCO INTERCHANGE 230KV CKT 1'	351	0.26682	125.8313	'LUBBOCK POWER & LIGHT-MILWAUKEE (M-E C0681251) 230/69/13.5KV TRANSFORMER CKT 1'
12G	06NR	0	'FROM->TO'	G11_058	'JONES STATION - TUCO INTERCHANGE 230KV CKT 1'	351	0.267	106.66	'LUBBOCK SOUTH INTERCHANGE (ABB LLM60043) 230/115/13.2KV TRANSFORMER CKT 1'
12G	06NR	0	'FROM->TO'	G11_058	'JONES STATION - TUCO INTERCHANGE 230KV CKT 1'	351	0.26593	129.3761	'LUBBOCK SOUTH INTERCHANGE (ABB LLM60043) 230/115/13.2KV TRANSFORMER CKT 1'
12G	06NR	0	'FROM->TO'	G11_058	'JONES STATION - TUCO INTERCHANGE 230KV CKT 1'	351	0.266	100.97	'Jones Station Bus#2 - LUBBOCK SOUTH INTERCHANGE 230KV CKT 2'
12G	06NR	0	'FROM->TO'	G11_058	'JONES STATION - TUCO INTERCHANGE 230KV CKT 1'	351	0.26584	122.4987	'GRASSLAND INTERCHANGE - LYNN COUNTY INTERCHANGE 115KV CKT 1'
12G	06NR	0	'FROM->TO'	G11_058	'JONES STATION - TUCO INTERCHANGE 230KV CKT 1'	351	0.26584	122.1098	'GRASSLAND INTERCHANGE (PENN 0105951) 230/115/13.2KV TRANSFORMER CKT 1'
12G	06NR	0	'FROM->TO'	G11_058	'JONES STATION - TUCO INTERCHANGE 230KV CKT 1'	351	0.26584	121.9713	'LYNN COUNTY INTERCHANGE - SOUTH PLAINS REC-WOODROW INTERCHANGE 115KV CKT 1'
12G	06NR	0	'FROM->TO'	G11_058	'JONES STATION - TUCO INTERCHANGE 230KV CKT 1'	351	0.26584	122.9249	'SPP-SWPS-V33'
12G	06NR	0	'FROM->TO'	G11_058	'JONES STATION - TUCO INTERCHANGE 230KV CKT 1'	351	0.266	101.25	'SUNDOWN INTERCHANGE (WH XDS70381) 230/115/13.8KV TRANSFORMER CKT 1'
12G	06NR	0	'FROM->TO'	G11_058	'JONES STATION - TUCO INTERCHANGE 230KV CKT 1'	351	0.265	100.62	'DEAF SMITH COUNTY INTERCHANGE - S-RANDLCO 230.00 230KV CKT 1'
12G	06NR	0	'FROM->TO'	G11_058	'JONES STATION - TUCO INTERCHANGE 230KV CKT 1'	351	0.26523	124.2487	'CARLISLE INTERCHANGE - SOUTH PLAINS REC-ERSKINE 115KV CKT 1'
12G	06NR	0	'FROM->TO'	G11_058	'JONES STATION - TUCO INTERCHANGE 230KV CKT 1'	351	0.26523	123.7014	'INDIANA SUB - SOUTH PLAINS REC-ERSKINE 115KV CKT 1'
12G	06NR	0	'FROM->TO'	G11_058	'JONES STATION - TUCO INTERCHANGE 230KV CKT 1'	351	0.26523	122.2929	'INDIANA SUB - STANTON SUB 115KV CKT 1'
12G	06NR	0	'FROM->TO'	G11_058	'JONES STATION - TUCO INTERCHANGE 230KV CKT 1'	351	0.26523	121.9828	'SPP-SWPS-V15'
12G	06NR	0	'FROM->TO'	G11_058	'JONES STATION - TUCO INTERCHANGE 230KV CKT 1'	351	0.26523	124.0324	'SPP-SWPS-V62'
12G	06NR	0	'FROM->TO'	G11_058	'JONES STATION - TUCO INTERCHANGE 230KV CKT 1'	351	0.265	103.20	'DEAF SMITH COUNTY INTERCHANGE - PLANT X STATION 230KV CKT 1'
12G	06NR	0	'FROM->TO'	G11_058	'JONES STATION - TUCO INTERCHANGE 230KV CKT 1'	351	0.265	100.65	'HALE CO INTERCHANGE - KRESS INTERCHANGE 115KV CKT 1'
12G	06NR	0	'FROM->TO'	G11_058	'JONES STATION - TUCO INTERCHANGE 230KV CKT 1'	351	0.265	102.06	'PLANT X STATION - S-RANDLCO 230.00 230KV CKT 1'
12G	06NR	0	'FROM->TO'	G11_058	'JONES STATION - TUCO INTERCHANGE 230KV CKT 1'	351	0.264	102.50	'POTTER COUNTY INTERCHANGE - S-RANDLCO 230.00 230KV CKT 1'
12G	06NR	0	'FROM->TO'	G11_058	'JONES STATION - TUCO INTERCHANGE 230KV CKT 1'	351	0.264	101.33	'JONES STATION - LUBBOCK SOUTH INTERCHANGE 230KV CKT 1'
12G	06NR	0	'FROM->TO'	G11_058	'JONES STATION - TUCO INTERCHANGE 230KV CKT 1'	351	0.264	101.87	'BUSHLAND INTERCHANGE - S-RANDLCO 230.00 230KV CKT 1'
12G	06NR	0	'FROM->TO'	G11_058	'JONES STATION - TUCO INTERCHANGE 230KV CKT 1'	351	0.264	101.63	'Jones Station Bus#2 - LUBBOCK POWER & LIGHT-HOLLY PLANT 230KV CKT 1'
12G	06NR	0	'FROM->TO'	G11_058	'JONES STATION - TUCO INTERCHANGE 230KV CKT 1'	351	0.26383	122.9279	'Jones Station Bus#2 - LUBBOCK SOUTH INTERCHANGE 230KV CKT 2'
12G	06NR	0	'FROM->TO'	G11_058	'JONES STATION - TUCO INTERCHANGE 230KV CKT 1'	351	0.26375	119.8914	'HOCKLEY COUNTY INTERCHANGE - LAMB COUNTY INTERCHANGE 115KV CKT 1'
12G	06NR	0	'FROM->TO'	G11_058	'JONES STATION - TUCO INTERCHANGE 230KV CKT 1'	351	0.26375	122.0167	'Lamb County REC-Opdyke Sub - SUNDOWN INTERCHANGE 115KV CKT 1'
12G	06NR	0	'FROM->TO'	G11_058	'JONES STATION - TUCO INTERCHANGE 230KV CKT 1'	351	0.26375	122.0264	'SPP-SWPS-T31'
12G	06NR	0	'FROM->TO'	G11_058	'JONES STATION - TUCO INTERCHANGE 230KV CKT 1'	351	0.26372	122.7229	'SUNDOWN INTERCHANGE (WH XDS70381) 230/115/13.8KV TRANSFORMER CKT 1'
12G	06NR	0	'FROM->TO'	G11_058	'JONES STATION - TUCO INTERCHANGE 230KV CKT 1'	351	0.264	101.05	'BUSHLAND INTERCHANGE - POTTER COUNTY INTERCHANGE 230KV CKT 1'
12G	06NR	0	'FROM->TO'	G11_058	'JONES STATION - TUCO INTERCHANGE 230KV CKT 1'	351	0.26353	120.1611	'CAPROCK REC-1956 - CAPROCK REC-MCDONALD 138KV CKT 1'
12G	06NR	0	'FROM->TO'	G11_058	'JONES STATION - TUCO INTERCHANGE 230KV CKT 1'	351	0.263	101.19	'LUBBOCK POWER & LIGHT-SOUTHEAST - LUBBOCK SOUTH INTERCHANGE 230KV CKT 1'
12G	06NR	0	'FROM->TO'	G11_058	'JONES STATION - TUCO INTERCHANGE 230KV CKT 1'	351	0.263	100.86	'LUBBOCK EAST INTERCHANGE - LUBBOCK POWER & LIGHT-WADSWORTH 230KV CKT 1'
12G	06NR	0	'FROM->TO'	G11_058	'JONES STATION - TUCO INTERCHANGE 230KV CKT 1'	351	0.263	100.93	'HOBBS INTERCHANGE - LEA COUNTY INTERCHANGE 230KV CKT 1'
12G	06NR	0	'FROM->TO'	G11_058	'JONES STATION - TUCO INTERCHANGE 230KV CKT 1'	351	0.2633	124.2535	'DEAF SMITH COUNTY INTERCHANGE - PLANT X STATION 230KV CKT 1'
12G	06NR	0	'FROM->TO'	G11_058	'JONES STATION - TUCO INTERCHANGE 230KV CKT 1'	351	0.263	106.68	'WOLFFORTH INTERCHANGE - YUMA INTERCHANGE 115KV CKT 1'
12G	06NR	0	'FROM->TO'	G11_058	'JONES STATION - TUCO INTERCHANGE 230KV CKT 1'	351	0.263	105.30	'LP-DOUD_TP 3115.00 - YUMA INTERCHANGE 115KV CKT 1'
12G	06NR	0	'FROM->TO'	G11_058	'JONES STATION - TUCO INTERCHANGE 230KV CKT 1'	351	0.263	104.10	'CARLISLE INTERCHANGE - LP-DOUD_TP 3115.00 115KV CKT 1'
12G	06NR	0	'FROM->TO'	G11_058	'JONES STATION - TUCO INTERCHANGE 230KV CKT 1'	351	0.263	100.62	'SPP-SWPS-T89'
12G	06NR	0	'FROM->TO'	G11_058	'JONES STATION - TUCO INTERCHANGE 230KV CKT 1'	351	0.26294	122.029	'HALE CO INTERCHANGE - KRESS INTERCHANGE 115KV CKT 1'
12G	06NR	0	'FROM->TO'	G11_058	'JONES STATION - TUCO INTERCHANGE 230KV CKT 1'	351	0.263	101.33	'SPP-SWPS-V49'
12G	06NR	0	'FROM->TO'	G11_058	'JONES STATION - TUCO INTERCHANGE 230KV CKT 1'	351	0.26284	123.1862	'PLANT X STATION - S-RANDLCO 230.00 230KV CKT 1'
12G	06NR	0	'FROM->TO'	G11_058	'JONES STATION - TUCO INTERCHANGE 230KV CKT 1'	351	0.263	100.67	'SPP-SWPS-T14'
12G	06NR	0	'FROM->TO'	G11_058	'JONES STATION - TUCO INTERCHANGE 230KV CKT 1'	351	0.263	109.73	'BASE CASE'
12G	06NR	0	'FROM->TO'	G11_058	'JONES STATION - TUCO INTERCHANGE 230KV CKT 1'	351	0.263	102.54	'GEN336821 1-GRAND GULF UNIT'
12G	06NR	0	'FROM->TO'	G11_058	'JONES STATION - TUCO INTERCHANGE 230KV CKT 1'	351	0.263	102.30	'GEN336153 1-WATERFORD UNIT#3'
12G	06NR	0	'FROM->TO'	G11_058	'JONES STATION - TUCO INTERCHANGE 230KV CKT 1'	351	0.263	101.98	'GEN337911 1-ARKANSAS NUCLEAR ONE UNIT #2'

SEASON	GROUP	SCENARIO	DIRECTION	SOURCE	MONITORED ELEMENT	RATE B (MVA)	TDF	(%MVA) LOADING	CONTINGENCY
12G	06NR	0	'FROM->TO'	G11_058	'JONES STATION - TUCO INTERCHANGE 230KV CKT 1'	351	0.263	101.97	'GEN335831 1-RIVERBEND UNIT#1'
12G	06NR	0	'FROM->TO'	G11_058	'JONES STATION - TUCO INTERCHANGE 230KV CKT 1'	351	0.263	101.57	'GEN337910 1-ARKANSAS NUCLEAR ONE UNIT #1'
12G	06NR	0	'FROM->TO'	G11_058	'JONES STATION - TUCO INTERCHANGE 230KV CKT 1'	351	0.263	101.44	'GEN338146 1-INDEPENDENCE UNIT #2'
12G	06NR	0	'FROM->TO'	G11_058	'JONES STATION - TUCO INTERCHANGE 230KV CKT 1'	351	0.263	101.43	'GEN338143 1-INDEPENDENCE UNIT #1'
12G	06NR	0	'FROM->TO'	G11_058	'JONES STATION - TUCO INTERCHANGE 230KV CKT 1'	351	0.263	101.41	'GEN337652 1-WHITE BLUFF UNIT #1'
12G	06NR	0	'FROM->TO'	G11_058	'JONES STATION - TUCO INTERCHANGE 230KV CKT 1'	351	0.263	101.29	'GEN337653 1-WHITE BLUFF UNIT #2'
12G	06NR	0	'FROM->TO'	G11_058	'JONES STATION - TUCO INTERCHANGE 230KV CKT 1'	351	0.263	101.13	'GEN501801 1-DOLET HILLS UNIT1'
12G	06NR	0	'FROM->TO'	G11_058	'JONES STATION - TUCO INTERCHANGE 230KV CKT 1'	351	0.263	101.12	'GEN337041 1-GERALD ANDRUS'
12G	06NR	0	'FROM->TO'	G11_058	'JONES STATION - TUCO INTERCHANGE 230KV CKT 1'	351	0.263	101.12	'GEN336251 1-NINEMILE POINT UNIT#4'
12G	06NR	0	'FROM->TO'	G11_058	'JONES STATION - TUCO INTERCHANGE 230KV CKT 1'	351	0.263	101.03	'GEN338388 1-1PLUMPT 23.000'
12G	06NR	0	'FROM->TO'	G11_058	'JONES STATION - TUCO INTERCHANGE 230KV CKT 1'	351	0.263	100.99	'GEN501813 1-RODEMACHER UNIT 3'
12G	06NR	0	'FROM->TO'	G11_058	'JONES STATION - TUCO INTERCHANGE 230KV CKT 1'	351	0.263	100.94	'GEN336831 1-BAXTER WILSON SES'
12G	06NR	0	'FROM->TO'	G11_058	'JONES STATION - TUCO INTERCHANGE 230KV CKT 1'	351	0.263	100.91	'GEN509403 1-PIRKEY GENERATION'
12G	06NR	0	'FROM->TO'	G11_058	'JONES STATION - TUCO INTERCHANGE 230KV CKT 1'	351	0.263	100.86	'SPP-SWPS-V55'
12G	06NR	0	'FROM->TO'	G11_058	'JONES STATION - TUCO INTERCHANGE 230KV CKT 1'	351	0.263	100.84	'GEN501812 1-RODEMACHER UNIT 2'
12G	06NR	0	'FROM->TO'	G11_058	'JONES STATION - TUCO INTERCHANGE 230KV CKT 1'	351	0.263	100.83	'GEN335206 1-NELSON UNIT 6'
12G	06NR	0	'FROM->TO'	G11_058	'JONES STATION - TUCO INTERCHANGE 230KV CKT 1'	351	0.263	100.77	'GEN335204 1-NELSON UNIT 4'
12G	06NR	0	'FROM->TO'	G11_058	'JONES STATION - TUCO INTERCHANGE 230KV CKT 1'	351	0.263	100.75	'GEN334440 1-SABINE UNIT 4'
12G	06NR	0	'FROM->TO'	G11_058	'JONES STATION - TUCO INTERCHANGE 230KV CKT 1'	351	0.263	100.67	'GEN336801 1-BAXTER WILSON UNIT #1'
12G	06NR	0	'FROM->TO'	G11_058	'JONES STATION - TUCO INTERCHANGE 230KV CKT 1'	351	0.263	100.66	'GEN509405 1-WELSH #2'
12G	06NR	0	'FROM->TO'	G11_058	'JONES STATION - TUCO INTERCHANGE 230KV CKT 1'	351	0.263	100.66	'GEN509406 1-WELSH #3'
12G	06NR	0	'FROM->TO'	G11_058	'JONES STATION - TUCO INTERCHANGE 230KV CKT 1'	351	0.263	100.66	'GEN509404 1-WELSH #1'
12G	06NR	0	'FROM->TO'	G11_058	'JONES STATION - TUCO INTERCHANGE 230KV CKT 1'	351	0.263	100.61	'GEN334441 1-SABINE UNIT 5'
12G	06NR	0	'FROM->TO'	G11_058	'JONES STATION - TUCO INTERCHANGE 230KV CKT 1'	351	0.263	100.59	'GEN509394 1-FLINT CREEK'
12G	06NR	0	'FROM->TO'	G11_058	'JONES STATION - TUCO INTERCHANGE 230KV CKT 1'	351	0.26275	123.6709	'POTTER COUNTY INTERCHANGE - S-RANDLCO 230.00 230KV CKT 1'
12G	06NR	0	'FROM->TO'	G11_058	'JONES STATION - TUCO INTERCHANGE 230KV CKT 1'	351	0.263	101.01	'DBL-MATT-TAT'
12G	06NR	0	'FROM->TO'	G11_058	'JONES STATION - TUCO INTERCHANGE 230KV CKT 1'	351	0.263	100.65	'G11_051T 345.00 - TATONGA7 345.00 345KV CKT 1'
12G	06NR	0	'FROM->TO'	G11_058	'JONES STATION - TUCO INTERCHANGE 230KV CKT 1'	351	0.263	100.63	'G11_051T 345.00 - WOODWARD DISTRICT EHV 345KV CKT 1'
12G	06NR	0	'FROM->TO'	G11_058	'JONES STATION - TUCO INTERCHANGE 230KV CKT 1'	351	0.263	101.75	'OASIS INTERCHANGE - SAN JUAN MESA TAP 230KV CKT 1'
12G	06NR	0	'FROM->TO'	G11_058	'JONES STATION - TUCO INTERCHANGE 230KV CKT 1'	351	0.263	100.79	'Hitchland Interchange - WOODWARD DISTRICT EHV 345KV CKT 2'
12G	06NR	0	'FROM->TO'	G11_058	'JONES STATION - TUCO INTERCHANGE 230KV CKT 1'	351	0.262	100.82	'MOORE COUNTY INTERCHANGE - POTTER COUNTY INTERCHANGE 230KV CKT 1'
12G	06NR	0	'FROM->TO'	G11_058	'JONES STATION - TUCO INTERCHANGE 230KV CKT 1'	351	0.262	101.84	'CHAVESCO 345.00 - TOLK STATION 345KV CKT 1'
12G	06NR	0	'FROM->TO'	G11_058	'JONES STATION - TUCO INTERCHANGE 230KV CKT 1'	351	0.262	101.83	'TOLK STATION (ABBXNL844501) 345/230/13.2KV TRANSFORMER CKT 1'
12G	06NR	0	'FROM->TO'	G11_058	'JONES STATION - TUCO INTERCHANGE 230KV CKT 1'	351	0.26231	123.0755	'BUSHLAND INTERCHANGE - S-RANDLCO 230.00 230KV CKT 1'
12G	06NR	0	'FROM->TO'	G11_058	'JONES STATION - TUCO INTERCHANGE 230KV CKT 1'	351	0.26231	123.2713	'JONES STATION - LUBBOCK SOUTH INTERCHANGE 230KV CKT 1'
12G	06NR	0	'FROM->TO'	G11_058	'JONES STATION - TUCO INTERCHANGE 230KV CKT 1'	351	0.262	101.59	'GRAPEVINE INTERCHANGE - NICHOLS STATION 230KV CKT 1'
12G	06NR	0	'FROM->TO'	G11_058	'JONES STATION - TUCO INTERCHANGE 230KV CKT 1'	351	0.262	102.80	'DBL-WWRD-BVR'
12G	06NR	0	'FROM->TO'	G11_058	'JONES STATION - TUCO INTERCHANGE 230KV CKT 1'	351	0.262	100.68	'G11_012T 230.00 - HITCHLAND INTERCHANGE 230KV CKT 1'
12G	06NR	0	'FROM->TO'	G11_058	'JONES STATION - TUCO INTERCHANGE 230KV CKT 1'	351	0.262	101.40	'PLANT X STATION (WH ALM20171) 230/115/13.2KV TRANSFORMER CKT 1'
12G	06NR	0	'FROM->TO'	G11_058	'JONES STATION - TUCO INTERCHANGE 230KV CKT 1'	351	0.262	102.53	'ELK CITY 230KV - SWEETWATER 230KV CKT 1'
12G	06NR	0	'FROM->TO'	G11_058	'JONES STATION - TUCO INTERCHANGE 230KV CKT 1'	351	0.262	102.53	'ELK CITY 230KV (ELKCTY-6) 230/138/13.8KV TRANSFORMER CKT 1'
12G	06NR	0	'FROM->TO'	G11_058	'JONES STATION - TUCO INTERCHANGE 230KV CKT 1'	351	0.262	101.83	'GRAPEVINE INTERCHANGE - STATELINE INTERCHANGE 230KV CKT 1'
12G	06NR	0	'FROM->TO'	G11_058	'JONES STATION - TUCO INTERCHANGE 230KV CKT 1'	351	0.262	101.48	'SPP-SWPS-02A'
12G	06NR	0	'FROM->TO'	G11_058	'JONES STATION - TUCO INTERCHANGE 230KV CKT 1'	351	0.262	101.48	'SPP-SWPS-02'
12G	06NR	0	'FROM->TO'	G11_058	'JONES STATION - TUCO INTERCHANGE 230KV CKT 1'	351	0.262	101.48	'STATELINE INTERCHANGE - STLN-DEMARC6 230KV CKT 1'
12G	06NR	0	'FROM->TO'	G11_058	'JONES STATION - TUCO INTERCHANGE 230KV CKT 1'	351	0.262	101.47	'STLN-DEMARC6 - SWEETWATER 230KV CKT 1'
12G	06NR	0	'FROM->TO'	G11_058	'JONES STATION - TUCO INTERCHANGE 230KV CKT 1'	351	0.262	102.13	'SPP-SWPS-03'
12G	06NR	0	'FROM->TO'	G11_058	'JONES STATION - TUCO INTERCHANGE 230KV CKT 1'	351	0.262	102.92	'DBL-HTCH-BVR'
12G	06NR	0	'FROM->TO'	G11_058	'JONES STATION - TUCO INTERCHANGE 230KV CKT 1'	351	0.2618	123.043	'Jones Station Bus#2 - LUBBOCK POWER & LIGHT-HOLLY PLANT 230KV CKT 1'
12G	06NR	0	'FROM->TO'	G11_058	'JONES STATION - TUCO INTERCHANGE 230KV CKT 1'	351	0.26169	122.3167	'BUSHLAND INTERCHANGE - POTTER COUNTY INTERCHANGE 230KV CKT 1'
12G	06NR	0	'FROM->TO'	G11_058	'JONES STATION - TUCO INTERCHANGE 230KV CKT 1'	351	0.26157	119.9359	'LAMB COUNTY INTERCHANGE - TOLK STATION WEST 230KV CKT 1'
12G	06NR	0	'FROM->TO'	G11_058	'JONES STATION - TUCO INTERCHANGE 230KV CKT 1'	351	0.26157	119.9093	'LAMB COUNTY INTERCHANGE (WH ALM20172) 230/115/13.2KV TRANSFORMER CKT 1'
12G	06NR	0	'FROM->TO'	G11_058	'JONES STATION - TUCO INTERCHANGE 230KV CKT 1'	351	0.26141	125.2739	'CARLISLE INTERCHANGE - LP-DOUD_TP 3115.00 115KV CKT 1'
12G	06NR	0	'FROM->TO'	G11_058	'JONES STATION - TUCO INTERCHANGE 230KV CKT 1'	351	0.26141	126.4968	'LP-DOUD_TP 3115.00 - YUMA INTERCHANGE 115KV CKT 1'
12G	06NR	0	'FROM->TO'	G11_058	'JONES STATION - TUCO INTERCHANGE 230KV CKT 1'	351	0.26141	127.8806	'WOLFFORTH INTERCHANGE - YUMA INTERCHANGE 115KV CKT 1'
12G	06NR	0	'FROM->TO'	G11_058	'JONES STATION - TUCO INTERCHANGE 230KV CKT 1'	351	0.26137	122.5309	'LUBBOCK POWER & LIGHT-SOUTHEAST - LUBBOCK SOUTH INTERCHANGE 230KV CKT 1'
12G	06NR	0	'FROM->TO'	G11_058	'JONES STATION - TUCO INTERCHANGE 230KV CKT 1'	351	0.26133	122.2316	'LUBBOCK EAST INTERCHANGE - LUBBOCK POWER & LIGHT-WADSWORTH 230KV CKT 1'
12G	06NR	0	'FROM->TO'	G11_058	'JONES STATION - TUCO INTERCHANGE 230KV CKT 1'	351	0.26109	122.3839	'HOBBS INTERCHANGE - LEA COUNTY INTERCHANGE 230KV CKT 1'
12G	06NR	0	'FROM->TO'	G11_058	'JONES STATION - TUCO INTERCHANGE 230KV CKT 1'	351	0.26091	121.9726	'SPP-SWPS-T89'
12G	06NR	0	'FROM->TO'	G11_058	'JONES STATION - TUCO INTERCHANGE 230KV CKT 1'	351	0.26077	122.6654	'SPP-SWPS-V49'
12G	06NR	0	'FROM->TO'	G11_058	'JONES STATION - TUCO INTERCHANGE 230KV CKT 1'	351	0.26073	122.0006	'SPP-SWPS-T14'
12G	06NR	0	'FROM->TO'	G11_058	'JONES STATION - TUCO INTERCHANGE 230KV CKT 1'	351	0.26072	133.2278	'BASE CASE'
12G	06NR	0	'FROM->TO'	G11_058	'JONES STATION - TUCO INTERCHANGE 230KV CKT 1'	351	0.26072	122.2214	'GEN334440 1-SABINE UNIT 4'
12G	06NR	0	'FROM->TO'	G11_058	'JONES STATION - TUCO INTERCHANGE 230KV CKT 1'	351	0.26072	122.0669	'GEN334441 1-SABINE UNIT 5'
12G	06NR	0	'FROM->TO'	G11_058	'JONES STATION - TUCO INTERCHANGE 230KV CKT 1'	351	0.26072	122.2481	'GEN335204 1-NELSON UNIT 4'
12G	06NR	0	'FROM->TO'	G11_058	'JONES STATION - TUCO INTERCHANGE 230KV CKT 1'	351	0.26072	122.3133	'GEN335206 1-NELSON UNIT 6'
12G	06NR	0	'FROM->TO'	G11_058	'JONES STATION - TUCO INTERCHANGE 230KV CKT 1'	351	0.26072	123.5382	'GEN335831 1-RIVERBEND UNIT#1'
12G	06NR	0	'FROM->TO'	G11_058	'JONES STATION - TUCO INTERCHANGE 230KV CKT 1'	351	0.26072	123.8992	'GEN336153 1-WATERFORD UNIT#3'
12G	06NR	0	'FROM->TO'	G11_058	'JONES STATION - TUCO INTERCHANGE 230KV CKT 1'	351	0.26072	122.6279	'GEN336251 1-NINEMILE POINT UNIT#4'
12G	06NR	0	'FROM->TO'	G11_058	'JONES STATION - TUCO INTERCHANGE 230KV CKT 1'	351	0.26072	122.1372	'GEN336801 1-BAXTER WILSON UNIT #1'
12G	06NR	0	'FROM->TO'	G11_058	'JONES STATION - TUCO INTERCHANGE 230KV CKT 1'	351	0.26072	124.1731	'GEN336821 1-GRAND GULF UNIT'
12G	06NR	0	'FROM->TO'	G11_058	'JONES STATION - TUCO INTERCHANGE 230KV CKT 1'	351	0.26072	120.9344	'TUCO INTERCHANGE 230/13.0KV TRANSFORMER CKT 1'
12G	06NR	0	'FROM->TO'	G11_058	'JONES STATION - TUCO INTERCHANGE 230KV CKT 1'	351	0.26071	122.1743	'SPP-SWPS-V55'
12G	06NR	0	'FROM->TO'	G11_058	'JONES STATION - TUCO INTERCHANGE 230KV CKT 1'	351	0.26065	122.0019	'G11_051T 345.00 - TATONGA7 345.00 345KV CKT 1'
12G	06NR	0	'FROM->TO'	G11_058	'JONES STATION - TUCO INTERCHANGE 230KV CKT 1'	351	0.26065	121.9694	'G11_051T 345.00 - WOODWARD DISTRICT EHV 345KV CKT 1'
12G	06NR	0	'FROM->TO'	G11_058	'JONES STATION - TUCO INTERCHANGE 230KV CKT 1'	351	0.2606	120.2141	'LAWTON EASTSIDE - SUNNYSIDE 345KV CKT 1'
12G	06NR	0	'FROM->TO'	G11_058	'JONES STATION - TUCO INTERCHANGE 230KV CKT 1'	351	0.26044	122.1544	'Hitchland Interchange - WOODWARD DISTRICT EHV 345KV CKT 2'
12G	06NR	0	'FROM->TO'	G11_058	'JONES STATION - TUCO INTERCHANGE 230KV CKT 1'	351	0.2604	119.611	'CHAVES COUNTY INTERCHANGE - SAN JUAN MESA TAP 230KV CKT 1'

SEASON	GROUP	SCENARIO	DIRECTION	SOURCE	MONITORED ELEMENT	RATE B (MVA)	TDF	(%MVA) LOADING	CONTINGENCY
12G	06NR	0	'FROM->TO'	G11_058	'JONES STATION - TUCO INTERCHANGE 230KV CKT 1'	351	0.2604	123.2333	'OASIS INTERCHANGE - SAN JUAN MESA TAP 230KV CKT 1'
12G	06NR	0	'FROM->TO'	G11_058	'JONES STATION - TUCO INTERCHANGE 230KV CKT 1'	351	0.260	105.68	'G05-17T 345.00 - Hitchland Interchange 345KV CKT 1'
12G	06NR	0	'FROM->TO'	G11_058	'JONES STATION - TUCO INTERCHANGE 230KV CKT 1'	351	0.260	104.43	'G05-17T 345.00 - POTTER COUNTY INTERCHANGE 345KV CKT 1'
12G	06NR	0	'FROM->TO'	G11_058	'JONES STATION - TUCO INTERCHANGE 230KV CKT 1'	351	0.260	103.21	'POTTER COUNTY INTERCHANGE (WAUK 90343-A) 345/230/13.2KV TRANSFORMER CKT 1'
12G	06NR	0	'FROM->TO'	G11_058	'JONES STATION - TUCO INTERCHANGE 230KV CKT 1'	351	0.26032	122.1653	'MOORE COUNTY INTERCHANGE - POTTER COUNTY INTERCHANGE 230KV CKT 1'
12G	06NR	0	'FROM->TO'	G11_058	'JONES STATION - TUCO INTERCHANGE 230KV CKT 1'	351	0.26019	122.927	'GRAPEVINE INTERCHANGE - NICHOLS STATION 230KV CKT 1'
12G	06NR	0	'FROM->TO'	G11_058	'JONES STATION - TUCO INTERCHANGE 230KV CKT 1'	351	0.26017	119.2567	'BORDER 7345.00 - WOODWARD DISTRICT EHV 345KV CKT 1'
12G	06NR	0	'FROM->TO'	G11_058	'JONES STATION - TUCO INTERCHANGE 230KV CKT 1'	351	0.26001	122.5966	'PLANT X STATION (WH ALM20171) 230/115/13.2KV TRANSFORMER CKT 1'
12G	06NR	0	'FROM->TO'	G11_058	'JONES STATION - TUCO INTERCHANGE 230KV CKT 1'	351	0.25994	122.0229	'G11_012T 230.00 - HITCHLAND INTERCHANGE 230KV CKT 1'
12G	06NR	0	'FROM->TO'	G11_058	'JONES STATION - TUCO INTERCHANGE 230KV CKT 1'	351	0.25988	119.9124	'TUCO INTERCHANGE (UPDATE DATA) 345/230/13.2KV TRANSFORMER CKT 2'
12G	06NR	0	'FROM->TO'	G11_058	'JONES STATION - TUCO INTERCHANGE 230KV CKT 1'	351	0.25984	123.8698	'ELK CITY 230KV - SWEETWATER 230KV CKT 1'
12G	06NR	0	'FROM->TO'	G11_058	'JONES STATION - TUCO INTERCHANGE 230KV CKT 1'	351	0.25984	123.8696	'ELK CITY 230KV (ELKCTY-6) 230/138/13.8KV TRANSFORMER CKT 1'
12G	06NR	0	'FROM->TO'	G11_058	'JONES STATION - TUCO INTERCHANGE 230KV CKT 1'	351	0.25984	123.1555	'GRAPEVINE INTERCHANGE - STATELINE INTERCHANGE 230KV CKT 1'
12G	06NR	0	'FROM->TO'	G11_058	'JONES STATION - TUCO INTERCHANGE 230KV CKT 1'	351	0.25984	122.8067	'SPP-SWPS-02'
12G	06NR	0	'FROM->TO'	G11_058	'JONES STATION - TUCO INTERCHANGE 230KV CKT 1'	351	0.25984	122.8219	'SPP-SWPS-02A'
12G	06NR	0	'FROM->TO'	G11_058	'JONES STATION - TUCO INTERCHANGE 230KV CKT 1'	351	0.25984	122.8067	'STATELINE INTERCHANGE - STLN-DEMARC6 230KV CKT 1'
12G	06NR	0	'FROM->TO'	G11_058	'JONES STATION - TUCO INTERCHANGE 230KV CKT 1'	351	0.25984	122.8084	'STLN-DEMARC6 - SWEETWATER 230KV CKT 1'
12G	06NR	0	'FROM->TO'	G11_058	'JONES STATION - TUCO INTERCHANGE 230KV CKT 1'	351	0.25982	117.3996	'CHAVESCO 345.00 - EDDY COUNTY INTERCHANGE 345KV CKT 1'
12G	06NR	0	'FROM->TO'	G11_058	'JONES STATION - TUCO INTERCHANGE 230KV CKT 1'	351	0.25982	123.5443	'CHAVESCO 345.00 - TOLK STATION 345KV CKT 1'
12G	06NR	0	'FROM->TO'	G11_058	'JONES STATION - TUCO INTERCHANGE 230KV CKT 1'	351	0.25982	117.402	'EDDY COUNTY INTERCHANGE (ABB AEM30711) 345/230/13.2KV TRANSFORMER CKT 1'
12G	06NR	0	'FROM->TO'	G11_058	'JONES STATION - TUCO INTERCHANGE 230KV CKT 1'	351	0.25982	123.457	'SPP-SWPS-03'
12G	06NR	0	'FROM->TO'	G11_058	'JONES STATION - TUCO INTERCHANGE 230KV CKT 1'	351	0.25982	123.5271	'TOLK STATION (ABBXNL844501) 345/230/13.2KV TRANSFORMER CKT 1'
12G	06NR	0	'FROM->TO'	G11_058	'JONES STATION - TUCO INTERCHANGE 230KV CKT 1'	351	0.25942	119.5555	'TUCO INTERCHANGE (GE M1022338) 345/230/13.2KV TRANSFORMER CKT 1'
12G	06NR	0	'FROM->TO'	G11_058	'JONES STATION - TUCO INTERCHANGE 230KV CKT 1'	351	0.25828	122.8072	'TOLK STATION EAST - TOLK STATION TAP 230KV CKT 1'
12G	06NR	0	'FROM->TO'	G11_058	'JONES STATION - TUCO INTERCHANGE 230KV CKT 1'	351	0.25826	126.7874	'G05-17T 345.00 - Hitchland Interchange 345KV CKT 1'
12G	06NR	0	'FROM->TO'	G11_058	'JONES STATION - TUCO INTERCHANGE 230KV CKT 1'	351	0.25826	125.5692	'G05-17T 345.00 - POTTER COUNTY INTERCHANGE 345KV CKT 1'
12G	06NR	0	'FROM->TO'	G11_058	'JONES STATION - TUCO INTERCHANGE 230KV CKT 1'	351	0.25826	124.4745	'POTTER COUNTY INTERCHANGE (WAUK 90343-A) 345/230/13.2KV TRANSFORMER CKT 1'
12G	06NR	0	'FROM->TO'	G11_058	'JONES STATION - TUCO INTERCHANGE 230KV CKT 1'	351	0.25639	110.9847	'G05-15T 345.00 - OKLAUNION 345KV CKT 1'
12G	06NR	0	'FROM->TO'	G11_058	'JONES STATION - TUCO INTERCHANGE 230KV CKT 1'	351	0.25639	113.0845	'G05-15T 345.00 - TUCO INTERCHANGE 345KV CKT 1'
12G	06NR	0	'FROM->TO'	G11_058	'JONES STATION - TUCO INTERCHANGE 230KV CKT 1'	351	0.254	114.6073	'BORDER 7345.00 - TUCO INTERCHANGE 345KV CKT 1'
12G	06NR	0	'FROM->TO'	G11_058	'JONES STATION - TUCO INTERCHANGE 230KV CKT 1'	351	0.25275	118.9748	'AMARILLO SOUTH INTERCHANGE - G07-48T 230.00 230KV CKT 1'
12G	06NR	0	'FROM->TO'	G11_058	'JONES STATION - TUCO INTERCHANGE 230KV CKT 1'	351	0.24826	119.6973	'SWISHER COUNTY INTERCHANGE - TUCO INTERCHANGE 230KV CKT 1'
12G	06NR	0	'FROM->TO'	G11_058	'JONES STATION - TUCO INTERCHANGE 230KV CKT 1'	351	0.22501	140.1215	'TOLK STATION EAST - TUCO INTERCHANGE 230KV CKT 1'
12G	06NR	0	'FROM->TO'	G11_058	'JONES STATION - TUCO INTERCHANGE 230KV CKT 1'	351	0.22466	116.3455	'JONES STATION - Jones Station Bus#2 230KV CKT 1'
12G	06NR	0	'FROM->TO'	G11_058	'JONES STATION - TUCO INTERCHANGE 230KV CKT 1'	351	0.224	123.89	'TOLK STATION EAST - TUCO INTERCHANGE 230KV CKT 1'
12G	06ALL	0		G11_058	NCONV-Iteration Limit	0	0.195	9999.00	'DBL-HTCH-BVR'
12G	06NR	0	'FROM->TO'	G11_058	'JONES STATION - TUCO INTERCHANGE 230KV CKT 1'	351	0.18089	113.9897	'GRASSLAND INTERCHANGE - Jones Station Bus#2 230KV CKT 1'
12G	06ALL	0		G11_058	NCONV-Blown Up	559	0.139	85.38	'POTTER COUNTY INTERCHANGE (WAUK 90343-A) 345/230/13.2KV TRANSFORMER CKT 1'
12G	03ALL	0		G11_058	NCONV-Iteration Limit	0	0.132	9999.00	'DBL-MATT-TAT'
12G	03ALL2	0		G11_058	NCONV-Iteration Limit	0	0.132	9999.00	'DBL-MATT-TAT'
12G	06NR	0	'FROM->TO'	G11_058	'TUCO INTERCHANGE (GE M1022338) 345/230/13.2KV TRANSFORMER CKT 1'	560	0.128	105.86	'TUCO INTERCHANGE (UPDATE DATA) 345/230/13.2KV TRANSFORMER CKT 2'
12G	06NR	0	'FROM->TO'	G11_058	'TUCO INTERCHANGE (GE M1022338) 345/230/13.2KV TRANSFORMER CKT 1'	560	0.128	105.76	'TUCO INTERCHANGE (UPDATE DATA) 345/230/13.2KV TRANSFORMER CKT 2'
12G	03ALL	0		G11_058	NCONV-Iteration Limit	0	0.127	9999.00	'DBL-WICH-THI'
12G	03ALL2	0		G11_058	NCONV-Blown Up	0	0.127	9999.00	'DBL-WICH-THI'
12G	06NR	0	'FROM->TO'	G11_058	'LUBBOCK EAST INTERCHANGE - TUCO INTERCHANGE 115KV CKT 1'	160	0.1265	119.1326	'JONES STATION - TUCO INTERCHANGE 230KV CKT 1'
12G	06NR	0	'FROM->TO'	G11_058	'TUCO INTERCHANGE (UPDATE DATA) 345/230/13.2KV TRANSFORMER CKT 2'	560	0.125	103.51	'TUCO INTERCHANGE (GE M1022338) 345/230/13.2KV TRANSFORMER CKT 1'
12G	06NR	0	'FROM->TO'	G11_058	'TUCO INTERCHANGE (UPDATE DATA) 345/230/13.2KV TRANSFORMER CKT 2'	560	0.125	103.45	'TUCO INTERCHANGE (GE M1022338) 345/230/13.2KV TRANSFORMER CKT 1'
12G	03ALL	0		G11_058	NCONV-Iteration Limit	0	0.112	9999.00	'SPP-SWPS-03'
12G	03ALL2	0		G11_058	NCONV-Iteration Limit	0	0.112	9999.00	'SPP-SWPS-03'
17SP	00NR	0	'FROM->TO'	G11_058	'Jones Station Bus#2 - LUBBOCK SOUTH INTERCHANGE 230KV CKT 2'	351	0.111	103.17	'JONES STATION - LUBBOCK SOUTH INTERCHANGE 230KV CKT 1'
17SP	00NR	0	'FROM->TO'	G11_058	'Jones Station Bus#2 - LUBBOCK SOUTH INTERCHANGE 230KV CKT 2'	351	0.10744	110.1363	'JONES STATION - LUBBOCK SOUTH INTERCHANGE 230KV CKT 1'
13SP	00NR	0	'FROM->TO'	G11_058	'Jones Station Bus#2 - LUBBOCK SOUTH INTERCHANGE 230KV CKT 2'	351	0.107	103.4415	'JONES STATION - LUBBOCK SOUTH INTERCHANGE 230KV CKT 1'
12SP	00NR	0	'FROM->TO'	G11_058	'Jones Station Bus#2 - LUBBOCK SOUTH INTERCHANGE 230KV CKT 2'	351	0.10623	103.1994	'JONES STATION - LUBBOCK SOUTH INTERCHANGE 230KV CKT 1'
12G	06NR	0	'TO->FROM'	G11_058	'ALLEN SUB - LUBBOCK SOUTH INTERCHANGE 115KV CKT 1'	160	0.09118	108.0207	'JONES STATION - TUCO INTERCHANGE 230KV CKT 1'
17SP	00NR	0	'FROM->TO'	G11_058	'GRASSLAND INTERCHANGE (PENN 0105951) 230/115/13.2KV TRANSFORMER CKT 1'	115	0.069	106.19	'LUBBOCK SOUTH INTERCHANGE (ABB LLM60043) 230/115/13.2KV TRANSFORMER CKT 1'
17SP	00NR	0	'FROM->TO'	G11_058	'GRASSLAND INTERCHANGE (PENN 0105951) 230/115/13.2KV TRANSFORMER CKT 1'	115	0.069	102.30	'LUBBOCK SOUTH INTERCHANGE (ABB LLM60043) 230/115/13.2KV TRANSFORMER CKT 1'
17SP	00NR	0	'TO->FROM'	G11_058	'ALLEN SUB - LUBBOCK SOUTH INTERCHANGE 115KV CKT 1'	160	0.054	101.02	'WOLFFORTH INTERCHANGE - YUMA INTERCHANGE 115KV CKT 1'
17SP	00NR	0	'FROM->TO'	G11_058	'LUBBOCK SOUTH INTERCHANGE (ABB LLM60043) 230/115/13.2KV TRANSFORMER CKT 1'	290	0.053	117.52	'Jones Station Bus#2 - LUBBOCK EAST INTERCHANGE 230KV CKT 1'
17SP	00NR	0	'FROM->TO'	G11_058	'LUBBOCK SOUTH INTERCHANGE (ABB LLM60043) 230/115/13.2KV TRANSFORMER CKT 1'	290	0.053	108.66	'Jones Station Bus#2 - LUBBOCK EAST INTERCHANGE 230KV CKT 1'
12G	03ALL2	0		G11_058	NCONV-Blown Up	0	0.053	9999.00	'DBL-CIR-RENO'
12G	03ALL2	0		G11_058	NCONV-Iteration Limit	0	0.053	9999.00	'DBL-MULG-CIR'
12G	03ALL2	0		G11_058	NCONV-Iteration Limit	0	0.053	9999.00	'DBL-SPRVL-MU'
12G	03ALL	0		G11_058	NCONV-Blown Up	0	0.053	9999.00	'DBL-CIR-RENO'
12G	03ALL	0		G11_058	NCONV-Iteration Limit	0	0.053	9999.00	'DBL-MULG-CIR'
12G	03ALL	0		G11_058	NCONV-Iteration Limit	0	0.053	9999.00	'DBL-SPRVL-MU'
17SP	00NR	0	'FROM->TO'	G11_058	'LUBBOCK SOUTH INTERCHANGE (ABB LLM60043) 230/115/13.2KV TRANSFORMER CKT 1'	290	0.053	100.83	'LUBBOCK EAST INTERCHANGE (ENRCO 136162) 230/115/13.2KV TRANSFORMER CKT 1'
12SP	00NR	0	'FROM->TO'	G11_058	'LUBBOCK SOUTH INTERCHANGE (ABB LLM60043) 230/115/13.2KV TRANSFORMER CKT 1'	290	0.049	104.43	'Jones Station Bus#2 - LUBBOCK EAST INTERCHANGE 230KV CKT 1'
13SP	00NR	0	'FROM->TO'	G11_058	'LUBBOCK SOUTH INTERCHANGE (ABB LLM60043) 230/115/13.2KV TRANSFORMER CKT 1'	290	0.049	108.47	'Jones Station Bus#2 - LUBBOCK EAST INTERCHANGE 230KV CKT 1'
13SP	00NR	0	'FROM->TO'	G11_058	'LUBBOCK SOUTH INTERCHANGE (ABB LLM60043) 230/115/13.2KV TRANSFORMER CKT 1'	290	0.049	101.62	'Jones Station Bus#2 - LUBBOCK EAST INTERCHANGE 230KV CKT 1'
12G	03ALL	0		G11_058	NCONV-Iteration Limit	1792	0.041	47.07	'G11-17T 345.00 - POST ROCK 345KV CKT 1'
12G	06NR	0	'TO->FROM'	G11_058	'FLOYD COUNTY INTERCHANGE - G11_025T 115.00 115KV CKT 1'	96	0.03835	101.131	'JONES STATION - TUCO INTERCHANGE 230KV CKT 1'
13SP	00NR	0	'FROM->TO'	G11_058	'HOBBS INTERCHANGE (ME C0482951) 230/115/13.2KV TRANSFORMER CKT 1'	150	0.036	108.79	'HOBBS INTERCHANGE - LEA COUNTY INTERCHANGE 230KV CKT 1'
13SP	00NR	0	'FROM->TO'	G11_058	'HOBBS INTERCHANGE (ME C0482951) 230/115/13.2KV TRANSFORMER CKT 1'	150	0.036	107.81	'HOBBS INTERCHANGE - LEA COUNTY INTERCHANGE 230KV CKT 1'
17SP	00NR	0	'FROM->TO'	G11_058	'HOBBS INTERCHANGE (ME C0482951) 230/115/13.2KV TRANSFORMER CKT 1'	150	0.035	132.75	'HOBBS INTERCHANGE - LEA COUNTY INTERCHANGE 230KV CKT 1'
17SP	00NR	0	'FROM->TO'	G11_058	'HOBBS INTERCHANGE (ME C0482951) 230/115/13.2KV TRANSFORMER CKT 1'	150	0.035	131.45	'HOBBS INTERCHANGE - LEA COUNTY INTERCHANGE 230KV CKT 1'
12G	06ALL	0		G11_058	NCONV-Iteration Limit	0	0.032	9999.00	'SPP-AEPW-25'
12WP	00NR	2	'FROM->TO'	G11_058	'TUCO INTERCHANGE (GE M1022338) 345/230/13.2KV TRANSFORMER CKT 1'	560	0.201	101.74	'TUCO INTERCHANGE (UPDATE DATA) 345/230/13.2KV TRANSFORMER CKT 2'
12WP	00NR	2	'FROM->TO'	G11_058	'TUCO INTERCHANGE (GE M1022338) 345/230/13.2KV TRANSFORMER CKT 1'	560	0.201	100.88	'TUCO INTERCHANGE (UPDATE DATA) 345/230/13.2KV TRANSFORMER CKT 2'

SEASON	GROUP	SCENARIO	DIRECTION	SOURCE	MONITORED ELEMENT	RATE B (MVA)	TDF	(%MVA) LOADING	CONTINGENCY
12G	06NR	2	'FROM->TO'	G11_058	'TUCO INTERCHANGE (GE M1022338) 345/230/13.2KV TRANSFORMER CKT 1'	560	0.184	104.30	'TUCO INTERCHANGE (UPDATE DATA) 345/230/13.2KV TRANSFORMER CKT 2'
12G	06NR	2	'FROM->TO'	G11_058	'TUCO INTERCHANGE (GE M1022338) 345/230/13.2KV TRANSFORMER CKT 1'	560	0.184	103.20	'TUCO INTERCHANGE (UPDATE DATA) 345/230/13.2KV TRANSFORMER CKT 2'
12G	06NR	2	'FROM->TO'	G11_058	'TUCO INTERCHANGE (UPDATE DATA) 345/230/13.2KV TRANSFORMER CKT 2'	560	0.177	100.66	'TUCO INTERCHANGE (GE M1022338) 345/230/13.2KV TRANSFORMER CKT 1'
12G	06NR	2	'FROM->TO'	G11_058	'TUCO INTERCHANGE (UPDATE DATA) 345/230/13.2KV TRANSFORMER CKT 2'	560	0.177	100.00	'TUCO INTERCHANGE (GE M1022338) 345/230/13.2KV TRANSFORMER CKT 1'
12G	06NR	2	'FROM->TO'	G11_058	'LUBBOCK EAST INTERCHANGE - TUCO INTERCHANGE 115KV CKT 1'	160	0.13054	118.3733	'JONES STATION - TUCO INTERCHANGE 230KV CKT 1'
17SP	00NR	2	'FROM->TO'	G11_058	'Jones Station Bus#2 - LUBBOCK SOUTH INTERCHANGE 230KV CKT 2'	351	0.110	100.41	'JONES STATION - LUBBOCK SOUTH INTERCHANGE 230KV CKT 1'
17SP	00NR	2	'FROM->TO'	G11_058	'Jones Station Bus#2 - LUBBOCK SOUTH INTERCHANGE 230KV CKT 2'	351	0.10432	111.7181	'JONES STATION - LUBBOCK SOUTH INTERCHANGE 230KV CKT 1'
13SP	00NR	2	'FROM->TO'	G11_058	'Jones Station Bus#2 - LUBBOCK SOUTH INTERCHANGE 230KV CKT 2'	351	0.103	105.7498	'JONES STATION - LUBBOCK SOUTH INTERCHANGE 230KV CKT 1'
12SP	00NR	2	'FROM->TO'	G11_058	'Jones Station Bus#2 - LUBBOCK SOUTH INTERCHANGE 230KV CKT 2'	351	0.1021	105.6266	'JONES STATION - LUBBOCK SOUTH INTERCHANGE 230KV CKT 1'
12G	06NR	2	'TO->FROM'	G11_058	'ALLEN SUB - LUBBOCK SOUTH INTERCHANGE 115KV CKT 1'	160	0.09369	108.1914	'JONES STATION - TUCO INTERCHANGE 230KV CKT 1'
17SP	00NR	2	'FROM->TO'	G11_058	'GRASSLAND INTERCHANGE (PENN 0105951) 230/115/13.2KV TRANSFORMER CKT 1'	115	0.070	106.72	'LUBBOCK SOUTH INTERCHANGE (ABB LLM60043) 230/115/13.2KV TRANSFORMER CKT 1'
17SP	00NR	2	'FROM->TO'	G11_058	'GRASSLAND INTERCHANGE (PENN 0105951) 230/115/13.2KV TRANSFORMER CKT 1'	115	0.070	102.97	'LUBBOCK SOUTH INTERCHANGE (ABB LLM60043) 230/115/13.2KV TRANSFORMER CKT 1'
17SP	00NR	2	'TO->FROM'	G11_058	'ALLEN SUB - LUBBOCK SOUTH INTERCHANGE 115KV CKT 1'	160	0.056	102.69	'WOLFFORTH INTERCHANGE - YUMA INTERCHANGE 115KV CKT 1'
17SP	00NR	2	'FROM->TO'	G11_058	'LUBBOCK SOUTH INTERCHANGE (ABB LLM60043) 230/115/13.2KV TRANSFORMER CKT 1'	290	0.054	118.52	'Jones Station Bus#2 - LUBBOCK EAST INTERCHANGE 230KV CKT 1'
17SP	00NR	2	'FROM->TO'	G11_058	'LUBBOCK SOUTH INTERCHANGE (ABB LLM60043) 230/115/13.2KV TRANSFORMER CKT 1'	290	0.054	109.53	'Jones Station Bus#2 - LUBBOCK EAST INTERCHANGE 230KV CKT 1'
17SP	00NR	2	'FROM->TO'	G11_058	'LUBBOCK SOUTH INTERCHANGE (ABB LLM60043) 230/115/13.2KV TRANSFORMER CKT 1'	290	0.054	101.74	'LUBBOCK EAST INTERCHANGE (ENRCO 136162) 230/115/13.2KV TRANSFORMER CKT 1'
12SP	00NR	2	'FROM->TO'	G11_058	'LUBBOCK SOUTH INTERCHANGE (ABB LLM60043) 230/115/13.2KV TRANSFORMER CKT 1'	290	0.051	105.37	'Jones Station Bus#2 - LUBBOCK EAST INTERCHANGE 230KV CKT 1'
13SP	00NR	2	'FROM->TO'	G11_058	'LUBBOCK SOUTH INTERCHANGE (ABB LLM60043) 230/115/13.2KV TRANSFORMER CKT 1'	290	0.050	109.27	'Jones Station Bus#2 - LUBBOCK EAST INTERCHANGE 230KV CKT 1'
13SP	00NR	2	'FROM->TO'	G11_058	'LUBBOCK SOUTH INTERCHANGE (ABB LLM60043) 230/115/13.2KV TRANSFORMER CKT 1'	290	0.050	102.37	'Jones Station Bus#2 - LUBBOCK EAST INTERCHANGE 230KV CKT 1'
12G	06NR	2	'TO->FROM'	G11_058	'FLOYD COUNTY INTERCHANGE - G11_025T 115.00 115KV CKT 1'	96	0.03889	100.7228	'JONES STATION - TUCO INTERCHANGE 230KV CKT 1'
12G	06NR	3	'FROM->TO'	G11_058	'LUBBOCK EAST INTERCHANGE - TUCO INTERCHANGE 115KV CKT 1'	160	0.13271	121.5771	'JONES STATION - TUCO INTERCHANGE 230KV CKT 1'
17SP	00NR	3	'FROM->TO'	G11_058	'Jones Station Bus#2 - LUBBOCK SOUTH INTERCHANGE 230KV CKT 2'	351	0.10576	121.1078	'JONES STATION - LUBBOCK SOUTH INTERCHANGE 230KV CKT 1'
13SP	00NR	3	'FROM->TO'	G11_058	'Jones Station Bus#2 - LUBBOCK SOUTH INTERCHANGE 230KV CKT 2'	351	0.10402	114.8428	'JONES STATION - LUBBOCK SOUTH INTERCHANGE 230KV CKT 1'
12SP	00NR	3	'FROM->TO'	G11_058	'Jones Station Bus#2 - LUBBOCK SOUTH INTERCHANGE 230KV CKT 2'	351	0.10319	115.2512	'JONES STATION - LUBBOCK SOUTH INTERCHANGE 230KV CKT 1'
17SP	00NR	3	'TO->FROM'	G11_058	'ALLEN SUB - LUBBOCK SOUTH INTERCHANGE 115KV CKT 1'	160	0.10067	100.972	'JONES STATION - TUCO INTERCHANGE 230KV CKT 1'
12G	06NR	3	'TO->FROM'	G11_058	'ALLEN SUB - LUBBOCK SOUTH INTERCHANGE 115KV CKT 1'	160	0.10034	118.4289	'JONES STATION - TUCO INTERCHANGE 230KV CKT 1'
17SP	00NR	3	'TO->FROM'	G11_058	'LUBBOCK EAST INTERCHANGE - LUBBOCK SOUTH INTERCHANGE 115KV CKT 1'	160	0.0809	109.0431	'Jones Station Bus#2 - LUBBOCK EAST INTERCHANGE 230KV CKT 1'
17SP	00NR	3	'TO->FROM'	G11_058	'ALLEN SUB - LUBBOCK SOUTH INTERCHANGE 115KV CKT 1'	160	0.07603	106.1167	'WOLFFORTH INTERCHANGE (WH 7001668) 230/115/13.2KV TRANSFORMER CKT 1'
12SP	00NR	3	'TO->FROM'	G11_058	'LUBBOCK EAST INTERCHANGE - LUBBOCK SOUTH INTERCHANGE 115KV CKT 1'	160	0.07592	102.4688	'Jones Station Bus#2 - LUBBOCK EAST INTERCHANGE 230KV CKT 1'
13SP	00NR	3	'TO->FROM'	G11_058	'LUBBOCK EAST INTERCHANGE - LUBBOCK SOUTH INTERCHANGE 115KV CKT 1'	160	0.07537	104.0513	'Jones Station Bus#2 - LUBBOCK EAST INTERCHANGE 230KV CKT 1'
17SP	00NR	3	'TO->FROM'	G11_058	'ALLEN SUB - LUBBOCK SOUTH INTERCHANGE 115KV CKT 1'	160	0.05859	104.7117	'WOLFFORTH INTERCHANGE - YUMA INTERCHANGE 115KV CKT 1'
12G	06NR	3	'TO->FROM'	G11_058	'ALLEN SUB - LUBBOCK SOUTH INTERCHANGE 115KV CKT 1'	160	0.05778	100.154	'WOLFFORTH INTERCHANGE - YUMA INTERCHANGE 115KV CKT 1'
17SP	00NR	3	'TO->FROM'	G11_058	'ALLEN SUB - LUBBOCK SOUTH INTERCHANGE 115KV CKT 1'	160	0.04522	102.8308	'CARLISLE INTERCHANGE (WH XHS70711) 230/115/13.2KV TRANSFORMER CKT 1'
17SP	00NR	3	'TO->FROM'	G11_058	'ALLEN SUB - LUBBOCK SOUTH INTERCHANGE 115KV CKT 1'	160	0.0448	109.0435	'CARLISLE INTERCHANGE - TUCO INTERCHANGE 230KV CKT 1'
12SP	00NR	3	'TO->FROM'	G11_058	'ALLEN SUB - LUBBOCK SOUTH INTERCHANGE 115KV CKT 1'	160	0.04411	100.1938	'CARLISLE INTERCHANGE - TUCO INTERCHANGE 230KV CKT 1'
12G	06NR	3	'TO->FROM'	G11_058	'FLOYD COUNTY INTERCHANGE - G11_025T 115.00 115KV CKT 1'	96	0.03949	102.303	'JONES STATION - TUCO INTERCHANGE 230KV CKT 1'

H: Power Flow Analysis (Other Constraints Not Requiring Mitigation)

****The results will be available by request****

I: Stability Study for Group 1

See next page.

MITSUBISHI ELECTRIC

MITSUBISHI ELECTRIC POWER PRODUCTS, INC.
POWER SYSTEMS ENGINEERING SERVICES
530 KEYSTONE DRIVE
WARRENDALE, PA 15086, U.S.A.

Phone: (724) 778-5111 Fax: (724) 778-5149
Home Page: www.meppi.com

Southwest Power Pool, Inc. (SPP)

DISIS-2011-002 (Group 1) Definitive Impact Study

Draft Report
For Review

PXE-0544
Revision #00

January 2012

Submitted By:
Mitsubishi Electric Power Products, Inc. (MEPPI)
Power Systems Engineering Services Department
Warrendale, PA

Title: **DISIS-2011-002 (Group 1) Definitive Impact Study: Draft Report for Review PXE-0544**

Date: January 2012

Author: Nicholas W. Tenza; Engineer I, Power Systems Engineering Dept. *Nicholas W. Tenza*

Elizabeth M. Cook; Sr. Engineer, Power Systems Engineering Dept. *Elizabeth M. Cook*

Reviewed: Robert T. Hellested, Deputy Mngr., Power Systems Engineering Dept. *Robert T. Hellested*

EXECUTIVE SUMMARY

SPP requested a Definitive Interconnection System Impact Study (DISIS). The DISIS required a Power Factor Analysis and a Stability Analysis detailing the impacts of the interconnecting projects as shown in Table ES-1.

Table ES-1
Interconnection Projects Evaluated

Request	Size (MW)	Turbine Model	Point of Interconnection (POI)
GEN-2011-051	104.4	Vestas V90 1.8 MW	Tap on the Woodward - Tatonga 345 kV Line (G11_051-TAP, 562075)
GEN-2011-054	299	Siemens 2.3 MW	Cimarron 345 kV (514901)

Several stability problems were seen in the initial stability simulations. Four faults caused system instability during winter peak conditions:

- Fault 10: 3 phase fault on the GEN-2011-051 Tap to Woodward 345 kV line
- Fault 12: 3 phase fault on the GEN-2011-051 Tap to Tatonga 345 kV line
- Fault 14: 3 phase fault on the Tatonga to Mathewson 345 kV line, Circuit 1
- Fault 21: 3 phase fault on the Arcadia to Northwest 345 kV line

After discussion with SPP, the best possible solution was to add a line from the Woodward 345 kV bus to the Tatonga 345 kV bus. With the addition of this line, all cases reached system stability and desired voltages were achieved.

SUMMARY OF POWER FACTOR ANALYSIS

With the addition of the Woodward to Tatonga 345 kV line, the Power Factor Analysis shows that GEN-2011-051 has a power factor range of 0.5409 lagging (supplying) to 0.6931 leading (absorbing) and GEN-2011-054 has a power factor range of 0.5485 to 0.8292 lagging (supplying).

Without the additional Woodward to Tatonga 345 kV line, GEN-2011-051 has a power factor range of 0.3258 lagging (supplying) to 0.8316 leading (absorbing) and GEN-2011-054 has a power factor range of 0.5689 to 0.9390 lagging (supplying).

SUMMARY OF STABILITY ANALYSIS

The Stability Analysis determined that after adding a line from the Woodward 345 kV bus to the Tatonga 345 kV bus, no wind turbine tripping or system instability occurs from interconnecting GEN-2011-051 and GEN-2011-054 at 100% output.

Table of Contents

Section 1: Objectives 4
Section 2: Background 4
Section 3: Power Factor Analysis 13
3.1: Study Project – GEN-2011-051 13
3.2: Study Project – GEN-2011-054 15
3.3: Overall Summary 17
Section 4: Stability Analysis 17
Section 5: Conclusions 28

List of Tables

Table 2-1: Interconnection Project Evaluated 5
Table 2-2: Previously Queued Nearby Interconnection Projects Included 5
Table 2-3: Case List with Contingency Description 9
Table 3.1-1: Power Factor Analysis: GEN-2011-051 (104.4 MW) 14
Table 3.2-1: Power Factor Analysis: GEN-2011-054 (299 MW) 16
Table 4-1: Calculated Single-Phase Fault Impedances 18
Table 4-2: Stability Analysis Summary of Results 20

List of Figures

Figure 2-1. Power flow one-line diagram for interconnection project GEN-2011-051 7
Figure 2-2. Power flow one-line diagram for interconnection project GEN-2011-054 8
Figure 4-1. Response of GEN-2011-051 project during case FLT55-3PH for summer peak conditions 22
Figure 4-2. Response of GEN-2011-054 (Gen 1) project during case FLT55-3PH for summer peak conditions 23
Figure 4-3 Response of selected area bus voltages for case FLT55-3PH for summer peak conditions 24
Figure 4-4. Response of GEN-2011-051 project during case FLT55-3PH for winter peak conditions 25
Figure 4-5. Response of GEN-2011-054 (Gen 1) project during case FLT55-3PH for winter peak conditions 26
Figure 4-6. Response of selected area bus voltages for case FLT55-3PH for winter peak conditions 27

SECTION 1: OBJECTIVES

The objective of this report is to provide Southwest Power Pool, Inc. (SPP) with the deliverables for the "GEN-2011-002 (Group 1) Definitive Impact Study." SPP requested an Interconnection System Impact Study for GEN-2011-051 and GEN-2011-054, which requires a Power Factor Analysis, a Stability Analysis, and an Impact Study Report.

SECTION 2: BACKGROUND

The Siemens Power Technologies, Inc. PSS/E power system simulation program Version 30.3.3 was used for this study. SPP provided the stability database cases for summer peak and winter peak seasons and a list of contingencies to be examined. The model includes the study project and the previously queued projects as listed in Table 2-1 and Table 2-2, respectively. Refer to Appendix A for the steady-state and dynamic model data for the study projects. A power flow one-line diagram of GEN-2011-051 and GEN-2011-054 interconnection projects is shown in Figure 2-1 and Figure 2-2, respectively.

The Power Factor analysis will determine the power factor at the point of interconnection for the wind interconnection project for pre-contingency and post-contingency conditions. Table 2-4 lists the contingencies developed from the three-phase fault definitions provided in the Group's interconnection impact study request.

The Stability Analysis will determine the impacts of the new interconnecting project on the stability and voltage recovery of the nearby system and the ability of the interconnecting project to meet FERC Order 661A. If problems with stability or voltage recovery are identified, the need for reactive compensation or system upgrades will be investigated. Three-phase and single-phase faults will be examined as listed in Table 2-3.

Table 2-1
Interconnection Projects Evaluated

Request	Size (MW)	Turbine Model	Point of Interconnection (POI)
GEN-2011-051	104.4	Vestas V90 1.8 MW	Tap on the Woodward - Tatonga 345 kV Line (G11_051-TAP, 562075)
GEN-2011-054	299	Siemens 2.3 MW	Cimarron 345 kV (514901)

Table 2-2
Previously Queued Nearby Interconnection Projects Included

Request	Size (MW)	Turbine Model	Point of Interconnection (POI)
GEN-2001-014	94.5	Suzlon 2.1 MW	Fort Supply 138 kV (520920)
GEN-2001-037	102	GE 1.5 MW	Woodward - Mooreland 138 kV (515785)
GEN-2005-005	120	SMK 223	Woodward - Mooreland 138 kV (515785)
GEN-2005-008	120	GE 1.5 MW	Woodward 138 kV (514785)
GEN-2006-024S	18.9	Suzlon 2.1 MW	Buffalo Bear 69 kV (521120)
GEN-2006-046	132	Mitsubishi 2.4 MW	Dewey 138 kV (514787)
GEN-2007-006	161.7	Suzlon 2.1 MW	Roman Nose 138 kV (514823)
GEN-2007-021	200	GE 1.6 MW	Tatonga 345 kV (515407)
GEN-2007-043	200	GE 1.6 MW	Minco 345 kV (514801)
GEN-2007-044	299.2	GE 1.6 MW	Tatonga 345 kV (515407)
GEN-2007-050	175.2	Siemens 2.3 MW	Woodward 138 kV (515376)
GEN-2007-051	199.5	Mitsubishi 2.4 MW	Mooreland 138 kV (52099)
GEN-2007-062	765	GE 1.5 MW	Woodward 345 kV (515735)
GEN-2008-003	101.2	Siemens 2.3 MW	Woodward 138 kV (515376)

Table 2-2 (Continued)
Previously Queued Nearby Interconnection Projects Included

Request	Size (MW)	Turbine Model	Point of Interconnection (POI)
GEN-2008-019	300	Mitsubishi 2.4 MW	Tatonga 345 kV (515407)
GEN-2008-029	250.5	GE 1.5 MW	Woodward 138 kV (515376)
GEN-2008-044	197.8	Siemens SWT 2.3 MW	Tatonga 345 kV (515407)
GEN-2010-008	64.4	Vestas V90 1.8 MW	Fargo JCT 69 kV (521196)
GEN-2010-011	29.7	Siemens SWT 2.3 MW	Addition to GEN-2008-044 34.5 kV bus (576503)
GEN-2010-040	300	RePower 2.05 MW	Cimarron 345 kV (514901)
GEN-2010-043	320	GENROU	Mooreland 345 kV (560304)
GEN-2011-007	250	RePower 2.05 MW	Mathewson 345 kV (560368)
GEN-2011-010	100.8	GE 1.6 MW	Minco 345 kV (514801)
GEN-2011-019	299	Siemens 2.3 MW	Woodward 345 kV (515735)
GEN-2011-020	299	Siemens 2.3 MW	Woodward 345 kV (515735)
GEN-2011-024	299	Siemens 2.3 MW	Tatonga 345 kV (515407)

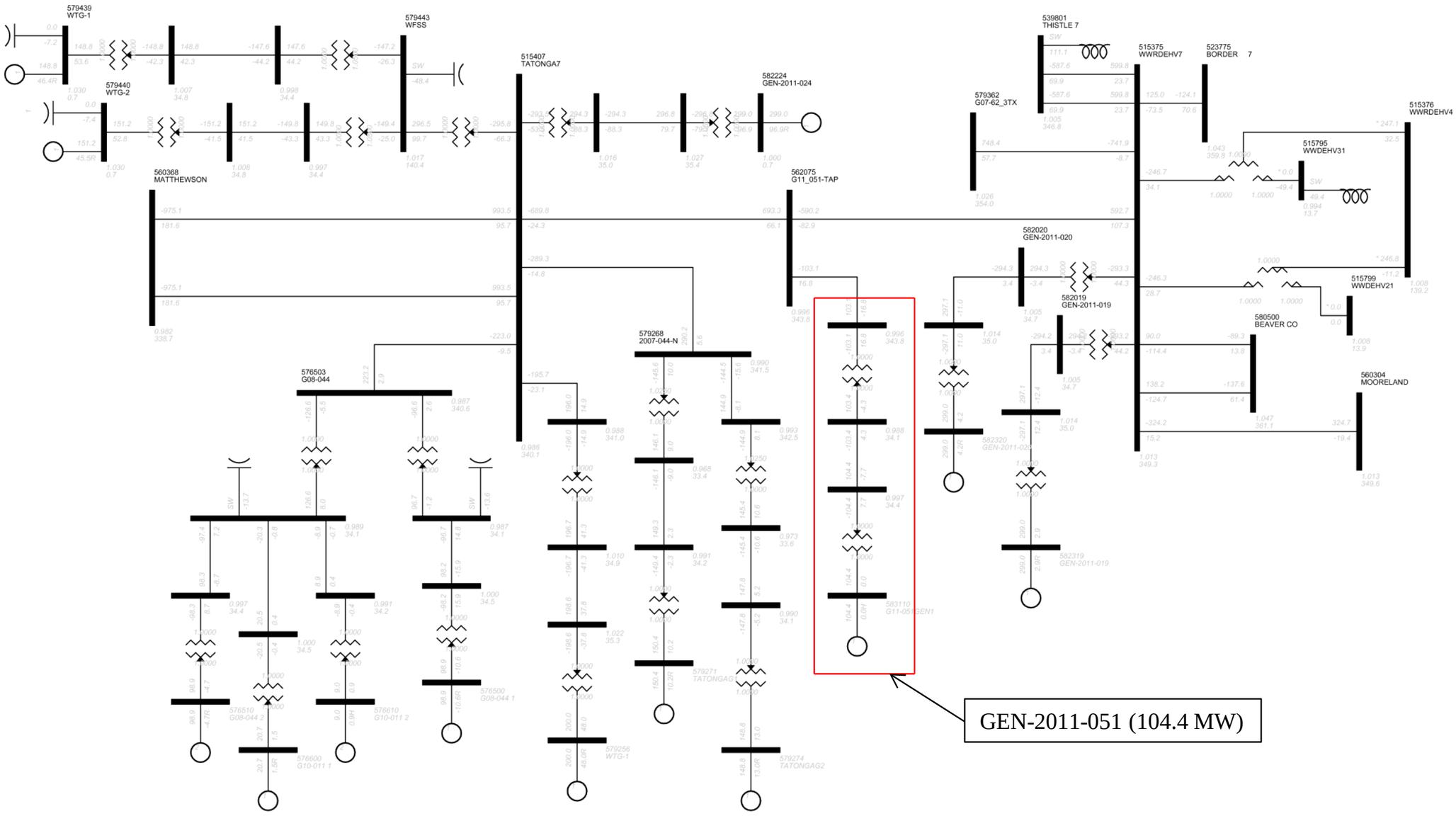

Figure 2-1. Power flow one-line diagram for interconnection project GEN-2011-051 (104.4 MW).

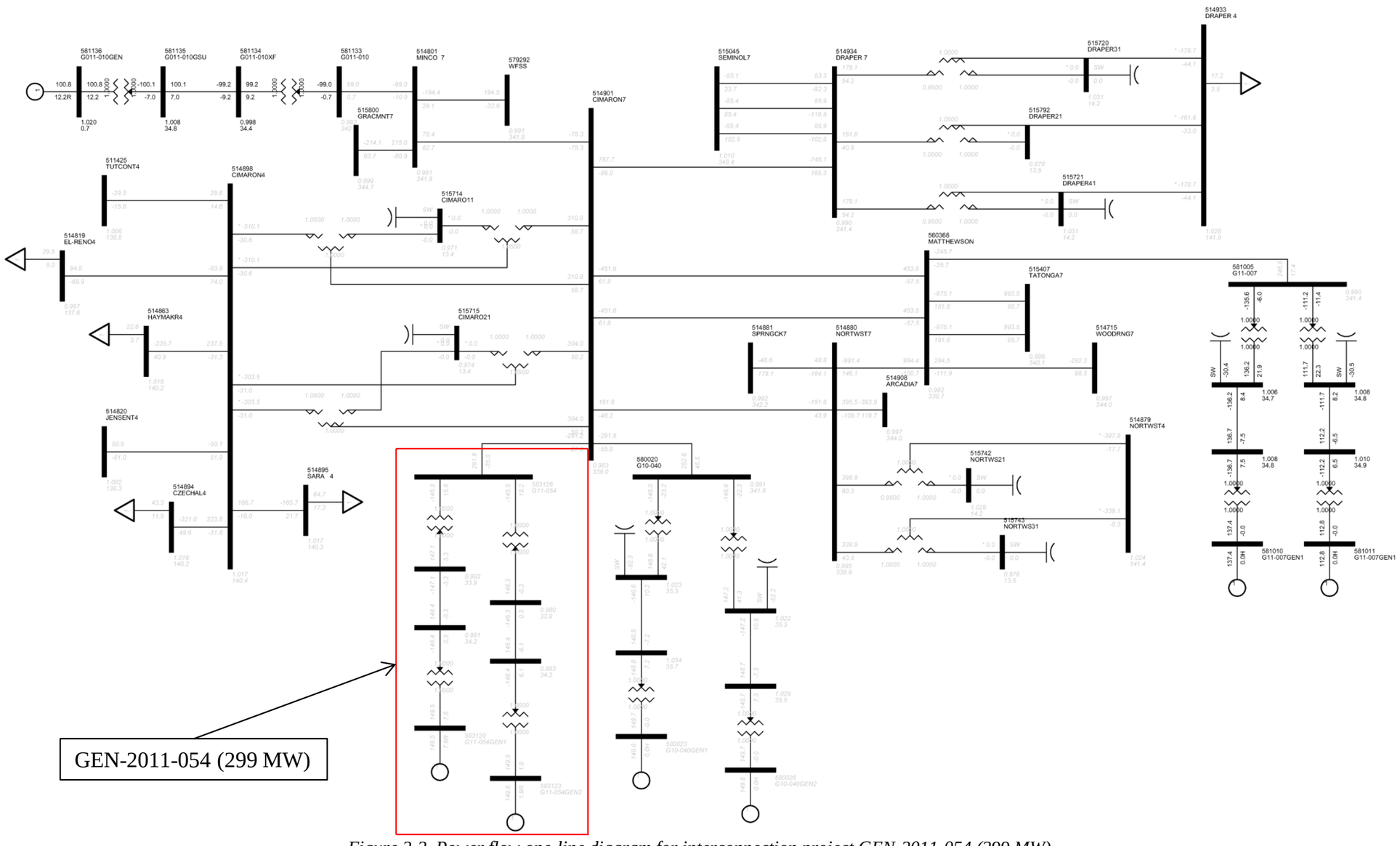

Figure 2-2. Power flow one-line diagram for interconnection project GEN-2011-054 (299 MW).

Table 2-3
Case List with Contingency Description

Ref. No.	Case Name	Description
1	FLT01-3PH	3 phase fault on the Woodward (515375) to Border (523775) 345 kV line, near Woodward.
		a. Apply fault at the Woodward 345 kV bus.
		b. Clear fault after 5 cycles by tripping the faulted line.
		c. Wait 20 cycles, and then re-close the line in (b) back into the fault.
		d. Leave fault on for 5 cycles, then trip the line in (b) and remove fault.
2	FLT02-1PH	*Single phase fault and sequence like previous*
3	FLT03-3PH	3 phase fault on the Woodward (515375) to Mooreland (560304) 345 kV line, near Woodward.
		a. Apply fault at the Woodward 345 kV bus.
		b. Clear fault after 5 cycles by tripping the faulted line.
		c. Wait 20 cycles, and then re-close the line in (b) back into the fault.
		d. Leave fault on for 5 cycles, then trip the line in (b) and remove fault.
4	FLT04-1PH	*Single phase fault and sequence like previous*
5	FLT05-3PH	3 phase fault on the Woodward (515375) to Beaver County (580500) 345 kV line, near Woodward.
		a. Apply fault at the Woodward 345 kV bus.
		b. Clear fault after 5 cycles by tripping the faulted line.
		c. Wait 20 cycles, and then re-close the line in (b) back into the fault.
		d. Leave fault on for 5 cycles, then trip the line in (b) and remove fault.
6	FLT06-1PH	*Single phase fault and sequence like previous*
7	FLT07-3PH	3 phase fault on the Woodward (515375) to Thistle (539801) 345 kV line, near Woodward.
		a. Apply fault at the Woodward 345 kV bus.
		b. Clear fault after 5 cycles by tripping the faulted line.
		c. Wait 20 cycles, and then re-close the line in (b) back into the fault.
		d. Leave fault on for 5 cycles, then trip the line in (b) and remove fault.
8	FLT08-1PH	*Single phase fault and sequence like previous*
9	FLT09-3PH	3 phase fault on the Woodward 345 kV (515375) to 138 kV (515376)/13.8 kV (515795) XFMR, near the 345 kV bus.
		a. Apply fault at Woodward 345 kV bus.
		b. Clear fault after 5 cycles by tripping the faulted line.
10	FLT10-3PH	3 phase fault on the GEN-2011-051 Tap (562075) to Woodward (515375) 345 kV line, near GEN Tap.
		a. Apply fault at the GEN-2011-051 Tap 345 kV bus.
		b. Clear fault after 5 cycles by tripping the faulted line.
		c. Wait 20 cycles, and then re-close the line in (b) back into the fault.
		d. Leave fault on for 5 cycles, then trip the line in (b) and remove fault.
11	FLT11-1PH	*Single phase fault and sequence like previous*
12	FLT12-3PH	3 phase fault on the GEN-2011-051 Tap (562075) to Tatonga (515407) 345 kV line, near GEN Tap.
		a. Apply fault at the GEN-2011-051 Tap 345 kV bus.
		b. Clear fault after 5 cycles by tripping the faulted line.
		c. Wait 20 cycles, and then re-close the line in (b) back into the fault.
		d. Leave fault on for 5 cycles, then trip the line in (b) and remove fault.
13	FLT13-1PH	*Single phase fault and sequence like previous*
14	FLT14-3PH	3 phase fault on the Tatonga (515407) to Mathewson (560368) 345 kV line ckt. 1, near Tatonga.
		a. Apply fault at the Tatonga 345 kV bus.
		b. Clear fault after 5 cycles by tripping the faulted line.
		c. Wait 20 cycles, and then re-close the line in (b) back into the fault.
		d. Leave fault on for 5 cycles, then trip the line in (b) and remove fault.
15	FLT15-1PH	*Single phase fault and sequence like previous*

Table 2-3 (Continued)
Case List with Contingency Description

Ref. No.	Case Name	Description
16	FLT16-3PH	3 phase fault on the Northwest (514880) to Spring Creek (514881) 345 kV Line, near Northwest.
		a. Apply fault at the Northwest 345 kV bus.
		b. Clear fault after 5 cycles by tripping the faulted line.
		c. Wait 20 cycles, and then re-close the line in (b) back into the fault.
		d. Leave fault on for 5 cycles, then trip the line in (b) and remove fault.
17	FLT17-1PH	*Single phase fault and sequence like previous*
18	FLT18-3PH	3 phase fault on the Northwest (514880) to Cimarron (514901) 345 kV Line, near Northwest.
		a. Apply fault at the Northwest 345 kV bus.
		b. Clear fault after 5 cycles by tripping the faulted line.
		c. Wait 20 cycles, and then re-close the line in (b) back into the fault.
		d. Leave fault on for 5 cycles, then trip the line in (b) and remove fault.
19	FLT19-1PH	*Single phase fault and sequence like previous*
20	FLT20-3PH	3 phase fault on the Northwest 345 kV (514880) to 138 kV (514879)/13.8 kV (515742) XFMR, near the 345 kV bus.
		a. Apply fault at the Northwest 345 kV bus.
		b. Clear fault after 5 cycles by tripping the faulted line.
21	FLT21-3PH	3 phase fault on the Arcadia (514908) to Northwest (514880) 345 kV Line, near Arcadia.
		a. Apply fault at the Arcadia 345 kV bus.
		b. Clear fault after 5 cycles by tripping the faulted line.
		c. Wait 20 cycles, and then re-close the line in (b) back into the fault.
		d. Leave fault on for 5 cycles, then trip the line in (b) and remove fault.
22	FLT22-1PH	*Single phase fault and sequence like previous*
23	FLT23-3PH	3 phase fault on the Woodward EHV (515376) to Iodine (514796) 138 kV line, near Woodward EHV.
		a. Apply fault at the Woodward EHV 138 kV bus.
		b. Clear fault after 5 cycles by tripping the faulted line.
		c. Wait 20 cycles, and then re-close the line in (b) back into the fault.
		d. Leave fault on for 5 cycles, then trip the line in (b) and remove fault.
24	FLT24-1PH	*Single phase fault and sequence like previous*
25	FLT25-3PH	3 phase fault on the Mathewson (560368) to Woodring (514715) 345 kV line, near Woodring.
		a. Apply fault at the Woodring 345 kV bus.
		b. Clear fault after 5 cycles by tripping the faulted line.
		c. Wait 20 cycles, and then re-close the line in (b) back into the fault.
		d. Leave fault on for 5 cycles, then trip the line in (b) and remove fault.
26	FLT26-1PH	*Single phase fault and sequence like previous*
27	FLT27-3PH	3 phase fault on the Mathewson (560368) to Cimarron (514901) 345 kV line, near Cimarron.
		a. Apply fault at the Cimarron 345 kV bus.
		b. Clear fault after 5 cycles by tripping the faulted line.
		c. Wait 20 cycles, and then re-close the line in (b) back into the fault.
		d. Leave fault on for 5 cycles, then trip the line in (b) and remove fault.
28	FLT28-1PH	*Single phase fault and sequence like previous*
29	FLT29-3PH	3 phase fault on the Cimarron (514901) to Minco (514801) 345 kV line, near Cimarron.
		a. Apply fault at the Cimarron 345 kV bus.
		b. Clear fault after 5 cycles by tripping the faulted line.
		c. Wait 20 cycles, and then re-close the line in (b) back into the fault.
		d. Leave fault on for 5 cycles, then trip the line in (b) and remove fault.
30	FLT30-1PH	*Single phase fault and sequence like previous*

Table 2-3 (Continued)
Case List with Contingency Description

Ref. No.	Case Name	Description
31	FLT31-3PH	3 phase fault on the Cimarron (514901) to Draper (514934) 345 kV line, near Cimarron. a. Apply fault at the Cimarron 345 kV bus. b. Clear fault after 5 cycles by tripping the faulted line. c. Wait 20 cycles, and then re-close the line in (b) back into the fault. d. Leave fault on for 5 cycles, then trip the line in (b) and remove fault.
32	FLT32-1PH	*Single phase fault and sequence like previous*
33	FLT33-3PH	3 phase fault on the Minco (514801) to Gracemont (515800) 345 kV line, near Minco. a. Apply fault at the Minco 345 kV bus. b. Clear fault after 5 cycles by tripping the faulted line. c. Wait 20 cycles, and then re-close the line in (b) back into the fault. d. Leave fault on for 5 cycles, then trip the line in (b) and remove fault.
34	FLT34-1PH	*Single phase fault and sequence like previous*
35	FLT35-3PH	3 phase fault on the Draper (514934) to Seminole (515045) 345 kV line Ckt. 2, near Draper. a. Apply fault at the Draper 345 kV bus. b. Clear fault after 5 cycles by tripping the faulted line. c. Wait 20 cycles, and then re-close the line in (b) back into the fault. d. Leave fault on for 5 cycles, then trip the line in (b) and remove fault.
36	FLT36-1PH	*Single phase fault and sequence like previous*
37	FLT37-3PH	3 phase fault on the Woodward (515376) to Wodoward (514785) 138 kV line, near Woodward (515376). a. Apply fault at the Woodward (515376) 138 kV bus. b. Clear fault after 5 cycles by tripping the faulted line. c. Wait 20 cycles, and then re-close the line in (b) back into the fault. d. Leave fault on for 5 cycles, then trip the line in (b) and remove fault.
38	FLT38-1PH	*Single phase fault and sequence like previous*
39	FLT39-3PH	3 phase fault on the Cimarron (514898) to Tuttle Conoco Tap (511425) 138 kV line, near Cimarron. a. Apply fault at the Cimarron 138 kV bus. b. Clear fault after 5 cycles by tripping the faulted line. c. Wait 20 cycles, and then re-close the line in (b) back into the fault. d. Leave fault on for 5 cycles, then trip the line in (b) and remove fault.
40	FLT40-1PH	*Single phase fault and sequence like previous*
41	FLT41-3PH	3 phase fault on the Cimarron (514898) to El Reno (514819) 138 kV line, near Cimarron. a. Apply fault at the Cimarron 138 kV bus. b. Clear fault after 5 cycles by tripping the faulted line. c. Wait 20 cycles, and then re-close the line in (b) back into the fault. d. Leave fault on for 5 cycles, then trip the line in (b) and remove fault.
42	FLT42-1PH	*Single phase fault and sequence like previous*
43	FLT43-3PH	3 phase fault on the Cimarron (514901) 345 kV to Cimarron (514898) 138 kV/(515714) 13.8 kV XFMR, near the 345 kV bus. a. Apply fault at the Cimarron 345 kV bus. b. Clear fault after 5 cycles by tripping the faulted line.
44	FLT44-3PH	3 phase fault on the Cimarron (514898) to Jensen Tap (514820) 138 kV line, near Cimarron. a. Apply fault at the Cimarron 138 kV bus. b. Clear fault after 5 cycles by tripping the faulted line. c. Wait 20 cycles, and then re-close the line in (b) back into the fault. d. Leave fault on for 5 cycles, then trip the line in (b) and remove fault.
45	FLT45-1PH	*Single phase fault and sequence like previous*

Table 2-3 (Continued)
Case List with Contingency Description

Ref. No.	Case Name	Description
46	FLT46-3PH	3 phase fault on the Mathewson (560368) to Northwest (514880) 345 kV line, near Northwest.
		a. Apply fault at the Northwest 345 kV bus.
		b. Clear fault after 5 cycles by tripping the faulted line.
		c. Wait 20 cycles, and then re-close the line in (b) back into the fault.
		d. Leave fault on for 5 cycles, then trip the line in (b) and remove fault.
47	FLT47-1PH	*Single phase fault and sequence like previous*
48	FLT48-3PH	3 phase fault on the Cimarron (514898) to Haymaker 514863) 138 kV line, near Cimarron.
		a. Apply fault at the Cimarron 138 kV bus.
		b. Clear fault after 5 cycles by tripping the faulted line.
		c. Wait 20 cycles, and then re-close the line in (b) back into the fault.
		d. Leave fault on for 5 cycles, then trip the line in (b) and remove fault.
49	FLT49-1PH	*Single phase fault and sequence like previous*
50	FLT50-3PH	3 phase fault on the Cimarron (514898) to Czech Hall (514894) 138 kV line, near Cimarron.
		a. Apply fault at the Cimarron 138 kV bus.
		b. Clear fault after 5 cycles by tripping the faulted line.
		c. Wait 20 cycles, and then re-close the line in (b) back into the fault.
		d. Leave fault on for 5 cycles, then trip the line in (b) and remove fault.
51	FLT51-1PH	*Single phase fault and sequence like previous*
52	FLT52-3PH	3 phase fault on the Cimarron (514898) to Sara (514895) 138 kV line, near Cimarron.
		a. Apply fault at the Cimarron 138 kV bus.
		b. Clear fault after 5 cycles by tripping the faulted line.
		c. Wait 20 cycles, and then re-close the line in (b) back into the fault.
		d. Leave fault on for 5 cycles, then trip the line in (b) and remove fault.
53	FLT53-1PH	*Single phase fault and sequence like previous*
54	FLT54-3PH	3 phase double circuit fault on the Woodward (515375) to Beaver County (580500) 345 kV lines, near Woodward.
		a. Apply fault at the Woodward 345 kV bus.
		b. Clear fault after 5 cycles by tripping the faulted line.
		c. Wait 20 cycles, and then re-close the line in (b) back into the fault.
		d. Leave fault on for 5 cycles, then trip the line in (b) and remove fault.
55	FLT55-3PH	3 phase double circuit fault on the Woodward (515375) to Thistle (539801) 345 kV lines, near Woodward.
		a. Apply fault at the Woodward 345 kV bus.
		b. Clear fault after 5 cycles by tripping the faulted line.
		c. Wait 20 cycles, and then re-close the line in (b) back into the fault.
		d. Leave fault on for 5 cycles, then trip the line in (b) and remove fault.

SECTION 3: POWER FACTOR ANALYSIS

The objective of this task is to quantify the power factor at the point of interconnection for the wind farms during base case and system contingencies. SPP transmission planning practice requires interconnecting generation projects to maintain the power factor (pf) at the Point of Interconnection (POI) near unity for system intact conditions and within +/- 0.95 pf for post-contingency conditions. This is analyzed by having the wind farm maintain a prescribed voltage schedule at the point of interconnection of 1.0 p.u. voltage, or if the pre-project voltage is higher than 1.0 p.u., to maintain the pre-project voltage schedule. The results shown for both projects for the Power Factor Analysis include the additional Woodward to Tatonga 345 kV line.

3.1 Study Project – GEN-2011-051

Approach

Both winter peak and summer peak power flows provided by SPP were examined prior to the Power Factor Analysis to ensure they contained the proposed study project modeled at 100% of the nameplate rating and any previously queued projects listed in Table 2-2. There was no suspect power flow data in the study area. The proposed study project was turned off during the power factor analysis. The wind farm was then replaced by a generator modeled at the high side bus with the same real power (MW) capability as the wind farm and open limits for the reactive power set points (Mvar). The generator was set to hold the POI scheduled bus voltage. Contingencies from the three-phase fault definitions provided in Table 2-3 were then applied and the reactive power required to maintain the bus voltage was recorded.

The study project (GEN-2011-051) was disabled and a generator was placed at the study project's high side bus. The generator was modeled with PGEN = 104.4 MW, QMin = -9999 Mvar, and QMax = 9999 Mvar. All buses and transformers connected from the study project's high side bus to the GEN-2011-051 wind generators were disabled. The pre-project voltage at the POI (Tap on the Woodward to Tatonga 345 kV line - Bus 562075) for the summer peak conditions is 0.9665 p.u. and for the winter peak conditions is 1.0039 p.u.. Therefore, the scheduled voltage for the POI was set to 1.0 p.u. for summer peak conditions and 1.0039 p.u. for winter peak conditions.

Results

The power factor was calculated for summer and winter peak conditions. Table 3.1-1 shows the power factor results for GEN-2011-051 (104.4 MW). Note that a positive Q (Mvar) output illustrates that the generator is absorbing reactive power from the system, implying a leading power factor; a negative Q (Mvar) illustrates that the generator is supplying reactive power to the system, implying a lagging power factor.

Table 3.1-1
Power Factor Analysis: GEN-2011-051 (P_{GEN} = 104.4 MW)

Ref. No.	Summer Peak			Winter Peak		
	Power Factor		Q** (MVAR)	Power Factor		Q** (MVAR)
Base	0.9656	Leading	28.105	0.8712	Leading	58.830
C1	0.9995	Lagging	-3.279	0.9316	Leading	40.731
C3	0.9864	Leading	17.388	0.9380	Leading	38.585
C5	0.9849	Lagging	-18.342	0.9889	Leading	15.660
C7	0.9215	Lagging	-44.006	0.9745	Lagging	-24.038
C9	0.9649	Leading	28.412	0.8649	Leading	60.581
C10	0.9228	Lagging	-43.587	0.9383	Lagging	-38.487
C12	0.7993	Leading	78.503	0.6931	Leading	108.587
C14	0.9035	Lagging	-49.512	0.9679	Lagging	-27.103
C16	0.9906	Leading	14.454	0.9000	Leading	50.572
C18	0.9697	Leading	26.280	0.8793	Leading	56.554
C20	0.9622	Leading	29.559	0.8656	Leading	60.397
C21	0.9894	Leading	15.307	0.9304	Leading	41.141
C23	0.9744	Leading	24.089	0.8877	Leading	54.143
C25	0.9794	Leading	21.529	0.9123	Leading	46.871
C27	0.9696	Leading	26.330	0.8772	Leading	57.156
C29	0.9857	Leading	17.855	0.9072	Leading	48.407
C31	0.9849	Leading	18.381	0.9065	Leading	48.630
C33	0.9610	Leading	30.055	0.8572	Leading	62.711
C35	0.9718	Leading	25.340	0.8779	Leading	56.953
C37	0.9666	Leading	27.693	0.8737	Leading	58.134
C39	0.9617	Leading	29.743	0.8670	Leading	59.995
C41	0.9716	Leading	25.431	0.8845	Leading	55.068
C43	0.9596	Leading	30.593	0.8601	Leading	61.907
C44	0.9677	Leading	27.182	0.8768	Leading	57.242
C46	0.9791	Leading	21.706	0.8937	Leading	52.399
C48	0.9702	Leading	26.080	0.8783	Leading	56.832
C50	0.9705	Leading	25.953	0.8757	Leading	57.559
C52	0.9672	Leading	27.438	0.8756	Leading	57.588
C54	0.7983	Lagging	-78.771	0.9351	Lagging	-39.581
C55	0.5479	Lagging	-159.403	0.5409	Lagging	-162.344

*The scheduled voltage for the POI (G11_051 Tap) was 1.00 p.u. for summer and 1.0039 p.u. for winter peak conditions

**A positive Q (Mvar) output illustrates the generator is absorbing Mvars from the system, which implies a leading power factor; negative Q (Mvar) output shows the generator is supplying Mvars to the system implying a lagging power factor.

Summary

The Power Factor Analysis shows that GEN-2011-051 has a power factor range of 0.5409 lagging (supplying) to 0.6931 leading (absorbing).

3.2 Study Project – GEN-2011-054

Approach

Both winter peak and summer peak power flows provided by SPP were examined prior to the Power Factor Analysis to ensure they contained the proposed study project modeled at 100% of the nameplate rating and any previously queued projects listed in Table 2-2. There was no suspect power flow data in the study area. The proposed study project at the point of interconnection was turned off during the power factor analysis. The wind farm was then replaced by a generator modeled at the wind farm's high voltage bus with the same real power (MW) capability as the wind farm and open limits for the reactive power set points (Mvar). The generator was set to hold the POI scheduled bus voltage. Contingencies from the three-phase fault definitions provided in Table 2-3 were then applied and the reactive power required to maintain the bus voltage was recorded.

The study project (GEN-2011-054) and one previous queued project (GEN-2010-040) share the same POI (Cimarron 345 kV bus – 514901). These projects were disabled and two generators were placed at the study project's high side bus, one was modeled with PGEN = 299 MW (GEN-2011-054), QMin = -9999 Mvar, and QMax = 9999 Mvar and the other generator was modeled with PGEN = 300 MW (GEN-2010-040), QMin = -9999 Mvar, and QMax = 9999 Mvar. All buses and transformers connected from the study project's high side bus to the corresponding generators were disabled. The pre-project voltage at the POI (Cimarron 345 kV bus – 514901) for the summer peak conditions is 0.9853 p.u. and for the winter peak conditions is 0.9797 p.u.. Therefore, the scheduled voltage for the POI was set to 1.00 p.u. for summer and winter peak conditions.

Results

The power factor was calculated for summer and winter peak conditions. Table 3.2-1 shows the power factor results for GEN-2011-054 (299 MW). Note that a positive Q (Mvar) output illustrates that the generator is absorbing reactive power from the system, implying a leading power factor; a negative Q (Mvar) illustrates that the generator is supplying reactive power to the system, implying a lagging power factor.

Table 3.2-1
Power Factor Analysis: GEN-2011-054 (P_{GEN} = 299 MW)

Ref. No.	Summer Peak			Winter Peak		
	Power Factor		Q** (MVAR)	Power Factor		Q** (MVAR)
Base	0.8088	Lagging	-217.414	0.7415	Lagging	-270.551
C1	0.7979	Lagging	-225.897	0.7374	Lagging	-273.879
C3	0.8132	Lagging	-213.988	0.7469	Lagging	-266.206
C5	0.7940	Lagging	-228.899	0.7301	Lagging	-279.869
C7	0.7457	Lagging	-267.161	0.6779	Lagging	-324.227
C9	0.8097	Lagging	-216.743	0.7430	Lagging	-269.313
C10	0.8099	Lagging	-216.566	0.7450	Lagging	-267.753
C12	0.8125	Lagging	-214.522	0.7450	Lagging	-267.727
C14	0.7328	Lagging	-277.621	0.6466	Lagging	-352.775
C16	0.7391	Lagging	-272.480	0.7104	Lagging	-296.196
C18	0.8249	Lagging	-204.892	0.7683	Lagging	-249.127
C20	0.8033	Lagging	-221.709	0.7398	Lagging	-271.941
C21	0.7744	Lagging	-244.255	0.6975	Lagging	-307.214
C23	0.8081	Lagging	-217.911	0.7406	Lagging	-271.310
C25	0.7656	Lagging	-251.249	0.6937	Lagging	-310.444
C27	0.8181	Lagging	-210.144	0.7526	Lagging	-261.583
C29	0.7862	Lagging	-235.004	0.7273	Lagging	-282.183
C31	0.7762	Lagging	-242.880	0.7146	Lagging	-292.682
C33	0.7814	Lagging	-238.785	0.7200	Lagging	-288.216
C35	0.7925	Lagging	-230.079	0.7269	Lagging	-282.504
C37	0.8088	Lagging	-217.423	0.7415	Lagging	-270.524
C39	0.8209	Lagging	-207.977	0.7487	Lagging	-264.705
C41	0.8123	Lagging	-214.674	0.7421	Lagging	-270.069
C43	0.8292	Lagging	-201.545	0.7683	Lagging	-249.093
C44	0.8129	Lagging	-214.194	0.7434	Lagging	-269.017
C46	0.7337	Lagging	-276.893	0.6579	Lagging	-342.257
C48	0.8065	Lagging	-219.155	0.7402	Lagging	-271.597
C50	0.8072	Lagging	-218.620	0.7542	Lagging	-260.348
C52	0.8117	Lagging	-215.136	0.7419	Lagging	-270.263
C54	0.7721	Lagging	-246.128	0.7140	Lagging	-293.164
C55	0.6037	Lagging	-394.846	0.5485	Lagging	-455.757

*The scheduled voltage for the POI (Cimarron 345 kV) was 1.00 p.u. for summer and winter peak conditions

**A positive Q (Mvar) output illustrates the generator is absorbing Mvars from the system, which implies a leading power factor; negative Q (Mvar) output shows the generator is supplying Mvars to the system implying a lagging power factor.

Summary

The Power Factor Analysis shows that GEN-2011-054 has a power factor range of 0.5485 to 0.8292 lagging (supplying).

3.3 Overall Summary

With the additional Woodward to Tatonga 345 kV line, the Power Factor Analysis shows that GEN-2011-051 has a power factor range of 0.5409 lagging (supplying) to 0.6931 leading (absorbing) and GEN-2011-054 has a power factor range of 0.5485 to 0.8292 lagging (supplying).

Without the additional Woodward to Tatonga 345 kV line, GEN-2011-051 has a power factor range of 0.3258 lagging (supplying) to 0.8316 leading (absorbing) and GEN-2011-054 has a power factor range of 0.5689 to 0.9390 lagging (supplying).

SECTION 4: STABILITY ANALYSIS

The objective of the stability analysis was to determine the impacts of the new wind farms on the stability and voltage recovery on the SPP transmission system. If problems with stability or voltage recovery were identified the need for reactive compensation or system upgrades were investigated.

Approach

Both winter peak and summer peak power flows provided by SPP were examined prior to the Stability Analysis to ensure they contained the proposed study projects (GEN-2011-051 and GEN-2011-054) modeled at 100% of the nameplate rating and any previously queued projects listed in Table 2-2. There was no suspect power flow data in the study area. The dynamic datasets were also verified and stable initial system conditions (i.e., “flat lines”) were achieved. Three-phase and single line-to-ground faults listed in Table 2-3 were examined. Single-phase fault impedances were calculated to result in a voltage of approximately 60% of the pre-fault voltage. Refer to Table 4-1 for a list of the calculated single-phase fault impedances used for this analysis.

Table 4-1
Calculated Single-Phase Fault Impedances

Ref. No.	Casename	Single-Phase Fault Impedance (MVA)	
		Summer Peak	Winter Peak
1	FLT02-1PH	-8906.3	-8906.3
2	FLT04-1PH	-8906.3	-8906.3
3	FLT06-1PH	-8906.3	-8906.3
4	FLT08-1PH	-8906.3	-8906.3
5	FLT11-1PH	-5250.0	-5250.0
6	FLT13-1PH	-5250.0	-5250.0
7	FLT15-1PH	-5250.0	-5250.0
8	FLT17-1PH	-10937.5	-9312.5
9	FLT19-1PH	-10937.5	-9312.5
10	FLT22-1PH	-9312.5	-8500.0
11	FLT24-1PH	-4843.8	-5046.9
12	FLT26-1PH	-6062.5	-6062.5
13	FLT28-1PH	-10937.5	-9312.5
14	FLT30-1PH	-10937.5	-9312.5
15	FLT32-1PH	-10937.5	-9312.5
16	FLT34-1PH	-5250.0	-5250.0
17	FLT36-1PH	-7687.5	-6875.0
18	FLT38-1PH	-4843.8	-5046.9
19	FLT40-1PH	-6468.8	-5656.3
20	FLT42-1PH	-6468.8	-5656.3
21	FLT45-1PH	-6468.8	-5656.3
22	FLT47-1PH	-10937.5	-9312.5
23	FLT49-1PH	-6468.8	-5656.3
24	FLT51-1PH	-6468.8	-5656.3
25	FLT53-1PH	-6468.8	-5656.3

Bus voltages and previously queued generation in the study area were monitored in addition to the bus voltages in the following areas:

- 520 AEPW
- 524 OKGE
- 525 WFEC
- 526 SPS
- 531 MIDW
- 534 SUNC

- 536 WERE

The results of the analysis determined if reactive compensation or system upgrades were required to obtain acceptable system performance. If additional reactive compensation was required, the size, type, and location were determined. The proposed reactive reinforcements would ensure the wind farm meets FERC Order 661A low voltage requirements and return the wind farm to its pre-disturbance operating voltage. If the results indicated the need for fast responding reactive support, dynamic support such as an SVC or STATCOM was investigated. If tripping of the prior queued projects was observed during the stability analysis (for under/over voltage or under/over frequency) the simulations were re-ran with the prior queued project's voltage and frequency tripping disabled. If stability problems were identified, the maximum acceptable generation level for the GEN-2011-051 and GEN-2011-054 to operate without causing any stability problems were quantified.

Results

Refer to Table 4-2 for a summary of the Stability Analysis results for the cases listed in Table 2-3. The initial simulations were run for summer and winter peak conditions. There were four faults that initially caused the system to diverge and system instability occurred during winter peak conditions. The four faults are as follows:

- Fault 10: 3 phase fault on the GEN-2011-051 Tap to Woodward 345 kV line
- Fault 12: 3 phase fault on the GEN-2011-051 Tap to Tatonga 345 kV line
- Fault 14: 3 phase fault on the Tatonga to Mathewson 345 kV line, Circuit 1
- Fault 21: 3 phase fault on the Arcadia to Northwest 345 kV line

After discussion with SPP, it was determined that adding a line from the Woodward 345 kV bus to the Tatonga 345 kV bus (Option A, referred to as "-A" in Table 4-2) would be the most appropriate solution. After implementing this solution, adding a line from Woodward 345 kV to Tatonga 345 kV, the four cases converged; system stability and acceptable voltages were achieved. Figure 4-1 and Figure 4-2 shows the response of the GEN-2011-051 wind farm and GEN-2011-054 (Gen 1) wind farm, respectively, during a three-phase double circuit fault on the Woodward to Beaver County 345 kV lines (FLT55-3PH) during summer peak conditions. Figure 4-3 shows selected bus voltages in the study area during FLT55-3PH which is a representative case for the "most severe" voltage dip for summer peak conditions. Figure 4-4 and Figure 4-5 shows the response of the GEN-2011-051 wind farm and GEN-2011-054 (Gen 1) wind farm, respectively, during a three-phase double circuit fault on the Woodward to Beaver County 345 kV lines (FLT55-3PH) during winter peak conditions. Figure 4-6 shows selected bus voltages in the study area during FLT55-3PH which is a representative case for the "most severe" voltage dip for winter peak conditions.

Table 4-2
Stability Analysis Summary of Results

Ref. No.	Casename	Summer		Winter	
		Stable?	Acceptable Voltages?	Stable?	Acceptable Voltages?
1	FLT01-3PH	Stable	Yes	Stable	Yes
2	FLT02-1PH	Stable	Yes	Stable	Yes
3	FLT03-3PH	Stable	Yes	Stable	Yes
4	FLT04-1PH	Stable	Yes	Stable	Yes
5	FLT05-3PH	Stable	Yes	Stable	Yes
6	FLT06-1PH	Stable	Yes	Stable	Yes
7	FLT07-3PH	Stable	Yes	Stable	Yes
8	FLT08-1PH	Stable	Yes	Stable	Yes
9	FLT09-3PH	Stable	Yes	Stable	Yes
10	FLT10-3PH	Stable	Yes	**Unstable**	**No**
10-A	FLT10-3PH	Stable	Yes	Stable	Yes
11	FLT11-1PH	Stable	Yes	Stable	Yes
12	FLT12-3PH	Stable	Yes	**Unstable**	**No**
12-A	FLT12-3PH	Stable	Yes	Stable	Yes
13	FLT13-1PH	Stable	Yes	Stable	Yes
14	FLT14-3PH	Stable	Yes	**Unstable**	**No**
14-A	FLT14-3PH	Stable	Yes	Stable	Yes
15	FLT15-1PH	Stable	Yes	Stable	Yes
16	FLT16-3PH	Stable	Yes	Stable	Yes
17	FLT17-1PH	Stable	Yes	Stable	Yes
18	FLT18-3PH	Stable	Yes	Stable	Yes
19	FLT19-1PH	Stable	Yes	Stable	Yes
20	FLT20-3PH	Stable	Yes	Stable	Yes
21	FLT21-3PH	Stable	Yes	**Unstable**	**No**
21-A	FLT21-3PH	Stable	Yes	Stable	Yes
22	FLT22-1PH	Stable	Yes	Stable	Yes
23	FLT23-3PH	Stable	Yes	Stable	Yes
24	FLT24-1PH	Stable	Yes	Stable	Yes
25	FLT25-3PH	Stable	Yes	Stable	Yes
26	FLT26-1PH	Stable	Yes	Stable	Yes
27	FLT27-3PH	Stable	Yes	Stable	Yes

Table 4-2 (Continued)
Stability Analysis Summary of Results

Ref. No.	Casename	Summer		Winter	
		Stable?	Acceptable Voltages?	Stable?	Acceptable Voltages?
28	FLT28-1PH	Stable	Yes	Stable	Yes
29	FLT29-3PH	Stable	Yes	Stable	Yes
30	FLT30-1PH	Stable	Yes	Stable	Yes
31	FLT31-3PH	Stable	Yes	Stable	Yes
32	FLT32-1PH	Stable	Yes	Stable	Yes
33	FLT33-3PH	Stable	Yes	Stable	Yes
34	FLT34-1PH	Stable	Yes	Stable	Yes
35	FLT35-3PH	Stable	Yes	Stable	Yes
36	FLT36-1PH	Stable	Yes	Stable	Yes
37	FLT37-3PH	Stable	Yes	Stable	Yes
38	FLT38-1PH	Stable	Yes	Stable	Yes
39	FLT39-3PH	Stable	Yes	Stable	Yes
40	FLT40-1PH	Stable	Yes	Stable	Yes
41	FLT41-3PH	Stable	Yes	Stable	Yes
42	FLT42-1PH	Stable	Yes	Stable	Yes
43	FLT43-3PH	Stable	Yes	Stable	Yes
44	FLT44-3PH	Stable	Yes	Stable	Yes
45	FLT45-1PH	Stable	Yes	Stable	Yes
46	FLT46-3PH	Stable	Yes	Stable	Yes
47	FLT47-1PH	Stable	Yes	Stable	Yes
48	FLT48-3PH	Stable	Yes	Stable	Yes
49	FLT49-1PH	Stable	Yes	Stable	Yes
50	FLT50-3PH	Stable	Yes	Stable	Yes
51	FLT51-1PH	Stable	Yes	Stable	Yes
52	FLT52-3PH	Stable	Yes	Stable	Yes
53	FLT53-1PH	Stable	Yes	Stable	Yes
54	FLT54-3PH	Stable	Yes	Stable	Yes
55	FLT55-3PH	Stable	Yes	Stable	Yes

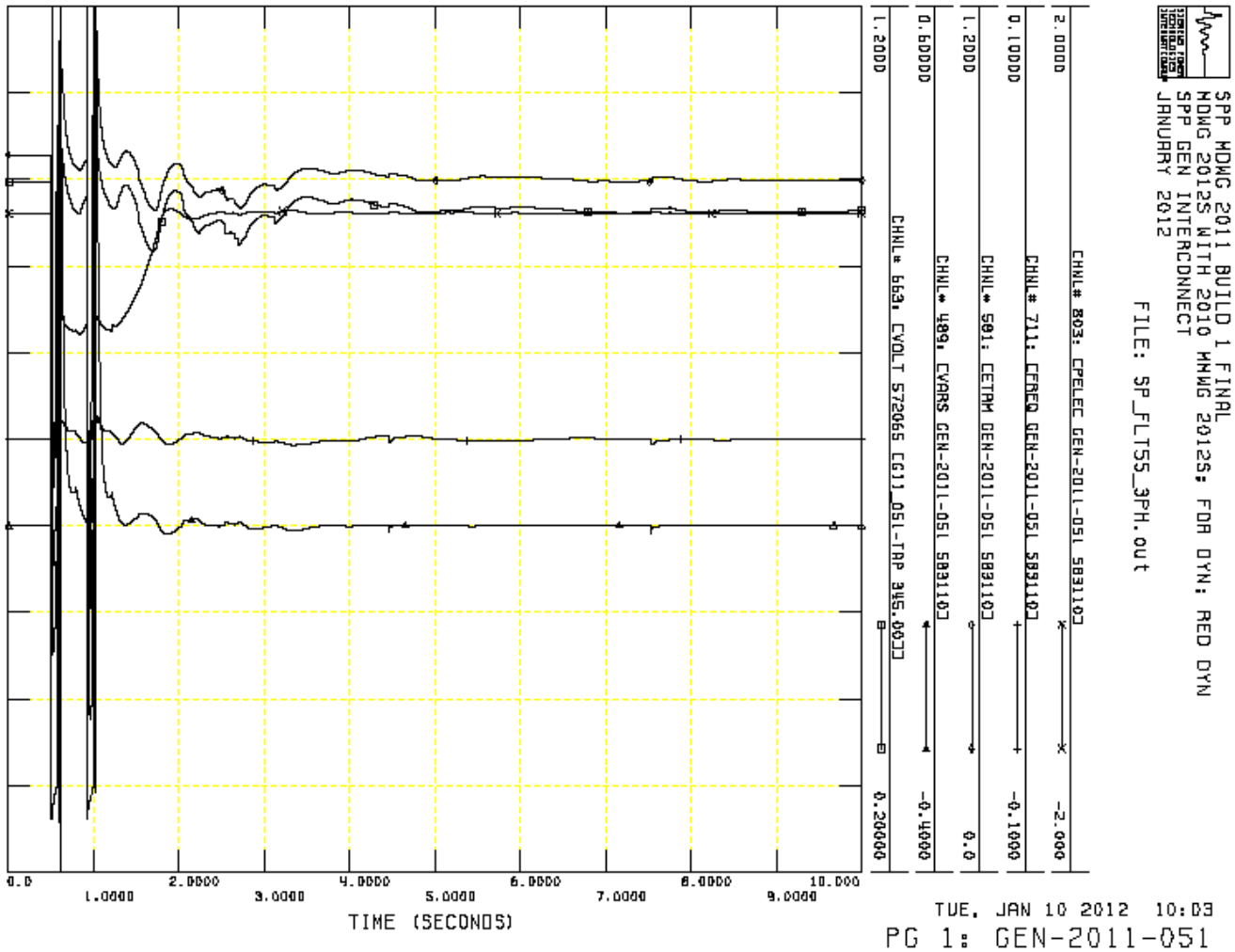

Figure 4-1. Response of GEN-2011-051 project during case FLT55-3PH for summer peak conditions.

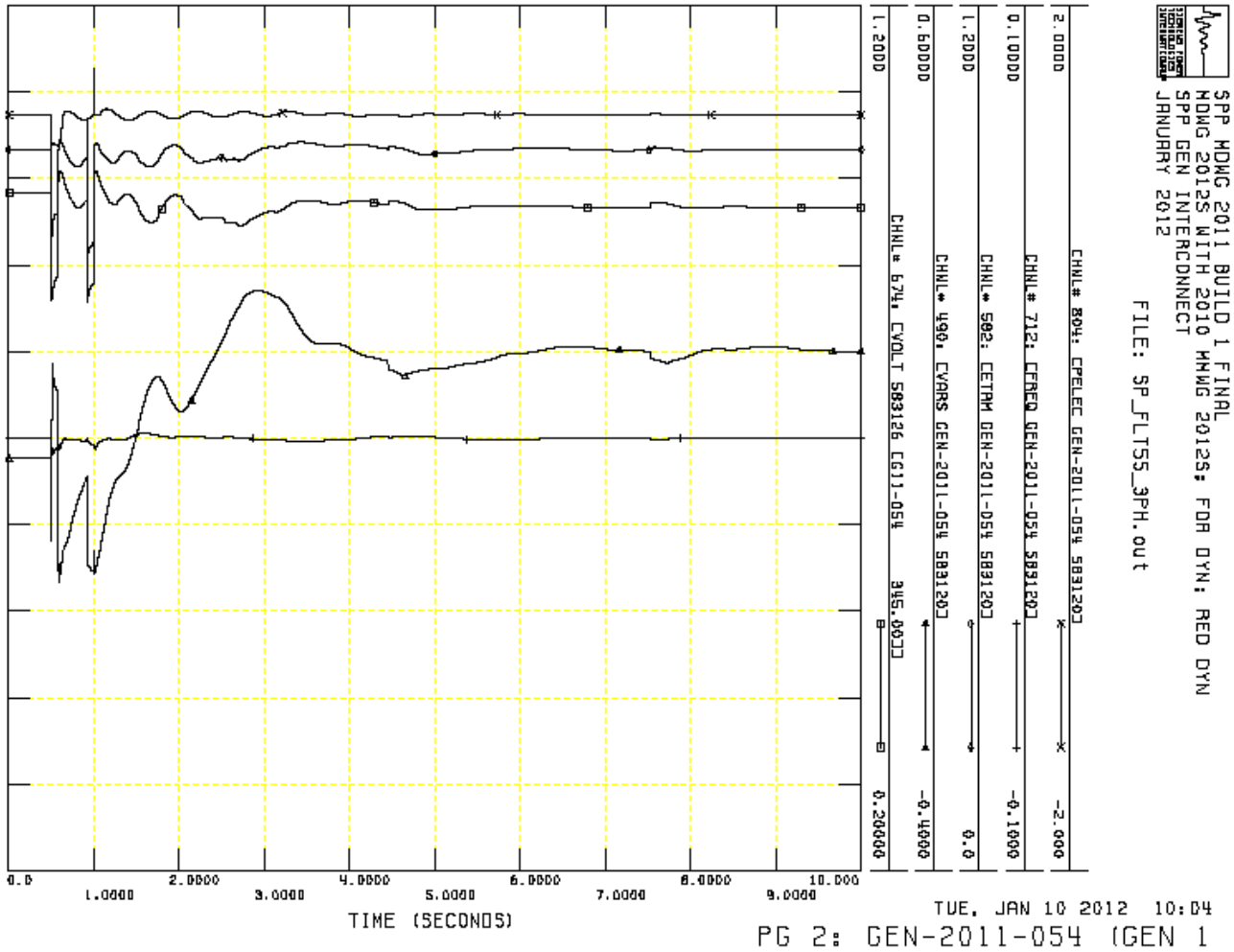

Figure 4-2. Response of GEN-2011-054 (Gen 1) project during case FLT55-3PH for summer peak conditions.

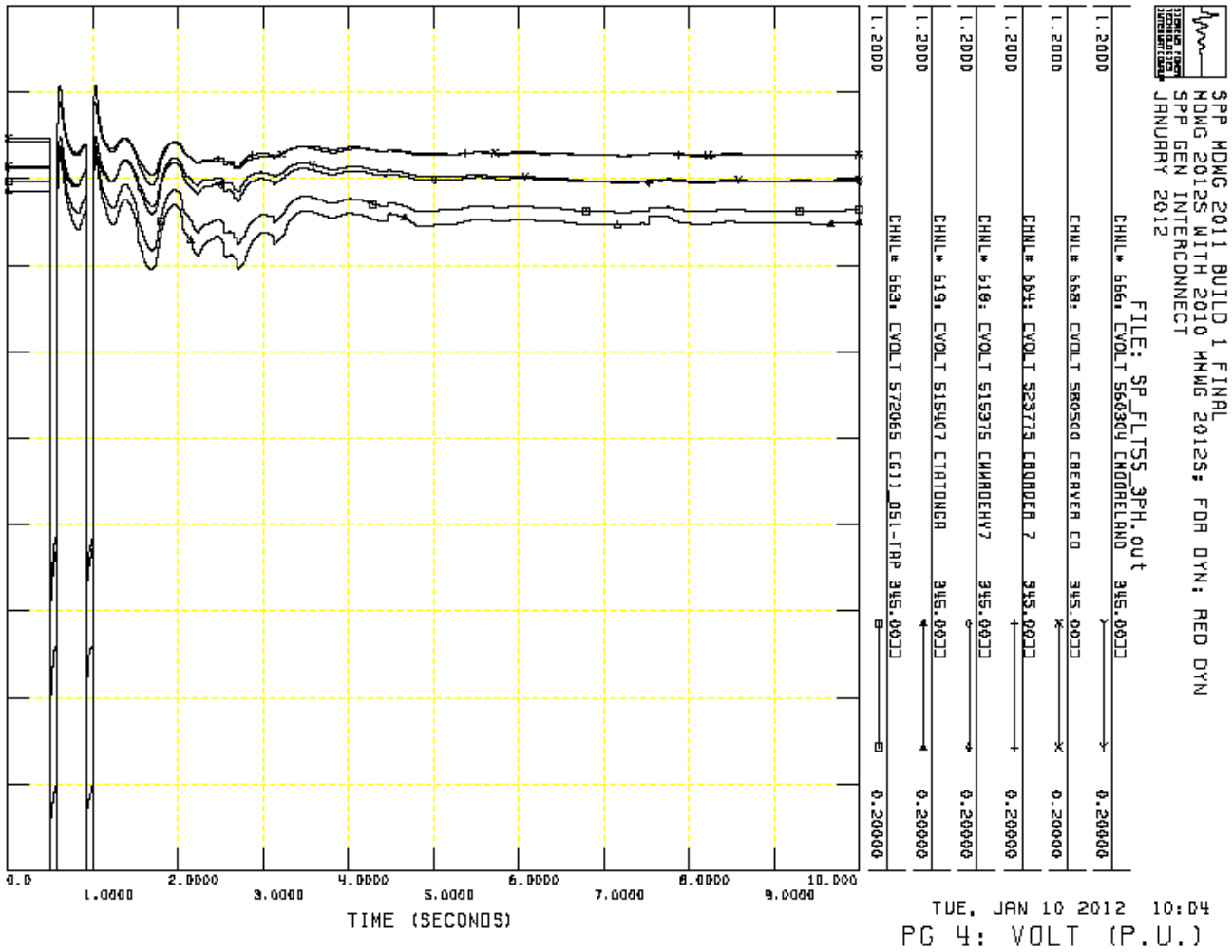

Figure 4-3. Response of selected area bus voltages for case FLT55-3PH for summer peak conditions.

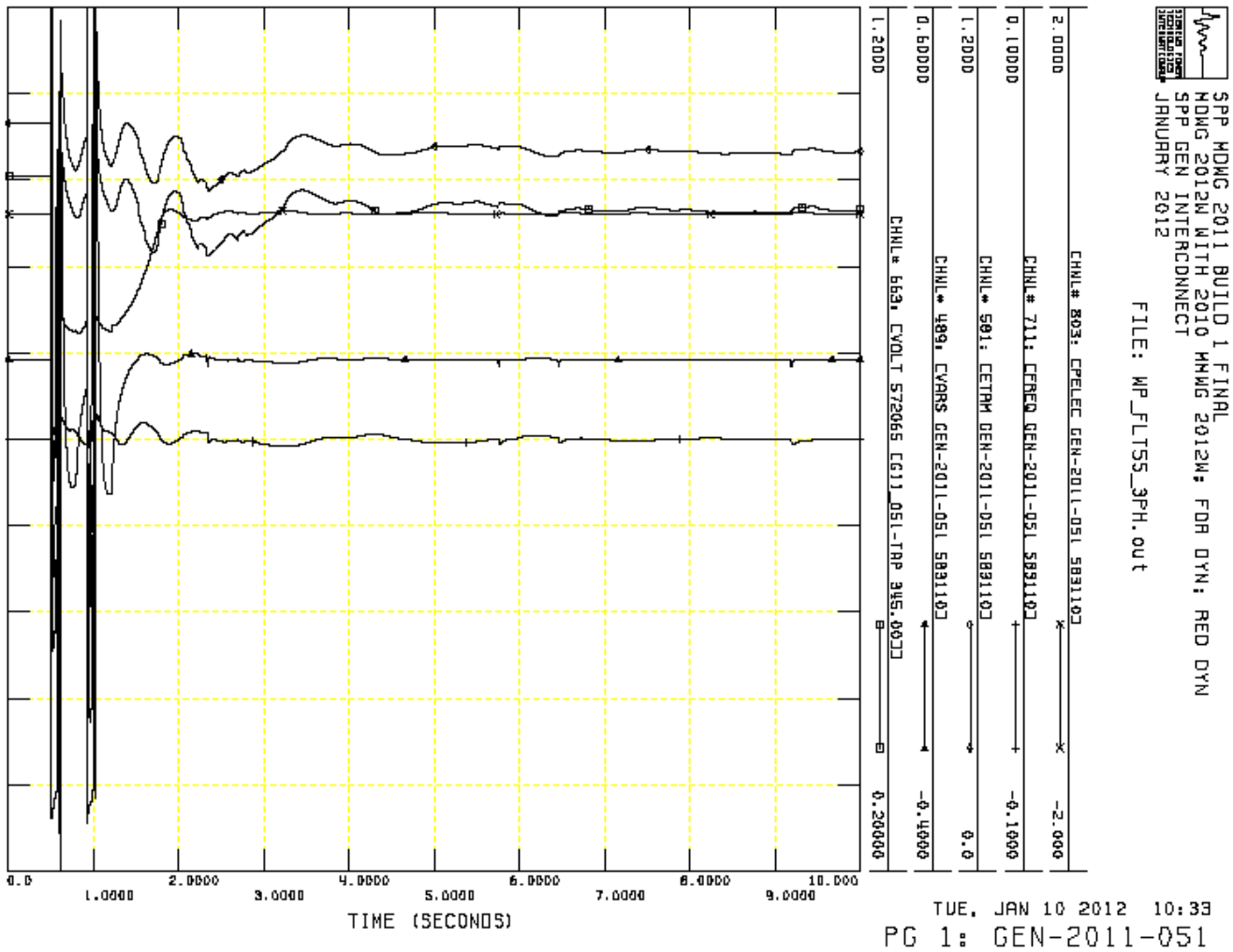

Figure 4-4. Response of GEN-2011-051 project during case FLT55-3PH for winter peak conditions.

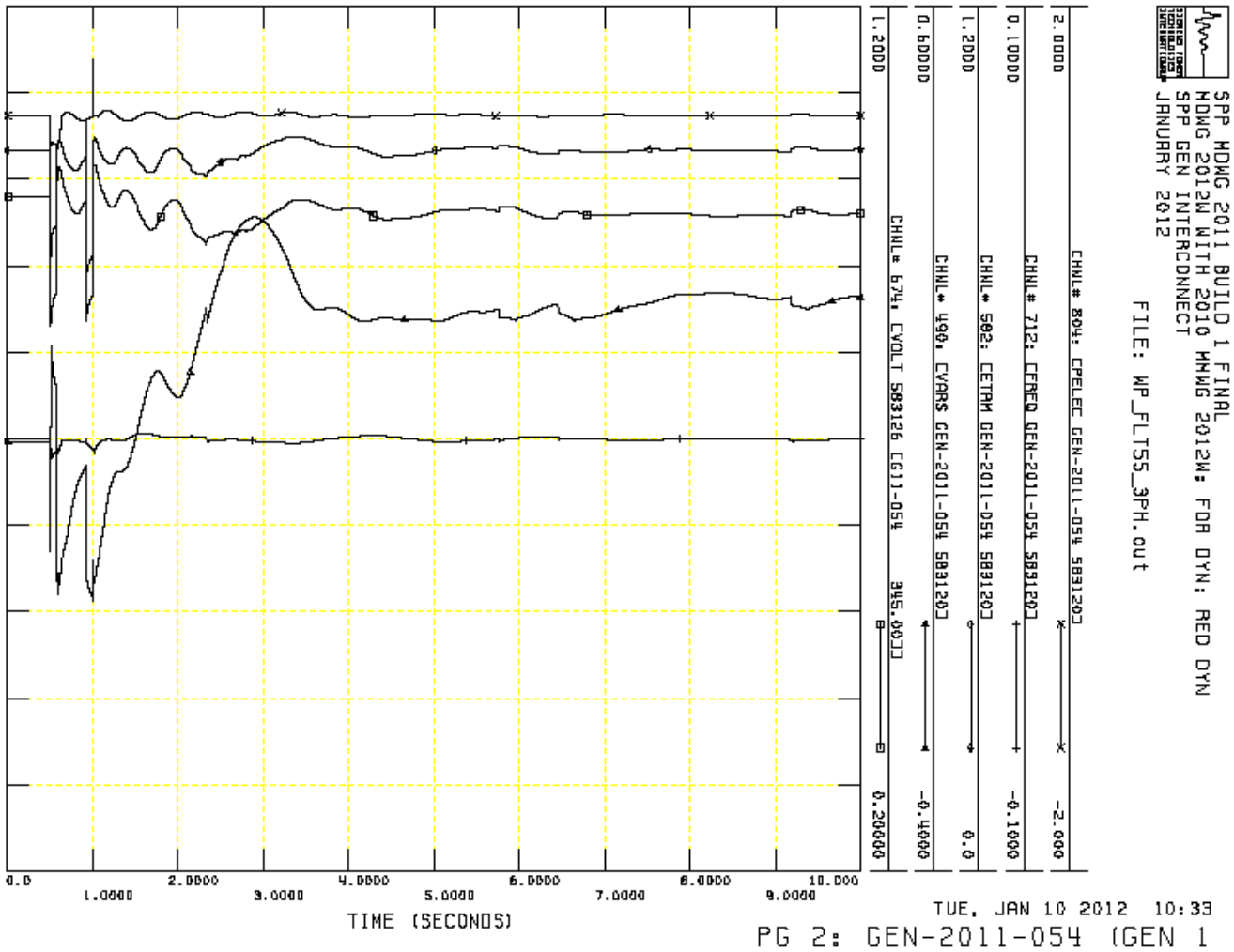

Figure 4-5. Response of GEN-2011-054 (Gen 1) project during case FLT55-3PH for winter peak conditions.

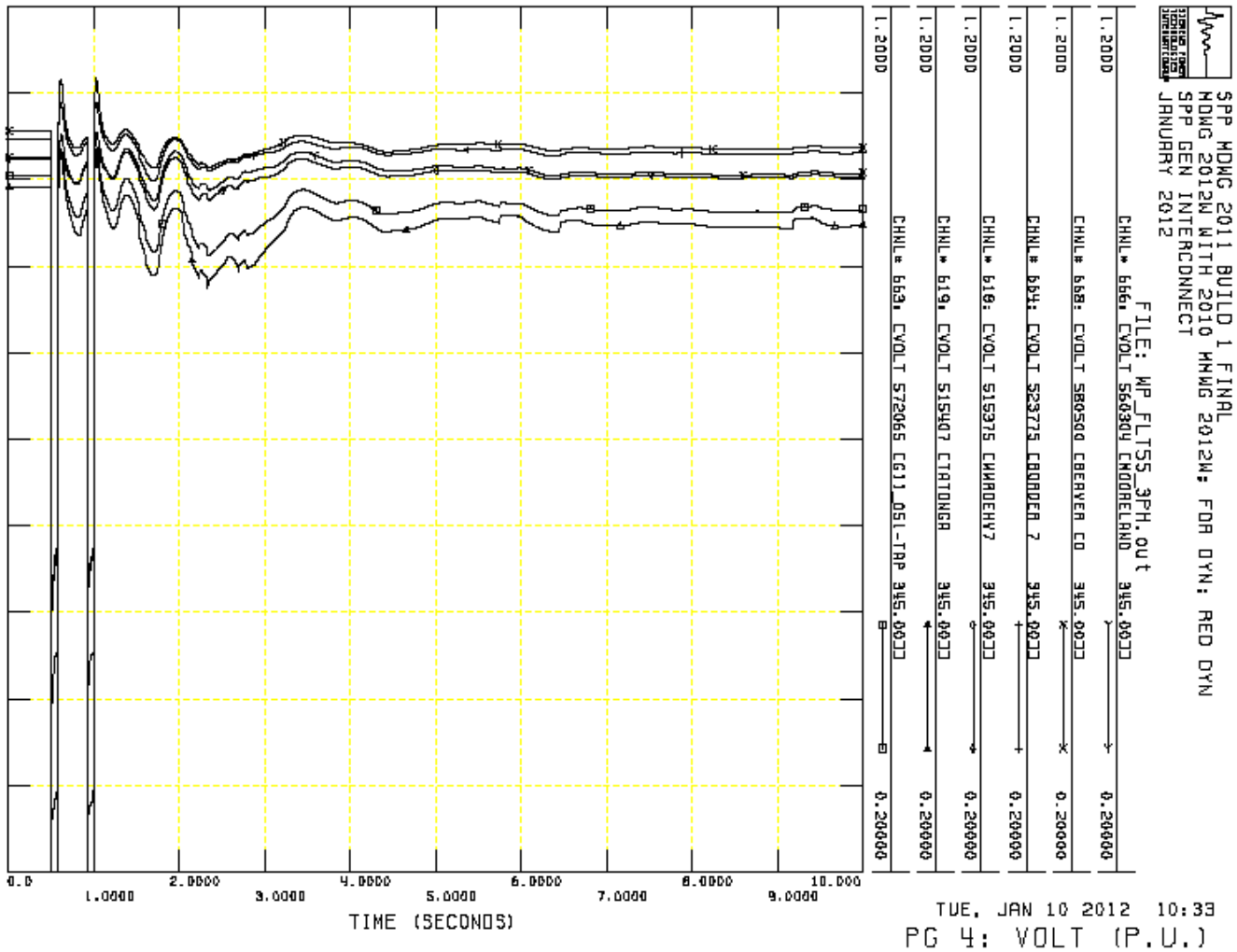

Figure 4-6. Response of selected area bus voltages for case FLT55-3PH for winter peak conditions.

Summary

The stability analysis determined that no wind generator tripping or system instability occurs by interconnecting GEN-2011-051 and GEN-2011-054 project at 100% output for all but four faults. A line is needed from the Woodward 345 kV bus to Tatonga 345 kV bus to acquire system stability for Faults 10, 12, 14, and 21 (Refer to Table 2-3 for a description of these cases). Refer to Appendix B and Appendix C for the stability plots of the study area and nearby system's bus voltage and generator's response during the disturbance for the summer peak and winter peak conditions, respectively.

SECTION 5: CONCLUSIONS

Power Factor Analysis

With the additional Woodward to Tatonga 345 kV line, the Power Factor Analysis shows that GEN-2011-051 has a power factor range of 0.5409 lagging (supplying) to 0.6931 leading (absorbing) and GEN-2011-054 has a power factor range of 0.5485 to 0.8292 lagging (supplying).

Without the additional Woodward to Tatonga 345 kV line, GEN-2011-051 has a power factor range of 0.3258 lagging (supplying) to 0.8316 leading (absorbing) and GEN-2011-054 has a power factor range of 0.5689 to 0.9390 lagging (supplying).

Stability Analysis

Several stability problems were seen in the initial stability simulations. Four faults caused system instability during winter peak conditions:

- Fault 10: 3 phase fault on the GEN-2011-051 Tap to Woodward 345 kV line
- Fault 12: 3 phase fault on the GEN-2011-051 Tap to Tatonga 345 kV line
- Fault 14: 3 phase fault on the Tatonga to Mathewson 345 kV line, Circuit 1
- Fault 21: 3 phase fault on the Arcadia to Northwest 345 kV line

After discussion with SPP, the best possible solution was to add a line from the Woodward 345 kV bus to the Tatonga 345 kV bus. Therefore, the Stability Analysis determined that after adding a line from the Woodward 345 kV bus to the Tatonga 345 kV bus, no wind turbine tripping or system instability occurs from interconnecting GEN-2011-051 and GEN-2011-054 at 100% output.

J: Stability Study for Group 2

No requests were located in the cluster group

K: Stability Study for Group 3

See next page.

Report on the

DEFINITIVE IMPACT STUDY DISIS-2011-002 GROUP 03

Southwest Power Pool

Project No. 65512

January 2012

TABLE OF CONTENTS

Page No.

EXECUTIVE SUMMARY **ES-1**

PART - I. INTRODUCTION **I-1**

STUDY SCOPE I-1

LIMITATIONS I-2

PART - II. STUDY ASSUMPTIONS **II-1**

STUDY MODELS II-1

PART - III. POWER FACTOR ANALYSIS **III-1**

PART - IV. STABILITY ANALYSIS **IV-1**

PART - V. CONCLUSION **V-1**

APPENDIX A – STABILITY MODELING DATA

APPENDIX B – STABILITY PLOTS

APPENDIX C – STABILITY PLOTS WITH GEN-2011-016 AND GEN-2011-017 RELAYING DISABLED

* * * * *

LIST OF TABLES

Table No. **Page No.**

Table ES-1: Group 3 Projects ES-1

Table I-1: Group 3 Interconnection Projects I-1

Table II-1: Prior Queued Projects II-3

Table III-1: Base Case pre-Group 3 POI Voltages III-1

Table III-2: Power Factor Contingency Summary III-1

Table III-3: GEN-2010-061 Power Factor Requirements III-2

Table III-4: GEN-2011-043 Power Factor Requirements III-3

Table III-5: GEN-2011-044 Power Factor Requirements III-4

Table IV-1: Stability Fault Scenario Summary IV-1

Table IV-2: Monitored Area Summary IV-6

* * * * *

LIST OF FIGURES

Table No. **Page No.**

Figure II-1: GEN-2010-061 Single-line Diagram II-2

Figure II-2: GEN-2011-043 and GEN-2011-044 Single-line Diagram II-2

* * * * *

EXECUTIVE SUMMARY

Burns & McDonnell was retained by Southwest Power Pool (SPP) to perform a Definitive Impact Study for the Group 3 (DISIS-2011-002) interconnection projects. This study included power factor analysis and stability analysis to find impacts on the transmission system caused by the interconnections of the Group 3 projects.

Group 3 consist of three generator interconnection projects as shown in Table ES-1. All three of the projects were proposed to connect to the Sunflower Electric Power Corporation transmission system. All projects in Group 3 are wind farm projects with the total combined capacity of 478.4 MW.

Table ES-1: Group 3 Projects

Request	Size (MW)	Wind Turbine Model	Point of Interconnection
GEN-2010-061	179.4	Siemens 2.3 MW	Tap on Spearville - Post Rock 345 kV line (G11-017 POI, 576704)
GEN-2011-043	149.5	Siemens 2.3 MW	Thistle 345 kV (539801)
GEN-2011-044	149.5	Siemens 2.3 MW	Thistle 345 kV (539801)

The objectives of the study were:

1. To perform a power factor analysis to identify the reactive power requirements at the respective point of interconnection.
2. To perform a stability analysis to determine the impacts on the system stability resulting from the interconnection of the Group 3 projects and the need for additional reactive support as required by FERC Order 661-A.

The power factor analysis showed that for each of the Group 3 projects, the majority of the contingency events resulted in power factor requirements exceeding the capability of the wind farms. The voltage at the point of interconnection for each of the Group 3 projects is less than 1.0 pu (nominal voltage) in the pre-project case and requires a significant amount of reactive power support to reach 1.0 pu. The Group 3 projects will have a power factor requirement of 95% lagging (providing vars) and 95% leading (absorbing vars) at the point of interconnection.

The stability analysis results showed no generator tripping or transient voltage violations for the Group 3 projects. The stability analysis results showed that the Group 3 projects met the low-voltage ride through

and pre-fault voltage recovery requirements of FERC Order 661-A for the fault scenarios analyzed. There were no system stability issues caused by the interconnection of the Group 3 projects which required mitigation.

* * * * *

PART - I. INTRODUCTION

STUDY SCOPE

Burns & McDonnell was retained by Southwest Power Pool (SPP) to perform a Definitive Impact Study for the Group 3 (DISIS-2011-002) interconnection projects. This study included power factor analysis and stability analysis to find impacts on the transmission system caused by the interconnections of the Group 3 projects.

Group 3 consist of three generator interconnection projects as shown in Table I-1. All three of the projects were proposed to connect to the SUNC control area. All the projects in the group are wind farm projects with the total capacity of 478.4 MW.

Table I-1: Group 3 Interconnection Projects

Request	Size (MW)	Wind Turbine Model	Point of Interconnection
GEN-2010-061	179.4	Siemens 2.3 MW	Tap on Spearville - Post Rock 345 kV line (G11-017 POI, 576704)
GEN-2011-043	149.5	Siemens 2.3 MW	Thistle 345 kV (539801)
GEN-2011-044	149.5	Siemens 2.3 MW	Thistle 345 kV (539801)

The objectives of the study were:

1. To perform a power factor analysis to identify the reactive power requirements at the respective point of interconnection.
2. To perform a stability analysis to determine the impacts on the system stability resulting from the interconnection of the Group 3 projects and the need for additional reactive support as required by FERC Order 661-A.

This report is presented in the following four parts:

- Part I – Introduction
- Part II – Study Assumptions
- Part III – Power Factor Analysis
- Part IV – Stability Analysis
- Part V – Conclusion

Detailed results of the analyses are contained in the Appendices and are referenced throughout the report.

LIMITATIONS

In the preparation of this report, the information provided to Burns & McDonnell by others was used by Burns & McDonnell to make certain assumptions with respect to conditions which may exist in the future. While Burns & McDonnell believes the assumptions made are reasonable for the purposes of this report, Burns & McDonnell makes no representation that the conditions assumed will, in fact, occur. In addition, while Burns & McDonnell has no reason to believe that the information provided by others, and on which this report is based, is inaccurate in any material respect, Burns & McDonnell has not independently verified such information and cannot guarantee its accuracy or completeness. To the extent that actual future conditions differ from those assumed herein or from the information provided to Burns & McDonnell, the actual results will vary from those presented.

* * * * *

PART - II. STUDY ASSUMPTIONS

STUDY MODELS

The following power flow models were used for the power factor analysis and stability analysis as provided by SPP:

- **MDWG_2011_2012SP_G3.sav** – Model Development Working Group 2011 Series 2012 Summer Peak Group 3 projects
- **MDWG_2011_2012WP_G3.sav** – Model Development Working Group 2011 Series 2012 Winter Peak Group 3 projects

Each of the provided cases contained the Group 3 projects modeled. GEN-2010-061 was modeled as a 179.4 MW single generator representing the aggregate of 78 wind turbines. GEN-2011-043 and GEN-2011-044 were modeled as 149.5 MW single generators each representing the aggregate of 65 wind turbines. Each of the Group 3 projects utilizes the Siemens SWT 2.3 MW 60 Hz wind turbine generator (SWT WTG). The SWT WTG consists of a rotor, gearbox, induction generator, machine bridge, DC link, and network bridge. The machine bridge and network bridge decouple the generator from the power system and allows the WTG to operate at a definite power factor set point. The power factor range of operation in steady-state and dynamically is variable and is a function of the voltage at the generator terminals and the active power output of the generator. At rated output power and at nominal terminal voltage, the output power factor range varies from 90% leading (inductive) to 90% lagging (capacitive). The lagging power factor range is reduced if the terminal voltage is higher than nominal. The leading power factor range is reduced if the terminal voltage is less than nominal and increased if the terminal voltage is greater than nominal.

Single-line diagrams for each of the Group 3 projects for summer peak conditions are provided in Figure II-1 and Figure II-2.

Figure II-1: GEN-2010-061 Single-line Diagram

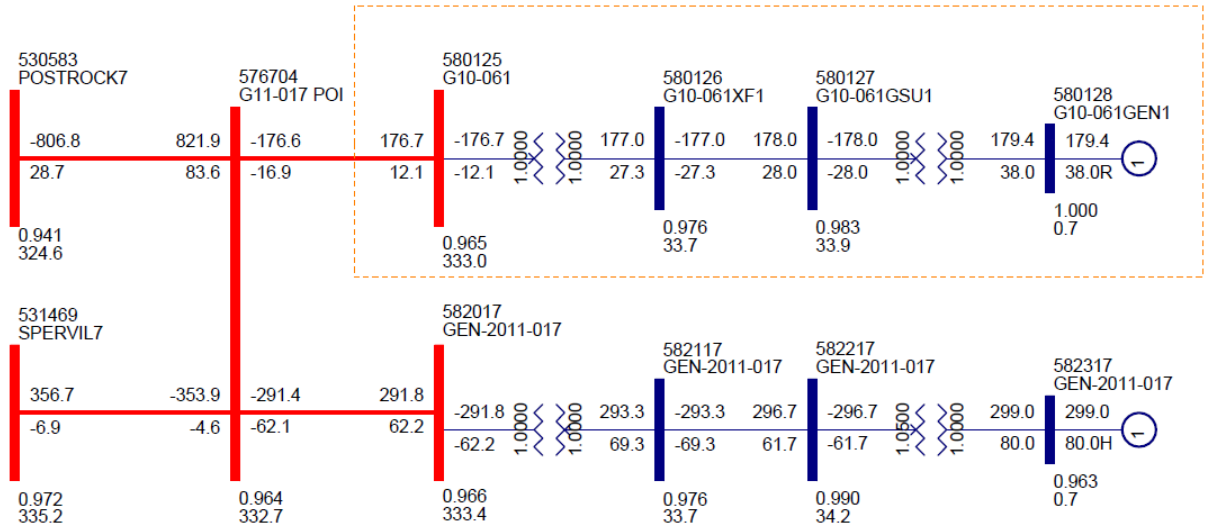

Figure II-2: GEN-2011-043 and GEN-2011-044 Single-line Diagram

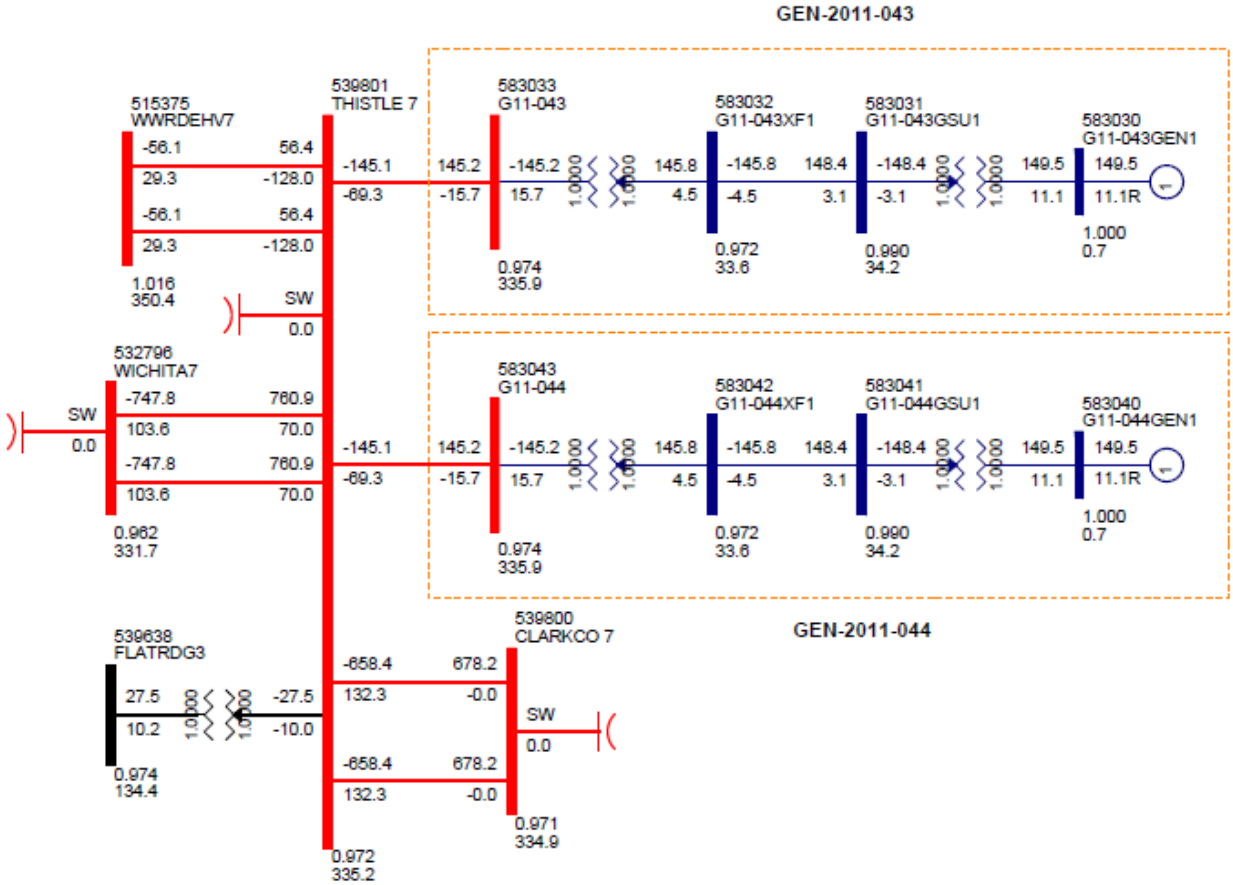

Prior queued projects were modeled in the provided cases. Similar to each of the Group 3 projects, the prior queued projects were modeled as the aggregate of wind turbine generators. The prior queued projects as modeled are provided in Table II-1.

Table II-1: Prior Queued Projects

Request	Size (MW)	Wind Turbine Model	Point of Interconnection
GEN-2001-039A	104	GE 1.6MW	Tap on Fort Dodge – Greensburg 115kV line (579025)
GEN-2002-025A	150	GE 1.5 MW	Spearville 230kV (539695)
GEN-2004-014	154.5	GE 1.5 MW	Spearville 230kV (539695)
GEN-2005-012	250.7	Siemens 2.3MW	Spearville 345kV (531469)
GEN-2006-006	205.5	GE 1.5 MW	Spearville 345kV (531469)
GEN-2006-021	100	Clipper 2.5MW	Flat Ridge 138kV (539638)
GEN-2006-022	150	Clipper 2.5MW	Pratt 115kV (539687)
GEN-2007-038	200	Clipper 2.5MW	Spearville 345kV (531469)
GEN-2007-040	200.1	Siemens 2.3MW	Gray County 345kV (579284)
GEN-2008-018	405	GE 1.5 MW	Finney 345kV (523853)
GEN-2008-079	99.5	G.E. 1.5 MW & 1.6MW	Tap on Cudahy – Fort Dodge 115kV line (573029)
GEN-2008-124	200.1	Siemens 2.3MW	Spearville 345kV (531469)
GEN-2010-009	165.6	Siemens SWT 2.3MW	Gray County 345kV (579284)
GEN-2010-015	200.1	Siemens SWT 2.3MW	Spearville 345kV (531469)
GEN-2010-029	450	Vestas V90 1.8MW	Spearville 345kV (531469)
GEN-2010-045	197.8	Siemens 2.3MW	Gray County 345kV (579284)
GEN-2010-049	49.6	GE 1.6MW	Pratt 115kV (539687)
GEN-2010-052	301.3	Siemens 2.3MW	Finney 345kV (523853)
GEN-2010-053	199.8	Vestas V90 1.8MW	Clark County 345kV (539800)
GEN-2011-008	600	GE 1.6MW	Clark County 345kV (539800)
GEN-2011-016	200.1	Siemens 2.3MW	Spearville 345kV (531469)
GEN-2011-017	299	Siemens 2.3MW	Tap on Spearville – Post Rock 345kV line (G11-017 POI, 576704)
GEN-2011-023	299	Siemens 2.3MW	Clark County 345kV (539800)

* * * * *

PART - III. POWER FACTOR ANALYSIS

Power factor analysis was performed to identify the reactive power requirements for each of the Group 3 projects. For each of the Group 3 projects, the wind farm project as modeled, as well as any previous queued projects sharing the same point of interconnection was turned off for the power factor analysis. The wind farms were replaced with two generators modeled at the high side bus of the collector substation. The first generator was modeled to reflect the real power (MW) output of the wind project and no reactive (var) capability. The second generator was modeled to reflect a var generator that was set to maintain a voltage schedule at the point of interconnection consistent with the voltage schedule in the provided base case or 1.0 pu voltage, whichever was higher.

The pre-project base case voltages at the point of interconnection (POI) for each of the Group 3 projects for the summer peak and winter peak seasons are provided in Table III-1.

Table III-1: Base Case pre-Group 3 POI Voltages

Project	Point of Interconnection	2012 Voltage (pu)	
		Summer Peak	Winter Peak
GEN-2010-061	Tap on Spearville - Post Rock 345 kV line (G11-017 POI, 576704)	0.970	0.985
GEN-2011-043	Thistle 345 kV (539801)	0.966	0.951
GEN-2011-044	Thistle 345 kV (539801)	0.966	0.951

As part of SPP reactive power requirements, the interconnecting project must meet a voltage schedule at the point of interconnection or nominal voltage, whichever is higher. Based on the point of interconnection voltages in the provided base cases, each of the Group 3 projects were modeled to meet a voltage schedule at the nominal voltage (1.0 pu) for both the summer peak and winter peak cases.

Each of the Group 3 projects were analyzed under the single element contingency conditions listed in Table III-2:

Table III-2: Power Factor Contingency Summary

Contingency ID	Description
1	Outage of the G11-017 POI (576704) to Postrock (530583) 345kV line
3	Outage of the G11-017 POI (576704) to Spearville (531469) 345kV line
5	Outage of the Postrock (530583) to 2011-001-POI (580129) 345kV line
7	Outage of the 2011-001-POI (580129) to Axtell (640065) 345kV line
9	Outage of the Spearville (531469) to Gray County (579284) 345kV line

Table III-2: Power Factor Contingency Summary (Continued)

Contingency ID	Description
11	Outage of the Spearville (531469) to Mullergren (560013) 345kV line ckt1
13	Outage of the Spearville (531469) to Clark County (539800) 345kV line ckt1
15	Outage of the Gray County (579284) to Holcomb (531449) 345kV line
17	Outage of the Gray County (579284) to Beaver County (580500) 345kV line
19	Outage of the Thistle (539801) to Woodward (515375) 345kV line ckt1
21	Outage of the Thistle (539801) to Wichita (532796) 345kV line ckt1
23	Outage of the Thistle (539801) to Clark County (539800) 345kV line ckt1
25	Outage of the Woodward (515375) to Border (523775) 345kV line
27	Outage of the Woodward (515375) to Mooreland (560304) 345kV line
29	Outage of the Woodward (515375) to Beaver County (580500) 345kV line ckt1
31	Outage of the Wichita (532796) to Empec (532768) 345kV line
33	Outage of the Wichita (532796) to Reno (532771) 345kV line
35	Outage of the Wichita (532796) to Benton (532791) 345kV line
37	Outage of the Thistle (539801) to Woodward (515375) 345kV line ckt1&2
38	Outage of the Thistle (539801) to Wichita (532796) 345kV line ckt1&2
39	Outage of the Thistle (539801) to Clark County (539800) 345kV line ckt1&2
40	Outage of the Woodward (515375) to Beaver County (580500) 345kV line ckt1&2
41	Outage of the Spearville (531469) to Mullergren (560013) 345kV line ckt1&2
42	Outage of the Spearville (531469) to Clark County (539800) 345kV line ckt1&2
43	Outage of the Thistle (539801) 345kV to Flatridge (539368) 138kV transformer
44	Outage of the Woodward (515375) 345kV to Woodward (515376) 138kV/(515795) 13.8kV transformer
45	Outage of the Wichita (532796) 345kV to Evans (533040) 138kV/(532830) 13.8kV transformer
46	Outage of the Postrock (530583) 345kV to Postrock (530584) 138kV/(530673) 13.8kV transformer
47	Outage of the Spearville (531469) 345kV to Spearville (539695) 230kV/(531468) 13.8 kV transformer

The power factor requirements for each of the contingency events provided in Table III-2 are listed in Table III-3 through Table III-5 for each of the Group 3 projects. The contingency events which resulted in required reactive support that exceeded the capability of the wind farm are highlighted in red.

Table III-3: GEN-2010-061 Power Factor Requirements

Contingency Number	Summer Peak				Winter Peak			
	P (MW)	Q (MVAR)	Power Factor		P (MW)	Q (MVAR)	Power Factor	
1	179.4	117.2	83.72%	Lagging	179.4	110	85.25%	Lagging
3	179.4	17.1	99.55%	Lagging	179.4	6.3	99.94%	Lagging
5	179.4	130.9	80.78%	Lagging	179.4	86.3	90.12%	Lagging
7	179.4	127.6	81.49%	Lagging	179.4	91.4	89.10%	Lagging
9	179.4	193.6	67.97%	Lagging	179.4	163	74.01%	Lagging
11	179.4	270.8	55.23%	Lagging	179.4	234	60.84%	Lagging
13	179.4	218.5	63.46%	Lagging	179.4	180.9	70.42%	Lagging

Table III-3: GEN-2010-061 Power Factor Requirements (Continued)

Contingency Number	Summer Peak				Winter Peak			
	P (MW)	Q (MVAR)	Power Factor		P (MW)	Q (MVAR)	Power Factor	
15	179.4	192.1	68.25%	Lagging	179.4	158	75.04%	Lagging
17	179.4	286.8	53.03%	Lagging	179.4	250	58.30%	Lagging
19	179.4	223.8	62.55%	Lagging	179.4	193.5	67.99%	Lagging
21	179.4	272.4	55.00%	Lagging	179.4	245.1	59.06%	Lagging
23	179.4	300.5	51.26%	Lagging	179.4	264.4	56.15%	Lagging
25	179.4	214.6	64.14%	Lagging	179.4	182.2	70.16%	Lagging
27	179.4	208.9	65.15%	Lagging	179.4	174.5	71.68%	Lagging
29	179.4	232.5	61.09%	Lagging	179.4	202.1	66.39%	Lagging
31	179.4	224.4	62.44%	Lagging	179.4	197	67.33%	Lagging
33	179.4	201	66.59%	Lagging	179.4	157.5	75.15%	Lagging
35	179.4	220.2	63.16%	Lagging	179.4	192.7	68.14%	Lagging
37	179.4	244.1	59.22%	Lagging	179.4	222.2	62.82%	Lagging
38	179.4	504.1	33.53%	Lagging	179.4	519.9	32.62%	Lagging
39	179.4	645.2	26.79%	Lagging	179.4	625	27.59%	Lagging
40	179.4	280.4	53.89%	Lagging	179.4	261.3	56.60%	Lagging
41	179.4	479	35.07%	Lagging	179.4	443.8	37.48%	Lagging
42	179.4	260	56.79%	Lagging	179.4	212.3	64.54%	Lagging
43	179.4	209.6	65.03%	Lagging	179.4	174.9	71.60%	Lagging
44	179.4	209	65.13%	Lagging	179.4	174.3	71.72%	Lagging
45	179.4	213	64.42%	Lagging	179.4	179	70.79%	Lagging
46	179.4	211.3	64.72%	Lagging	179.4	179.8	70.63%	Lagging
47	179.4	206	65.67%	Lagging	179.4	173.1	71.96%	Lagging

Table III-4: GEN-2011-043 Power Factor Requirements

Contingency Number	Summer Peak				Winter Peak			
	P (MW)	Q (MVAR)	Power Factor		P (MW)	Q (MVAR)	Power Factor	
1	149.5	558.3	25.87%	Lagging	149.5	706.3	20.71%	Lagging
3	149.5	388.2	35.94%	Lagging	149.5	530.1	27.14%	Lagging
5	149.5	430.2	32.83%	Lagging	149.5	601.3	24.13%	Lagging
7	149.5	439.3	32.22%	Lagging	149.5	619.7	23.45%	Lagging
9	149.5	270.6	48.36%	Lagging	149.5	384.3	36.26%	Lagging
11	149.5	403.7	34.73%	Lagging	149.5	524.8	27.40%	Lagging
13	149.5	282.1	46.83%	Lagging	149.5	409.5	34.29%	Lagging
15	149.5	273.4	47.98%	Lagging	149.5	396	35.32%	Lagging
17	149.5	413.2	34.02%	Lagging	149.5	533.6	26.98%	Lagging
19	149.5	391.5	35.67%	Lagging	149.5	511.8	28.04%	Lagging
21	149.5	278.8	47.26%	Lagging	149.5	389.1	35.87%	Lagging
23	149.5	338.3	40.42%	Lagging	149.5	470.8	30.27%	Lagging
25	149.5	306.9	43.79%	Lagging	149.5	432.9	32.64%	Lagging

Table III-4: GEN-2011-043 Power Factor Requirements (Continued)

Contingency Number	Summer Peak				Winter Peak			
	P (MW)	Q (MVAR)	Power Factor		P (MW)	Q (MVAR)	Power Factor	
27	149.5	290.4	45.77%	Lagging	149.5	416.1	33.81%	Lagging
29	149.5	352.2	39.07%	Lagging	149.5	485.4	29.43%	Lagging
31	149.5	302.4	44.32%	Lagging	149.5	452.5	31.37%	Lagging
33	149.5	424.7	33.20%	Lagging	149.5	586.7	24.69%	Lagging
35	149.5	246.9	51.80%	Lagging	149.5	397.3	35.22%	Lagging
37	149.5	488.9	29.24%	Lagging	149.5	606.1	23.95%	Lagging
38	149.5	137.6	73.58%	Lagging	149.5	219.2	56.35%	Lagging
39*	-	-	-	-	-	-	-	-
40	149.5	456.4	31.13%	Lagging	149.5	611.6	23.74%	Lagging
41	149.5	838.9	17.54%	Lagging	149.5	950.7	15.53%	Lagging
42	149.5	123.3	77.15%	Lagging	149.5	262.3	49.52%	Lagging
43	149.5	292.5	45.51%	Lagging	149.5	411.8	34.12%	Lagging
44	149.5	288.6	46.00%	Lagging	149.5	412.8	34.05%	Lagging
45	149.5	297.9	44.85%	Lagging	149.5	422.2	33.38%	Lagging
46	149.5	295.2	45.18%	Lagging	149.5	417.8	33.69%	Lagging
47	149.5	290.6	45.75%	Lagging	149.5	414.5	33.93%	Lagging

* Non-converged contingency

Table III-5: GEN-2011-044 Power Factor Requirements

Contingency Number	Summer Peak				Winter Peak			
	P (MW)	Q (MVAR)	Power Factor		P (MW)	Q (MVAR)	Power Factor	
1	149.5	558.3	25.87%	Lagging	149.5	706.3	20.71%	Lagging
3	149.5	388.2	35.94%	Lagging	149.5	530.1	27.14%	Lagging
5	149.5	430.2	32.83%	Lagging	149.5	601.3	24.13%	Lagging
7	149.5	439.3	32.22%	Lagging	149.5	619.7	23.45%	Lagging
9	149.5	270.6	48.36%	Lagging	149.5	384.3	36.26%	Lagging
11	149.5	403.7	34.73%	Lagging	149.5	524.8	27.40%	Lagging
13	149.5	282.1	46.83%	Lagging	149.5	409.5	34.29%	Lagging
15	149.5	273.4	47.98%	Lagging	149.5	396	35.32%	Lagging
17	149.5	413.2	34.02%	Lagging	149.5	533.6	26.98%	Lagging
19	149.5	391.5	35.67%	Lagging	149.5	511.8	28.04%	Lagging
21	149.5	278.8	47.26%	Lagging	149.5	389.1	35.87%	Lagging
23	149.5	338.3	40.42%	Lagging	149.5	470.8	30.27%	Lagging
25	149.5	306.9	43.79%	Lagging	149.5	432.9	32.64%	Lagging
27	149.5	290.4	45.77%	Lagging	149.5	416.1	33.81%	Lagging
29	149.5	352.2	39.07%	Lagging	149.5	485.4	29.43%	Lagging
31	149.5	302.4	44.32%	Lagging	149.5	452.5	31.37%	Lagging
33	149.5	424.7	33.20%	Lagging	149.5	586.7	24.69%	Lagging

Table III-5: GEN-2011-044 Power Factor Requirements (Continued)

Contingency Number	Summer Peak				Winter Peak			
	P (MW)	Q (MVAR)	Power Factor		P (MW)	Q (MVAR)	Power Factor	
35	149.5	246.9	51.80%	Lagging	149.5	397.3	35.22%	Lagging
37	149.5	488.9	29.24%	Lagging	149.5	606.1	23.95%	Lagging
38	149.5	137.6	73.58%	Lagging	149.5	219.2	56.35%	Lagging
39*	-	-	-	-	-	-	-	-
40	149.5	456.4	31.13%	Lagging	149.5	611.6	23.74%	Lagging
41	149.5	838.9	17.54%	Lagging	149.5	950.7	15.53%	Lagging
42	149.5	123.3	77.15%	Lagging	149.5	262.3	49.52%	Lagging
43	149.5	292.5	45.51%	Lagging	149.5	411.8	34.12%	Lagging
44	149.5	288.6	46.00%	Lagging	149.5	412.8	34.05%	Lagging
45	149.5	297.9	44.85%	Lagging	149.5	422.2	33.38%	Lagging
46	149.5	295.2	45.18%	Lagging	149.5	417.8	33.69%	Lagging
47	149.5	290.6	45.75%	Lagging	149.5	414.5	33.93%	Lagging

* Non-converged contingency

The results from the power factor analysis showed that for each of the Group 3 projects, the majority of the contingency events resulted in power factor requirements exceeding the capability of the wind farm. The voltage at the POI for each of the Group 3 projects is less than 1.0 pu (nominal voltage) in the pre-project case, as shown in Table III-1, and it requires a significant amount of reactive power support to reach 1.0 pu under system intact and contingency conditions.

For the GEN-2011-043 and GEN-2011-044 projects, contingency number 39 resulted in a non-converged system condition. These results were presented and discussed with SPP. SPP has concluded that an outage of the double circuit line is not likely and therefore requires no further action within this analysis.

The power factor results indicate that reactive power requirements exceed 95% lagging at the point of interconnection. However, SPP limits the power factor requirement to 95% lagggin and 95% leading power factor at the point of interconnection if the transient stability analysis does not indicate additional stability problems.

* * * * *

PART - IV. STABILITY ANALYSIS

Stability analysis was performed to identify impacts on the system stability resulting from the interconnection of the Group 3 projects. The model and associated dynamics database were provided by SPP as a basis for performing the stability analysis. The dynamics model data for each of the Group 3 projects is provided in Appendix A. The stability study was performed using PSS/E version 30.3.2.

Stability analysis was performed for the three phase fault scenarios and single phase line fault scenarios that were provided by SPP. The analyzed fault scenarios are listed in Table IV-1.

Table IV-1: Stability Fault Scenario Summary

Contingency Number	Contingency Name	Description
1	FLT01-3PH	3 phase fault on the G11-017 POI (576704) to Postrock (530583) 345kV line, near G11-017 POI. a. Apply fault at the G11-017 POI 345kV bus. b. Clear fault after 5 cycles by tripping the faulted line. c. Wait 20 cycles, and then re-close the line in (b) back into the fault. d. Leave fault on for 5 cycles, then trip the line in (b) and remove fault.
2	FLT02-1PH	*Single phase fault and sequence like previous*
3	FLT03-3PH	3 phase fault on the G11-017 POI (576704) to Spearville (531469) 345kV line, near G11-017 POI. a. Apply fault at the G11-017 POI 345kV bus. b. Clear fault after 5 cycles by tripping the faulted line. c. Wait 20 cycles, and then re-close the line in (b) back into the fault. d. Leave fault on for 5 cycles, then trip the line in (b) and remove fault.
4	FLT04-1PH	*Single phase fault and sequence like previous*
5	FLT05-3PH	3 phase fault on Postrock (530583) to 2011-001-POI (580129) 345kV line, near Postrock. a. Apply fault at the Postrock 345kV bus. b. Clear fault after 5 cycles by tripping the faulted line. c. Wait 20 cycles, and then re-close the line in (b) back into the fault. d. Leave fault on for 5 cycles, then trip the line in (b) and remove fault.
6	FLT06-1PH	*Single phase fault and sequence like previous*
7	FLT07-3PH	3 phase fault on 2011-001-POI (580129) to Axtell (640065) 345kV line, near 2011-001-POI. a. Apply fault at the 2011-001-POI 345kV bus. b. Clear fault after 5 cycles by tripping the faulted line. c. Wait 20 cycles, and then re-close the line in (b) back into the fault. d. Leave fault on for 5 cycles, then trip the line in (b) and remove fault.
8	FLT08-1PH	*Single phase fault and sequence like previous*

Table IV-1: Stability Fault Scenario Summary (Continued)

Contingency Number	Contingency Name	Description
9	FLT09-3PH	3 phase fault on Spearville (531469) to Gray County (579284) 345kV line, near Spearville. a. Apply fault at the Spearville 345kV bus. b. Clear fault after 5 cycles by tripping the faulted line. c. Wait 20 cycles, and then re-close the line in (b) back into the fault. d. Leave fault on for 5 cycles, then trip the line in (b) and remove fault.
10	FLT10-1PH	*Single phase fault and sequence like previous*
11	FLT11-3PH	3 phase fault on Spearville (531469) to Mullergren (560013) 345kV line, ckt1, near Spearville. a. Apply fault at the Spearville 345kV bus. b. Clear fault after 5 cycles by tripping the faulted line. c. Wait 20 cycles, and then re-close the line in (b) back into the fault. d. Leave fault on for 5 cycles, then trip the line in (b) and remove fault.
12	FLT12-1PH	*Single phase fault and sequence like previous*
13	FLT13-3PH (see note at end of table)	3 phase fault on Spearville (531469) to Clark County (539800) 345kV line, ckt1, near Spearville. a. Apply fault at the Spearville 345kV bus. b. Clear fault after 5 cycles by tripping the faulted line. c. Wait 20 cycles, and then re-close the line in (b) back into the fault. d. Leave fault on for 5 cycles, then trip the line in (b) and remove fault.
14	FLT14-1PH	*Single phase fault and sequence like previous*
15	FLT15-3PH	3 phase fault on Gray County (579284) to Holcomb (531449) 345kV line, near Gray County. a. Apply fault at the Gray County 345kV bus. b. Clear fault after 5 cycles by tripping the faulted line. c. Wait 20 cycles, and then re-close the line in (b) back into the fault. d. Leave fault on for 5 cycles, then trip the line in (b) and remove fault.
16	FLT16-1PH	*Single phase fault and sequence like previous*
17	FLT17-3PH (see note at end of table)	3 phase fault on Gray County (579284) to Beaver County (580500) 345kV line, near Gray County. a. Apply fault at the Gray County 345kV bus. b. Clear fault after 5 cycles by tripping the faulted line. c. Wait 20 cycles, and then re-close the line in (b) back into the fault. d. Leave fault on for 5 cycles, then trip the line in (b) and remove fault.
18	FLT18-1PH	*Single phase fault and sequence like previous*
19	FLT19-3H (see note at end of table)	3 phase fault on Thistle (539801) to Woodward (515375) 345kV line, ckt1, near Thistle. a. Apply fault at the Thistle 345kV bus. b. Clear fault after 5 cycles by tripping the faulted line. c. Wait 20 cycles, and then re-close the line in (b) back into the fault. d. Leave fault on for 5 cycles, then trip the line in (b) and remove fault.
20	FLT20-1PH	*Single phase fault and sequence like previous*

Table IV-1: Stability Fault Scenario Summary (Continued)

Contingency Number	Contingency Name	Description
21	FLT21-3PH (see note at end of table)	3 phase fault on Thistle (539801) to Wichita (532796) 345kV line, ckt1, near Thistle. a. Apply fault at the Thistle 345kV bus. b. Clear fault after 5 cycles by tripping the faulted line. c. Wait 20 cycles, and then re-close the line in (b) back into the fault. d. Leave fault on for 5 cycles, then trip the line in (b) and remove fault.
22	FLT22-1PH	*Single phase fault and sequence like previous*
23	FLT23-3PH (see note at end of table)	3 phase fault on Thistle (539801) to Clark County (539800) 345kV line, ckt1, near Thistle. a. Apply fault at the Thistle 345kV bus. b. Clear fault after 5 cycles by tripping the faulted line. c. Wait 20 cycles, and then re-close the line in (b) back into the fault. d. Leave fault on for 5 cycles, then trip the line in (b) and remove fault.
24	FLT24-1PH	*Single phase fault and sequence like previous*
25	FLT25-3PH	3 phase fault on the Woodward (515375) to Border (523775) 345kV line, near Woodward. a. Apply fault at Woodward 345kV bus. b. Clear fault after 5 cycles by tripping the faulted line. c. Wait 20 cycles, and then re-close the line in (b) back into the fault. d. Leave fault on for 5 cycles, then trip the line in (b) and remove fault.
26	FLT26-1PH	*Single phase fault and sequence like previous*
27	FLT27-3PH	3 phase fault on the Woodward (515375) to Mooreland (560304) 345kV line, near Woodward. a. Apply fault at Woodward 345kV bus. b. Clear fault after 5 cycles by tripping the faulted line. c. Wait 20 cycles, and then re-close the line in (b) back into the fault. d. Leave fault on for 5 cycles, then trip the line in (b) and remove fault.
28	FLT28-1PH	*Single phase fault and sequence like previous*
29	FLT29-3PH	3 phase fault on the Woodward (515375) to Beaver County (580500) 345kV line, ckt1, near Woodward. a. Apply fault at Woodward 345kV bus. b. Clear fault after 5 cycles by tripping the faulted line. c. Wait 20 cycles, and then re-close the line in (b) back into the fault. d. Leave fault on for 5 cycles, then trip the line in (b) and remove fault.
30	FLT30-1PH	*Single phase fault and sequence like previous*
31	FLT31-3PH (see note at end of table)	3 phase fault on the Wichita (532796) to Empec (532768) 345kV line, near Wichita. a. Apply fault at Wichita 345kV bus. b. Clear fault after 5 cycles by tripping the faulted line. c. Wait 20 cycles, and then re-close the line in (b) back into the fault. d. Leave fault on for 5 cycles, then trip the line in (b) and remove fault.
32	FLT32-1PH	*Single phase fault and sequence like previous*

Table IV-1: Stability Fault Scenario Summary (Continued)

Contingency Number	Contingency Name	Description
33	FLT33-3PH (see note at end of table)	3 phase fault on the Wichita (532796) to Reno (532771) 345kV line, near Wichita. a. Apply fault at Wichita 345kV bus. b. Clear fault after 5 cycles by tripping the faulted line. c. Wait 20 cycles, and then re-close the line in (b) back into the fault. d. Leave fault on for 5 cycles, then trip the line in (b) and remove fault.
34	FLT34-1PH	*Single phase fault and sequence like previous*
35	FLT35-3PH (see note at end of table)	3 phase fault on the Wichita (532796) to Benton (532791) 345kV line, near Wichita. a. Apply fault at Wichita 345kV bus. b. Clear fault after 5 cycles by tripping the faulted line. c. Wait 20 cycles, and then re-close the line in (b) back into the fault. d. Leave fault on for 5 cycles, then trip the line in (b) and remove fault.
36	FLT36-1PH	*Single phase fault and sequence like previous*
37	FLT37-3PH (see note at end of table)	3 phase fault on Thistle (539801) to Woodward (515375) 345kV line, ckt1&2, near Thistle. a. Apply fault at the Thistle 345kV bus. b. Clear fault after 5 cycles by tripping the faulted line. c. Wait 20 cycles, and then re-close the line in (b) back into the fault. d. Leave fault on for 5 cycles, then trip the line in (b) and remove fault.
38	FLT38-3PH (see note at end of table)	3 phase fault on Thistle (539801) to Wichita (532796) 345kV line, ckt1&2, near Thistle. a. Apply fault at the Thistle 345kV bus. b. Clear fault after 5 cycles by tripping the faulted line. c. Wait 20 cycles, and then re-close the line in (b) back into the fault. d. Leave fault on for 5 cycles, then trip the line in (b) and remove fault.
39	FLT39-3PH (see note at end of table)	3 phase fault on Thistle (539801) to Clark County (539800) 345kV line, ckt1&2, near Thistle. a. Apply fault at the Thistle 345kV bus. b. Clear fault after 5 cycles by tripping the faulted line. c. Wait 20 cycles, and then re-close the line in (b) back into the fault. d. Leave fault on for 5 cycles, then trip the line in (b) and remove fault.
40	FLT40-3PH	3 phase fault on the Woodward (515375) to Beaver County (580500) 345kV line, ckt1&2, near Woodward. a. Apply fault at Woodward 345kV bus. b. Clear fault after 5 cycles by tripping the faulted line. c. Wait 20 cycles, and then re-close the line in (b) back into the fault. d. Leave fault on for 5 cycles, then trip the line in (b) and remove fault.
41	FLT41-3PH	3 phase fault on Spearville (531469) to Mullergren (560013) 345kV line, ckt1&2, near Spearville. a. Apply fault at the Spearville 345kV bus. b. Clear fault after 5 cycles by tripping the faulted line. c. Wait 20 cycles, and then re-close the line in (b) back into the fault. d. Leave fault on for 5 cycles, then trip the line in (b) and remove fault.

Table IV-1: Stability Fault Scenario Summary (Continued)

Contingency Number	Contingency Name	Description
42	FLT42-3PH (see note at end of table)	3 phase fault on Spearville (531469) to Clark County (539800) 345kV line, ckt1&2, near Spearville. a. Apply fault at the Spearville 345kV bus. b. Clear fault after 5 cycles by tripping the faulted line. c. Wait 20 cycles, and then re-close the line in (b) back into the fault. d. Leave fault on for 5 cycles, then trip the line in (b) and remove fault.
43	FLT43-3PH	3 phase fault on the Thistle (539801) 345kV to Flatridge (539368) 138kV transformer near the 138kV bus. a. Apply fault at the Flatridge 138kVbus. b. Clear fault after 5 cycles and trip the faulted transformer.
44	FLT44-3PH	3 phase fault on the Woodward (515375) 345kV to Woodward (515376) 138kV/(515795) 13.8kV transformer near the 138kV bus. a. Apply fault at the Woodward 138kVbus. b. Clear fault after 5 cycles and trip the faulted transformer.
45	FLT45-3PH	3 phase fault on the Wichita (532796) 345kV to Evans (533040) 138kV/(532830) 13.8kV transformer near the 138kV bus. a. Apply fault at the Evans 138kVbus. b. Clear fault after 5 cycles and trip the faulted transformer.
46	FLT46-3PH	3 phase fault on the Postrock (530583) 345kV to Postrock (530584) 138kV/(530673) 13.8kV transformer near the 138kV bus. a. Apply fault at the Postrock 138kVbus. b. Clear fault after 5 cycles and trip the faulted transformer.
47	FLT47-3PH	3 phase fault on the Spearville (531469) 345kV to Spearville (539695) 230kV/(531468) 13.8 transformer near the 230kV bus. a. Apply fault at the Spearville 230kV bus. b. Clear fault after 5 cycles and trip the faulted transformer.

Note: Switched reactors associated with the affected buses may need to be manually adjusted.
SPP is determining the appropriate scheme and will revise the fault description as necessary.

Single-phase line faults were simulated by applying a fault impedance to the positive sequence network at the fault location to represent the effect of the negative and zero sequence networks on the positive sequence network. The fault impedance was computed to give a positive sequence voltage at the specified fault location of approximately 60% of pre-fault voltage. This method is in agreement with SPP current practice.

The control areas monitored for the simulated fault scenarios are listed in Table IV-2.

Table IV-2: Monitored Area Summary

Control Area	Description
520	American Electric Power West
524	Oklahoma Gas & Electric
525	Western Farmers Electric Cooperative
526	Southwestern Public Service
531	Midwest Energy
534	Sunflower Electric
536	Westar Energy
640	Nebraska Public Power District
645	Omaha Public Power District
650	Lincoln Electric System
652	Western Area Power Administration

Fault 39 in both the summer and winter peak cases, and fault 40 in the winter peak case, resulted in a non-converged system condition. Both faults 39 and 40 involve double circuit lines. These issues were presented and discussed with SPP. SPP does not mitigate issues associated with double circuit faults and therefore requires no further action within this analysis. Prior queued projects GEN-2011-016 and GEN-2011-017 showed voltage oscillation or generator trip due to under voltage relay for several faults simulated for the summer and winter peak seasons. This issue is due to the low voltage in the local area and unrelated to the interconnection of the Group 3 projects. Simulations were re-run for the contingencies that resulted in GEN-2011-016 and GEN-2011-017 tripping off-line with the voltage and frequency relays disabled. The results from the re-run showed unstable response for fault 38 in the winter peak season and fault 41 in both the summer and winter peak seasons. Both faults 38 and 41 involve double circuit lines. SPP does not mitigate issues associated with double circuit faults and therefore requires no further action within this analysis. The remainder of the re-run results showed that the Group 3 projects and system stability were not adversely affected with the voltage and frequency relays disabled at GEN-2011-016 and GEN-2011-017.

The remainder of the stability simulation results not associated with the re-run simulation showed no generator tripping or transient voltage violations, and the system response was stable for all the fault scenarios studied.

It is concluded that the interconnection of the Group 3 projects would not adversely impact the system stability. The stability analysis results also showed the Group 3 projects met the low-voltage ride through and pre-fault voltage recovery requirements of FERC Order 661-A for the fault scenarios analyzed.

Simulation plots are provided in Appendix B and Appendix C.

* * * * *

PART - V. CONCLUSION

The purpose of this study was to evaluate the impacts of the proposed Group 3 generation interconnection projects. Power factor analysis and stability analysis were performed for the evaluation.

The power factor analysis showed that for each of the Group 3 projects, the majority of the contingency events resulted in power factor requirements exceeding the capability of the wind farms. The voltage at the POI for each of the Group 3 projects is less than 1.0 pu (nominal voltage) in the pre-project case and requires a significant amount of reactive power support to reach 1.0 pu. The Group 3 projects will have a power factor requirement of 95% lagging (providing vars) and 95% leading (absorbing vars) at the point of interconnection.

The stability analysis results showed no generator tripping or transient voltage violations for the Group 3 projects. The stability analysis results showed that the Group 3 projects met the low-voltage ride through and pre-fault voltage recovery requirements of FERC Order 661-A for the fault scenarios analyzed. There were no system stability issues caused by the interconnection of the Group 3 projects which required mitigation.

It should be noted that the results of this study are based on available data and assumptions made at the time of this study. If any of the data and/or assumptions change, the results provided in this report may not apply.

* * * * *

Burns & McDonnell World Headquarters
9400 Ward Parkway
Kansas City, MO 64114
Phone: 816-333-9400
Fax: 816-333-3690
www.burnsmcd.com

Burns & McDonnell: Making our clients successful for more than 100 years

L: Stability Study for Group 4

No requests were located in the cluster group

M: Stability Study for Group 5

No requests were located in the cluster group

N: Stability Study for Group 6

See next page.

SPP DISIS-2011-002 Group 6
Definitive Impact Restudy

Draft Report for

Southwest Power Pool

Prepared by:
Excel Engineering, Inc.

January 24, 2012

Principal Contributor:

Shu Liu, P.E.
William Quaintance, P.E.

TABLE OF CONTENTS

LIST OF FIGURES 4

LIST OF TABLES 5

0. CERTIFICATION 6

1. BACKGROUND AND SCOPE 7

2. EXECUTIVE SUMMARY 9

3. STUDY DEVELOPMENT AND ASSUMPTIONS 10

3.1 Simulation Tools 10

3.2 Models Used 10

3.3 Monitored Facilities 10

3.4 Performance Criteria 16

3.5 Performance Evaluation Methods 16

4. RESULTS AND OBSERVATIONS 23

4.1 Stability Analysis Results 23

4.2 Power Factor Requirements 34

5. CONCLUSIONS 36

Appendix A – Summer Peak Plots

Appendix B – Winter Peak Plots

Appendix C – Power Factor Details

Appendix D – Project Model Data

Appendix E – SPP Transmission One-line Diagrams

List of Figures

Figure 3-1. Power Flow One-line for GEN-2011-045 11
Figure 3-2. Power Flow One-line for GEN-2011-046 12
Figure 3-3. Power Flow One-line for GEN-2011-048 13
Figure 3-4. Power Flow One-line for GEN-2011-058 14
Figure 3-5. Power Flow One-line for ASGI-2011-004 15
Figure 4-1. GEN-2011-045 Plot for Fault 65 – 3-Phase Fault on the Border (523775) to Tuco_Int (525832) 345kV line, near Border (WP) 27
Figure 4-2. GEN-2011-045 Plot for Fault 65 – 3-Phase Fault on the Border (523775) to Tuco_Int (525832) 345kV line, near Border (with Tuco – Potter 345 kV Line, WP) 27
Figure 4-3. GEN-2011-058 Plot for Fault 82 – 3-Phase Fault on the GEN-2011-058 (562089) to Grassland (526677) 230kV line, near GEN-2011-058 (SP) 28
Figure 4-4. GEN-2011-058 Plot for Fault 82 – 3-Phase Fault on the GEN-2011-058 (562089) to Grassland (526677) 230kV Line, near GEN-2011-058 (with the Second GEN-2011-058 to Grassland 230 kV Line, SP) 28
Figure 4-5. GEN-2011-045 Plot for Fault 1 – 3-Phase Fault on the Jones_Bus2 (526338) to LP-Holly (522870) 230kV Line, near Jones_Bus2 (SP) 29
Figure 4-6. POI Voltages for Fault 1 – 3-Phase Fault on the Jones_Bus2 (526338) to LP-Holly (522870) 230kV Line, near Jones_Bus2 (SP) 29
Figure 4-7. GEN-2011-046 Plot for Fault 25 – 3-Phase Fault on the Plsnt_Hill (524768) to E_Clovis (524773) 115kV Line, near Plsnt_Hill (SP) 30
Figure 4-8. POI Voltages for Fault 25 – 3-Phase Fault on the Plsnt_Hill (524768) to E_Clovis (524773) 115kV Line, near Plsnt_Hill (SP) 30
Figure 4-9. GEN-2011-048 Plot for Fault 41 – 3-Phase Fault on the Mustang (527149) to Amocowasson (526784) 230kV Line, near Mustang (SP) 31
Figure 4-10. POI Voltages for Fault 41 – 3-Phase Fault on the Mustang (527149) to Amocowasson (526784) 230kV Line, near Mustang (SP) 31
Figure 4-11. GEN-2011-058 Plot for Fault 21 – 3-Phase Fault on the G11-058-TAP (562089) to Borden (526830) 230kV Line, near G11-058-TAP (SP) 32
Figure 4-12. POI Voltages for Fault 21 – 3-Phase Fault on the G11-058-TAP (562089) to Borden (526830) 230kV Line, near G11-058-TAP (SP) 32
Figure 4-13. ASGI-2011-004 Plot for Fault 31 – 3-Phase Fault on the Crosby (525926) to Lubbock_EST (526298) 115kV Line, near Crosby (SP) 33
Figure 4-14. POI Voltages for Fault 31 – 3-Phase Fault on the Crosby (525926) to Lubbock_EST (526298) 115kV Line, near Crosby (SP) 33

List of Tables

Table 1-1. Interconnection Requests Evaluated in this Study 7
Table 1-2. Nearby Interconnection Requests Already in the Queue 8
Table 3-1. Fault Definitions for DISIS-2011-002 Group 6 17
Table 4-1. Summary of Stability Results 24
Table 4-2. Power Factor Requirements [a] 35
Table 5-1. Interconnection Requests Evaluated in this Study 36

0. Certification

I hereby certify that this plan, specification, or report was prepared by me or under my direct supervision and that I am a duly Licensed Professional Engineer under the Laws of the States of **New Mexico and Texas**.

William Quaintance
New Mexico License Number 19505
Texas License Number 104268

Minnesota Excel Engineering
Texas Firm License Number 7970

1. Background and Scope

The DISIS-2011-002 Group 6 Definitive Impact Restudy is a generation interconnection study performed by Excel Engineering, Inc. for its non-affiliated client, Southwest Power Pool (SPP). Its purpose is to study the impacts of interconnecting the projects shown in Table 1-1. The in-service date assumed for the generation addition was 2011.

Table 1-1. Interconnection Requests Evaluated in this Study

Request	Size (MW)	Generator Model	Point of Interconnection	Gen Buses
GEN-2011-045	205 Winter 180 Summer	GENROU	Jones_bus2 230kV (526338)	583050
GEN-2011-046	27 Winter 23 Summer	GENROU	Tucumcari 115kV (524477)	583060
GEN-2011-048	175 Winter 165 Summer	GENROU	Mustang 230kV (527151)	583080
GEN-2011-058	200	SANY SE93 2.0MW	Tap on Grassland to Borden 230kV line (G11_058-TAP, 562089)	583180 583183
ASGI-2011-004	19.2	GE 1.6MW	CROSBY 69kV (525925)	583190

The prior-queued requests shown in Table 1-2 were included in this study and dispatched at 100% of rated capacity.

The study included stability analysis of each proposed interconnection request. Contingencies that resulted in a prior-queued project tripping off-line, if any, were re-run with the prior-queued project's voltage and frequency tripping relays disabled. A power factor analysis was performed for the wind and solar farms in Table 1-1.

ATC (Available Transfer Capability) studies were not performed as part of this study. These studies will be required at the time transmission service is actually requested. Additional transmission upgrades may be required based on that analysis.

Study assumptions in general have been based on Excel's knowledge of the electric power system and on the specific information and data provided by SPP. The accuracy of the conclusions contained within this study is sensitive to the assumptions made with respect to generation additions and transmission improvements being contemplated. Changes in the assumptions of the timing of other generation additions or transmission improvements will affect this study's conclusions.

Table 1-2. Nearby Interconnection Requests Already in the Queue

Request	Size (MW)	Generator Model	Point of Interconnection	Gen Buses
GEN-2001-033	180	Mitsubishi 1000	San Juan Mesa 230kV (524885)	579007 579009 579011 579013 579015 579017 579019 579021
GEN-2001-036	80	CIMTR	Tap on Curry – Tucumcari 115kV line (524502)	524485
GEN-2006-018	167.4	GENSAL	Tuco 230kV (525830)	525841 525842 525843
GEN-2008-008	60	GE 1.5MW	Graham 69kV (526693)	579388
GEN-2008-009	60	GE 1.5MW	San Juan Mesa 230kV (524885)	579392 579393
GEN-2008-014	149.4	Vestas V90	Tap on Tuco – Oklaunion 345kV line (G08-014-POI, 560813)	579409
GEN-2008-016	248.4	Vestas	Grassland 230kV (526677)	579413 579414
GEN-2008-022	300	GE 2.5MW	Tap on Eddy County – Tolk 345kV line (G08-022-POI, 577104)	577100 577110 577120
GEN-2009-067S	20	STCNPG (usrmdl)	Seven Rivers 69kV (528093)	575153
GEN-2010-006	205Winter 180Summer	GENROU	Jones_bus2 230kV(526338)	577300
ASGI-2010-010	42	GENSAL	Lovington 115kV (528334)	575160
ASGI-2010-020	50	Nordex 2.5MW	Tap LE-Tatum to LE-Crsroads 69kV (AS10-020-POI, 580084)	580088
GEN-2010-020	20	STCNPG	Roswell 69kV (527563)	580101
ASGI-2010-021	36.6	Vestas V90 1.8/ Mitsubishi MPS-1000A 1.0MW	Tap LE-Saundrtp to LE-Anderson 69kV (ASGI-021-POI, 580090)	580082 580083
GEN-2010-046	56	GENSAL	Tuco 230kV (525830)	580043
GEN-2010-058	20	STCNPG	Chaves County 115kV (527482)	581158
ASGI-2011-003	10	Sany 2.0MW	Hendricks 69kV (525943)	582600
ASGI-2011-001	28.8	Vestas	Lovington 115kV (528334)	575161
GEN-2011-025	80	GE 1.6MW	Tap on Floyd County - Crosby County 115kV line (G11-025-POI, 581137)	581140

2. Executive Summary

The DISIS-2011-002 Group 6 Definitive Impact Study evaluated the impacts of interconnecting the Table 1-1 study projects to the SPP transmission system.

Initial study results show the system experiencing undamped oscillations in winter peak conditions following fault 65 which is a 3-phase fault on the Border to Tuco 345 kV line.

In order to increase system damping following contingencies, the following system upgrade is required:

- A new 345 kV line from Tuco to Potter

GEN-2011-058 is tripped due to low generator terminal voltage following faults 82 and 83 which are 3-phase and 1-phase faults on the GEN-2011-058 Tap to Grassland 230 kV line.

The following upgrade is required to solve the problem:

- A second 230 kV line from GEN-2011-058 Tap to Grassland

With these upgrades, no stability problems were found for any of the simulated faults. All study projects and prior-queued projects remained stable and on-line following all faults.

Final power factor and capacitor requirements for the Group 6 projects are listed in Table 4-2.

With the assumptions and upgrades described in this report, DISIS-2011-002 Group 6 should be able to connect without causing any stability problems on the SPP transmission grid.

Any change in system or wind farm models or assumptions could change these results.

3. Study Development and Assumptions

3.1 Simulation Tools

The Siemens Power Technologies, Inc. PSS/E power system simulation program Version 30.3.3 was used in this study.

3.2 Models Used

SPP provided its latest stability database cases for both summer and winter peak seasons. These cases included the study and prior-queued projects. Power flow one-line diagrams of the study projects in summer peak conditions are shown in Figure 3-1 through Figure 3-5.

The study plant transmission lines and substation transformers are modeled explicitly in the power flow cases. The wind collector systems and generators are modeled as a single equivalent for each substation transformer. Steady-state and dynamic model data for the study plants are given in Appendix D.

One-line diagrams of the SPP 345 and 230 kV systems in the Group 6 area are shown in Appendix E.

No special modeling is required of line relays in these cases, except for the special modeling related to the wind and solar generation tripping.

3.3 Monitored Facilities

All generators and transmission buses in Areas 520, 524, 525, 526, 531, 534, and 536 were monitored.

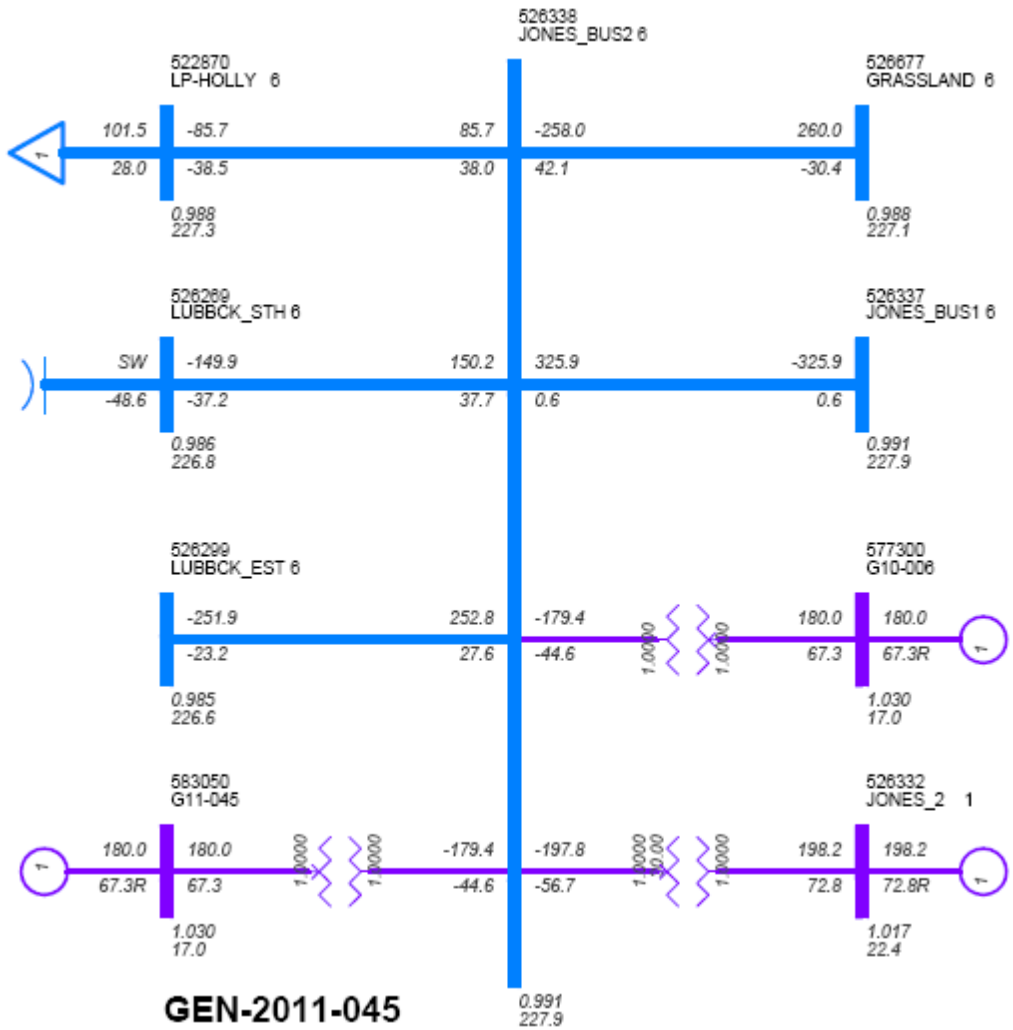

Figure 3-1. Power Flow One-line for GEN-2011-045

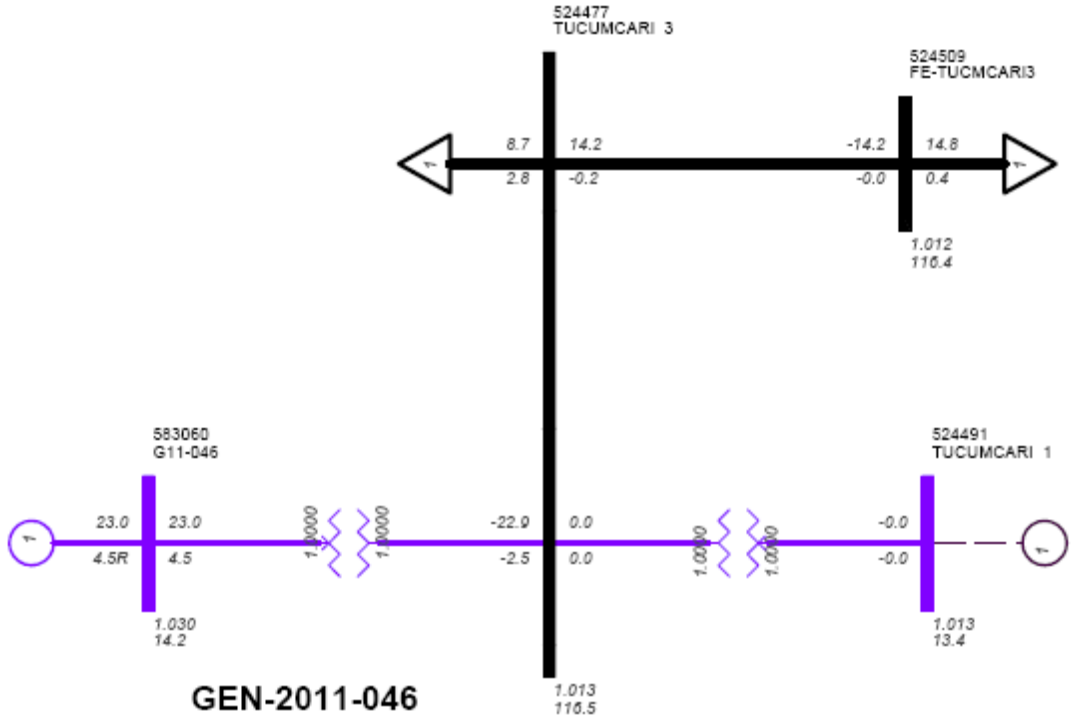

Figure 3-2. Power Flow One-line for GEN-2011-046

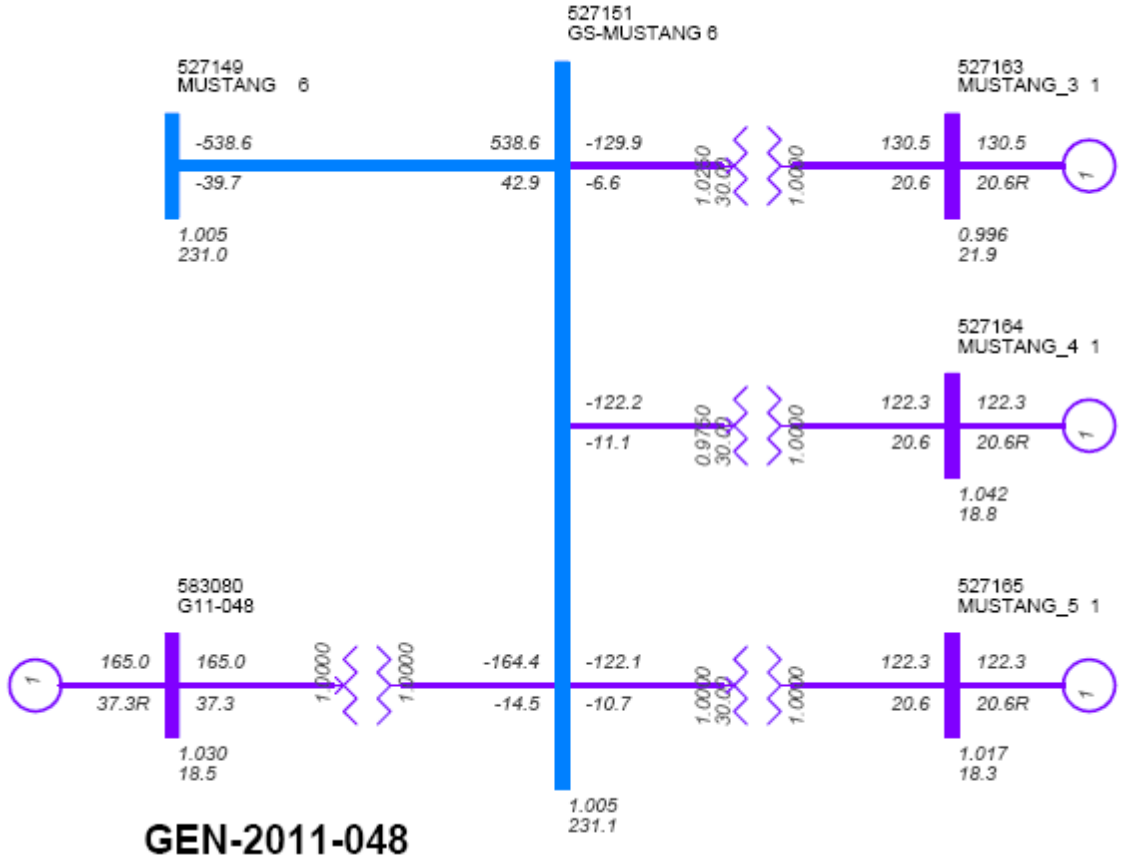

Figure 3-3. Power Flow One-line for GEN-2011-048

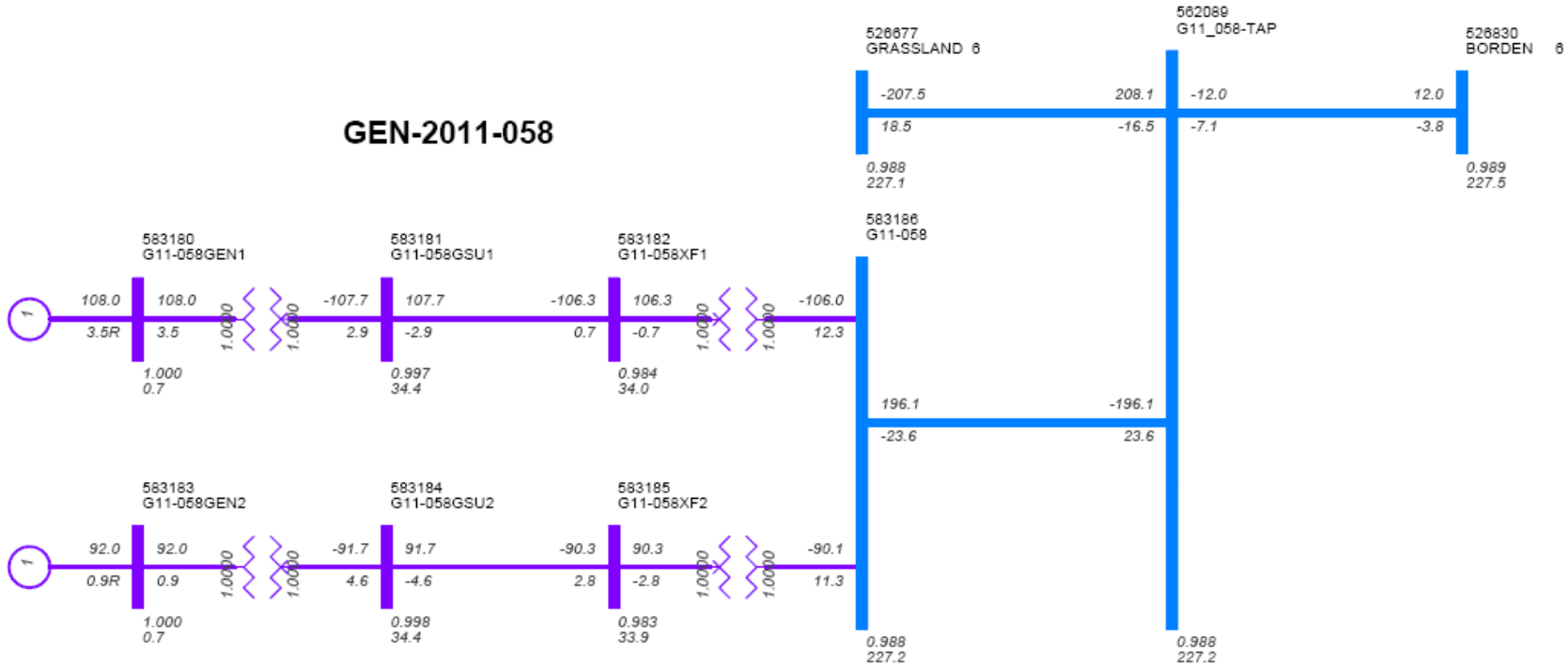

Figure 3-4. Power Flow One-line for GEN-2011-058

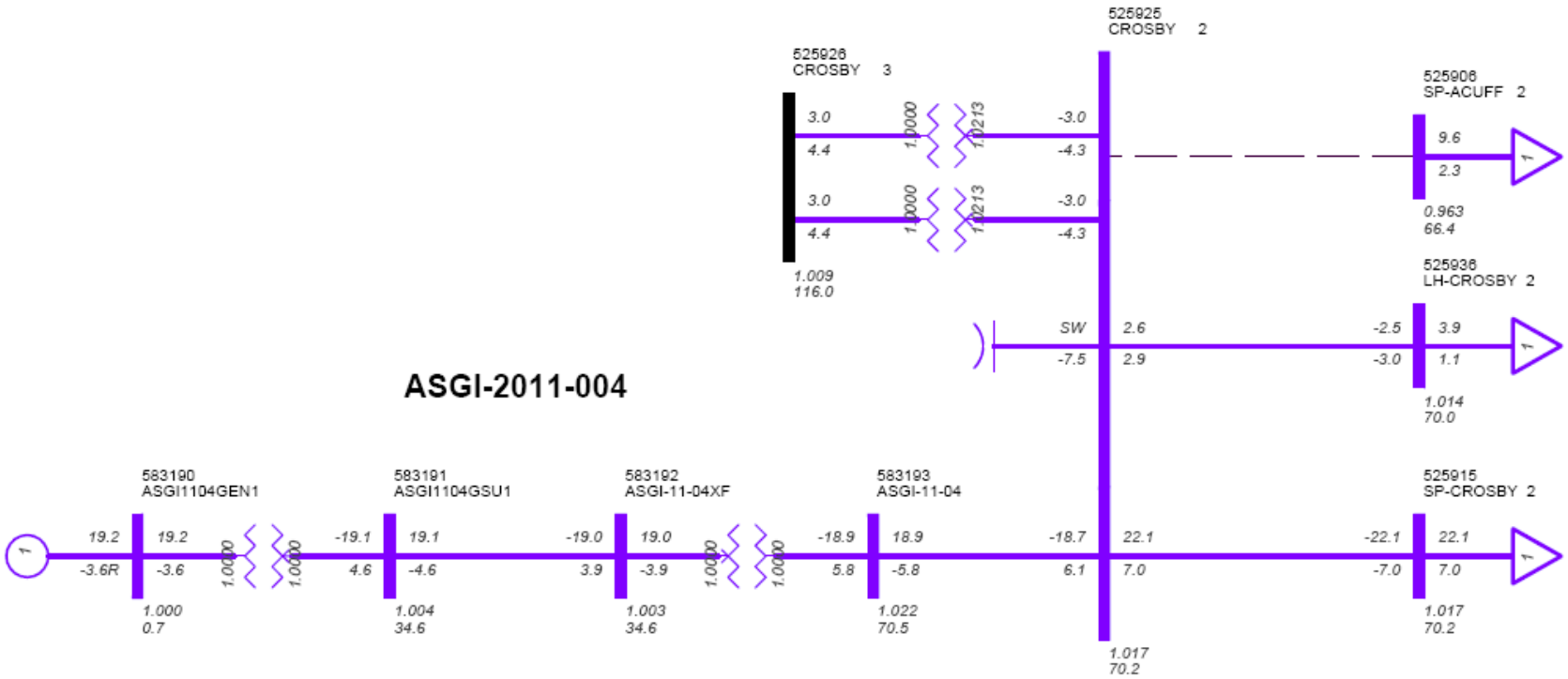

Figure 3-5. Power Flow One-line for ASGI-2011-004

3.4 Performance Criteria

Any wind generators must comply with FERC Order 661A on low voltage ride through for wind farms. Therefore, the wind generators should not trip off line for faults for under voltage relay actuation. If a wind generator trips off line, an appropriately sized SVC or STATCOM device may need to be specified to keep the wind generator on-line for the fault. SPP was consulted to determine if the addition of an SVC or STATCOM is warranted for the specific condition.

Contingencies that resulted in a prior-queued project tripping off-line, if any, were re-run with the prior-queued project's voltage and frequency tripping disabled to check for stability issues.

3.5 Performance Evaluation Methods

A power factor analysis was performed for all study projects that are wind farms. The power factor analysis consisted of modeling a var generator in each wind farm holding a voltage schedule at the POI. The voltage schedule was set to the higher of the voltage with the wind farm off-line or 1.0 per unit.

If the required power factor at the POI is beyond the capability of the studied wind turbines, then capacitor banks would be considered. Factors used in sizing capacitor banks would include two requirements of FERC Order 661A: the ability of the wind farm to ride through low voltage with and without capacitor banks and the ability of the wind farm to recover to pre-fault voltage. If a wind generator trips on high voltage, a leading power factor may be required.

ATC studies were not performed as part of this study. These studies will be required at the time transmission service is actually requested. Additional transmission facilities may be required based on subsequent ATC analysis.

Stability analysis was performed for each proposed interconnection request. Faults were simulated on transmission lines at the POIs and on other nearby transmission equipment. The faults in Table 3-1 were run for each case (three phase and single phase as noted).

Table 3-1. Fault Definitions for DISIS-2011-002 Group 6

Cont. No.	Cont. Name	Description
1	FLT01-3PH	3 phase fault on the Jones_Bus2 (526338) to LP-Holly (522870) 230kV line, near Jones_Bus2. a. Apply fault at the Jones_Bus2 230kV bus. b. Clear fault after 5 cycles by tripping the faulted line. c. Wait 20 cycles, and then re-close the line in (b) back into the fault. d. Leave fault on for 5 cycles, then trip the line in (b) and remove fault.
2	FLT02-1PH	*Single phase fault and sequence like previous*
3	FLT03-3PH	3 phase fault on the Jones_Bus2 (526338) to Lubbock_STH (526269) 230kV line, near Jones_Bus2. a. Apply fault at the Jones_Bus2 230kV bus. b. Clear fault after 5 cycles by tripping the faulted line. c. Wait 20 cycles, and then re-close the line in (b) back into the fault. d. Leave fault on for 5 cycles, then trip the line in (b) and remove fault.
4	FLT04-1PH	*Single phase fault and sequence like previous*
5	FLT05-3PH	3 phase fault on the Jones_Bus2 (526338) to Jones_Bus1 (526337) 230kV line, near Jones_Bus2. a. Apply fault at the Jones_Bus2 230kV bus. b. Clear fault after 5 cycles by tripping the faulted line. c. Wait 20 cycles, and then re-close the line in (b) back into the fault. d. Leave fault on for 5 cycles, then trip the line in (b) and remove fault.
6	FLT06-1PH	*Single phase fault and sequence like previous*
7	FLT07-3PH	3 phase fault on the Jones_Bus2 (526338) to Grassland (526677) 230kV line, near Jones_Bus2. a. Apply fault at the Jones_Bus2 230kV bus. b. Clear fault after 5 cycles by tripping the faulted line. c. Wait 20 cycles, and then re-close the line in (b) back into the fault. d. Leave fault on for 5 cycles, then trip the line in (b) and remove fault.
8	FLT08-1PH	*Single phase fault and sequence like previous*
9	FLT09-3PH	3 phase fault on the Lubbock_STH (526269) to Jones_Bus1 (526337) 230kV line, near Lubbock_STH. a. Apply fault at the Lubbock_STH 230kV bus. b. Clear fault after 5 cycles by tripping the faulted line. c. Wait 20 cycles, and then re-close the line in (b) back into the fault. d. Leave fault on for 5 cycles, then trip the line in (b) and remove fault.
10	FLT10-1PH	*Single phase fault and sequence like previous*
11	FLT11-3PH	3 phase fault on the Lubbock_STH (526269) to Wolfforth (526525) 230kV line, near Lubbock_STH. a. Apply fault at the Lubbock_STH 230kV bus. b. Clear fault after 5 cycles by tripping the faulted line. c. Wait 20 cycles, and then re-close the line in (b) back into the fault. d. Leave fault on for 5 cycles, then trip the line in (b) and remove fault.
12	FLT12-1PH	*Single phase fault and sequence like previous*
13	FLT13-3PH	3 phase fault on the Lubbock_STH (526269) to LP-Southest (522861) 230kV line, near Lubbock_STH. a. Apply fault at the Lubbock_STH 230kV bus. b. Clear fault after 5 cycles by tripping the faulted line. c. Wait 20 cycles, and then re-close the line in (b) back into the fault. d. Leave fault on for 5 cycles, then trip the line in (b) and remove fault.
14	FLT14-1PH	*Single phase fault and sequence like previous*

Cont. No.	Cont. Name	Description
15	FLT15-3PH	3 phase fault on the Lubbock_EST (526299) to LP-Wadswrth (522888) 230kV line, near Lubbock_ EST. a. Apply fault at the Lubbock_ EST 230kV bus. b. Clear fault after 5 cycles by tripping the faulted line. c. Wait 20 cycles, and then re-close the line in (b) back into the fault. d. Leave fault on for 5 cycles, then trip the line in (b) and remove fault.
16	FLT16-1PH	*Single phase fault and sequence like previous*
17	FLT17-3PH	3 phase fault on the Jones_Bus1 (526337) to Tuco_Int (525830) 230kV line, near Jones_Bus1. a. Apply fault at the Jones_Bus1 230kV bus. b. Clear fault after 5 cycles by tripping the faulted line. c. Wait 20 cycles, and then re-close the line in (b) back into the fault. d. Leave fault on for 5 cycles, then trip the line in (b) and remove fault.
18	FLT18-1PH	*Single phase fault and sequence like previous*
19	FLT19-3PH	3 phase fault on the Grassland (526677) to Wolfforth (526525) 230kV line, near Grassland. a. Apply fault at the Grassland 230kV bus. b. Clear fault after 5 cycles by tripping the faulted line. c. Wait 20 cycles, and then re-close the line in (b) back into the fault. d. Leave fault on for 5 cycles, then trip the line in (b) and remove fault.
20	FLT20-1PH	*Single phase fault and sequence like previous*
21	FLT21-3PH	3 phase fault on the G11-058-TAP (562089) to Borden (526830) 230kV line, near G11-058-TAP. a. Apply fault at the G11-058-TAP 230kV bus. b. Clear fault after 5 cycles by tripping the faulted line. c. Wait 20 cycles, and then re-close the line in (b) back into the fault. d. Leave fault on for 5 cycles, then trip the line in (b) and remove fault.
22	FLT22-1PH	*Single phase fault and sequence like previous*
23	FLT23-3PH	3 phase fault on the Norton (524502) to Plsnt_Hill (524768) 115kV line, near Norton. a. Apply fault at the Norton 115kV bus. b. Clear fault after 5 cycles by tripping the faulted line.
24	FLT24-1PH	*Single phase fault and sequence like previous*
25	FLT25-3PH	3 phase fault on the Plsnt_Hill (524768) to E_Clovis (524773) 115kV line, near Plsnt_Hill. a. Apply fault at the Plsnt_Hill 115kV bus. b. Clear fault after 5 cycles by tripping the faulted line. c. Wait 20 cycles, and then re-close the line in (b) back into the fault. d. Leave fault on for 5 cycles, then trip the line in (b) and remove fault.
26	FLT26-1PH	*Single phase fault and sequence like previous*
27	FLT27-3PH	3 phase fault on the Plsnt_Hill (524768) to N_Clovis_TP (524777) 115kV line, near Plsnt_Hill. a. Apply fault at the Plsnt_Hill 115kV bus. b. Clear fault after 5 cycles by tripping the faulted line. c. Wait 20 cycles, and then re-close the line in (b) back into the fault. d. Leave fault on for 5 cycles, then trip the line in (b) and remove fault.
28	FLT28-1PH	*Single phase fault and sequence like previous*
29	FLT29-3PH	3 phase fault on the Plsnt_Hill (524768) to FE_Holland (524831) 115kV line, near Plsnt_Hill. a. Apply fault at the Plsnt_Hill 115kV bus. b. Clear fault after 5 cycles by tripping the faulted line. c. Wait 20 cycles, and then re-close the line in (b) back into the fault. d. Leave fault on for 5 cycles, then trip the line in (b) and remove fault.
30	FLT30-1PH	*Single phase fault and sequence like previous*

Cont. No.	Cont. Name	Description
31	FLT31-3PH	3 phase fault on the Crosby (525926) to Lubbock_EST (526298) 115kV line, near Crosby. a. Apply fault at the Crosby 115kV bus. b. Clear fault after 5 cycles by tripping the faulted line. c. Wait 20 cycles, and then re-close the line in (b) back into the fault. d. Leave fault on for 5 cycles, then trip the line in (b) and remove fault.
32	FLT32-1PH	*Single phase fault and sequence like previous*
33	FLT33-3PH	3 phase fault on the Crosby (525926) to G11-025-POI (581137) 115kV line, near Crosby. a. Apply fault at the Crosby 115kV bus. b. Clear fault after 5 cycles by tripping the faulted line. c. Wait 20 cycles, and then re-close the line in (b) back into the fault. d. Leave fault on for 5 cycles, then trip the line in (b) and remove fault.
34	FLT34-1PH	*Single phase fault and sequence like previous*
35	FLT35-3PH	3 phase fault on the G11-025-POI (581137) to Flyod_Cnty (525780) 115kV line, near G11-025-POI. a. Apply fault at the G11-025-POI 115kV bus. b. Clear fault after 5 cycles by tripping the faulted line. c. Wait 20 cycles, and then re-close the line in (b) back into the fault. d. Leave fault on for 5 cycles, then trip the line in (b) and remove fault.
36	FLT36-1PH	*Single phase fault and sequence like previous*
37	FLT37-3PH	3 phase fault on the Lubbock_EST (526298) to Tuco_Int (525828) 115kV line, near Lubbock_EST. a. Apply fault at the Lubbock_EST 115kV bus. b. Clear fault after 5 cycles by tripping the faulted line. c. Wait 20 cycles, and then re-close the line in (b) back into the fault. d. Leave fault on for 5 cycles, then trip the line in (b) and remove fault.
38	FLT38-1PH	*Single phase fault and sequence like previous*
39	FLT39-3PH	3 phase fault on the Lubbock_EST (526298) to Lubbock_STH (526268) 115kV line, near Lubbock_EST. a. Apply fault at the Lubbock_EST 115kV bus. b. Clear fault after 5 cycles by tripping the faulted line. c. Wait 20 cycles, and then re-close the line in (b) back into the fault. d. Leave fault on for 5 cycles, then trip the line in (b) and remove fault.
40	FLT40-1PH	*Single phase fault and sequence like previous*
41	FLT41-3PH	3 phase fault on the Mustang (527149) to Amocowasson (526784) 230kV line, near Mustang. a. Apply fault at the Mustang 230kV bus. b. Clear fault after 5 cycles by tripping the faulted line. c. Wait 20 cycles, and then re-close the line in (b) back into the fault. d. Leave fault on for 5 cycles, then trip the line in (b) and remove fault.
42	FLT42-1PH	*Single phase fault and sequence like previous*
43	FLT43-3PH	3 phase fault on the Mustang (527149) to Yoakum (526935) 230kV line, near Mustang. a. Apply fault at the Mustang 230kV bus. b. Clear fault after 5 cycles by tripping the faulted line. c. Wait 20 cycles, and then re-close the line in (b) back into the fault. d. Leave fault on for 5 cycles, then trip the line in (b) and remove fault.
44	FLT44-1PH	*Single phase fault and sequence like previous*
45	FLT45-3PH	3 phase fault on the Mustang (527149) to Seminole (527276) 230kV line, near Mustang. a. Apply fault at the Mustang 230kV bus. b. Clear fault after 5 cycles by tripping the faulted line. c. Wait 20 cycles, and then re-close the line in (b) back into the fault. d. Leave fault on for 5 cycles, then trip the line in (b) and remove fault.

Cont. No.	Cont. Name	Description
46	FLT46-1PH	*Single phase fault and sequence like previous*
47	FLT47-3PH	3 phase fault on the Amocowasson (526784) to Yoakum (526935) 230kV line, near Amocowasson. a. Apply fault at the Amocowasson 230kV bus. b. Clear fault after 5 cycles by tripping the faulted line. c. Wait 20 cycles, and then re-close the line in (b) back into the fault. d. Leave fault on for 5 cycles, then trip the line in (b) and remove fault.
48	FLT48-1PH	*Single phase fault and sequence like previous*
49	FLT49-3PH	3 phase fault on the Yoakum (526935) to Tolk_West (525531) 230kV line, near Yoakum. a. Apply fault at the Yoakum 230kV bus. b. Clear fault after 5 cycles by tripping the faulted line. c. Wait 20 cycles, and then re-close the line in (b) back into the fault. d. Leave fault on for 5 cycles, then trip the line in (b) and remove fault.
50	FLT50-1PH	*Single phase fault and sequence like previous*
51	FLT51-3PH	3 phase fault on the Yoakum (526935) to Tolk_West (525531) 230kV line, near Yoakum. a. Apply fault at the Yoakum 230kV bus. b. Clear fault after 5 cycles by tripping the faulted line. c. Wait 20 cycles, and then re-close the line in (b) back into the fault. d. Leave fault on for 5 cycles, then trip the line in (b) and remove fault.
52	FLT52-1PH	*Single phase fault and sequence like previous*
53	FLT53-3PH	3 phase fault on the Yoakum (526935) to Amoco_SS (526460) 230kV line, near Yoakum. a. Apply fault at the Yoakum 230kV bus. b. Clear fault after 5 cycles by tripping the faulted line. c. Wait 20 cycles, and then re-close the line in (b) back into the fault. d. Leave fault on for 5 cycles, then trip the line in (b) and remove fault.
54	FLT54-1PH	*Single phase fault and sequence like previous*
55	FLT55-3PH	3 phase fault on the Yoakum (526935) to Lea_Cnty (527849) 230kV line, near Yoakum. a. Apply fault at the Yoakum 230kV bus. b. Clear fault after 5 cycles by tripping the faulted line. c. Wait 20 cycles, and then re-close the line in (b) back into the fault. d. Leave fault on for 5 cycles, then trip the line in (b) and remove fault.
56	FLT56-1PH	*Single phase fault and sequence like previous*
57	FLT57-3PH	3 phase fault on the Mustang (527146) to Denver_N (527130) 115kV line, near Mustang. a. Apply fault at the Mustang 115kV bus. b. Clear fault after 5 cycles by tripping the faulted line. c. Wait 20 cycles, and then re-close the line in (b) back into the fault. d. Leave fault on for 5 cycles, then trip the line in (b) and remove fault.
58	FLT58-1PH	*Single phase fault and sequence like previous*
59	FLT59-3PH	3 phase fault on the Mustang (527146) to Denver_S (527136) 115kV line, ckt2, near Mustang. a. Apply fault at the Mustang 115kV bus. b. Clear fault after 5 cycles by tripping the faulted line. c. Wait 20 cycles, and then re-close the line in (b) back into the fault. d. Leave fault on for 5 cycles, then trip the line in (b) and remove fault.
60	FLT60-1PH	*Single phase fault and sequence like previous*
61	FLT61-3PH	3 phase fault on the Mustang (527146) to Seagraves (527202) 115kV line, near Mustang. a. Apply fault at the Mustang 115kV bus. b. Clear fault after 5 cycles by tripping the faulted line. c. Wait 20 cycles, and then re-close the line in (b) back into the fault. d. Leave fault on for 5 cycles, then trip the line in (b) and remove fault.

Cont. No.	Cont. Name	Description
62	FLT62-1PH	*Single phase fault and sequence like previous*
63	FLT63-3PH	3 phase fault on the Border (523775) to Woodward (523775) 345kV line, near Border. a. Apply fault at the Border 345kV bus. b. Clear fault after 5 cycles by tripping the faulted line. c. Wait 20 cycles, and then re-close the line in (b) back into the fault. d. Leave fault on for 5 cycles, then trip the line in (b) and remove fault.
64	FLT64-3PH	3 phase fault on the Border (523775) to Hitchland (523097) 345kV line, near Border. a. Apply fault at the Border 345kV bus. b. Clear fault after 5 cycles by tripping the faulted line. c. Wait 20 cycles, and then re-close the line in (b) back into the fault. d. Leave fault on for 5 cycles, then trip the line in (b) and remove fault.
65	FLT65-3PH	3 phase fault on the Border (523775) to Tuco_Int (525832) 345kV line, near Border. a. Apply fault at the Border 345kV bus. b. Clear fault after 5 cycles by tripping the faulted line. c. Wait 20 cycles, and then re-close the line in (b) back into the fault. d. Leave fault on for 5 cycles, then trip the line in (b) and remove fault.
66	FLT66-3PH	3 phase fault on the Woodward (515375) to Thistle (539801) 345kV line, ckt1, near Woodward. a. Apply fault at the Woodward 345kV bus. b. Clear fault after 5 cycles by tripping the faulted line. c. Wait 20 cycles, and then re-close the line in (b) back into the fault. d. Leave fault on for 5 cycles, then trip the line in (b) and remove fault.
67	FLT67-3PH	3 phase fault on the Woodward (515375) to Mooreland (560304) 345kV line, ckt1, near Woodward. a. Apply fault at the Woodward 345kV bus. b. Clear fault after 5 cycles by tripping the faulted line. c. Wait 20 cycles, and then re-close the line in (b) back into the fault. d. Leave fault on for 5 cycles, then trip the line in (b) and remove fault.
68	FLT68-3PH	3 phase fault on the Woodward (515375) to Beaver County (580500) 345kV line, ckt1, near Woodward. a. Apply fault at the Woodward 345kV bus. b. Clear fault after 5 cycles by tripping the faulted line. c. Wait 20 cycles, and then re-close the line in (b) back into the fault. d. Leave fault on for 5 cycles, then trip the line in (b) and remove fault.
69	FLT69-3PH	3 phase fault on the Woodward (515375) to G11-051-Tap (562075) 345kV line, near Woodward. a. Apply fault at the Woodward 345kV bus. b. Clear fault after 5 cycles by tripping the faulted line. c. Wait 20 cycles, and then re-close the line in (b) back into the fault. d. Leave fault on for 5 cycles, then trip the line in (b) and remove fault.
70	FLT70-3PH	3 phase fault on the Hitchland (523097) to Stevens (560029) 345kV line, near Hitchland. a. Apply fault at the Hitchland 345kV bus. b. Clear fault after 5 cycles by tripping the faulted line. c. Wait 20 cycles, and then re-close the line in (b) back into the fault. d. Leave fault on for 5 cycles, then trip the line in (b) and remove fault.
71	FLT71-3PH	3 phase fault on the Hitchland (523097) to G05-017-POI (579118) 345kV line, near Hitchland. a. Apply fault at the Hitchland 345kV bus. b. Clear fault after 5 cycles by tripping the faulted line. c. Wait 20 cycles, and then re-close the line in (b) back into the fault. d. Leave fault on for 5 cycles, then trip the line in (b) and remove fault.

Cont. No.	Cont. Name	Description
72	FLT72-3PH	3 phase fault on the Hitchland (523097) to Beaver County (580500) 345kV line, near Hitchland. a. Apply fault at the Hitchland 345kV bus. b. Clear fault after 5 cycles by tripping the faulted line. c. Wait 20 cycles, and then re-close the line in (b) back into the fault. d. Leave fault on for 5 cycles, then trip the line in (b) and remove fault.
73	FLT73-3PH	3 phase fault on the Tuco_Int (525832) to G08-014-POI (560813) 345kV line, near Tuco_Int. a. Apply fault at the Tuco_Int 345kV bus. b. Clear fault after 5 cycles by tripping the faulted line. c. Wait 20 cycles, and then re-close the line in (b) back into the fault. d. Leave fault on for 5 cycles, then trip the line in (b) and remove fault.
74	FLT74-3PH	3 phase fault on the Lubbock_EST 230kV (526299) to Lubbock_EST 115kV (526298) transformer, near the 230kV bus. a. Apply fault at the Lubbock_EST 230kV bus. b. Clear fault after 5 cycles by tripping the faulted transformer.
75	FLT75-3PH	3 phase fault on the Grassland 230kV (526677) to Grassland 115kV (526676) transformer, near the 230kV bus. a. Apply fault at the Grassland 230kV bus. b. Clear fault after 5 cycles by tripping the faulted transformer.
76	FLT76-3PH	3 phase fault on the Borden 230kV (526830) to CR-Vealmoor 138kV (522896) transformer, near the 230kV bus. a. Apply fault at the Borden 230kV bus. b. Clear fault after 5 cycles by tripping the faulted transformer.
77	FLT77-3PH	3 phase fault on the Plsnt_Hill 230kV (524770) to Plsnt_Hill 115kV (524768) transformer, near the 230kV bus. a. Apply fault at the Plsnt_Hill 230kV bus. b. Clear fault after 5 cycles by tripping the faulted transformer.
78	FLT78-3PH	3 phase fault on the Crosby 115kV (525926) to Crosby 69kV (525925) transformer, ckt1, near the 115kV bus. a. Apply fault at the Crosby 115kV bus. b. Clear fault after 5 cycles by tripping the faulted transformer.
79	FLT79-3PH	3 phase fault on the Mustang 230kV (527149) to Mustang 115kV (527146) transformer, ckt1, near the 230kV bus. a. Apply fault at the Mustang 230kV bus. b. Clear fault after 5 cycles by tripping the faulted transformer.
80	FLT80-3PH	3 phase fault on the Yoakum 230kV (526935) to Yoakum 115kV (526934) transformer, ckt2, near the 230kV bus. a. Apply fault at the Yoakum 230kV bus. b. Clear fault after 5 cycles by tripping the faulted transformer.
81	FLT81-3PH	3 phase fault on the Seminole 230kV (527276) to Seminole 115kV (527275) transformer, ckt2, near the 230kV bus. a. Apply fault at the Seminole 230kV bus. b. Clear fault after 5 cycles by tripping the faulted transformer.
82	FLT82-3PH	3 phase fault on the GEN-2011-058 (562089) to Grassland (526677) 230kV line, near GEN-2011-058. a. Apply fault at the GEN-2011-058 230kV bus. b. Clear fault after 5 cycles by tripping the faulted line. c. Wait 20 cycles, and then re-close the line in (b) back into the fault. d. Leave fault on for 5 cycles, then trip the line in (b) and remove fault.
83	FLT83-1PH	*Single phase fault and sequence like previous*

4. Results and Observations

4.1 Stability Analysis Results

Initial study results show the system experiencing undamped oscillations in winter peak conditions following fault 65 which is a 3-phase fault on the Border to Tuco 345 kV line. Figure 4-1 shows plots for GEN-2011-045 following fault 65 in winter peak conditions.

In order to increase system damping following contingencies, the following system upgrade was tested:

- A new 345 kV line from Tuco to Potter

With this upgrade, the system is stable following fault 65. Figure 4-2 shows plots for GEN-2011-045 following fault 65 in winter peak conditions.

GEN-2011-058 is tripped due to low generator terminal voltage following faults 82 and 83 which are 3-phase and 1-phase faults on the GEN-2011-058 Tap to Grassland 230 kV line. Figure 4-3 shows plots for GEN-2011-058 following fault 82 in summer peak conditions.

The following upgrade is tested to solve the problem:

- A second 230 kV line from GEN-2011-058 Tap to Grassland

With this upgrade, the system is stable and GEN-2011-058 remains on-line following faults 82 and 83. Figure 4-4 shows plots for GEN-2011-058 following fault 82 in summer peak conditions.

Table 4-1 summarizes the final results. Figure 4-5 through Figure 4-14 show representative summer peak season plots for faults at the POI's of the study projects. Complete sets of plots for both summer and winter peak seasons for each fault and each project are included in Appendices A and B.

All of the simulations performed well. No plants tripped and none went unstable for any of the simulated faults.

Table 4-1. Summary of Stability Results

Cont. No.	Cont. Name	Description	Summer Peak Results	Winter Peak Results
1	FLT01-3PH	3 phase fault on the Jones_Bus2 (526338) to LP-Holly (522870) 230kV line, near Jones_Bus2.	OK	OK
2	FLT02-1PH	*Single phase fault and sequence like previous*	OK	OK
3	FLT03-3PH	3 phase fault on the Jones_Bus2 (526338) to Lubbock_STH (526269) 230kV line, near Jones_Bus2.	OK	OK
4	FLT04-1PH	*Single phase fault and sequence like previous*	OK	OK
5	FLT05-3PH	3 phase fault on the Jones_Bus2 (526338) to Jones_Bus1 (526337) 230kV line, near Jones_Bus2.	OK	OK
6	FLT06-1PH	*Single phase fault and sequence like previous*	OK	OK
7	FLT07-3PH	3 phase fault on the Jones_Bus2 (526338) to Grassland (526677) 230kV line, near Jones_Bus2.	OK	OK
8	FLT08-1PH	*Single phase fault and sequence like previous*	OK	OK
9	FLT09-3PH	3 phase fault on the Lubbock_STH (526269) to Jones_Bus1 (526337) 230kV line, near Lubbock_STH.	OK	OK
10	FLT10-1PH	*Single phase fault and sequence like previous*	OK	OK
11	FLT11-3PH	3 phase fault on the Lubbock_STH (526269) to Wolfforth (526525) 230kV line, near Lubbock_STH.	OK	OK
12	FLT12-1PH	*Single phase fault and sequence like previous*	OK	OK
13	FLT13-3PH	3 phase fault on the Lubbock_STH (526269) to LP-Southest (522861) 230kV line, near Lubbock_STH.	OK	OK
14	FLT14-1PH	*Single phase fault and sequence like previous*	OK	OK
15	FLT15-3PH	3 phase fault on the Lubbock_EST (526299) to LP-Wadswrth (522888) 230kV line, near Lubbock_ EST.	OK	OK
16	FLT16-1PH	*Single phase fault and sequence like previous*	OK	OK
17	FLT17-3PH	3 phase fault on the Jones_Bus1 (526337) to Tuco_Int (525830) 230kV line, near Jones_Bus1.	OK	OK
18	FLT18-1PH	*Single phase fault and sequence like previous*	OK	OK
19	FLT19-3PH	3 phase fault on the Grassland (526677) to Wolfforth (526525) 230kV line, near Grassland.	OK	OK
20	FLT20-1PH	*Single phase fault and sequence like previous*	OK	OK
21	FLT21-3PH	3 phase fault on the G11-058-TAP (562089) to Borden (526830) 230kV line, near G11-058-TAP.	OK	OK
22	FLT22-1PH	*Single phase fault and sequence like previous*	OK	OK
23	FLT23-3PH	3 phase fault on the Norton (524502) to Plsnt_Hill (524768) 115kV line, near Norton.	OK	OK
24	FLT24-1PH	*Single phase fault and sequence like previous*	OK	OK
25	FLT25-3PH	3 phase fault on the Plsnt_Hill (524768) to E_Clovis (524773) 115kV line, near Plsnt_Hill.	OK	OK
26	FLT26-1PH	*Single phase fault and sequence like previous*	OK	OK
27	FLT27-3PH	3 phase fault on the Plsnt_Hill (524768) to N_Clovis_TP (524777) 115kV line, near Plsnt_Hill.	OK	OK
28	FLT28-1PH	*Single phase fault and sequence like previous*	OK	OK
29	FLT29-3PH	3 phase fault on the Plsnt_Hill (524768) to FE_Holland (524831) 115kV line, near Plsnt_Hill.	OK	OK
30	FLT30-1PH	*Single phase fault and sequence like previous*	OK	OK

Cont. No.	Cont. Name	Description	Summer Peak Results	Winter Peak Results
31	FLT31-3PH	3 phase fault on the Crosby (525926) to Lubbock_EST (526298) 115kV line, near Crosby.	OK	OK
32	FLT32-1PH	*Single phase fault and sequence like previous*	OK	OK
33	FLT33-3PH	3 phase fault on the Crosby (525926) to G11-025-POI (581137) 115kV line, near Crosby.	OK	OK
34	FLT34-1PH	*Single phase fault and sequence like previous*	OK	OK
35	FLT35-3PH	3 phase fault on the G11-025-POI (581137) to Flyod_Cnty (525780) 115kV line, near G11-025-POI.	OK	OK
36	FLT36-1PH	*Single phase fault and sequence like previous*	OK	OK
37	FLT37-3PH	3 phase fault on the Lubbock_EST (526298) to Tuco_Int (525828) 115kV line, near Lubbock_EST.	OK	OK
38	FLT38-1PH	*Single phase fault and sequence like previous*	OK	OK
39	FLT39-3PH	3 phase fault on the Lubbock_EST (526298) to Lubbock_STH (526268) 115kV line, near Lubbock_EST.	OK	OK
40	FLT40-1PH	*Single phase fault and sequence like previous*	OK	OK
41	FLT41-3PH	3 phase fault on the Mustang (527149) to Amocowasson (526784) 230kV line, near Mustang.	OK	OK
42	FLT42-1PH	*Single phase fault and sequence like previous*	OK	OK
43	FLT43-3PH	3 phase fault on the Mustang (527149) to Yoakum (526935) 230kV line, near Mustang.	OK	OK
44	FLT44-1PH	*Single phase fault and sequence like previous*	OK	OK
45	FLT45-3PH	3 phase fault on the Mustang (527149) to Seminole (527276) 230kV line, near Mustang.	OK	OK
46	FLT46-1PH	*Single phase fault and sequence like previous*	OK	OK
47	FLT47-3PH	3 phase fault on the Amocowasson (526784) to Yoakum (526935) 230kV line, near Amocowasson.	OK	OK
48	FLT48-1PH	*Single phase fault and sequence like previous*	OK	OK
49	FLT49-3PH	3 phase fault on the Yoakum (526935) to Tolk_West (525531) 230kV line, near Yoakum.	OK	OK
50	FLT50-1PH	*Single phase fault and sequence like previous*	OK	OK
51	FLT51-3PH	3 phase fault on the Yoakum (526935) to Tolk_West (525531) 230kV line, near Yoakum.	OK	OK
52	FLT52-1PH	*Single phase fault and sequence like previous*	OK	OK
53	FLT53-3PH	3 phase fault on the Yoakum (526935) to Amoco_SS (526460) 230kV line, near Yoakum.	OK	OK
54	FLT54-1PH	*Single phase fault and sequence like previous*	OK	OK
55	FLT55-3PH	3 phase fault on the Yoakum (526935) to Lea_Cnty (527849) 230kV line, near Yoakum.	OK	OK
56	FLT56-1PH	*Single phase fault and sequence like previous*	OK	OK
57	FLT57-3PH	3 phase fault on the Mustang (527146) to Denver_N (527130) 115kV line, near Mustang.	OK	OK
58	FLT58-1PH	*Single phase fault and sequence like previous*	OK	OK
59	FLT59-3PH	3 phase fault on the Mustang (527146) to Denver_S (527136) 115kV line, ckt2, near Mustang.	OK	OK
60	FLT60-1PH	*Single phase fault and sequence like previous*	OK	OK

Cont. No.	Cont. Name	Description	Summer Peak Results	Winter Peak Results
61	FLT61-3PH	3 phase fault on the Mustang (527146) to Seagraves (527202) 115kV line, near Mustang.	OK	OK
62	FLT62-1PH	*Single phase fault and sequence like previous*	OK	OK
63	FLT63-3PH	3 phase fault on the Border (523775) to Woodward (523775) 345kV line, near Border.	OK	OK
64	FLT64-3PH	3 phase fault on the Border (523775) to Hitchland (523097) 345kV line, near Border.	OK	OK
65	FLT65-3PH	3 phase fault on the Border (523775) to Tuco_Int (525832) 345kV line, near Border.	OK	OK
66	FLT66-3PH	3 phase fault on the Woodward (515375) to Thistle (539801) 345kV line, ckt1, near Woodward.	OK	OK
67	FLT67-3PH	3 phase fault on the Woodward (515375) to Mooreland (560304) 345kV line, ckt1, near Woodward.	OK	OK
68	FLT68-3PH	3 phase fault on the Woodward (515375) to Beaver County (580500) 345kV line, ckt1, near Woodward.	OK	OK
69	FLT69-3PH	3 phase fault on the Woodward (515375) to G11-051-Tap (562075) 345kV line, near Woodward.	OK	OK
70	FLT70-3PH	3 phase fault on the Hitchland (523097) to Stevens (560029) 345kV line, near Hitchland.	OK	OK
71	FLT71-3PH	3 phase fault on the Hitchland (523097) to G05-017-POI (579118) 345kV line, near Hitchland.	OK	OK
72	FLT72-3PH	3 phase fault on the Hitchland (523097) to Beaver County (580500) 345kV line, near Hitchland.	OK	OK
73	FLT73-3PH	3 phase fault on the Tuco_Int (525832) to G08-014-POI (560813) 345kV line, near Tuco_Int.	OK	OK
74	FLT74-3PH	3 phase fault on the Lubbock_EST 230kV (526299) to Lubbock_EST 115kV (526298) transformer, near the 230kV bus.	OK	OK
75	FLT75-3PH	3 phase fault on the Grassland 230kV (526677) to Grassland 115kV (526676) transformer, near the 230kV bus.	OK	OK
76	FLT76-3PH	3 phase fault on the Borden 230kV (526830) to CR-Vealmoor 138kV (522896) transformer, near the 230kV bus.	OK	OK
77	FLT77-3PH	3 phase fault on the Plsnt_Hill 230kV (524770) to Plsnt_Hill 115kV (524768) transformer, near the 230kV bus.	OK	OK
78	FLT78-3PH	3 phase fault on the Crosby 115kV (525926) to Crosby 69kV (525925) transformer, ckt1, near the 115kV bus.	OK	OK
79	FLT79-3PH	3 phase fault on the Mustang 230kV (527149) to Mustang 115kV (527146) transformer, ckt1, near the 230kV bus.	OK	OK
80	FLT80-3PH	3 phase fault on the Yoakum 230kV (526935) to Yoakum 115kV (526934) transformer, ckt2, near the 230kV bus.	OK	OK
81	FLT81-3PH	3 phase fault on the Seminole 230kV (527276) to Seminole 115kV (527275) transformer, ckt2, near the 230kV bus.	OK	OK
82	FLT82-3PH	3 phase fault on the GEN-2011-058 (562089) to Grassland (526677) 230kV line, near GEN-2011-058.	OK	OK
83	FLT83-1PH	*Single phase fault and sequence like previous*	OK	OK

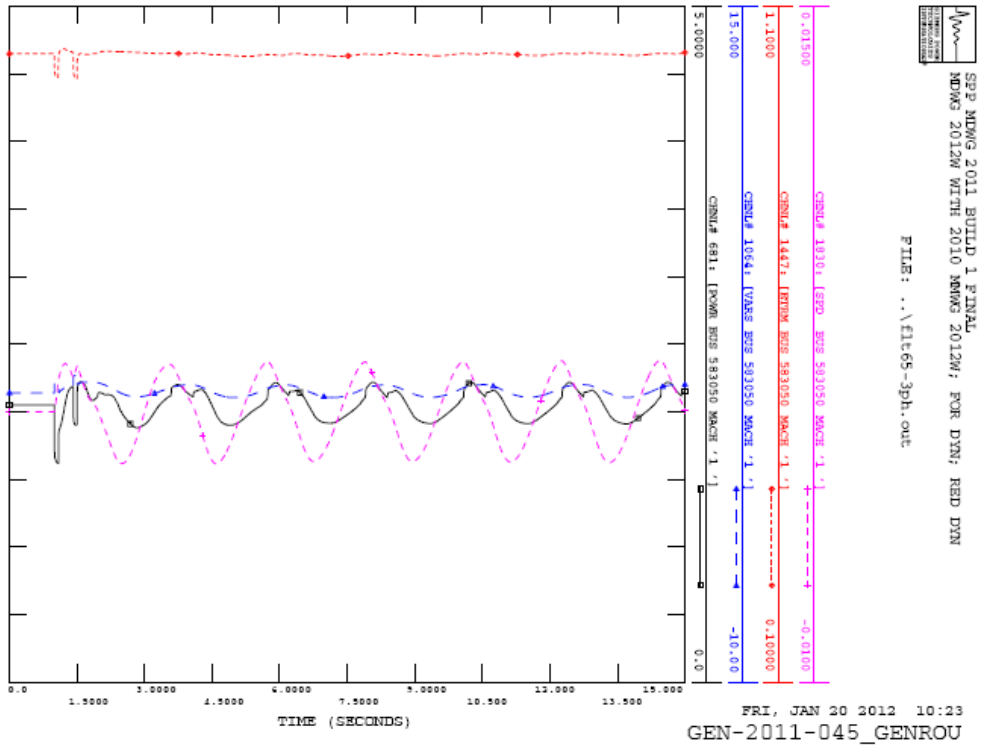

Figure 4-1. GEN-2011-045 Plot for Fault 65 – 3-Phase Fault on the Border (523775) to Tuco_Int (525832) 345kV line, near Border (WP)

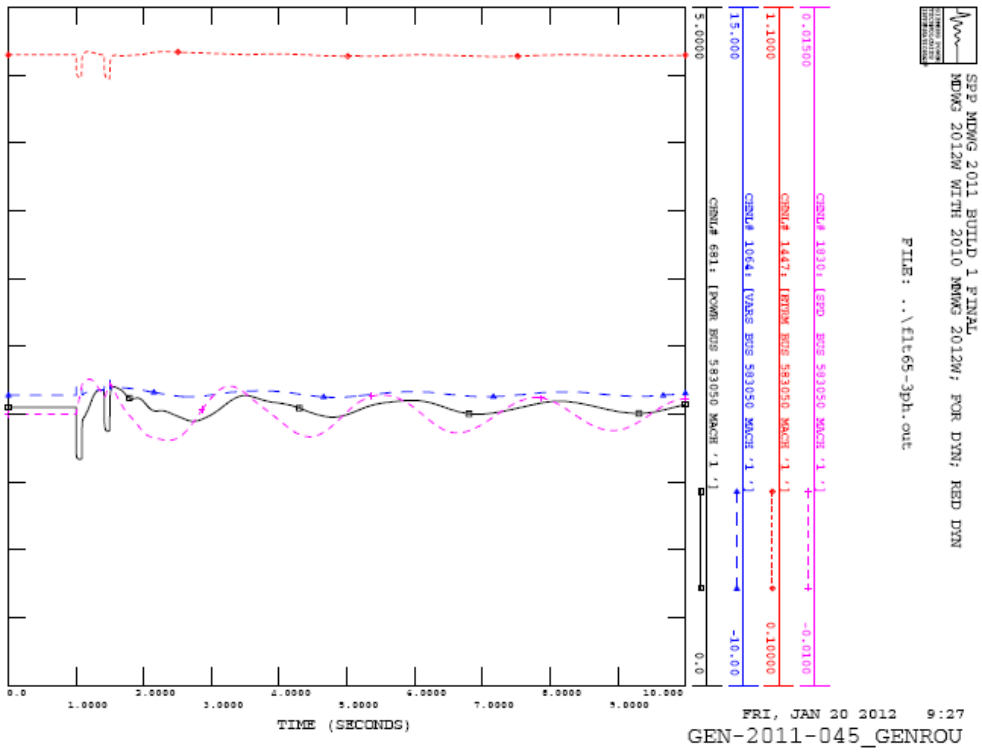

Figure 4-2. GEN-2011-045 Plot for Fault 65 – 3-Phase Fault on the Border (523775) to Tuco_Int (525832) 345kV line, near Border (with Tuco – Potter 345 kV Line, WP)

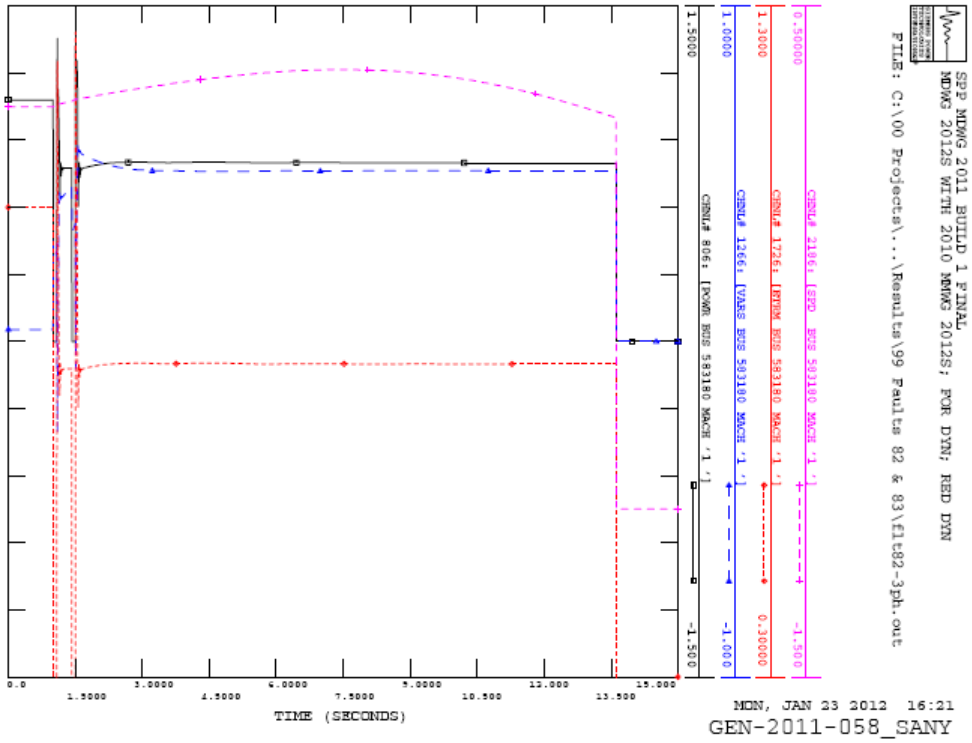

Figure 4-3. GEN-2011-058 Plot for Fault 82 – 3-Phase Fault on the GEN-2011-058 (562089) to Grassland (526677) 230kV line, near GEN-2011-058 (SP)

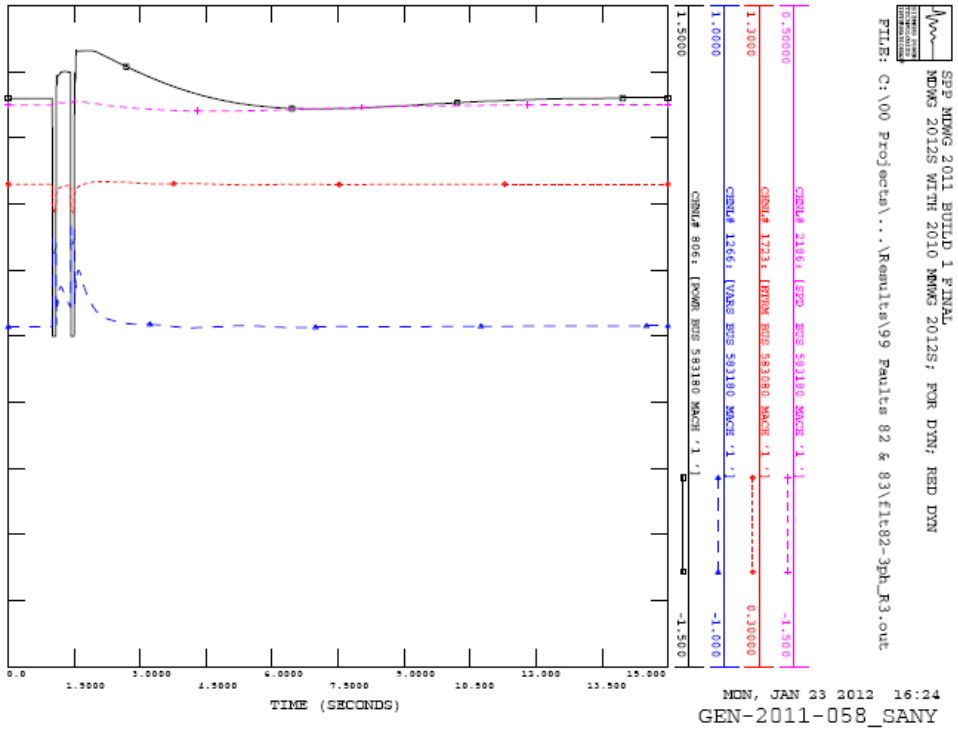

Figure 4-4. GEN-2011-058 Plot for Fault 82 – 3-Phase Fault on the GEN-2011-058 (562089) to Grassland (526677) 230kV Line, near GEN-2011-058 (with the Second GEN-2011-058 to Grassland 230 kV Line, SP)

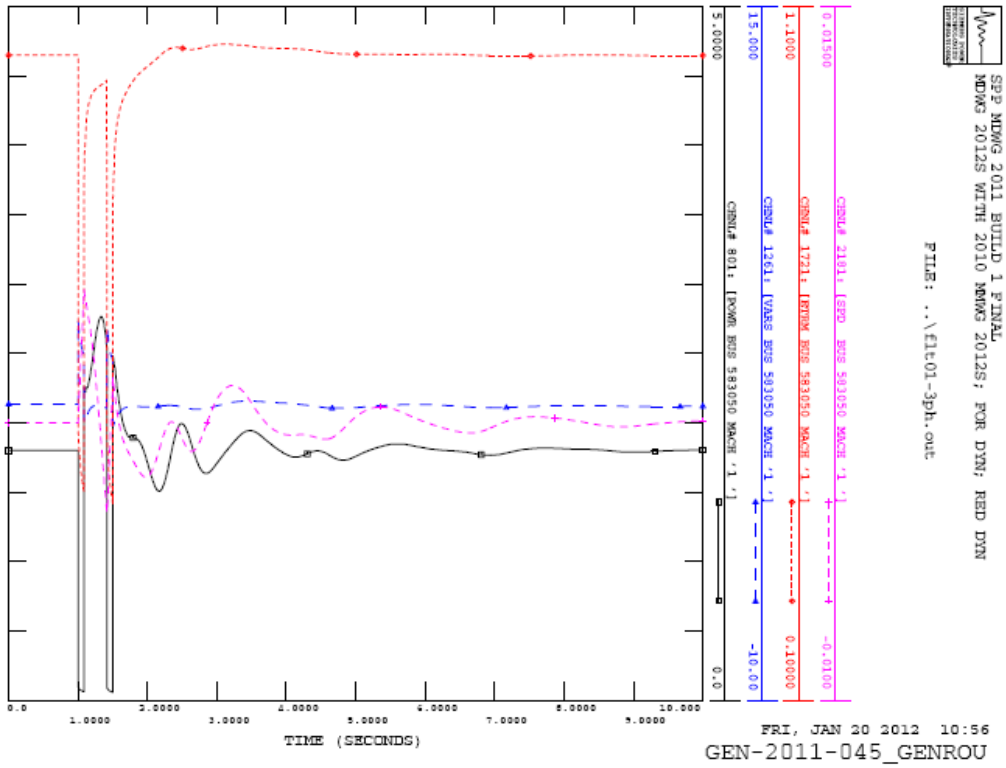

Figure 4-5. GEN-2011-045 Plot for Fault 1 – 3-Phase Fault on the Jones_Bus2 (526338) to LP-Holly (522870) 230kV Line, near Jones_Bus2 (SP)

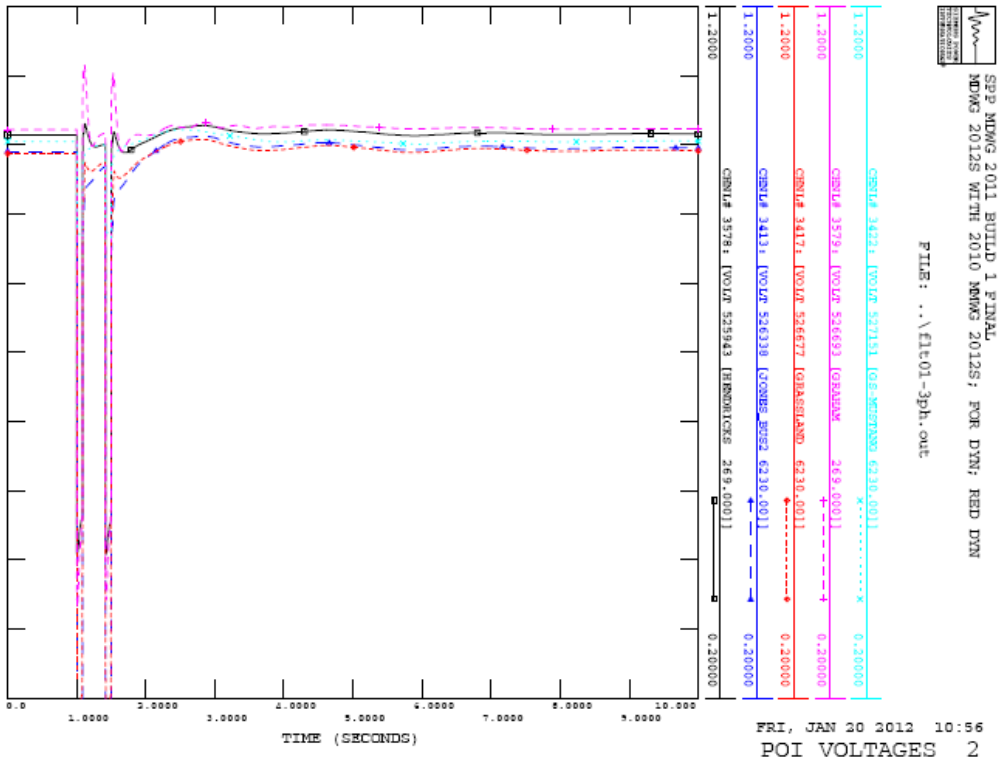

Figure 4-6. POI Voltages for Fault 1 – 3-Phase Fault on the Jones_Bus2 (526338) to LP-Holly (522870) 230kV Line, near Jones_Bus2 (SP)

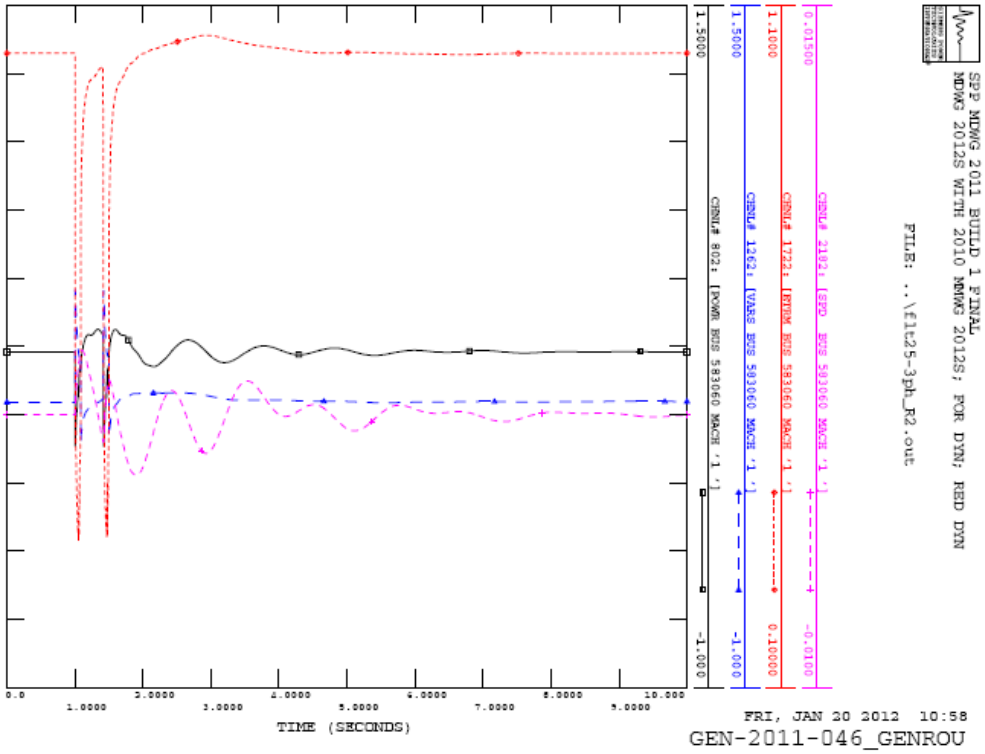

Figure 4-7. GEN-2011-046 Plot for Fault 25 – 3-Phase Fault on the Plsnt_Hill (524768) to E_Clovis (524773) 115kV Line, near Plsnt_Hill (SP)

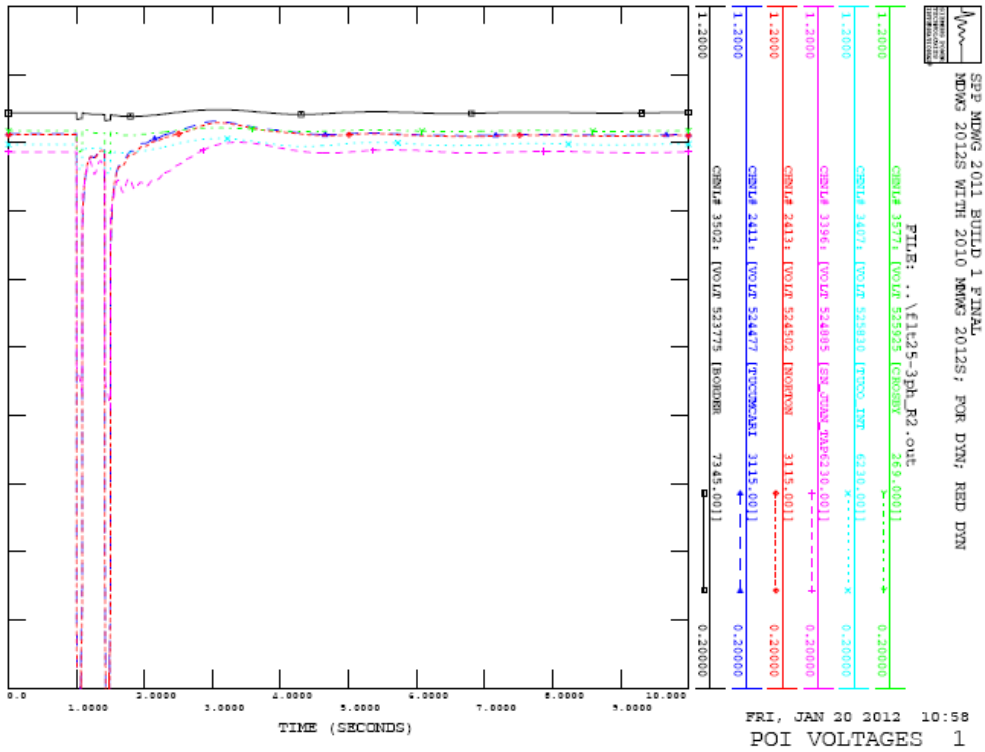

Figure 4-8. POI Voltages for Fault 25 – 3-Phase Fault on the Plsnt_Hill (524768) to E_Clovis (524773) 115kV Line, near Plsnt_Hill (SP)

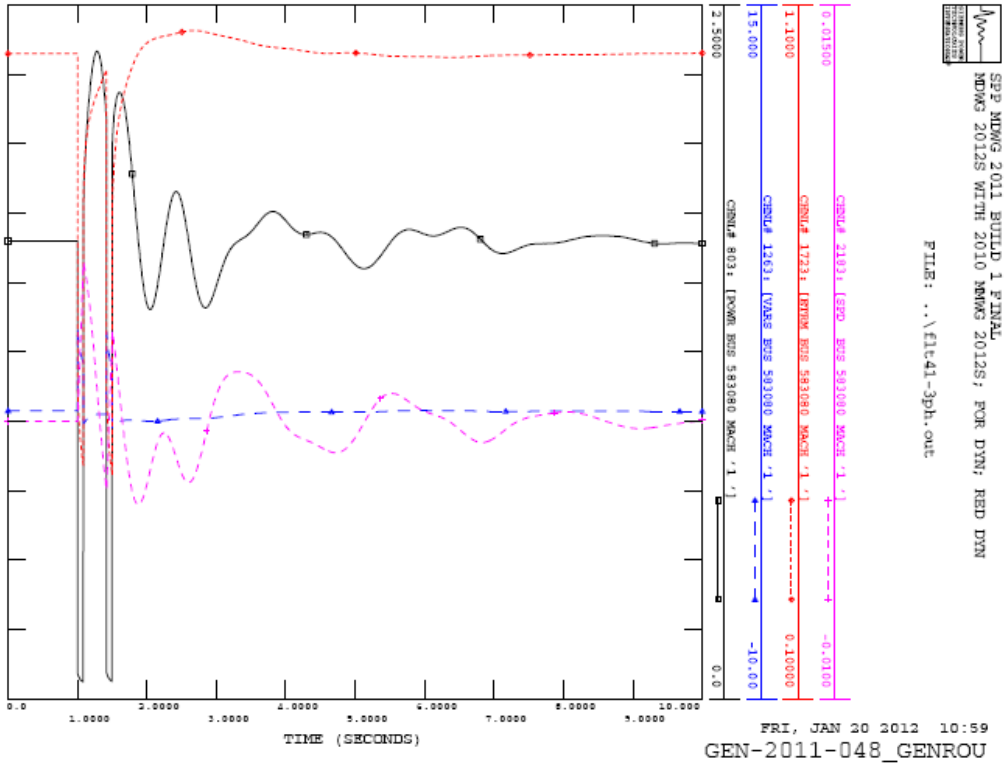

Figure 4-9. GEN-2011-048 Plot for Fault 41 – 3-Phase Fault on the Mustang (527149) to Amocowasson (526784) 230kV Line, near Mustang (SP)

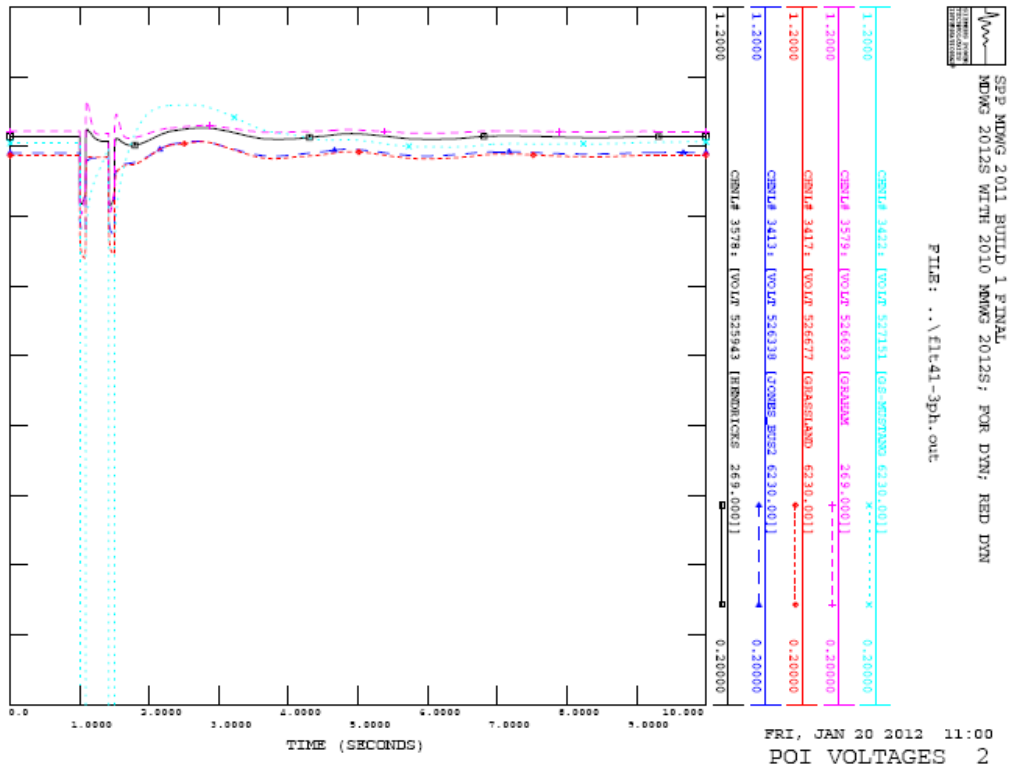

Figure 4-10. POI Voltages for Fault 41 – 3-Phase Fault on the Mustang (527149) to Amocowasson (526784) 230kV Line, near Mustang (SP)

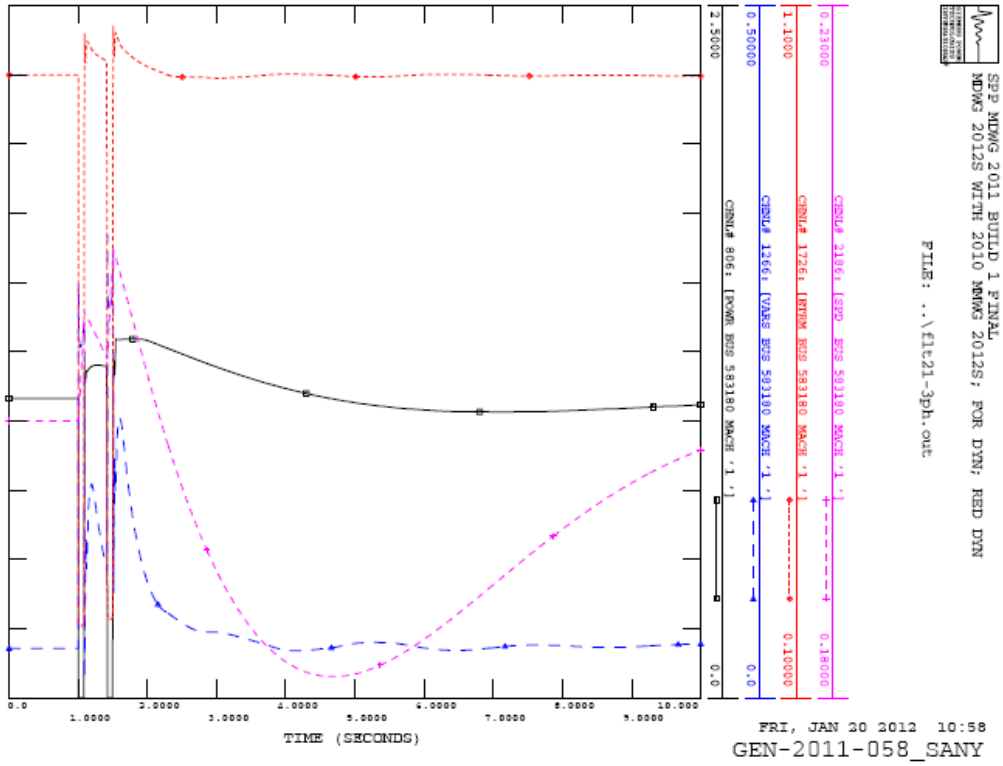

Figure 4-11. GEN-2011-058 Plot for Fault 21 – 3-Phase Fault on the G11-058-TAP (562089) to Borden (526830) 230kV Line, near G11-058-TAP (SP)

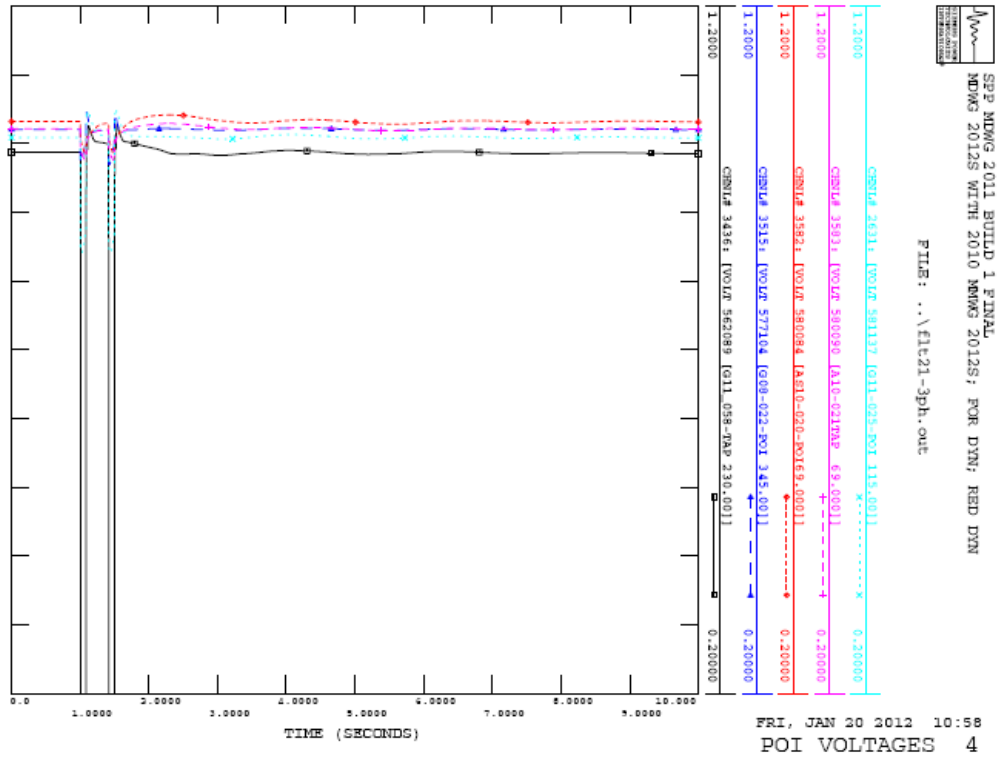

Figure 4-12. POI Voltages for Fault 21 – 3-Phase Fault on the G11-058-TAP (562089) to Borden (526830) 230kV Line, near G11-058-TAP (SP)

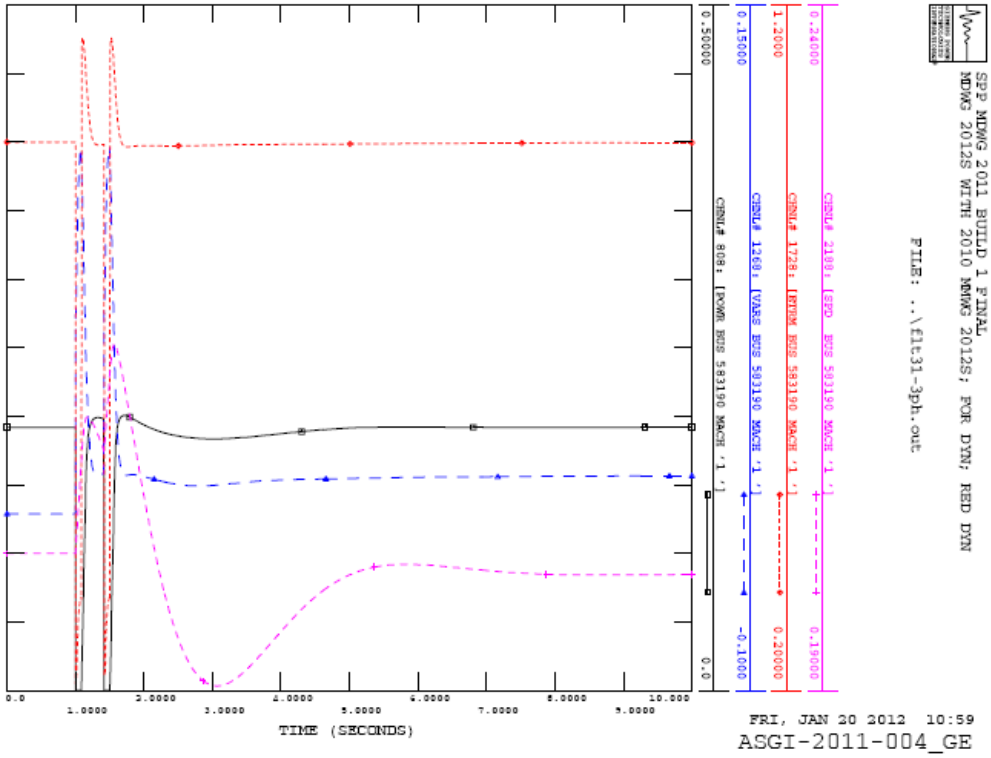

Figure 4-13. ASGI-2011-004 Plot for Fault 31 – 3-Phase Fault on the Crosby (525926) to Lubbock_EST (526298) 115kV Line, near Crosby (SP)

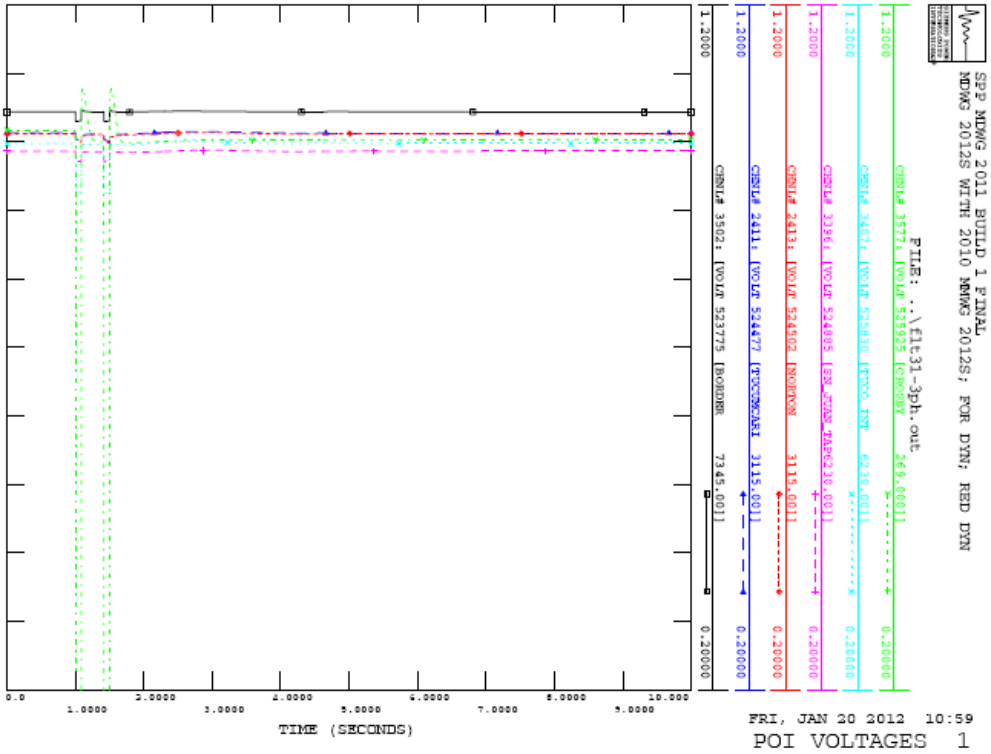

Figure 4-14. POI Voltages for Fault 31 – 3-Phase Fault on the Crosby (525926) to Lubbock_EST (526298) 115kV Line, near Crosby (SP)

4.2 Power Factor Requirements

All stability faults were tested as power flow contingencies to determine the power factor requirements for the wind farm study projects to maintain scheduled voltage at their respective points of interconnection (POI). The voltage schedules are set equal to the voltages at the POIs before the projects are added, with a minimum of 1.0 per unit. Fictitious reactive power sources were added to the study projects to maintain scheduled voltage during all studied contingencies. The MW and Mvar injections from the study projects at the POIs were recorded and the resulting power factors were calculated for all contingencies for summer peak and winter peak cases. The most leading and most lagging power factors determine the minimum power factor range capability that the study projects must install before commercial operation.

If more than one study project shared a single POI, the projects were grouped together and a common power factor requirement was determined for those study projects. This ensures that none of the study projects is required to provide more or less than its fair share of the reactive power requirements at a single POI. *Prior-queued* projects at the same POI, if any, were not grouped with the study projects because their interconnection requirements were determined in previous studies. The voltage schedules of prior-queued and study projects at the same POI were coordinated.

Per FERC and SPP Tariff requirements, if the power factor needed to maintain scheduled voltage is less than 0.95 lagging, then the requirement is limited to 0.95 lagging. The lower limit for leading power factor requirement is also 0.95. If a project never operated leading under any contingency, then the leading requirement is set to 1.0. The same applies on the lagging side.

The final power factor requirements are shown in Table 4-2 below. These are only the minimum power factor ranges based on steady-state analysis.

The full details for each contingency in summer and winter peak cases are given in Appendix C.

Table 4-2. Power Factor Requirements [a]

Request	Size (MW)	Generator Model	Point of Interconnection	Final PF Requirement	
				Lagging [b]	Leading [c]
GEN-2011-058	200	SANY SE93 2.0MW	Tap on Grassland to Borden 230kV line (G11_058-TAP, 562089)	0.989	0.999
ASGI-2011-004	19.2	GE 1.6MW	CROSBY 69kV (525925)	0.989	0.950 [d]

Notes:

a. For each plant, the table shows the minimum required power factor capability at the point of interconnection that must be designed and installed with the plant. The power factor capability at the POI includes the net effect of the generators, transformers, line impedances, and any reactive compensation devices installed on the plant side of the meter. Installing more capability than the minimum requirement is acceptable.

b. Lagging is when the generating plant is supplying reactive power to the transmission grid. In this situation, the alternating current sinusoid "lags" behind the alternating voltage sinusoid, meaning that the current peaks shortly after the voltage.

c. Leading is when the generating plant is taking reactive power from the transmission grid. In this situation, the alternating current sinusoid "leads" the alternating voltage sinusoid, meaning that the current peaks shortly before the voltage.

d. Electrical need is lower, but PF requirement limited to 0.95 by FERC order.

5. Conclusions

The DISIS-2011-002 Group 6 Definitive Impact Restudy evaluated the impacts of interconnecting the projects shown below.

Table 5-1. Interconnection Requests Evaluated in this Study

Request	Size (MW)	Generator Model	Point of Interconnection	Gen Buses
GEN-2011-045	205 Winter 180 Summer	GENROU	Jones_bus2 230kV (526338)	583050
GEN-2011-046	27 Winter 23 Summer	GENROU	Tucumcari 115kV (524477)	583060
GEN-2011-048	175 Winter 165 Summer	GENROU	Mustang 230kV (527151)	583080
GEN-2011-058	200	SANY SE93 2.0MW	Tap on Grassland to Borden 230kV line (G11_058-TAP, 562089)	583180 583183
ASGI-2011-004	19.2	GE 1.6MW	CROSBY 69kV (525925)	583190

Initial study results show the system experiencing undamped oscillations in winter peak conditions following fault 65 which is a 3-phase fault on the Border to Tuco 345 kV line.

In order to increase system damping following contingencies, the following system upgrade is required:

- A new 345 kV line from Tuco to Potter

GEN-2011-058 is tripped due to low generator terminal voltage following faults 82 and 83 which are 3-phase and 1-phase faults on the GEN-2011-058 Tap to Grassland 230 kV line.

The following upgrade is required to solve the problem:

- A second 230 kV line from GEN-2011-058 Tap to Grassland

With these upgrades, no stability problems were found for any of the simulated faults. All study projects and prior-queued projects remained stable and on-line following all faults.

Final power factor and capacitor requirements for the Group 6 projects are listed in Table 4-2.

With the assumptions and upgrades described in this report, DISIS-2011-002 Group 6 should be able to connect without causing any stability problems on the SPP transmission grid.

Any change in system or wind farm models or assumptions could change these results.

Appendix A – Summer Peak Plots

See attachments.

Appendix B – Winter Peak Plots

See attachments.

Appendix C – Power Factor Details

See attachment.

Appendix D – Project Model Data

See attachment.

Appendix E – SPP Transmission One-line Diagrams

See attachment.

O: Stability Study for Group 7

See next page.

Southwest Power Pool

Definitive Interconnection System Impact Study

DISIS-2011-002-Group 7

SPP Generation Interconnection Studies

(DISIS-2011-002)

January 2012

Executive Summary

A transient stability study has been performed by Southwest Power Pool (SPP) to evaluate the interconnection requests in the Definitive Impact Study Interconnection Study (DISIS-2011-002) for Group 7 in the Southwestern Oklahoma area.

The DISIS-2011-002 study has two (2) Interconnection Requests in the Southwest Oklahoma area. The interconnection requests include GEN-2011-037 and GEN-2011-049. The interconnection requests in DISIS-2011-002 Group 7 are dispatching 356.3MW.

The results of a stability analysis determined that for the addition of the DISIS-2011-002 interconnection requests, the transmission system was found to remain stable for both summer and winter peak conditions. Additionally, the projects that were wind farms were found to stay connected during the contingencies that were studied, meeting the Low Voltage Ride Through (LVRT) requirements of FERC Order #661A.

The power factor analysis indicated that all DISIS-2011-002 interconnection requests will be required to maintain 95% lagging (producing vars) and 95% leading (absorbing vars) power factor at the point of interconnection.

Should any previously queued projects that were included in this study withdraw from the queue, then this System Impact Study may have to be revised to determine the impacts of this Interconnection Customer's project on transmission facilities.

1.0 Introduction

A transient stability study has been performed by Southwest Power Pool (SPP) to evaluate the interconnection requests in the Definitive Impact Study Interconnection Study (DISIS-2011-002) for Group 7 in the Southwestern Oklahoma area.

The DISIS-2011-002 study has two (2) Interconnection Requests in the Southwestern Oklahoma area. The interconnection requests include GEN-2011-037 and GEN-2011-049. The interconnection requests in DISIS-2011-002 Group 7 are dispatching 356.3MW.

Two seasonal base cases were used in the study to analyze the stability impacts of the proposed generation facilities. A 2012 summer peak case and a 2012 winter peak case were modified to include the prior queued projects shown in Table 2.

In this study SPP monitored the generators and transmission lines in Areas 520, 524, 525, 526, 531, 534 and 536.

2.0 Purpose

The purpose of this Definitive Impact Study Interconnection Study (DISIS) is to evaluate the impact of the proposed interconnection on the reliability of the Transmission System. Table 1 below lists the requests that were analyzed in this study.

Request	Size (MW)	Wind Turbine Model	Point of Interconnection
GEN-2011-037	7(105.6)	GE 1.6MW	Blucan5 138kV (521129)
GEN-2011-049	250.7	Siemens 2.3MW	Border 345kV (523775)

Table 1: DISIS-2011-002 Interconnection Request Table

Should any of the previously queued projects listed in Table 2 withdraw, then this System Impact Study may require a re-study of this request at the expense of the customer.

Request	Size (MW)	Wind Turbine Model	Point of Interconnection
Blue Canyon I	74	CIMTR	Washita 138kV (521089)
Blue Canyon II (GEN-2003-004)	151	Vestas V80	Washita 138kV (521089)
Weatherford	147	G.E. 1.5MW	Weatherford 138kV (511506)
GEN-2003-005	100	G.E. 1.6MW	Tap on the Anadarko – Paradise 138kV line (521129)
GEN-2006-002	101	G.E. 1.5 & 1.6MW	Sweetwater 230kV (511541)
GEN-2006-035	224	Gamesa	Sweetwater 230kV (511541)
GEN-2006-043	98.9	Siemens 2.3MW	Sweetwater 230kV (511541)
GEN-2007-032	150	Acciona 1.5MW	Tap on the Clinton Jct. – Clinton 138kV line (560939)
GEN-2007-052	150	Gas Turbine	Anadarko 138kV (520814)
GEN-2008-023	150	G.E. 1.6MW	Hobart Junction 138kV (511463)
GEN-2009-016	100.8	G.E. 1.6MW	Falcon Road 138KV (511511)
GEN-2008-037	100.8	Vestas V90 1.8MW	Tap on the Washita – Blue Canyon 138kV line (Bus 573570)
GEN-2010-012	65	Clipper 2.5MW	Brantley 138kV (520832)

Table 2: DISIS-2011-002 Prior Queued Request Table

3.0 Facilities

3.1 Interconnection Facility

GEN-2011-037

GEN-2011-037 is an increase in generation of the existing GEN-2003-005 generating facility already in service. The generating facility was studied using the GE SLE 1.5MW wind turbines. The increase in power is achieved through a software change in the GE wind turbines. The software change will increase the generating facility power by an additional seven (7) MW, for a total of 105.6MW. The point of interconnection (POI) is the WFEC Blue Canyon 138 kV substation. Figure 1 below shows a POI one-line of the customer's facility. Figure 2 shows a detailed one-line diagram of the GEN-2011-037 facility.

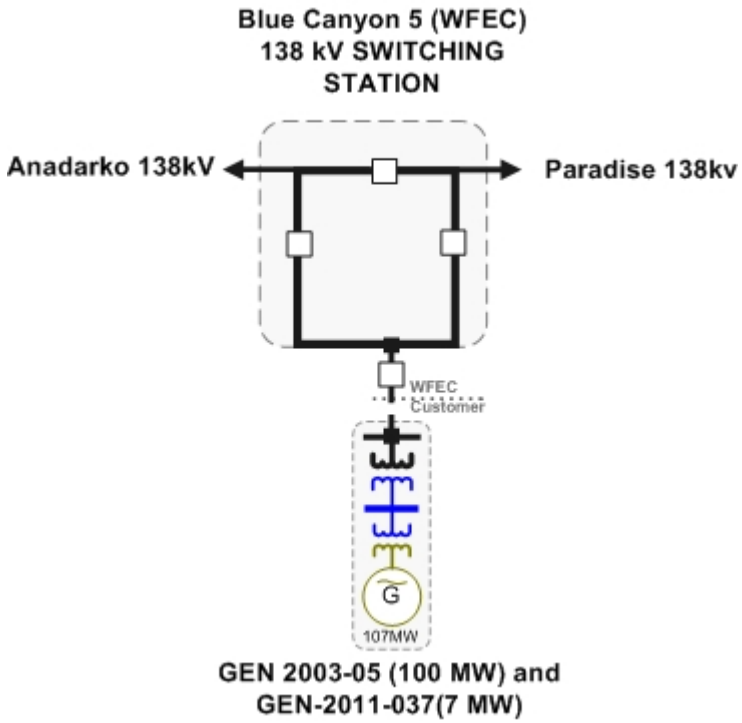

Figure 1: GEN-2011-037 POI One-line Diagram

Figure 2: GEN-2011-037 Facility One-line Diagram

GEN-2011-049

The generating facility was studied with the assumption that it would be using the Siemens 2.3MW wind turbines. The nameplate rating of each turbine is 2.3MW (2300kW) with a machine base of 2556kVA. Each wind turbine has a 34.5kV/0.69kV 2600kVA transformer. The Customer's interconnection facilities will include two (2) 34.5/345/13.8kV 81/108/135MVA transformers. The point of interconnection (POI) will be at SPS Border 345 kV substation. Figure

3 below shows a POI one-line of the customer's facility. Figure 4 shows a detailed one-line diagram of the GEN-2011-049 facility.

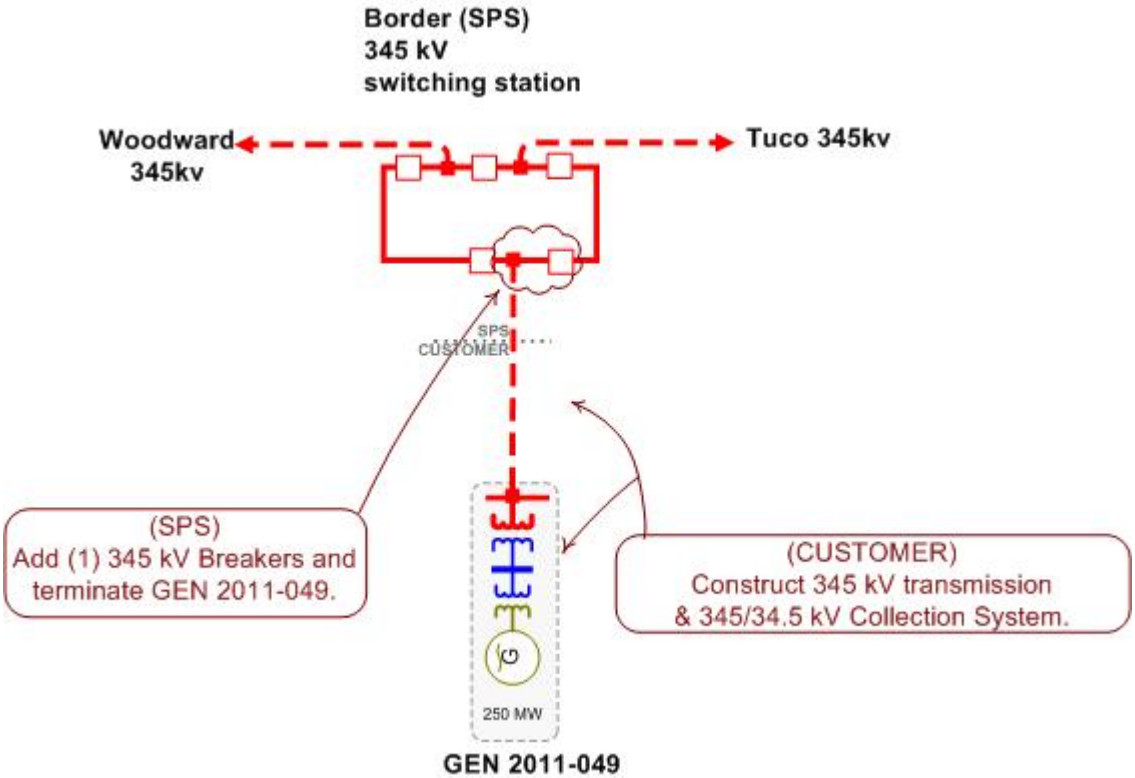

Figure 3: GEN-2011-049 POI One-line Diagram

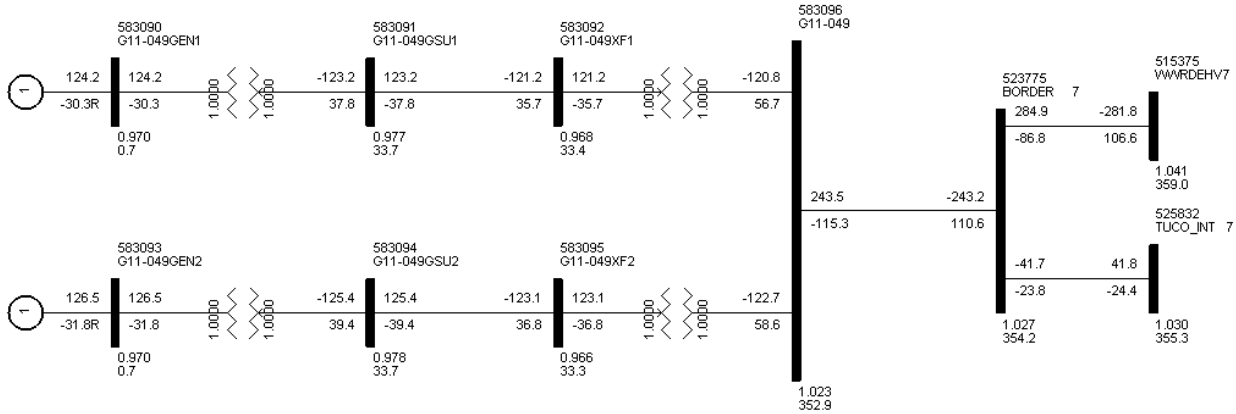

Figure 4: GEN-2011-049 Facility One-line Diagram

4.0 Stability Study Criteria

FERC Order 661A Low Voltage Ride-Through Provisions (LVRT), which went into effect January 1, 2006, requires that wind generating plants remain in-service during 3-phase faults at the point of interconnection. This order may require a Static VAr Compensator (SVC) or STATCOM device be specified at the Customer facility to keep the wind generator on-line for the fault. Dynamic Stability studies performed as part of the System Impact Study will provide additional guidance as to whether the reactive compensation can be static or a portion must be dynamic (such as a SVC or STATCOM).

5.0 Stability Study Analysis

Sixty-six (66) contingencies were considered for the transient stability simulations. These contingencies included three phase faults and single phase line faults at locations defined by SPP. Single-phase line faults were simulated by applying a fault impedance to the positive sequence network at the fault location to represent the effect of the negative and zero sequence networks on the positive sequence network. The fault impedance was computed to give a positive sequence voltage at the specified fault location of approximately 60% of pre-fault voltage. This method is in agreement with SPP current practice. The faults that were defined and simulated are listed in Table 3 below. The faults were simulated on both the summer peak and the winter peak models.

Cont. No.	Cont. Name	Description
1	FLT01-3PH	3 phase fault on the Blucan (521129) to Anadarko (520814) 138kV line, near Blucan. a. Apply fault at the Blucan 138kV bus. b. Clear fault after 5 cycles by tripping the faulted line. c. Wait 20 cycles, and then re-close the line in (b) back into the fault. d. Leave fault on for 5 cycles, then trip the line in (b) and remove fault.
2	FLT02-1PH	*Single phase fault and sequence like previous*
3	FLT03-3PH	3 phase fault on the Blucan (521129) to Paradise (521024) 138kV line, near Blucan. a. Apply fault at the Blucan 138kV bus. b. Clear fault after 5 cycles by tripping the faulted line. c. Wait 20 cycles, and then re-close the line in (b) back into the fault. d. Leave fault on for 5 cycles, then trip the line in (b) and remove fault.
4	FLT04-1PH	*Single phase fault and sequence like previous*
5	FLT05-3PH	3 phase fault on the Paradise (521024) to Snyder (521025) 138kV line, near Paradise. a. Apply fault at the Paradise 138kV bus. b. Clear fault after 5 cycles by tripping the faulted line. c. Wait 20 cycles, and then re-close the line in (b) back into the fault. d. Leave fault on for 5 cycles, then trip the line in (b) and remove fault.
6	FLT06-1PH	*Single phase fault and sequence like previous*
7	FLT07-3PH	3 phase fault on the Snyder (521051) to Navajo (521009) 69kV line, near Snyder. a. Apply fault at the Snyder 69kV bus. b. Clear fault after 5 cycles by tripping the faulted line. c. Wait 20 cycles, and then re-close the line in (b) back into the fault. d. Leave fault on for 5 cycles, then trip the line in (b) and remove fault.
8	FLT08-1PH	*Single phase fault and sequence like previous*
9	FLT09-3PH	3 phase fault on the Snyder (521051) to Tipton (521070) 69kV line, near Snyder. a. Apply fault at the Snyder 69kV bus. b. Clear fault after 5 cycles by tripping the faulted line. c. Wait 20 cycles, and then re-close the line in (b) back into the fault. d. Leave fault on for 5 cycles, then trip the line in (b) and remove fault.
10	FLT10-1PH	*Single phase fault and sequence like previous*
11	FLT11-3PH	3 phase fault on the Snyder-4 (511435) to Altusjt (51140) 138kV line, near Snyder-4. a. Apply fault at the Snyder-4 138kV bus. b. Clear fault after 5 cycles by tripping the faulted line. c. Wait 20 cycles, and then re-close the line in (b) back into the fault. d. Leave fault on for 5 cycles, then trip the line in (b) and remove fault.
12	FLT12-1PH	*Single phase fault and sequence like previous*
13	FLT13-3PH	3 phase fault on the Snyder-4 (511435) to Cache (511500) 138kV line, near Snyder-4. a. Apply fault at the Snyder-4 138kV bus. b. Clear fault after 5 cycles by tripping the faulted line. c. Wait 20 cycles, and then re-close the line in (b) back into the fault. d. Leave fault on for 5 cycles, then trip the line in (b) and remove fault.
14	FLT14-1PH	*Single phase fault and sequence like previous*

Cont. No.	Cont. Name	Description
15	FLT15-3PH	3 phase fault on the Snyder-2 (511475) to Rosvtap (511444) 69kV line, near Snyder-2. a. Apply fault at the Snyder 69kV bus. b. Clear fault after 5 cycles by tripping the faulted line. c. Wait 20 cycles, and then re-close the line in (b) back into the fault. d. Leave fault on for 5 cycles, then trip the line in (b) and remove fault.
16	FLT16-1PH	*Single phase fault and sequence like previous*
17	FLT17-3PH	3 phase fault on the Snyder-2 (511475) to Fredjc (511460) 69kV line, near Snyder-2. a. Apply fault at the Snyder 69kV bus. b. Clear fault after 5 cycles by tripping the faulted line. c. Wait 20 cycles, and then re-close the line in (b) back into the fault. d. Leave fault on for 5 cycles, then trip the line in (b) and remove fault.
18	FLT18-1PH	*Single phase fault and sequence like previous*
19	FLT19-3PH	3 phase fault on the Snyder-2 (511475) to Headric (511462) 69kV line, near Snyder-2. a. Apply fault at the Snyder 69kV bus. b. Clear fault after 5 cycles by tripping the faulted line. c. Wait 20 cycles, and then re-close the line in (b) back into the fault. d. Leave fault on for 5 cycles, then trip the line in (b) and remove fault.
20	FLT20-1PH	*Single phase fault and sequence like previous*
21	FLT21-3PH	3 phase fault on the Anadarko (520814) to S.W.S. (511477) 138kV line, near Anadarko. a. Apply fault at the Anadarko 138kV bus. b. Clear fault after 5 cycles by tripping the faulted line. c. Wait 20 cycles, and then re-close the line in (b) back into the fault. d. Leave fault on for 5 cycles, then trip the line in (b) and remove fault.
22	FLT22-1PH	*Single phase fault and sequence like previous*
23	FLT23-3PH	3 phase fault on the Anadarko (520814) to Gracmnt (515802) 138kV line, near Anadarko. a. Apply fault at the Anadarko 138kV bus. b. Clear fault after 5 cycles by tripping the faulted line. c. Wait 20 cycles, and then re-close the line in (b) back into the fault. d. Leave fault on for 5 cycles, then trip the line in (b) and remove fault.
24	FLT24-1PH	*Single phase fault and sequence like previous*
25	FLT25-3PH	3 phase fault on the Anadarko (520814) to Corn (520867) 138kV line, near Anadarko. a. Apply fault at the Anadarko 138kV bus. b. Clear fault after 5 cycles by tripping the faulted line. c. Wait 20 cycles, and then re-close the line in (b) back into the fault. d. Leave fault on for 5 cycles, then trip the line in (b) and remove fault.
26	FLT26-1PH	*Single phase fault and sequence like previous*
27	FLT27-3PH	3 phase fault on the Anadarko (520814) to Georgia (520923) 138kV line, near Anadarko. a. Apply fault at the Anadarko 138kV bus. b. Clear fault after 5 cycles by tripping the faulted line. c. Wait 20 cycles, and then re-close the line in (b) back into the fault. d. Leave fault on for 5 cycles, then trip the line in (b) and remove fault.
28	FLT28-1PH	*Single phase fault and sequence like previous*

Cont. No.	Cont. Name	Description
29	FLT29-3PH	3 phase fault on the Anadarko (520814) to Pocaset (521031) 138kV line, near Anadarko. a. Apply fault at the Anadarko 138kV bus. b. Clear fault after 5 cycles by tripping the faulted line. c. Wait 20 cycles, and then re-close the line in (b) back into the fault. d. Leave fault on for 5 cycles, then trip the line in (b) and remove fault.
30	FLT30-1PH	*Single phase fault and sequence like previous*
31	FLT31-3PH	3 phase fault on the L.E.S. (511467) to O.K.U. (511465) 345kV line, near L.E.S. a. Apply fault at the L.E.S. 345kV bus. b. Clear fault after 5 cycles by tripping the faulted line. c. Wait 20 cycles, and then re-close the line in (b) back into the fault. d. Leave fault on for 5 cycles, then trip the line in (b) and remove fault.
32	FLT32-1PH	*Single phase fault and sequence like previous*
33	FLT33-3PH	3 phase fault on the L.E.S. (511467) to Sunnysd (515136) 345kV line, near L.E.S. a. Apply fault at the L.E.S. 345kV bus. b. Clear fault after 5 cycles by tripping the faulted line. c. Wait 20 cycles, and then re-close the line in (b) back into the fault. d. Leave fault on for 5 cycles, then trip the line in (b) and remove fault.
34	FLT34-1PH	*Single phase fault and sequence like previous*
35	FLT35-3PH	3 phase fault on the L.E.S. (511467) to Gracemont (515800) 345kV line, near L.E.S. a. Apply fault at the L.E.S. 345kV bus. b. Clear fault after 5 cycles by tripping the faulted line. c. Wait 20 cycles, and then re-close the line in (b) back into the fault. d. Leave fault on for 5 cycles, then trip the line in (b) and remove fault.
36	FLT36-1PH	*Single phase fault and sequence like previous*
37	FLT37-3PH	3 phase fault on the Snyder 138kV (521052) to Snyder 69kV (521051) near the Snyder 138kV bus. a. Apply fault at the Snyder 138kV bus. b. Clear fault after 5 cycles by tripping the faulted transformer.
38	FLT39-3PH	3 phase fault on the Snyder 138kV (511435) to Snyder 69kV (511475) near the 138kV bus. a. Apply fault at the Snyder 138kV bus. b. Clear fault after 5 cycles by tripping the faulted transformer.
39	FLT41-3PH	3 phase fault on the Anadarko 138kV (520814) to Anadarko 69kV (520810) near the 138kV bus. a. Apply fault at the Anadarko 138kV bus. b. Clear fault after 5 cycles by tripping the faulted transformer.
40	FLT43-3PH	3 phase fault on the L.E.S. 138kV (511467) to L.E.S. 345kV (511468)/13.8kV (511411) transformer, near the 138kV bus. a. Apply fault at the L.E.S. 138kV bus. b. Clear fault after 5 cycles by tripping the faulted transformer.
41	FLT45-3PH	3 phase fault on the Border (523775) to Woodword (515375) 345kV line, near Border. a. Apply fault at the Border 345kV bus. b. Clear fault after 5 cycles by tripping the faulted line. c. Wait 20 cycles, and then re-close the line in (b) back into the fault. d. Leave fault on for 5 cycles, then trip the line in (b) and remove fault.
42	FLT46-1PH	*Single phase fault and sequence like previous*

Cont. No.	Cont. Name	Description
43	FLT49-3PH	3 phase fault on the Border (523775) to Tuco_Int (525832) 345kV line, near Border. a. Apply fault at the Border 345kV bus. b. Clear fault after 5 cycles by tripping the faulted line. c. Wait 20 cycles, and then re-close the line in (b) back into the fault. d. Leave fault on for 5 cycles, then trip the line in (b) and remove fault.
44	FLT50-1PH	*Single phase fault and sequence like previous*
45	FLT51-3PH	3 phase fault on the Woodword (515375) to Thistle (539801) 345kV line, ckt1, near Woodword. a. Apply fault at the Woodword 345kV bus. b. Clear fault after 5 cycles by tripping the faulted line. c. Wait 20 cycles, and then re-close the line in (b) back into the fault. d. Leave fault on for 5 cycles, then trip the line in (b) and remove fault.
46	FLT52-1PH	*Single phase fault and sequence like previous*
47	FLT53-3PH	3 phase fault on the Woodword (515375) to Mooreland (560304) 345kV line, ckt1, near Woodword. a. Apply fault at the Woodword 345kV bus. b. Clear fault after 5 cycles by tripping the faulted line. c. Wait 20 cycles, and then re-close the line in (b) back into the fault. d. Leave fault on for 5 cycles, then trip the line in (b) and remove fault.
48	FLT54-1PH	*Single phase fault and sequence like previous*
49	FLT55-3PH	3 phase fault on the Woodword (515375) to Beaver County (580500) 345kV line, ckt1, near Woodword. a. Apply fault at the Woodword 345kV bus. b. Clear fault after 5 cycles by tripping the faulted line. c. Wait 20 cycles, and then re-close the line in (b) back into the fault. d. Leave fault on for 5 cycles, then trip the line in (b) and remove fault.
50	FLT56-1PH	*Single phase fault and sequence like previous*
51	FLT57-3PH	3 phase fault on the Woodword (515375) to G11-051-Tap (562075) 345kV line, near Woodword. a. Apply fault at the Woodword 345kV bus. b. Clear fault after 5 cycles by tripping the faulted line. c. Wait 20 cycles, and then re-close the line in (b) back into the fault. d. Leave fault on for 5 cycles, then trip the line in (b) and remove fault.
52	FLT58-1PH	*Single phase fault and sequence like previous*
53	FLT59-3PH	3 phase fault on the Hitchland (523097) to Stevens (560029) 345kV line, near Hitchland. a. Apply fault at the Hitchland 345kV bus. b. Clear fault after 5 cycles by tripping the faulted line. c. Wait 20 cycles, and then re-close the line in (b) back into the fault. d. Leave fault on for 5 cycles, then trip the line in (b) and remove fault.
54	FLT60-1PH	*Single phase fault and sequence like previous*
55	FLT61-3PH	3 phase fault on the Hitchland (523097) to G05-017-POI (579118) 345kV line, near Hitchland. a. Apply fault at the Hitchland 345kV bus. b. Clear fault after 5 cycles by tripping the faulted line. c. Wait 20 cycles, and then re-close the line in (b) back into the fault. d. Leave fault on for 5 cycles, then trip the line in (b) and remove fault.
56	FLT62-1PH	*Single phase fault and sequence like previous*

Cont. No.	Cont. Name	Description
57	FLT63-3PH	3 phase fault on the Hitchland (523097) to Beaver County (580500) 345kV line, near Hitchland. a. Apply fault at the Hitchland 345kV bus. b. Clear fault after 5 cycles by tripping the faulted line. c. Wait 20 cycles, and then re-close the line in (b) back into the fault. d. Leave fault on for 5 cycles, then trip the line in (b) and remove fault.
58	FLT64-1PH	*Single phase fault and sequence like previous*
59	FLT65-3PH	3 phase fault on the Tuco_Int (525832) to G08-014-POI (560813) 345kV line, near Hitchland. a. Apply fault at the Tuco_Int 345kV bus. b. Clear fault after 5 cycles by tripping the faulted line. c. Wait 20 cycles, and then re-close the line in (b) back into the fault. d. Leave fault on for 5 cycles, then trip the line in (b) and remove fault.
60	FLT66-1PH	*Single phase fault and sequence like previous*
61	FLT67-3PH	3 phase fault on the Hitchland 345KV (523097) to Hitchland 230 (523095) transformer, near the 345KV bus. a. Apply fault at the Hitchland 345KV bus. b. Clear fault after 5 cycles by tripping the faulted transformer.
62	FLT69-3PH	3 phase fault on the Tuco_Int 345kV (525832) to Tuco_Int 230kV (525830) transformer, near the 345kV bus. a. Apply fault at the Tuco_Int 345kV bus. b. Clear fault after 5 cycles by tripping the faulted transformer.
63	FLT71-3PH	3 phase fault on the Hitchland (523097) to G11-021-POI (580507) 345kV line, near Hitchland. a. Apply fault at the Hitchland 345kV bus. b. Clear fault after 5 cycles by tripping the faulted line. c. Wait 20 cycles, and then re-close the line in (b) back into the fault. d. Leave fault on for 5 cycles, then trip the line in (b) and remove fault.
64	FLT72-1PH	*Single phase fault and sequence like previous*
65	FLT51_2CKT-3PH	3 phase fault on the Woodword (515375) to Thistle (539801) 345kV line, ckt1&2, near Woodword. a. Apply fault at the Woodword 345kV bus. b. Clear fault after 5 cycles by tripping the faulted line. c. Wait 20 cycles, and then re-close the line in (b) back into the fault. d. Leave fault on for 5 cycles, then trip the line in (b) and remove fault.
66	FLT55_2CKT-3PH	3 phase fault on the Woodword (515375) to Beaver County (580500) 345kV line, ckt1, near Woodword. a. Apply fault at the Woodword 345kV bus. b. Clear fault after 5 cycles by tripping the faulted line. c. Wait 20 cycles, and then re-close the line in (b) back into the fault. d. Leave fault on for 5 cycles, then trip the line in (b) and remove fault.

Table 3: Contingency List for Group 7

6.0 Simulation Results

All faults were run for both summer and winter cases, no tripping occurred in this study.

Table 4 summarizes the results for all faults. Complete sets of plots for summer and winter cases are available on request.

Based on the dynamic results, with all network upgrades in service, all the requests in Group 7 did not cause any stability problems and remained stable for all faults studied, with the addition the proposed upgrades.

Cont. No.	Cont. Name	Description	Summer	Winter
1	FLT01-3PH	3 phase fault on the Blucan (521129) to Anadarko (520814) 138kV line, near Blucan.	STABLE	STABLE
2	FLT02-1PH	*Single phase fault and sequence like previous*	STABLE	STABLE
3	FLT03-3PH	3 phase fault on the Blucan (521129) to Paradise (521024) 138kV line, near Blucan.	STABLE	STABLE
4	FLT04-1PH	*Single phase fault and sequence like previous*	STABLE	STABLE
5	FLT05-3PH	3 phase fault on the Paradise (521024) to Snyder (521025) 138kV line, near Paradise.	STABLE	STABLE
6	FLT06-1PH	*Single phase fault and sequence like previous*	STABLE	STABLE
7	FLT07-3PH	3 phase fault on the Snyder (521051) to Navajo (521009) 69kV line, near Snyder.	STABLE	STABLE
8	FLT08-1PH	*Single phase fault and sequence like previous*	STABLE	STABLE
9	FLT09-3PH	3 phase fault on the Snyder (521051) to Tipton (521070) 69kV line, near Snyder.	STABLE	STABLE
10	FLT10-1PH	*Single phase fault and sequence like previous*	STABLE	STABLE
11	FLT11-3PH	3 phase fault on the Snyder-4 (511435) to Altusjt (51140) 138kV line, near Snyder-4.	STABLE	STABLE
12	FLT12-1PH	*Single phase fault and sequence like previous*	STABLE	STABLE
13	FLT13-3PH	3 phase fault on the Snyder-4 (511435) to Cache (511500) 138kV line, near Snyder-4.	STABLE	STABLE
14	FLT14-1PH	*Single phase fault and sequence like previous*	STABLE	STABLE
15	FLT15-3PH	3 phase fault on the Snyder-2 (511475) to Rosvtap (511444) 69kV line, near Snyder-2.	STABLE	STABLE
16	FLT16-1PH	*Single phase fault and sequence like previous*	STABLE	STABLE
17	FLT17-3PH	3 phase fault on the Snyder-2 (511475) to Fredjc (511460) 69kV line, near Snyder-2.	STABLE	STABLE
18	FLT18-1PH	*Single phase fault and sequence like previous*	STABLE	STABLE
19	FLT19-3PH	3 phase fault on the Snyder-2 (511475) to Headric (511462) 69kV line, near Snyder-2.	STABLE	STABLE
20	FLT20-1PH	*Single phase fault and sequence like previous*	STABLE	STABLE
21	FLT21-3PH	3 phase fault on the Anadarko (520814) to S.W.S. (511477) 138kV line, near Anadarko.	STABLE	STABLE
22	FLT22-1PH	*Single phase fault and sequence like previous*	STABLE	STABLE
23	FLT23-3PH	3 phase fault on the Anadarko (520814) to Gracmnt (515802) 138kV line, near Anadarko.	STABLE	STABLE
24	FLT24-1PH	*Single phase fault and sequence like previous*	STABLE	STABLE
25	FLT25-3PH	3 phase fault on the Anadarko (520814) to Corn (520867) 138kV line, near Anadarko.	STABLE	STABLE
26	FLT26-1PH	*Single phase fault and sequence like previous*	STABLE	STABLE
27	FLT27-3PH	3 phase fault on the Anadarko (520814) to Georgia (520923) 138kV line, near Anadarko.	STABLE	STABLE
28	FLT28-1PH	*Single phase fault and sequence like previous*	STABLE	STABLE
29	FLT29-3PH	3 phase fault on the Anadarko (520814) to Pocaset (521031) 138kV line, near Anadarko.	STABLE	STABLE
30	FLT30-1PH	*Single phase fault and sequence like previous*	STABLE	STABLE
31	FLT31-3PH	3 phase fault on the L.E.S. (511467) to O.K.U. (511465) 345kV line, near L.E.S.	STABLE	STABLE
32	FLT32-1PH	*Single phase fault and sequence like previous*	STABLE	STABLE
33	FLT33-3PH	3 phase fault on the L.E.S. (511467) to Sunnysd (515136) 345kV line, near L.E.S.	STABLE	STABLE
34	FLT34-1PH	*Single phase fault and sequence like previous*	STABLE	STABLE

Cont. No.	Cont. Name	Description	Summer	Winter
35	FLT35-3PH	3 phase fault on the L.E.S. (511467) to Gracemont (515800) 345kV line, near L.E.S.	STABLE	STABLE
36	FLT36-1PH	*Single phase fault and sequence like previous*	STABLE	STABLE
37	FLT37-3PH	3 phase fault on the Snyder 138kV (521052) to Snyder 69kV (521051) near the Snyder 138kV bus.	STABLE	STABLE
38	FLT39-3PH	3 phase fault on the Snyder 138kV (511435) to Snyder 69kV (511475) near the 138kV bus.	STABLE	STABLE
39	FLT41-3PH	3 phase fault on the Anadarko 138kV (520814) to Anadarko 69kV (520810) near the 138kV bus.	STABLE	STABLE
40	FLT43-3PH	3 phase fault on the L.E.S. 138kV (511467) to L.E.S. 345kV (511468)/13.8kV (511411) transformer, near the 138kV bus.	STABLE	STABLE
41	FLT45-3PH	3 phase fault on the Border (523775) to Woodword (515375) 345kV line, near Border.	STABLE	STABLE
42	FLT46-1PH	*Single phase fault and sequence like previous*	STABLE	STABLE
43	FLT49-3PH	3 phase fault on the Border (523775) to Tuco_Int (525832) 345kV line, near Border.	STABLE	STABLE
44	FLT50-1PH	*Single phase fault and sequence like previous*	STABLE	STABLE
45	FLT51-3PH	3 phase fault on the Woodword (515375) to Thistle (539801) 345kV line, ckt1, near Woodword.	STABLE	STABLE
46	FLT52-1PH	*Single phase fault and sequence like previous*	STABLE	STABLE
47	FLT53-3PH	3 phase fault on the Woodword (515375) to Mooreland (560304) 345kV line, ckt1, near Woodword.	STABLE	STABLE
48	FLT54-1PH	*Single phase fault and sequence like previous*	STABLE	STABLE
49	FLT55-3PH	3 phase fault on the Woodword (515375) to Beaver County (580500) 345kV line, ckt1, near Woodword.	STABLE	STABLE
50	FLT56-1PH	*Single phase fault and sequence like previous*	STABLE	STABLE
51	FLT57-3PH	3 phase fault on the Woodword (515375) to G11-051-Tap (562075) 345kV line, near Woodword.	STABLE	STABLE
52	FLT58-1PH	*Single phase fault and sequence like previous*	STABLE	STABLE
53	FLT59-3PH	3 phase fault on the Hitchland (523097) to Stevens (560029) 345kV line, near Hitchland.	STABLE	STABLE
54	FLT60-1PH	*Single phase fault and sequence like previous*	STABLE	STABLE
55	FLT61-3PH	3 phase fault on the Hitchland (523097) to G05-017-POI (579118) 345kV line, near Hitchland.	STABLE	STABLE
56	FLT62-1PH	*Single phase fault and sequence like previous*	STABLE	STABLE
57	FLT63-3PH	3 phase fault on the Hitchland (523097) to Beaver County (580500) 345kV line, near Hitchland.	STABLE	STABLE
58	FLT64-1PH	*Single phase fault and sequence like previous*	STABLE	STABLE
59	FLT65-3PH	3 phase fault on the Tuco_Int (525832) to G08-014-POI (560813) 345kV line, near Hitchland.	STABLE	STABLE
60	FLT66-1PH	*Single phase fault and sequence like previous*	STABLE	STABLE
61	FLT67-3PH	3 phase fault on the Hitchland 345KV (523097) to Hitchland 230 (523095) transformer, near the 345KV bus.	STABLE	STABLE

Cont. No.	Cont. Name	Description	Summer	Winter
62	FLT69-3PH	3 phase fault on the Tuco_Int 345kV (525832) to Tuco_Int 230kV (525830) transformer, near the 345kV bus.	STABLE	STABLE
63	FLT71-3PH	3 phase fault on the Hitchland (523097) to G11-021-POI (580507) 345kV line, near Hitchland.	STABLE	STABLE
64	FLT72-1PH	*Single phase fault and sequence like previous*	STABLE	STABLE
65	FLT51_2CKT-3PH	3 phase fault on the Woodword (515375) to Thistle (539801) 345kV line, ckt1&2, near Woodword.	STABLE	STABLE
66	FLT55_2CKT-3PH	3 phase fault on the Woodword (515375) to Beaver County (580500) 345kV line, ckt1, near Woodword.	STABLE	STABLE

Table 4: Contingency Simulation Results for Group 7

7.0 Power Factor Analysis

A power factor analysis was performed for each wind farm request by modeling a VAR generator at the high voltage bus of each interconnection request. The VAR generator was set to hold a voltage schedule of at least 1.00 per unit at the point of interconnection for each request. The analysis was done for both the summer and winter cases. The contingencies and results are shown in Tables 5 and 6.

Bus 521129 (POI) voltage: 1.00336 PU (S) / 1.0070 PU (W)	GEN-2011-037							
CONTINGENCY	MW (S)	MVAR (S)	PF (S)		MW (W)	MVAR (W)	PF (W)	
No contingency	105.6	-12.9	0.993	LEAD	105.6	-4.0	0.999	LEAD
Blucan (521129) to Anadarko (520814) 138kV ckt1	105.6	-2.2	1.000	LEAD	105.6	-3.5	0.999	LEAD
Blucan (521129) to Paradise (521024) 138kV ckt1	105.6	-23.8	0.976	LEAD	105.6	-12.5	0.993	LEAD
Paradise (521024) to Snyder (521025) 138kV ckt1	105.6	-20.5	0.982	LEAD	105.6	-9.9	0.996	LEAD
Snyder (521051) to Navajo (521009) 69kV ckt1	105.6	-14.6	0.991	LEAD	105.6	-5.1	0.999	LEAD
Snyder (521051) to Tipton (521070) 69kV ckt1	105.6	-16.1	0.989	LEAD	105.6	-4.1	0.999	LEAD
Snyder-4 (511435) to Altusjt (51140) 138kV ckt1	105.6	-14.3	0.991	LEAD	105.6	-4.6	0.999	LEAD
Snyder-4 (511435) to Cache (511500) 138kV ckt1	105.6	-17.1	0.987	LEAD	105.6	-10.3	0.995	LEAD
Snyder-2 (511475) to Rosvtap (511444) 69kV ckt1	105.6	-16.5	0.988	LEAD	105.6	-6.2	0.998	LEAD
Snyder-2 (511475) to Fredjc (511460) 69kV ckt1	105.6	-13.1	0.992	LEAD	105.6	-3.5	0.999	LEAD
Snyder-2 (511475) to Headric (511462) 69kV ckt1	105.6	-13.4	0.992	LEAD	105.6	-3.8	0.999	LEAD
Anadarko (520814) to S.W.S. (511477) 138kV ckt1	105.6	-12.7	0.993	LEAD	105.6	-3.2	1.000	LEAD
Anadarko (520814) to Gracmnt (515802) 138kV ckt1	105.6	-14.7	0.990	LEAD	105.6	-6.4	0.998	LEAD
Anadarko (520814) to Corn (520867) 138kV ckt1	105.6	-11.8	0.994	LEAD	105.6	-2.8	1.000	LEAD
Anadarko (520814) to Georgia (520923) 138kV ckt1	105.6	-12.2	0.993	LEAD	105.6	-1.3	1.000	LEAD
Anadarko (520814) to Pocaset (521031) 138kV ckt1	105.6	-13.0	0.993	LEAD	105.6	-3.5	0.999	LEAD
L.E.S. (511467) to O.K.U. (511465) 345kV ckt1	105.6	-3.9	0.999	LEAD	105.6	6.3	0.998	LAG
L.E.S. (511467) to Sunnysd (515136) 345kV ckt1	105.6	-14.1	0.991	LEAD	105.6	-4.6	0.999	LEAD
L.E.S. (511467) to Gracemont (515800) 345kV ckt1	105.6	-10.7	0.995	LEAD	105.6	-1.7	1.000	LEAD
Snyder 138kV (521052) to Snyder 69kV (521051) ckt1 transformer	105.6	-11.3	0.994	LEAD	105.6	0.3	1.000	LAG
Snyder 138kV (511435) to Snyder 69kV (511475) ckt1 transformer	105.6	-14.0	0.991	LEAD	105.6	-4.2	0.999	LEAD
Anadarko 138kV (520814) to Anadarko 69kV (520810) ckt1 transformer	105.6	-13.9	0.991	LEAD	105.6	-5.1	0.999	LEAD
L.E.S. 138kV (511467) to L.E.S. 345kV (511468) ckt1 transformer	105.6	-13.1	0.992	LEAD	105.6	-4.5	0.999	LEAD
Border (523775) to Woodword (515375) 345kV ckt1	105.6	-7.9	0.997	LEAD	105.6	6.9	0.998	LAG
Border (523775) to Tuco_Int (525832) 345kV ckt1	105.6	-12.5	0.993	LEAD	105.6	-0.9	1.000	LEAD
Woodword (515375) to Thistle (539801) 345kV ckt1	105.6	-12.3	0.993	LEAD	105.6	-2.1	1.000	LEAD
Woodword (515375) to Mooreland (560304) 345kV ckt1	105.6	-11.8	0.994	LEAD	105.6	-2.4	1.000	LEAD
Woodword (515375) to Beaver County (580500) 345kV ckt1	105.6	-12.7	0.993	LEAD	105.6	-2.6	1.000	LEAD
Woodword (515375) TO G11-051-TAP (562075) 345kV ckt1	105.6	-4.2	0.999	LEAD	105.6	12.0	0.994	LAG
Hitchland (523097) to Stevens (560029) 345kV ckt1	105.6	-12.7	0.993	LEAD	105.6	-2.2	1.000	LEAD
Hitchland (523097) to G05-017-POI (579118) 345kV ckt1	105.6	-10.2	0.995	LEAD	105.6	1.8	1.000	LAG
Hitchland (523097) to Beaver County (580500) 345kV ckt1	105.6	-12.2	0.993	LEAD	105.6	-1.5	1.000	LEAD
Tuco_Int (525832) to G08-014-POI (560813) 345kV ckt1	105.6	-11.0	0.995	LEAD	105.6	-4.2	0.999	LEAD

Hitchland 345KV (523097) to Hitchland 230 (523095) ckt1 transformer	105.6	-13.5	0.992	LEAD	105.6	-3.8	0.999	LEAD
Tuco_Int 345kV (525832) to Tuco_Int 230kV (525830) ckt1 transformer	105.6	-13.7	0.992	LEAD	105.6	-4.2	0.999	LEAD
Hitchland (523097) to G11-021-POI (580507) ckt1	105.6	-13.3	0.992	LEAD	105.6	-3.6	0.999	LEAD
Woodword (515375) to Thistle (539801) 345kV ckt1&2	105.6	-8.9	0.996	LEAD	105.6	2.8	1.000	LAG
Woodword (515375) to Beaver County (580500) 345kV ckt1&2	105.6	-10.9	0.995	LEAD	105.6	0.6	1.000	LAG

(S) - Summer Case
(W) - Winter Case

Lowest leading power factor
Lowest lagging power factor

Table 5: GEN-2011-037 Power Factor Table

Bus 523775 (POI) voltage: 1.02655 PU (S) / 1.01588 PU (W)	GEN-2011-049							
CONTINGENCY	MW (S)	MVAR (S)	PF (S)		MW (W)	MVAR (W)	PF (W)	
No contingency	250.7	-110.5	0.915	LEAD	250.7	-98.6	0.931	LEAD
Blucan (521129) to Anadarko (520814) 138kV ckt1	250.7	-111.0	0.914	LEAD	250.7	-97.9	0.931	LEAD
Blucan (521129) to Paradise (521024) 138kV ckt1	250.7	-111.2	0.914	LEAD	250.7	-98.6	0.931	LEAD
Paradise (521024) to Snyder (521025) 138kV ckt1	250.7	-111.2	0.914	LEAD	250.7	-98.5	0.931	LEAD
Snyder (521051) to Navajo (521009) 69kV ckt1	250.7	-111.2	0.914	LEAD	250.7	-98.5	0.931	LEAD
Snyder (521051) to Tipton (521070) 69kV ckt1	250.7	-111.1	0.914	LEAD	250.7	-98.4	0.931	LEAD
Snyder-4 (511435) to Altusjt (51140) 138kV ckt1	250.7	-110.8	0.915	LEAD	250.7	-97.8	0.932	LEAD
Snyder-4 (511435) to Cache (511500) 138kV ckt1	250.7	-110.8	0.915	LEAD	250.7	-97.8	0.932	LEAD
Snyder-2 (511475) to Rosvtap (511444) 69kV ckt1	250.7	-111.2	0.914	LEAD	250.7	-98.4	0.931	LEAD
Snyder-2 (511475) to Fredjc (511460) 69kV ckt1	250.7	-111.2	0.914	LEAD	250.7	-98.5	0.931	LEAD
Snyder-2 (511475) to Headric (511462) 69kV ckt1	250.7	-111.2	0.914	LEAD	250.7	-98.5	0.931	LEAD
Anadarko (520814) to S.W.S. (511477) 138kV ckt1	250.7	-111.2	0.914	LEAD	250.7	-98.5	0.931	LEAD
Anadarko (520814) to Gracmnt (515802) 138kV ckt1	250.7	-110.9	0.915	LEAD	250.7	-98.2	0.931	LEAD
Anadarko (520814) to Corn (520867) 138kV ckt1	250.7	-110.6	0.915	LEAD	250.7	-98.0	0.931	LEAD
Anadarko (520814) to Georgia (520923) 138kV ckt1	250.7	-110.7	0.915	LEAD	250.7	-97.9	0.931	LEAD
Anadarko (520814) to Pocaset (521031) 138kV ckt1	250.7	-109.5	0.916	LEAD	250.7	-96.5	0.933	LEAD
L.E.S. (511467) to O.K.U. (511465) 345kV ckt1	250.7	-17.2	0.998	LEAD	250.7	36.8	0.989	LAG
L.E.S. (511467) to Sunnysd (515136) 345kV ckt1	250.7	-103.0	0.925	LEAD	250.7	-86.8	0.945	LEAD
L.E.S. (511467) to Gracemont (515800) 345kV ckt1	250.7	-110.8	0.915	LEAD	250.7	-97.5	0.932	LEAD
Snyder 138kV (521052) to Snyder 69kV (521051) ckt1 transformer	250.7	-111.2	0.914	LEAD	250.7	-98.6	0.931	LEAD
Snyder 138kV (511435) to Snyder 69kV (511475) ckt1 transformer	250.7	-111.1	0.914	LEAD	250.7	-98.4	0.931	LEAD
Anadarko 138kV (520814) to Anadarko 69kV (520810) ckt1 transformer	250.7	-111.2	0.914	LEAD	250.7	-98.5	0.931	LEAD
L.E.S. 138kV (511467) to L.E.S. 345kV (511468) ckt1 transformer	250.7	-111.2	0.914	LEAD	250.7	-98.5	0.931	LEAD
Border (523775) to Woodword (515375) 345kV ckt1	250.7	-16.7	0.998	LEAD	250.7	5.7	1.000	LAG
Border (523775) to Tuco_Int (525832) 345kV ckt1	250.7	-87.0	0.945	LEAD	250.7	-102.7	0.925	LEAD
Woodword (515375) to Thistle (539801) 345kV ckt1	250.7	-101.2	0.927	LEAD	250.7	-88.5	0.943	LEAD
Woodword (515375) to Mooreland (560304) 345kV ckt1	250.7	-114.3	0.910	LEAD	250.7	-99.7	0.929	LEAD
Woodword (515375) to Beaver County (580500) 345kV ckt1	250.7	-98.4	0.931	LEAD	250.7	-81.9	0.951	LEAD
Woodword (515375) TO G11-051-TAP (562075) 345kV ckt1	250.7	-115.9	0.908	LEAD	250.7	-109.6	0.916	LEAD
Hitchland (523097) to Stevens (560029) 345kV ckt1	250.7	-106.9	0.920	LEAD	250.7	-91.1	0.940	LEAD
Hitchland (523097) to G05-017-POI (579118) 345kV ckt1	250.7	-106.5	0.920	LEAD	250.7	-87.9	0.944	LEAD
Hitchland (523097) to Beaver County (580500) 345kV ckt1	250.7	-111.4	0.914	LEAD	250.7	-94.8	0.935	LEAD

Tuco_Int (525832) to G08-014-POI (560813) 345kV ckt1	250.7	-68.2	0.965	LEAD	250.7	-27.9	0.994	LEAD
Hitchland 345KV (523097) to Hitchland 230 (523095) ckt1 transformer	250.7	-111.4	0.914	LEAD	250.7	-98.7	0.930	LEAD
Tuco_Int 345kV (525832) to Tuco_Int 230kV (525830) ckt1 transformer	250.7	-120.6	0.901	LEAD	250.7	-109.0	0.917	LEAD
Hitchland (523097) to G11-021-POI (580507) ckt1	250.7	-110.1	0.916	LEAD	250.7	-96.5	0.933	LEAD
Woodword (515375) to Thistle (539801) 345kV ckt1&2	250.7	-94.4	0.936	LEAD	250.7	-81.0	0.952	LEAD
Woodword (515375) to Beaver County (580500) 345kV ckt1&2	250.7	-84.5	0.948	LEAD	250.7	-61.3	0.971	LEAD

(S) - Summer Case
(W) - Winter Case

Lowest leading power factor
Lowest lagging power factor

Table 6: GEN-2011-047 Power Factor Table

8.0 Conclusion

A transient stability study has been performed by Southwest Power Pool (SPP) to evaluate the interconnection requests in the Definitive Impact Study Interconnection Study (DISIS-2011-002) for Group 7 in the Southwestern Oklahoma area.

The DISIS-2011-002 study has two (2) Interconnection Requests in the Southwestern Oklahoma area. The interconnection requests include GEN-2011-037 and GEN-2011-047. The interconnection requests in DISIS-2011-002 Group 7 are dispatching 356.3MW.

The results of a stability analysis determined that for the addition of the DISIS-2011-002 interconnection requests, the transmission system was found to remain stable for both summer and winter peak conditions with all required network upgrades in service. Additionally, the projects that were wind farms were found to stay connected during the contingencies that were studied, meeting the Low Voltage Ride Through (LVRT) requirements of FERC Order #661A.

The power factor analysis indicated that all DISIS-2011-002 interconnection requests will be required to maintain 95% lagging (producing vars) and 95% leading (absorbing vars) power factor at the point of interconnection. The final power factor analyses are shown in Tables 5 and 6.

If any previously queued projects that were included in this study drop out, then this System Impact Study may have to be revised to determine the impacts of this Interconnection Customer's project on transmission facilities. In accordance with FERC and SPP procedures, the study cost for restudy shall be borne by the Interconnection Customer.

P: Stability Study for Group 8

See next page.

Final Report

For

Southwest Power Pool

From

S&C Electric Company

DEFINITIVE IMPACT STUDY
DISIS-2011-002 (Group 8)

S&C Project No. 5945

January 24, 2012

S&C Electric Company

©2011 S&C Electric Company. All rights reserved. Permission is granted to Southwest Power Pool to copy this document or excerpt there from as required to facilitate the work related to the subject project.

S&C Electric Company, Chicago, IL 60626-3997, Phone: (773) 338-1000
Power Systems Services Division Fax: (773) 338-4254

TABLE OF CONTENTS

EXECUTIVE SUMMARY **4**

1. INTRODUCTION **5**

2. TRANSMISSION SYSTEM AND STUDY AREA **5**

3. POWER FLOW BASE CASES **6**

4. POWER FLOW MODEL **6**

4.1 SIEMENS SWT 2.3 MW / 60 HZ WIND TURBINE GENERATOR 6

4.1 GE 1.6XLE / 60 HZ WIND TURBINE GENERATOR 7

5. POWER FACTOR REQUIREMENTS AT THE POINT OF INTERCONNECTION **7**

5.1 FACILITY OUTAGE CONTINGENCIES 7

6. TRANSIENT STABILITY ANALYSIS **12**

6.1 STABILITY CRITERIA 17

6.2 TRANSIENT STABILITY RESULTS 18

7. CONCLUSIONS AND RECOMMENDATIONS **20**

APPENDICES ..... ERROR! BOOKMARK NOT DEFINED.

APPENDIX A – GROUP 8 PROJECT DATA ..... ERROR! BOOKMARK NOT DEFINED.

APPENDIX B –STABILITY PLOTS FOR SUMMER 2010/2011 ..... ERROR! BOOKMARK NOT DEFINED.

APPENDIX C –STABILITY PLOTS FOR WINTER 2010/2011 ..... ERROR! BOOKMARK NOT DEFINED.

Report Revision History:

Date of Report	Issue	Comments
January 17, 2012	Rev. A	Preliminary report issued for review and approval
January 24, 2012	Rev. 0	Final report issued

Prepared by:	Reviewed by:
Saeed Kamalinia Project Engineer Consulting and Analytical Services S&C Electric Company	George S. Tsai Li Senior Engineer Power System Services S&C Electric Company
	Approved by: Terrance A. Bellei Manager Consulting and Analytical Services S&C Electric Company

EXECUTIVE SUMMARY

S&C Electric Company has performed an interconnection impact Study for the Definitive Impact Study DISIS-2011-002 (Group 8) in response to a request through the Southwest Power Pool (SPP) tariff studies. Group 8 includes three interconnection wind-farm projects.

Group 8 and prior-queued projects in the Oklahoma Gas and Electric (OKGE) area were studied at 100% output power using 2010/2011 summer and winter peak loading cases provided by SPP.

SPP requires that interconnection request projects meet a voltage schedule at the point of interconnection (POI) consistent with the voltage in the SPP base case or nominal voltage, whichever is higher. The power factor requirements are for N-1 (or N-2 contingencies if applicable) contingencies specified by SPP. Power Factor analysis for the study projects revealed that the generating facilities must meet the following requirements to maintain nominal voltage at the POI:

- GEN-2011-041 is required to maintain a power factor of 97.1% lagging to 95% leading at the POI.
- GEN-2011-042 is required to maintain a power factor of 97.1% lagging to 95% leading at the POI.
- GEN-2011-057 is required to maintain a power factor of 97.1% lagging up to 98.7% leading at the POI.

Transient stability analysis indicates that Group 8 is expected to successfully ride-through each N-1 fault contingency specified by SPP and the nearby areas will retain angular, frequency and voltage stability. Group 8 is expected to successfully interconnect into the transmission system at the desired location without reduction in output power. Non-convergence in the simulations, caused by numerical instability of prior queued generator user models, was alleviated by replacing the suspect models with a generic generator model.

1. INTRODUCTION

S&C Electric Company has performed an interconnection impact study for the Definitive Impact Study DISIS-2011-002 (Group 8) in response to a request through the Southwest Power Pool (SPP) Tariff studies. Group 8 includes projects as follows.

Table 1.1: Study Projects in Group 8

Project	Size (MW)	Wind Turbine Model	Point of Interconnection
GEN-2011-041	149.5	Siemens 2.3MW	Tap Wichita – Woodring 345kV line
GEN-2011-042	149.5	Siemens 2.3MW	Tap Wichita – Woodring 345kV line
GEN-2011-057	150.4	GE 1.6MW	Creswell 138kV

Group 8 and prior queued projects in the Westar Energy, Inc. (WERE) area were studied at 100% output power using 2010/2011 summer and winter peak loading cases provided by SPP.

2. TRANSMISSION SYSTEM AND STUDY AREA

The wind generation projects in Group 8 will interconnect into WERE. In addition to the WERE area, the following areas were monitored:

AEP West (AEPW)

Sunflower Electric Power Company (SUNC)

Western Farmers Electric Cooperative (WFEC)

Southwestern Public Service (SPS)

Midwest Energy, Inc. (MIDW)

Oklahoma Gas and Electric (OKGE)

3. POWER FLOW BASE CASES

The following power flow base cases were provided by SPP:

MDWG_2011_2012SP_G8.sav – Summer peak 2010/2011, which includes aggregate representation of wind-turbine generators for Definitive Impact Study DISIS-2011-002 (Group 8) and prior queued projects at 100% output power.

MDWG_2011_2012WP_G8.sav – Winter peak 2010/2011, which includes aggregate representation of wind-turbine generators for Definitive Impact Study DISIS-2011-002 (Group 8) and prior queued projects at 100% output power.

4. POWER FLOW MODEL

Definitive Impact Study DISIS-2011-002 (Group 8) and prior queued projects were modeled as aggregates of wind-turbine generators. The aggregate models were part of the base case supplied by SPP. Single-line diagrams and other information corresponding to the Group 8 project can be found in Appendix A.

4.1 Siemens SWT 2.3 MW / 60 Hz Wind Turbine Generator

The SWT WTG consists of a rotor, gearbox, induction generator, machine bridge, DC link, and network bridge. The machine bridge and network bridge decouple the generator from the power system and allows the WTG to operate at a definite power factor setpoint. The power factor range of operation in steady-state and dynamically is variable and is a function of the voltage at the generator terminals and the active power output of the generator. At rated output power and at nominal terminal voltage, the output power factor range varies from 90% leading (inductive) to 90% lagging (capacitive) power factor. The lagging power factor range is reduced if the terminal voltage is higher than nominal. The leading power factor range is reduced if the terminal voltage is less than nominal and increased if the terminal voltage is greater than nominal. In this study the Siemens machines are modeled as a generator with an aggregated wind-farm's power output.

4.1 GE 1.6xle / 60 Hz Wind Turbine Generator

The GE 1.6xle WTG consists of a single rotor branch (single cage) doubly-fed (wound rotor) induction generator machine. In the model the Mvar generation will be calculated by either one of the operating modes: voltage control mode, or power factor control mode. This turbine has a rotor diameter of 82.5 m. In this study the GE machines are modeled as a generator with an aggregated wind-farm's power output.

5. Power Factor Requirements at the Point of Interconnection

SPP has specific voltage requirements for interconnecting wind farm requests. Such projects are required to meet a voltage schedule at the POI consistent with the voltage in the SPP base case or nominal voltage, whichever is higher, for single (or N-2, if applicable) transmission facility outage contingencies specified by SPP.

5.1 Facility Outage Contingencies

The base case voltages at the point of interconnection for summer and winter are listed in Table 5.1.

Single transmission facility outage contingencies specified by SPP are listed in Table 5.2.

Table 5.1: Base Case Voltage at the Point of Interconnection

Point of Interconnection	Summer Peak 2010/2011 (pu)	Winter Peak 2010/2011 (pu)
Tap Wichita – Woodring 345 kV line	0.977	0.975
Creswell 138kV	1.017	1.009

Table 5.2: List of Outages for Power-Factor Analysis

Cont. No.	Description
0	System Intact
1	Outage of the G07-025POI (579267) to Wichita (532796) 345 kV line
2	Outage of the G07-025POI (579267) to G08-013POI (579406) 345 kV line
3	Outage of the G08-013POI (579406) to Woodring (514715) 345 kV line
4	Outage of the Woodring (514715) to Sooner (514803) 345 kV line
5	Outage of the Woodring (514715) to Mathewson (560368) 345 kV line
6	Outage of the Wichita (532796) to EMPEC (532768) 345 kV line
7	Outage of the Wichita (532796) to Reno (532771) 345 kV line
8	Outage of the Wichita (532796) to Benton (532791) 345 kV line
9	Outage of the Wichita (532796) to Thistle (539801) 345 kV line ckt 1
10	Outage of the Wichita (532796) to Thistle (539801) 345 kV line ckt 1&2
11	Outage of the Creswell (532981) to Middleton (514804) 138 kV line
12	Outage of the Creswell (532981) to Oxford (532982) 138 kV line
13	Outage of the Newkirk (514759) to Kildare (514760) 138 kV line
14	Outage of the Newkirk (514759) to OMNUKRK (529290) 138 kV line
15	Outage of the Kildare (514760) to Chikasia (514757) 138 kV line
16	Outage of the Oxford (532982) to Sumner (532984) 138 kV line
17	Outage of the Sumner (532984) to Timber Junction (532992) 138 kV line
18	Outage of the El Paso (533039) to Farber (533042) 138 kV line
19	Outage of the Timber Junction (532984) to Timber Junction (532992) 138 kV line
20	Outage of the Timber Junction 138 kV (532992) to Timber Junction 69 kV (533558) transformer
21	Outage of the Creswell 138 kV (532981) to Creswell 69 kV (533543)/13.2 kV (533080) transformer
22	Outage of the Chikasia 138 kV (514757) to Chikasia 69 kV (514756)/13.2 kV (515713) transformer
23	Outage of the Woodring 345 kV (514715) to 138 kV (514714) transformer
24	Outage of the Wichita 345 kV (532796) to Evans 138 kV (533040)/13.8 kV (532830) transformer

Table 5.3: Power Factor Requirements at the POI for Outages in Table 5.2 for GEN-2011-041

Cont. No.	Summer				Winter			
	P (MW)	Q (Mvar)	Power Factor		P (MW)	Q (Mvar)	Power Factor	
0	-149.5	54.4	94.0%	leading	-149.5	38.9	96.8%	leading
1	-149.5	-3.3	100.0%	lagging	-149.5	-12.4	99.7%	lagging
2	-149.5	-7.7	99.9%	lagging	-149.5	-17.2	99.3%	lagging
3	-149.5	-20.9	99.0%	lagging	-149.5	-37.1	97.1%	lagging
4	-149.5	50.1	94.8%	leading	-149.5	31.5	97.9%	leading
5	-149.5	52.9	94.3%	leading	-149.5	46.0	95.6%	leading
6	-149.5	48.9	95.0%	leading	-149.5	29.1	98.2%	leading
7	-149.5	40.5	96.5%	leading	-149.5	15.4	99.5%	leading
8	-149.5	61.7	92.4%	leading	-149.5	55.3	93.8%	leading
9	-149.5	42.5	96.2%	leading	-149.5	19.7	99.1%	leading
10	-149.5	54.4	94.0%	leading	-149.5	38.9	96.8%	leading
11	-149.5	54.3	94.0%	leading	-149.5	38.8	96.8%	leading
12	-149.5	53.9	94.1%	leading	-149.5	37.6	97.0%	leading
13	-149.5	54.2	94.0%	leading	-149.5	38.6	96.8%	leading
14	-149.5	54.4	94.0%	leading	-149.5	38.9	96.8%	leading
15	-149.5	54.3	94.0%	leading	-149.5	38.8	96.8%	leading
16	-149.5	53.9	94.1%	leading	-149.5	37.3	97.0%	leading
17	-149.5	54.2	94.0%	leading	-149.5	38.7	96.8%	leading
18	-149.5	54.1	94.0%	leading	-149.5	37.7	97.0%	leading
19	-149.5	54.2	94.0%	leading	-149.5	38.7	96.8%	leading
20	-149.5	54.3	94.0%	leading	-149.5	38.8	96.8%	leading
21	-149.5	54.4	94.0%	leading	-149.5	38.7	96.8%	leading
22	-149.5	54.3	94.0%	leading	-149.5	38.8	96.8%	leading
23	-149.5	55.9	93.7%	leading	-149.5	39.0	96.8%	leading
24	-149.5	64.5	91.8%	leading	-149.5	38.7	96.8%	leading

Table 5.4: Power Factor Requirements at the POI for Outages in Table 5.2 for GEN-2011-042

Cont. No.	Summer				Winter			
	P (MW)	Q (Mvar)	Power Factor		P (MW)	Q (Mvar)	Power Factor	
0	-149.5	54.4	94.0%	leading	-149.5	38.9	96.8%	leading
1	-149.5	-3.3	100.0%	lagging	-149.5	-12.4	99.7%	lagging
2	-149.5	-7.7	99.9%	lagging	-149.5	-17.2	99.3%	lagging
3	-149.5	-20.9	99.0%	lagging	-149.5	-37.1	97.1%	lagging
4	-149.5	50.1	94.8%	leading	-149.5	31.5	97.9%	leading
5	-149.5	52.9	94.3%	leading	-149.5	46.0	95.6%	leading
6	-149.5	48.9	95.0%	leading	-149.5	29.1	98.2%	leading
7	-149.5	40.5	96.5%	leading	-149.5	15.4	99.5%	leading
8	-149.5	61.7	92.4%	leading	-149.5	55.3	93.8%	leading
9	-149.5	42.5	96.2%	leading	-149.5	19.7	99.1%	leading
10	-149.5	54.4	94.0%	leading	-149.5	38.9	96.8%	leading
11	-149.5	54.3	94.0%	leading	-149.5	38.8	96.8%	leading
12	-149.5	53.9	94.1%	leading	-149.5	37.6	97.0%	leading
13	-149.5	54.2	94.0%	leading	-149.5	38.6	96.8%	leading
14	-149.5	54.4	94.0%	leading	-149.5	38.9	96.8%	leading
15	-149.5	54.3	94.0%	leading	-149.5	38.8	96.8%	leading
16	-149.5	53.9	94.1%	leading	-149.5	37.3	97.0%	leading
17	-149.5	54.2	94.0%	leading	-149.5	38.7	96.8%	leading
18	-149.5	54.1	94.0%	leading	-149.5	37.7	97.0%	leading
19	-149.5	54.2	94.0%	leading	-149.5	38.7	96.8%	leading
20	-149.5	54.3	94.0%	leading	-149.5	38.8	96.8%	leading
21	-149.5	54.4	94.0%	leading	-149.5	38.7	96.8%	leading
22	-149.5	54.3	94.0%	leading	-149.5	38.8	96.8%	leading
23	-149.5	55.9	93.7%	leading	-149.5	39.0	96.8%	leading
24	-149.5	64.5	91.8%	leading	-149.5	38.7	96.8%	leading

Table 5.5: Power Factor Requirements at the POI for Outages in Table 5.2 for GEN-2011-057

Cont. No.	Summer				Winter			
	P (MW)	Q (Mvar)	Power Factor		P (MW)	Q (Mvar)	Power Factor	
0	-150.4	-1.3	100.0%	lagging	-150.4	-1.4	100.0%	lagging
1	-150.4	-4.3	100.0%	lagging	-150.4	-4.4	100.0%	lagging
2	-150.4	-0.9	100.0%	lagging	-150.4	-4.4	100.0%	lagging
3	-150.4	-2.5	100.0%	lagging	-150.4	-9.6	99.8%	lagging
4	-150.4	-1.4	100.0%	lagging	-150.4	-2.1	100.0%	lagging
5	-150.4	-1.8	100.0%	lagging	-150.4	-1.8	100.0%	lagging
6	-150.4	-1.7	100.0%	lagging	-150.4	-3.6	100.0%	lagging
7	-150.4	-2.6	100.0%	lagging	-150.4	-7.1	99.9%	lagging
8	-150.4	-7.5	99.9%	lagging	-150.4	-9.5	99.8%	lagging
9	-150.4	-2.8	100.0%	lagging	-150.4	-6.9	99.9%	lagging
10	-150.4	-1.3	100.0%	lagging	-150.4	-1.4	100.0%	lagging
11	-150.4	24.6	98.7%	leading	-150.4	20.8	99.1%	leading
12	-150.4	-29.9	98.1%	lagging	-150.4	-37.2	97.1%	lagging
13	-150.4	3.2	100.0%	leading	-150.4	-1.6	100.0%	leading
14	-150.4	-1.3	100.0%	lagging	-150.4	-1.4	100.0%	lagging
15	-150.4	1.9	100.0%	leading	-150.4	4.8	99.9%	leading
16	-150.4	16.3	99.4%	leading	-150.4	9.4	99.8%	leading
17	-150.4	2.0	100.0%	leading	-150.4	-1.3	100.0%	leading
18	-150.4	7.7	99.9%	leading	-150.4	11.8	99.7%	leading
19	-150.4	2.0	100.0%	leading	-150.4	-1.3	100.0%	leading
20	-150.4	1.0	100.0%	leading	-150.4	-0.1	100.0%	leading
21	-150.4	-3.3	100.0%	lagging	-150.4	-2.3	100.0%	lagging
22	-150.4	2.2	100.0%	leading	-150.4	5.1	99.9%	leading
23	-150.4	-1.0	100.0%	lagging	-150.4	-0.8	100.0%	lagging
24	-150.4	-0.7	100.0%	lagging	-150.4	-7.3	99.9%	lagging

The power factor required to maintain a voltage schedule at the POI of 1.0 per unit voltage in accordance with SPP requirements for each of the power flow contingencies in Table 5.2 is listed in Tables 5.3 through 5.5. Contingency cases in which required power factor exceed 95% were highlighted in the tables. Wind farms are not typically required according to FERC 661-A to operate at the POI beyond a power factor range of ±95% for voltages from 95 to 105% of nominal. To deliver additional capacitive reactive power in order to meet the schedule at the POI of 1.0 per unit voltage, external sources of reactive power such as capacitor banks could be needed.

Power Factor analysis indicates the following,

- GEN-2011-041 is required to maintain a power factor of 97.1% lagging to 95% leading at the POI.
- GEN-2011-042 is required to maintain a power factor of 97.1% lagging to 95% leading at the POI.
- GEN-2011-057 is required to maintain a power factor of 97.1% lagging up to 98.7% leading at the POI.

6. Transient Stability Analysis

Transient stability analysis was performed for the fault contingencies in Table 6.1, which were specified by SPP. For the purpose of the transient stability analysis, each of the interconnection request projects was studied with the required lagging power factor at the POI from power factor analysis.

Table 6.1: SPP fault contingencies

Cont. No.	Cont. Name	Description
1	FLT01-3PH (see note at end of table)	3 phase fault on the G07-025POI (579267) to Wichita (532796) 345kV line, near G07-025POI. a. Apply fault at the G07-025POI 345kV bus. b. Clear fault after 5 cycles by tripping the faulted line. c. Wait 20 cycles, and then re-close the line in (b) back into the fault. d. Leave fault on for 5 cycles, then trip the line in (b) and remove fault.
2	FLT02-1PH	*Single phase fault and sequence like previous*

Cont. No.	Cont. Name	Description
3	FLT03-3PH	3 phase fault on the G07-025POI (579267) to G08-013POI (579406) 345kV line, near G07-025POI. a. Apply fault at the G07-025POI 345kV bus. b. Clear fault after 5 cycles by tripping the faulted line. c. Wait 20 cycles, and then re-close the line in (b) back into the fault. d. Leave fault on for 5 cycles, then trip the line in (b) and remove fault.
4	FLT04-1PH	*Single phase fault and sequence like previous*
5	FLT05-3PH	3 phase fault on the G08-013POI (579406) to Woodring (514715) 345kV line, near G08-013POI. a. Apply fault at the G08-013POI 345kV bus. b. Clear fault after 5 cycles by tripping the faulted line. c. Wait 20 cycles, and then re-close the line in (b) back into the fault. d. Leave fault on for 5 cycles, then trip the line in (b) and remove fault.
6	FLT06-1PH	*Single phase fault and sequence like previous*
7	FLT07-3PH	3 phase fault on the Woodring (514715) to Sooner (514803) 345kV line, near Woodring. a. Apply fault at the Woodring 345kV bus. b. Clear fault after 5 cycles by tripping the faulted line. c. Wait 20 cycles, and then re-close the line in (b) back into the fault. d. Leave fault on for 5 cycles, then trip the line in (b) and remove fault.
8	FLT08-1PH	*Single phase fault and sequence like previous*
9	FLT09-3PH	3 phase fault on the Woodring (514715) to Mathewson (560368) 345kV line, near Woodring. a. Apply fault at the Woodring 345kV bus. b. Clear fault after 5 cycles by tripping the faulted line. c. Wait 20 cycles, and then re-close the line in (b) back into the fault. d. Leave fault on for 5 cycles, then trip the line in (b) and remove fault.
10	FLT10-1PH	*Single phase fault and sequence like previous*
11	FLT11-3PH (see note at end of table)	3 phase fault on the Wichita (532796) to EMPEC (532768) 345kV line, near Wichita. a. Apply fault at the Wichita 345kV bus. b. Clear fault after 5 cycles by tripping the faulted line. c. Wait 20 cycles, and then re-close the line in (b) back into the fault. d. Leave fault on for 5 cycles, then trip the line in (b) and remove fault.
12	FLT12-1PH	*Single phase fault and sequence like previous*
13	FLT13-3PH (see note at end of table)	3 phase fault on the Wichita (532796) to Reno (532771) 345kV line, near Wichita. a. Apply fault at the Wichita 345kV bus. b. Clear fault after 5 cycles by tripping the faulted line. c. Wait 20 cycles, and then re-close the line in (b) back into the fault. d. Leave fault on for 5 cycles, then trip the line in (b) and remove fault.
14	FLT14-1PH	*Single phase fault and sequence like previous*

Cont. No.	Cont. Name	Description
15	FLT15-3PH (see note at end of table)	3 phase fault on the Wichita (532796) to Benton (532791) 345kV line, near Wichita. a. Apply fault at the Wichita 345kV bus. b. Clear fault after 5 cycles by tripping the faulted line. c. Wait 20 cycles, and then re-close the line in (b) back into the fault. d. Leave fault on for 5 cycles, then trip the line in (b) and remove fault.
16	FLT16-1PH	*Single phase fault and sequence like previous*
17	FLT17-3PH (see note at end of table)	3 phase fault on the Wichita (532796) to Thistle (539801) 345kV line ckt 1, near Wichita. a. Apply fault at the Wichita 345kV bus, ckt1. b. Clear fault after 5 cycles by tripping the faulted line. c. Wait 20 cycles, and then re-close the line in (b) back into the fault. d. Leave fault on for 5 cycles, then trip the line in (b) and remove fault.
18	FLT18-1PH	*Single phase fault and sequence like previous*
19	FLT19-3PH (see note at end of table)	3 phase fault on the Wichita (532796) to Thistle (539801) 345kV line ckt 1&2, near Wichita. a. Apply fault at the Wichita 345kV bus. b. Clear fault after 5 cycles by tripping the faulted line. c. Wait 20 cycles, and then re-close the line in (b) back into the fault. d. Leave fault on for 5 cycles, then trip the line in (b) and remove fault.
20	FLT20-1PH	*Single phase fault and sequence like previous*
21	FLT21-3PH	3 phase fault on the Creswell (532981) to Middleton (514804) 138kV line, near Creswell. a. Apply fault at the Creswell 138kV bus. b. Clear fault after 3 cycles by tripping the faulted line. c. Wait 20 cycles, and then re-close the line in (b) back into the fault. d. Leave fault on for 3 cycles, then trip the line in (b) and remove fault.
22	FLT22-1PH	*Single phase fault and sequence like previous*
23	FLT23-3PH	3 phase fault on the Creswell (532981) to Oxford (532982) 138kV line, near Creswell. a. Apply fault at the Creswell 138kV bus. b. Clear fault after 3 cycles by tripping the faulted line. c. Wait 20 cycles, and then re-close the line in (b) back into the fault. d. Leave fault on for 3 cycles, then trip the line in (b) and remove fault.
24	FLT24-1PH	*Single phase fault and sequence like previous*
25	FLT29-3PH	3 phase fault on the Newkirk (514759) to Kildare (514760) 138kV line, near Newkirk. a. Apply fault at the Newkirk 138kV bus. b. Clear fault after 3 cycles by tripping the faulted line. c. Wait 20 cycles, and then re-close the line in (b) back into the fault. d. Leave fault on for 3 cycles, then trip the line in (b) and remove fault.
26	FLT30-1PH	*Single phase fault and sequence like previous*
27	FLT31-3PH	3 phase fault on the Newkirk (514759) to OMNUKRK (529290) 138kV line, near Newkirk. a. Apply fault at the Newkirk 138kV bus. b. Clear fault after 3 cycles by tripping the faulted line. c. Wait 20 cycles, and then re-close the line in (b) back into the fault. d. Leave fault on for 3 cycles, then trip the line in (b) and remove fault.

Cont. No.	Cont. Name	Description
28	FLT32-1PH	*Single phase fault and sequence like previous*
29	FLT33-3PH	3 phase fault on the Kildare (514760) to Chikasia (514757) 138kV line, near Kildare. a. Apply fault at the Kildare 138kV bus. b. Clear fault after 3 cycles by tripping the faulted line. c. Wait 20 cycles, and then re-close the line in (b) back into the fault. d. Leave fault on for 3 cycles, then trip the line in (b) and remove fault.
30	FLT34-1PH	*Single phase fault and sequence like previous*
31	FLT35-3PH	3 phase fault on the Oxford (532982) to Sumner (532984) 138kV line, near Oxford. a. Apply fault at the Oxford 138kV bus. b. Clear fault after 3 cycles by tripping the faulted line. c. Wait 20 cycles, and then re-close the line in (b) back into the fault. d. Leave fault on for 3 cycles, then trip the line in (b) and remove fault.
32	FLT36-1PH	*Single phase fault and sequence like previous*
33	FLT37-3PH	3 phase fault on the Sumner (532984) to Timber Junction (532992) 138kV line, near Sumner. a. Apply fault at the Sumner 138kV bus. b. Clear fault after 3 cycles by tripping the faulted line. c. Wait 20 cycles, and then re-close the line in (b) back into the fault. d. Leave fault on for 3 cycles, then trip the line in (b) and remove fault.
34	FLT38-1PH	*Single phase fault and sequence like previous*
35	FLT39-3PH	3 phase fault on the El Paso (533039) to Farber (533042) 138kV line, near El Paso. a. Apply fault at the El Paso 138kV bus. b. Clear fault after 3 cycles by tripping the faulted line. c. Wait 20 cycles, and then re-close the line in (b) back into the fault. d. Leave fault on for 3 cycles, then trip the line in (b) and remove fault.
36	FLT40-1PH	*Single phase fault and sequence like previous*
37	FLT41-3PH	3 phase fault on the Timber Junction (532984) to Timber Junction (532992) 138kV line, near Timber Junction. a. Apply fault at the Timber Junction 138kV bus. b. Clear fault after 3 cycles by tripping the faulted line. c. Wait 20 cycles, and then re-close the line in (b) back into the fault. d. Leave fault on for 3 cycles, then trip the line in (b) and remove fault.
38	FLT42-1PH	*Single phase fault and sequence like previous*
39	FLT43-3PH	3 phase fault on the Timber Junction 138kV (532992) to Timber Junction 69 kV (533558) transformer near the 69kV bus. a. Apply fault at the Timber Junction 69kV bus. b. Clear fault after 5 cycles by tripping the faulted line.
40	FLT44-3PH	3 phase fault on the Creswell 138kV (532981) to Creswell 69kV (533543)/13.2kV (533080) transformer near the 138kV bus. a. Apply fault at the Creswell 138kV bus. b. Clear fault after 5 cycles by tripping the faulted line.

Cont. No.	Cont. Name	Description
41	FLT45-3PH	3 phase fault on the Chikasia 138kV (514757) to Chikasia 69kV (514756)/13.2kV (515713) transformer near the 138kV bus. a. Apply fault at the Chikasia 138kV bus. b. Clear fault after 5 cycles by tripping the faulted line.
42	FLT46-3PH	3 phase fault on the Woodring 345kV (514715) to 138 kV (514714) transformer near the 138kV bus. a. Apply fault at the Woodring 138kV bus. b. Clear fault after 5 cycles by tripping the faulted line.
43	FLT47-3PH	3 phase fault on the Wichita 345kV (532796) to Evans 138 kV (533040)/13.8kV (532830) transformer near the 138kV bus. a. Apply fault at the Evans 138kV bus. b. Clear fault after 5 cycles by tripping the faulted line.

Single line to ground faults were simulated in a manner consistent with currently accepted practices, that is to assume that a single line to ground will cause a voltage drop at the fault location to 60% of nominal.

The prior queued projects monitored are listed in Table 6.2.

Table 6.2: Prior queued wind farm projects monitored

Request	Size (MW)	Wind Turbine Model	Point of Interconnection
GEN-2002-004	199.5	GE.1.5MW	Latham 345kV (532800)
GEN-2005-013	199.8	Vestas V90 1.8MW	Tap on the Latham – Neosho 345kV line (574000)
GEN-2007-025	299.2	GE 1.6MW	Tap on the Wichita – Woodring 345kV line (G07-025 POI, 579267)
GEN-2008-013	300	G.E. 1.5MW	Tap on the Wichita – Woodring 345kV line (579406)
GEN-2008-021	1231 Summer 1173.17 Winter	GENROU	Wolf Creek 345kV (532797)
GEN-2008-127	200.1	Siemens 2.3MW	Tap on the Sooner – Rose Hill 345kV line (573039)
GEN-2009-025	59.8	Siemens 2.3MW	Tap on the Deerck – Sincblk 69KV line (573049)
GEN-2008-071	76.8	GE 1.6MW	Newkirk 138kV (514759)
GEN-2008-098	100.8	Vestas V90 1.8MW	Tap on the Wolf Creek – LaCygne 345kV line (572090)
GEN-2010-003	100.8	Vestas V90 1.8MW	Tap on the Wolf Creek – LaCygne 345kV line (572090)
GEN-2010-005	299.2	GE 1.6MW	Tap on the Wichita – Woodring 345kV line (G07-025 POI, 579267)
GEN-2010-055	4.5	GENROU	Wekiwa 138kV (509757)

Tables 6.3 and 6.4 list protection relay settings were used to evaluate fault ride-through capability of WTGs in transient stability analysis.

Table 6.3: Siemens SWT 2.3 MW Protection Settings (PSS/E Model Version 1.3)

Relay Type	Trip Setting	Time Setting (sec)
Undervoltage	0.85 (pu)	3.0
Undervoltage	0.40 (pu)	1.6
Undervoltage	0.15 (pu)	0.85
Overvoltage	1.2 (pu)	0.15
Overvoltage	1.10 (pu)	1.0
Underfrequency	57.0 (Hz)	10
Underfrequency	56.4 (Hz)	0.1
Overfrequency	62.4 (Hz)	0.1

Table 6.4: GE 1.6xle Protection Settings

Relay Type	Trip Setting	Time Delay (sec)
Undervoltage	0.75 (pu)	1.9
Undervoltage	0.50 (pu)	1.2
Undervoltage	0.30 (pu)	0.7
Undervoltage	0.15 (pu)	0.2
Overvoltage	1.15 (pu)	0.1
Overvoltage	1.10 (pu)	1.0

6.1 Stability Criteria

Disturbances including three-phase and single-phase to ground faults should not cause synchronous and asynchronous plants to become unstable or disconnect from the transmission grid.

The criterion for synchronous generator stability as defined by NERC is:

“Power system stability is defined as that condition in which the difference of the angular positions of synchronous machine rotor becomes constant following an aperiodic system disturbance.”

Voltage magnitudes and frequencies at terminals of asynchronous generators should not exceed magnitudes and durations that will cause protection elements to operate. Furthermore, the response after the disturbance needs to be studied at the terminals of the machine to insure that there are no sustained oscillations in power output, speed, frequency, etc.

Voltage magnitudes and angles after the disturbance should settle to a constant and acceptable operating level. Frequencies should settle to the nominal 60 Hz power frequency.

6.2 Transient Stability Results

Undisturbed runs of 20 seconds were performed with the summer and winter peak cases to verify proper initialization of dynamic models.

Transient stability analysis indicates that Group 8 will successfully ride-through each N-1 fault contingency specified by SPP and the nearby areas will retain angular, frequency and voltage stability. Group 8 can successfully interconnect into the transmission system at the desired location without reduction in output power. As listed in Table 6.6, there are some numerical issues in contingencies 5, 11, 13, 15, 17, 19, 31, 33, 35, and 37 in summer-peak mode. Numerical problem caused by the Siemens user model in Gen- 2009-025 project was identified as an origination of the problem. This issue was discussed with SPP and the study was performed for aforementioned contingencies by using a generic generator model (i.e., GENCLS).

Table 6.6: Summary of Transient Stability Results

Cont. No.	Cont. Name	Summer Peak 2010/2011	Winter Peak 2010/2011
1	FLT01-3PH	STABLE	STABLE
2	FLT02-1PH	STABLE	STABLE
3	FLT03-3PH	STABLE	STABLE
4	FLT04-1PH	STABLE	STABLE
5	FLT05-3PH	Not Converged (Generic generator model used instead)	STABLE
6	FLT06-1PH	STABLE	STABLE
7	FLT07-3PH	STABLE	STABLE
8	FLT08-1PH	STABLE	STABLE
9	FLT09-3PH	STABLE	STABLE
10	FLT10-3PH	STABLE	STABLE
11	FLT11-1PH	Not Converged (Generic generator model used instead)	STABLE
12	FLT12-3PH	STABLE	STABLE
13	FLT13-1PH	Not Converged (Generic generator model used instead)	STABLE
14	FLT14-3PH	STABLE	STABLE
15	FLT15-1PH	Not Converged (Generic generator model used instead)	STABLE

Cont. No.	Cont. Name	Summer Peak 2010/2011	Winter Peak 2010/2011
16	FLT16-3PH	STABLE	STABLE
17	FLT17-3PH	Not Converged (Generic generator model used instead)	STABLE
18	FLT18-1PH	STABLE	STABLE
19	FLT19-3PH	Not Converged (Generic generator model used instead)	STABLE
20	FLT20-1PH	STABLE	STABLE
21	FLT21-3PH	STABLE	STABLE
22	FLT22-1PH	STABLE	STABLE
23	FLT23-3PH	STABLE	STABLE
24	FLT24-1PH	STABLE	STABLE
25	FLT25-3PH	STABLE	STABLE
26	FLT26-1PH	STABLE	STABLE
27	FLT27-3PH	STABLE	STABLE
28	FLT28-1PH	STABLE	STABLE
29	FLT29-3PH	STABLE	STABLE
30	FLT30-1PH	STABLE	STABLE
31	FLT31-3PH	Not Converged (Generic generator model used instead)	STABLE
32	FLT32-1PH	STABLE	STABLE
33	FLT33-3PH	Not Converged (Generic generator model used instead)	STABLE
34	FLT34-1PH	STABLE	STABLE
35	FLT35-3PH	Not Converged (Generic generator model used instead)	STABLE
36	FLT36-1PH	STABLE	STABLE
37	FLT37-3PH	Not Converged (Generic generator model used instead)	STABLE
38	FLT38-1PH	STABLE	STABLE
39	FLT39-3PH	STABLE	STABLE
40	FLT40-3PH	STABLE	STABLE
41	FLT41-1PH	STABLE	STABLE
42	FLT42-3PH	STABLE	STABLE
43	FLT43-1PH	STABLE	STABLE
44	FLT44-3PH	STABLE	STABLE
45	FLT45-3PH	STABLE	STABLE

7. CONCLUSIONS AND RECOMMENDATIONS

Group 8 and prior-queued projects in the Westar Energy, Inc. (WERE) area were studied at 100% output power using 2010/2011 summer and winter peak loading cases provided by SPP.

The results of power factor analysis indicated that GEN-2011-057 is required to maintain power factor of 97.1% to 98.7% leading at the POI, while GEN-2011-041 and GEN-2011-042 are required to maintain a power factor of 97.1% lagging to 95% leading at their POI.

Transient analysis results indicate that definitive Impact Study DISIS-2011-002 (Group 8) can successfully interconnect into the transmission system at 100% output power and at the desired location. Transient stability analysis indicated that Group 8 will ride-through each N-1 fault contingency specified by SPP and the nearby areas will retain angular, frequency and voltage stability. Numerical problem caused by the prior queued generator user model in Gen-2009-025 project was identified as a cause in some non-convergence issues in the simulations. This issue was discussed with SPP and the study was performed for aforementioned contingencies by using a generic generator model (i.e., GENCLS).

Q: Stability Study for Group 9

See next page.

Pterra Consulting

Technical Report R101-12

Definitive Impact Study for Generation Interconnection Request GEN-2011-002 Group 9 –Final Report

Submitted to

Southwest Power Pool

January 25, 2012

This page intentionally left blank

Contents

Section 1. Introduction 2

1.1. Project Overview 2
1.2. Objectives 4

Section 2. Power Factor Analysis 5

2.1. Methodology 5
2.2. Analysis 5
2.3. Conclusions 10

Section 3. Stability Analysis 11

3.1. Assumptions 11
3.2. Faults Simulated 11
3.3. Simulation Results 15

Section 4. Conclusions 16

This page intentionally left blank

Executive Summary

This report presents the results of impact study comprising of power factor and stability analyses of the proposed interconnection projects under DISIS-2011-002 Group 9 (the "Project") as described in the following table:

Request	Size (MW)	Wind Turbine Model	Point of Interconnection
GEN-2010-044	99	Siemens 3.0MW	Harbine 115kV (640208)
GEN-2011-055	52.8	GEWTGX 1.6MW	South Sterling 69kV (S969, 647969)
GEN-2011-056	65.7	GENSAL	Jeffrey 115kV (640238)

The analysis was conducted through the Southwest Power Pool ("SPP") Tariff. Two base cases, 2012 summer peak and 2012 winter peak conditions, each comprising of a power flow and corresponding dynamics database were provided by SPP.

Power Factor Test

GEN-2010-044

The power factor requirement for GEN-2010-044 is 96.3% lagging (absorbing VARs).

GEN-2011-055

The power factor requirement for GEN-2011-055 is 89.1% lagging (absorbing VARs).

Stability Simulations

Forty-five faults were considered for the transient stability simulations which are three-phase faults at the locations defined by SPP. The results of the simulation showed neither angular nor voltage instability problems in the SPP system for the forty-five faults. The study finds that the interconnection of the proposed projects does not impact the stability performance of the SPP system for the faults tested on the supplied base cases.

Section 1. Introduction

1.1. Project Overview

This report presents the results of impact study comprising of power factor and stability analyses of the proposed interconnection projects under DISIS-2011-002 Group 9 (the "Project") as described in Table 1-1:

Table 1-1 Projects Included Under DISIS-2011-002 (Group 9)

Request	Size (MW)	Wind Turbine Model	Point of Interconnection
GEN-2010-044	99	Siemens 3.0MW	Harbine 115kV (640208)
GEN-2011-055	52.8	GEWTGX 1.6MW	South Sterling 69kV (S969, 647969)
GEN-2011-056	65.7	GENSAL	Jeffrey 115kV (640238)

Figures 1-1, 1-2 and 1-3 show the interconnection diagrams of the Project to SPP's system as modeled in the power flow cases.

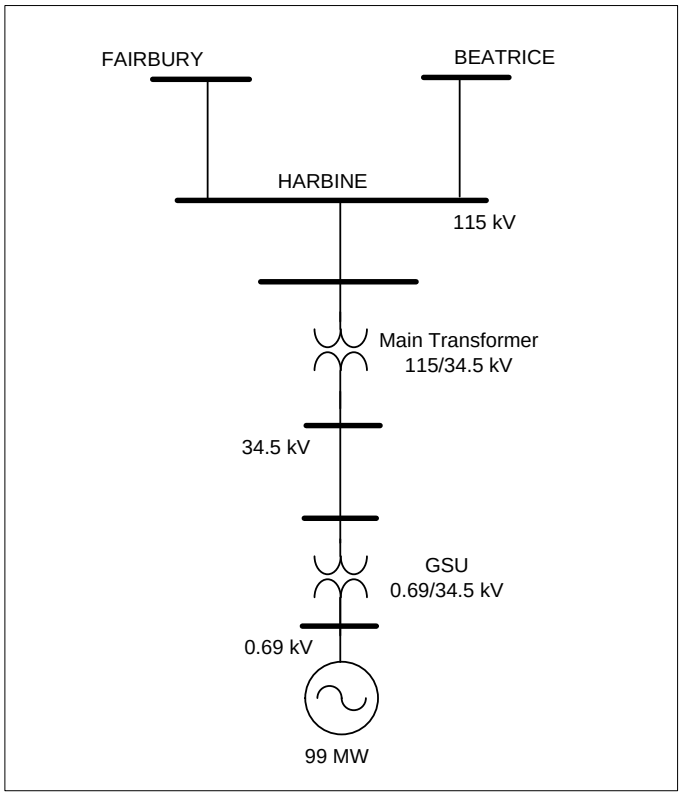

Figure 1-1 Power Flow Model for GEN-2010-044

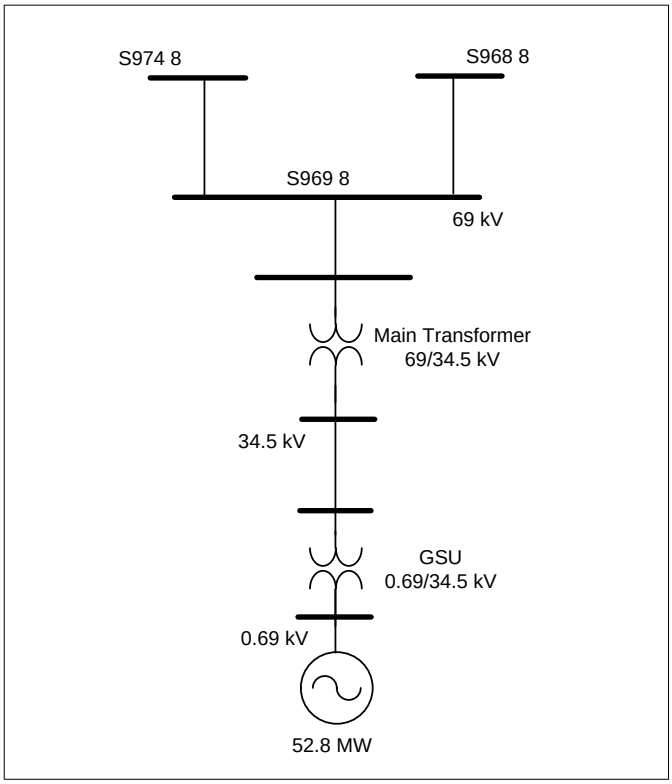

Figure 1-2 Power Flow Model for GEN-2011-055

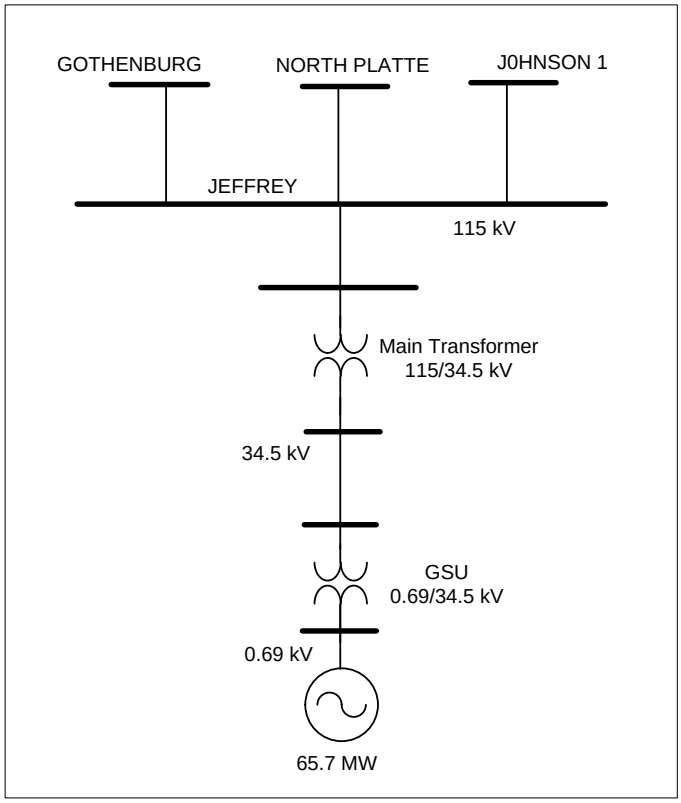

Figure 1-3 Power Flow Model for GEN-2011-056

Table 1-2 shows the list of prior queued projects modeled in the base case.

Table 1-2 List of Prior Queued Projects

Request	Size (MW)	Wind Turbine Model	Point of Interconnection
GEN-2003-021N	75	CIMTR	Tap on the Ainsworth – Calamus 115kV line (640050)
GEN-2004-005N	30	GE 1.5MW	St Francis 115kV (640351)
GEN-2006-020N	42	Vestas 3.0MW	Bloomfield 115kV (640084)
GEN-2006-038N019	80	CIMTR1	Petersburg 115kV (640318)
GEN-2006-037N1	75	GE 1.5MW	Broken Bow 115kV (640089)
GEN-2006-038N005	80	CIMTR1	Broken Bow 115kV (640089)
GEN-2006-044N	40.5	GE 1.5MW	Petersburg 115kV (640318)
GEN-2006-044N02	100.5	GE 1.5MW	Tap on the Columbus – Ft Randall 230kV line (570886)
GEN-2007-011N08	81	Vestas 3.0MW	Bloomfield 115kV (640084)
GEN-2007-015	135	GE 1.5MW	Tap Kelly – S1399 161kV (07-015T, 579244)
GEN-2008-086N02	198	GE 1.5MW	Tap on the Columbus – Ft Randall 230kV line (570886)
GEN-2008-119O	60	GE 1.5MW	S1399 161kV (646399)
GEN-2008-123N	89.7	SMK203	Tap on the Pauline – Guide Rock 115kV (G08-123N-POI, 572050)
GEN-2010-041	10.5	GE 1.5MW	S1399 161kV (646399)
GEN-2010-051	200	GE 1.6MW	Tap on the Twin Church – Hoskins 230kV line (580010)
GEN-2011-018	73.6	Siemens 2.3MW	Steele County 115kV (640426)
GEN-2011-027	120	Nordex N100 2.5MW	Tap on the GEN-2010-051 - Hoskins 230kV line (580010)

1.2. Objectives

The objectives of the study are to conduct power factor analysis and to determine the impact on system stability of interconnecting the proposed wind farms to SPP's transmission system.

Section 2. Power Factor Analysis

2.1. Methodology

Power factor analysis was conducted for the Project using a methodology which is summarized as follows:

1. Turn off the Project wind farm as modeled (as well as prior queued projects at the same point of interconnection). Replace the wind farms by a generator at the high side bus with the MW of the wind farms and no VAR capability.

2. Model a VAR generator at the wind farm's substation high voltage bus. The VAR generator is set to hold a voltage schedule at the POI consistent with the voltage schedule in the provided power flow cases for summer and winter or 1.0 p.u. voltage, whichever is higher.

3. Conduct steady state contingency analysis to determine the power factor necessary at the POI for each contingency.

4. If the required power factor at the POI is beyond the capability of the studied wind turbines, capacitor banks may be considered for the stability analysis. The preference is to locate the capacitance banks on the 34.5 kV customer side. Factors to sizing capacitor banks include:

    4.1. The ability of the wind farm to meet FERC Order 661A (low voltage ride through) with and without capacitor banks.
    4.2. The ability of the wind farm to meet FERC Order 661A (wind farm recovery to pre-fault voltage).
    4.3. If wind farms trips on high voltage, power factor lower than unity may be required.

2.2. Analysis

The Project was turned off and replaced by a generator at the high voltage bus equivalent to the capacity of the plant and with no VAR capability. A VAR generator was also modeled at the same bus and was set to hold a voltage at the POI consistent with the voltage schedule in the updated power flow cases or 1.0 p.u., whichever is higher. Table 2-1 shows the pre-contingency voltages at the POI's in the provided power flow models.

Table 2-1 Pre-contingency Voltages at POI

Request	Point of Interconnection	Size (MW)	Base Case Voltage (p.u.)	
			Summer Peak	Winter Peak
GEN-2010-044	Harbine 115kV (640208)	99	1.034	1.04
GEN-2011-055	South Sterling 69kV (S969, 647969)	52.8	1.027	1.03
GEN-2011-056	Jeffrey 115kV (640238)	65.7	1.044	1.048

GEN-2010-044

The VAR generator absorbs reactive power in all contingencies as summarized in Table 2-2.

1. For the summer case, the VAR generator absorbs reactive power in all contingencies with highest at 27.6 MVAR for the loss of Steele City-Knob Hill 115 kV line.
2. For the winter case, the VAR generator absorbs reactive power in all contingencies with highest at 25.2 MVAR for the loss of Steele City-Knob Hill 115 kV line.
3. The power factor requirement for GEN-2010-044 is 96.3% lagging (absorbing VARs).

Table 2-2 VAR Generator Output in Summer and Winter Peak Cases for GEN-2010-044

CASE	CONTINGENCY	POWER FACTOR		MW @ POI	VARGEN MVAR
SP	BASE CASE	0.977	Lag	99.0	-21.6
	HARBINE - BEATRICE 115 KV LINE	0.989	Lag	99.0	-14.8
	HARBINE - FAIRBURY 115 KV LINE	0.965	Lag	99.0	-27.0
	HARBINE - STEELE CITY 115 KV LINE	0.988	Lag	99.0	-15.6
	FAIRBURY - NORTH HEBRON 115 KV LINE	0.980	Lag	99.0	-19.9
	NORTH HEBRON - CARLTON JUNCTION 115 KV LINE	0.979	Lag	99.0	-20.8
	NORTH HEBRON - HEBRON 115 KV LINE	0.974	Lag	99.0	-22.9
	STEELE CITY - KNOB HILL 115 KV LINE	0.963	Lag	99.0	-27.6
	KNOB HILL - GREEN LEAF 115 KV LINE	0.975	Lag	99.0	-22.5
	BEATRICE - BEATRICE POWER STATION 115 KV LINE CKT 2	0.979	Lag	99.0	-20.7
	BEATRICE POWER STATION - CLATONIA 115 KV LINE CKT 2	0.981	Lag	99.0	-19.4
	BEATRICE POWER STATION - SHELDON 115 KV LINE CKT 2	0.983	Lag	99.0	-18.5
	JEFFREY - NORTH PLATTE 115 KV LINE	0.977	Lag	99.0	-21.5
	JEFFREY - GOTHENBURG 115 KV LINE	0.977	Lag	99.0	-21.4
	JEFFREY - JOHNSON1 115 KV LINE	0.977	Lag	99.0	-21.5
	GOTHENBURG - COZAD 115 KV LINE	0.977	Lag	99.0	-21.6
	WESTMINSTER - JOHNSON2 115 KV LINE	0.977	Lag	99.0	-21.6
	JOHNSON2 - CANADY 115 KV LINE CKT 1	0.977	Lag	99.0	-21.6
	JOHNSON2 - GOSPER 115 KV LINE	0.977	Lag	99.0	-21.6
	JOHNSON2 - JOHNSON LAKE 115 KV LINE	0.977	Lag	99.0	-21.5
	JOHNSON LAKE - JOHNSON1 115 KV LINE	0.977	Lag	99.0	-21.5
	NORTH PLATTE - CROOKED CREEK 230 KV LINE	0.978	Lag	99.0	-21.0
	NORTH PLATTE - GENTLEMAN 230 KV LINE CKT 1	0.977	Lag	99.0	-21.5
	NORTH PLATTE - MALONEY 115 KV LINE	0.977	Lag	99.0	-21.5
	NORTH PLATTE - MAXWELL 115 KV LINE	0.977	Lag	99.0	-21.5
	NORTH PLATTE - STOCKVILLE 115 KV LINE	0.977	Lag	99.0	-21.5
	S969 - S968 69 KV LINE	0.978	Lag	99.0	-21.3
	S969 - S974 69 KV LINE	0.976	Lag	99.0	-22.1
	HYDROCARBON - S970 69 KV LINE	0.975	Lag	99.0	-22.5
	S971 - KINDER MORGAN TAP 69 KV LINE	0.977	Lag	99.0	-21.8
	S1263 - S1258 161 KV LINE	0.978	Lag	99.0	-21.4
	S1263 - S1280 161 KV LINE	0.976	Lag	99.0	-22.1
	S963 - AUBURN 69 KV LINE	0.977	Lag	99.0	-21.4

CASE	CONTINGENCY	POWER FACTOR		MW @ POI	VARGEN MVAR
	S963 - S973 69 KV LINE	0.977	Lag	99.0	-21.6
	S963 - S977 69 KV LINE	0.977	Lag	99.0	-21.8
	MOORE - COOPER 345 KV LINE	0.981	Lag	99.0	-19.5
	MOORE - MCCOOL 345 KV LINE	0.982	Lag	99.0	-18.8
	MOORE - PAULINE 345 KV LINE	0.985	Lag	99.0	-17.5
	MOORE - NW68HOLDRG 345 KV LINE	0.978	Lag	99.0	-21.0
	MOORE - 103&ROKEBY 345 KV LINE	0.979	Lag	99.0	-20.4
	S974 69 KV - STERLING 115 KV TRANSFORMER	0.972	Lag	99.0	-24.0
	WESTBROCK 69 KV - S1263 161 KV TRANSFORMER	0.978	Lag	99.0	-21.1
	NORTH PLATTE 115/230 KV CKT 1 TRANSFORMER	0.977	Lag	99.0	-21.5
	REDWILLOW 115/345 KV TRANSFORMER	0.977	Lag	99.0	-21.7
	AXTELL 115/345 KV TRANSFORMER	0.977	Lag	99.0	-21.4
	PAULINE 115/345 KV TRANSFORMER	0.977	Lag	99.0	-21.7
WP	BASE CASE	0.976	Lag	99.0	-21.9
	HARBINE - BEATRICE 115 KV LINE	0.984	Lag	99.0	-18.1
	HARBINE - FAIRBURY 115 KV LINE	0.970	Lag	99.0	-25.0
	HARBINE - STEELE CITY 115 KV LINE	0.989	Lag	99.0	-14.7
	FAIRBURY - NORTH HEBRON 115 KV LINE	0.976	Lag	99.0	-22.0
	NORTH HEBRON - CARLTON JUNCTION 115 KV LINE	0.979	Lag	99.0	-20.5
	NORTH HEBRON - HEBRON 115 KV LINE	0.970	Lag	99.0	-25.0
	STEELE CITY - KNOB HILL 115 KV LINE	0.969	Lag	99.0	-25.2
	KNOB HILL - GREEN LEAF 115 KV LINE	0.970	Lag	99.0	-24.7
	BEATRICE - BEATRICE POWER STATION 115 KV LINE CKT 2	0.978	Lag	99.0	-21.2
	BEATRICE POWER STATION - CLATONIA 115 KV LINE CKT 2	0.980	Lag	99.0	-20.0
	BEATRICE POWER STATION - SHELDON 115 KV LINE CKT 2	0.980	Lag	99.0	-20.2
	JEFFREY - NORTH PLATTE 115 KV LINE	0.976	Lag	99.0	-21.9
	JEFFREY - GOTHENBURG 115 KV LINE	0.977	Lag	99.0	-21.8
	JEFFREY - JOHNSON1 115 KV LINE	0.976	Lag	99.0	-21.9
	GOTHENBURG - COZAD 115 KV LINE	0.976	Lag	99.0	-21.9
	WESTMINSTER - JOHNSON2 115 KV LINE	0.976	Lag	99.0	-22.0
	JOHNSON2 - CANADY 115 KV LINE CKT 1	0.976	Lag	99.0	-21.9
	JOHNSON2 - GOSPER 115 KV LINE	0.976	Lag	99.0	-22.0
	JOHNSON2 - JOHNSON LAKE 115 KV LINE	0.976	Lag	99.0	-22.0
	JOHNSON LAKE - JOHNSON1 115 KV LINE	0.977	Lag	99.0	-21.8
	NORTH PLATTE - CROOKED CREEK 230 KV LINE	0.977	Lag	99.0	-21.5
	NORTH PLATTE - GENTLEMAN 230 KV LINE CKT 1	0.976	Lag	99.0	-21.9
	NORTH PLATTE - MALONEY 115 KV LINE	0.976	Lag	99.0	-21.9
	NORTH PLATTE - MAXWELL 115 KV LINE	0.977	Lag	99.0	-21.8
	NORTH PLATTE - STOCKVILLE 115 KV LINE	0.976	Lag	99.0	-21.9
	S969 - S968 69 KV LINE	0.977	Lag	99.0	-21.8
	S969 - S974 69 KV LINE	0.976	Lag	99.0	-22.2
	HYDROCARBON - S970 69 KV LINE	0.975	Lag	99.0	-22.5
	S971 - KINDER MORGAN TAP 69 KV LINE	0.976	Lag	99.0	-22.0
	S1263 - S1258 161 KV LINE	0.977	Lag	99.0	-21.8
	S1263 - S1280 161 KV LINE	0.976	Lag	99.0	-22.3
	S963 - AUBURN 69 KV LINE	0.976	Lag	99.0	-21.9
	S963 - S973 69 KV LINE	0.976	Lag	99.0	-21.9
	S963 - S977 69 KV LINE	0.976	Lag	99.0	-22.1
	MOORE - COOPER 345 KV LINE	0.981	Lag	99.0	-19.4

CASE	CONTINGENCY	POWER FACTOR		MW @ POI	VARGEN MVAR
	MOORE - MCCOOL 345 KV LINE	0.983	Lag	99.0	-18.5
	MOORE - PAULINE 345 KV LINE	0.987	Lag	99.0	-16.0
	MOORE - NW68HOLDRG 345 KV LINE	0.978	Lag	99.0	-21.3
	MOORE - 103&ROKEBY 345 KV LINE	0.979	Lag	99.0	-20.7
	S974 69 KV - STERLING 115 KV TRANSFORMER	0.972	Lag	99.0	-23.8
	WESTBROCK 69 KV - S1263 161 KV TRANSFORMER	0.977	Lag	99.0	-21.5
	NORTH PLATTE 115/230 KV CKT 1 TRANSFORMER	0.976	Lag	99.0	-21.9
	REDWILLOW 115/345 KV TRANSFORMER	0.976	Lag	99.0	-22.1
	AXTELL 115/345 KV TRANSFORMER	0.974	Lag	99.0	-23.1
	PAULINE 115/345 KV TRANSFORMER	0.977	Lag	99.0	-21.7

GEN-2011-055

The VAR generator absorbs reactive power in all contingencies as summarized in Table 2-3.

1. For the summer case, the VAR generator absorbs reactive power in all contingencies with highest at 27.0 MVAR for the loss of Hydrocarbon-S970 69 kV line.
2. For the winter case, the VAR generator absorbs reactive power in all contingencies with highest at 26.0 MVAR for the loss of Hydrocarbon-S970 69 kV line.
3. The power factor requirement for GEN-2011-055 is 89.1% lagging (absorbing VARs).

Table 2-3 VAR Generator Output in Summer and Winter Peak Cases for GEN-2011-055

CASE	CONTINGENCY	POWER FACTOR		MW @ POI	VARGEN MVAR
SP	BASE CASE	0.905	Lag	52.8	-24.8
	HARBINE - BEATRICE 115 KV LINE	0.903	Lag	52.8	-25.1
	HARBINE - FAIRBURY 115 KV LINE	0.907	Lag	52.8	-24.5
	HARBINE - STEELE CITY 115 KV LINE	0.906	Lag	52.8	-24.7
	FAIRBURY - NORTH HEBRON 115 KV LINE	0.906	Lag	52.8	-24.7
	NORTH HEBRON - CARLTON JUNCTION 115 KV LINE	0.905	Lag	52.8	-24.8
	NORTH HEBRON - HEBRON 115 KV LINE	0.904	Lag	52.8	-24.9
	STEELE CITY - KNOB HILL 115 KV LINE	0.907	Lag	52.8	-24.5
	KNOB HILL - GREEN LEAF 115 KV LINE	0.904	Lag	52.8	-24.9
	BEATRICE - BEATRICE POWER STATION 115 KV LINE CKT 2	0.905	Lag	52.8	-24.8
	BEATRICE POWER STATION - CLATONIA 115 KV LINE CKT 2	0.905	Lag	52.8	-24.8
	BEATRICE POWER STATION - SHELDON 115 KV LINE CKT 2	0.905	Lag	52.8	-24.8
	JEFFREY - NORTH PLATTE 115 KV LINE	0.905	Lag	52.8	-24.8
	JEFFREY - GOTHENBURG 115 KV LINE	0.905	Lag	52.8	-24.8
	JEFFREY - JOHNSON1 115 KV LINE	0.905	Lag	52.8	-24.8
	GOTHENBURG - COZAD 115 KV LINE	0.905	Lag	52.8	-24.8
	WESTMINSTER - JOHNSON2 115 KV LINE	0.905	Lag	52.8	-24.9
	JOHNSON2 - CANADY 115 KV LINE CKT 1	0.905	Lag	52.8	-24.8
	JOHNSON2 - GOSPER 115 KV LINE	0.905	Lag	52.8	-24.8
	JOHNSON2 - JOHNSON LAKE 115 KV LINE	0.905	Lag	52.8	-24.8
	JOHNSON LAKE - JOHNSON1 115 KV LINE	0.905	Lag	52.8	-24.8

CASE	CONTINGENCY	POWER FACTOR		MW @ POI	VARGEN MVAR
	NORTH PLATTE - CROOKED CREEK 230 KV LINE	0.906	Lag	52.8	-24.7
	NORTH PLATTE - GENTLEMAN 230 KV LINE CKT 1	0.905	Lag	52.8	-24.8
	NORTH PLATTE - MALONEY 115 KV LINE	0.905	Lag	52.8	-24.8
	NORTH PLATTE - MAXWELL 115 KV LINE	0.905	Lag	52.8	-24.8
	NORTH PLATTE - STOCKVILLE 115 KV LINE	0.905	Lag	52.8	-24.8
	S969 - S968 69 KV LINE	0.933	Lag	52.8	-20.3
	S969 - S974 69 KV LINE	0.980	Lag	52.8	-10.7
	HYDROCARBON - S970 69 KV LINE	0.891	Lag	52.8	-27.0
	S971 - KINDER MORGAN TAP 69 KV LINE	0.893	Lag	52.8	-26.6
	S1263 - S1258 161 KV LINE	0.907	Lag	52.8	-24.5
	S1263 - S1280 161 KV LINE	0.941	Lag	52.8	-18.9
	S963 - AUBURN 69 KV LINE	0.901	Lag	52.8	-25.4
	S963 - S973 69 KV LINE	0.905	Lag	52.8	-24.9
	S963 - S977 69 KV LINE	0.924	Lag	52.8	-21.9
	MOORE - COOPER 345 KV LINE	0.908	Lag	52.8	-24.4
	MOORE - MCCOOL 345 KV LINE	0.908	Lag	52.8	-24.3
	MOORE - PAULINE 345 KV LINE	0.909	Lag	52.8	-24.2
	MOORE - NW68HOLDRG 345 KV LINE	0.907	Lag	52.8	-24.6
	MOORE - 103&ROKEBY 345 KV LINE	0.908	Lag	52.8	-24.4
	S974 69 KV - STERLING 115 KV TRANSFORMER	0.998	Lag	52.8	-3.7
	WESTBROCK 69 KV - S1263 161 KV TRANSFORMER	0.979	Lag	52.8	-11.0
	NORTH PLATTE 115/230 KV CKT 1 TRANSFORMER	0.905	Lag	52.8	-24.8
	REDWILLOW 115/345 KV TRANSFORMER	0.905	Lag	52.8	-24.9
	AXTELL 115/345 KV TRANSFORMER	0.905	Lag	52.8	-24.8
	PAULINE 115/345 KV TRANSFORMER	0.905	Lag	52.8	-24.9
WP	BASE CASE	0.907	Lag	52.8	-24.5
	HARBINE - BEATRICE 115 KV LINE	0.906	Lag	52.8	-24.6
	HARBINE - FAIRBURY 115 KV LINE	0.909	Lag	52.8	-24.2
	HARBINE - STEELE CITY 115 KV LINE	0.908	Lag	52.8	-24.4
	FAIRBURY - NORTH HEBRON 115 KV LINE	0.908	Lag	52.8	-24.4
	NORTH HEBRON - CARLTON JUNCTION 115 KV LINE	0.908	Lag	52.8	-24.4
	NORTH HEBRON - HEBRON 115 KV LINE	0.906	Lag	52.8	-24.7
	STEELE CITY - KNOB HILL 115 KV LINE	0.909	Lag	52.8	-24.2
	KNOB HILL - GREEN LEAF 115 KV LINE	0.907	Lag	52.8	-24.6
	BEATRICE - BEATRICE POWER STATION 115 KV LINE CKT 2	0.907	Lag	52.8	-24.5
	BEATRICE POWER STATION - CLATONIA 115 KV LINE CKT 2	0.907	Lag	52.8	-24.5
	BEATRICE POWER STATION - SHELDON 115 KV LINE CKT 2	0.907	Lag	52.8	-24.5
	JEFFREY - NORTH PLATTE 115 KV LINE	0.907	Lag	52.8	-24.5
	JEFFREY - GOTHENBURG 115 KV LINE	0.907	Lag	52.8	-24.5
	JEFFREY - JOHNSON1 115 KV LINE	0.907	Lag	52.8	-24.5
	GOTHENBURG - COZAD 115 KV LINE	0.907	Lag	52.8	-24.5
	WESTMINSTER - JOHNSON2 115 KV LINE	0.907	Lag	52.8	-24.5
	JOHNSON2 - CANADY 115 KV LINE CKT 1	0.907	Lag	52.8	-24.5
	JOHNSON2 - GOSPER 115 KV LINE	0.907	Lag	52.8	-24.5
	JOHNSON2 - JOHNSON LAKE 115 KV LINE	0.907	Lag	52.8	-24.5
	JOHNSON LAKE - JOHNSON1 115 KV LINE	0.907	Lag	52.8	-24.5
	NORTH PLATTE - CROOKED CREEK 230 KV LINE	0.908	Lag	52.8	-24.4
	NORTH PLATTE - GENTLEMAN 230 KV LINE CKT 1	0.907	Lag	52.8	-24.5
	NORTH PLATTE - MALONEY 115 KV LINE	0.907	Lag	52.8	-24.5

CASE	CONTINGENCY	POWER FACTOR		MW @ POI	VARGEN MVAR
	NORTH PLATTE - MAXWELL 115 KV LINE	0.907	Lag	52.8	-24.5
	NORTH PLATTE - STOCKVILLE 115 KV LINE	0.907	Lag	52.8	-24.5
	S969 - S968 69 KV LINE	0.943	Lag	52.8	-18.6
	S969 - S974 69 KV LINE	0.975	Lag	52.8	-12.1
	HYDROCARBON - S970 69 KV LINE	0.897	Lag	52.8	-26.0
	S971 - KINDER MORGAN TAP 69 KV LINE	0.899	Lag	52.8	-25.7
	S1263 - S1258 161 KV LINE	0.907	Lag	52.8	-24.5
	S1263 - S1280 161 KV LINE	0.942	Lag	52.8	-18.8
	S963 - AUBURN 69 KV LINE	0.907	Lag	52.8	-24.6
	S963 - S973 69 KV LINE	0.907	Lag	52.8	-24.6
	S963 - S977 69 KV LINE	0.924	Lag	52.8	-21.8
	MOORE - COOPER 345 KV LINE	0.910	Lag	52.8	-24.0
	MOORE - MCCOOL 345 KV LINE	0.912	Lag	52.8	-23.7
	MOORE - PAULINE 345 KV LINE	0.912	Lag	52.8	-23.7
	MOORE - NW68HOLDRG 345 KV LINE	0.909	Lag	52.8	-24.1
	MOORE - 103&ROKEBY 345 KV LINE	0.911	Lag	52.8	-24.0
	S974 69 KV - STERLING 115 KV TRANSFORMER	0.992	Lag	52.8	-6.7
	WESTBROCK 69 KV - S1263 161 KV TRANSFORMER	0.973	Lag	52.8	-12.6
	NORTH PLATTE 115/230 KV CKT 1 TRANSFORMER	0.907	Lag	52.8	-24.5
	REDWILLOW 115/345 KV TRANSFORMER	0.907	Lag	52.8	-24.5
	AXTELL 115/345 KV TRANSFORMER	0.905	Lag	52.8	-24.8
	PAULINE 115/345 KV TRANSFORMER	0.907	Lag	52.8	-24.5

2.3. Conclusions

1. GEN-2010-044

   The power factor requirement for GEN-2010-044 is 96.3% lagging (absorbing VARs).

2. GEN-2011-055

   The power factor requirement for GEN-2011-055 is 89.1% lagging (absorbing VARs).

Section 3. Stability Analysis

3.1. Assumptions

The following assumptions were adopted for the dynamic simulations:

1. Constant maximum and uniform wind speed for the entire period of study.
2. Wind turbine control models with their default values.
3. Under/over voltage/frequency protection use manufacturer settings.

3.2. Faults Simulated

Forty-five faults were considered for the transient stability simulations which are three phase faults at the locations defined by SPP. The prior-queued projects in Table 1-2 and units in Areas 531, 534, 536, 540, 541, 640, 645, 650 and 652 were monitored in the simulations.

Table 3-1 shows the list of simulated contingencies. It also shows the fault clearing time for all the study contingencies.

Table 3-1 List of Simulated Faults

Cont. No.	Cont. Name	Description
1	FLT01-3PH	3 phase fault on the Harbine (640208) to Beatrice (640076) 115kV near Harbine. a. Apply fault at Harbine 115kV bus. b. Clear fault after 6.5 cycles by tripping faulted line.
2	FLT02-3PH	3 phase fault on the Harbine (640208) to Fairbury (640169) 115kV near Harbine. a. Apply fault at Harbine 115kV bus. b. Clear fault after 6.5 cycles by tripping faulted line.
3	FLT03-3PH	3 phase fault on the Harbine (640208) to Steele City (640426) 115kV near Harbine. a. Apply fault at Harbine 115kV bus. b. Clear fault after 6.5 cycles by tripping faulted line.
4	FLT04-3PH	3 phase fault on the Fairbury (640169) to North Hebron (640218) 115kV near Fairbury. a. Apply fault at Fairbury 115kV bus. b. Clear fault after 6.5 cycles by tripping faulted line.
5	FLT05-3PH	3 phase fault on the North Hebron (640218) to Carlton Junction (640105) 115kV near to North Hebron. a. Apply fault at to North Hebron 115kV bus. b. Clear fault after 6.5 cycles by tripping faulted line.
6	FLT06-3PH	3 phase fault on the North Hebron (640218) to Hebron (640220) 115kV near to North Hebron. a. Apply fault at to North Hebron 115kV bus. b. Clear fault after 6.5 cycles by tripping faulted line.
7	FLT07-3PH	3 phase fault on the Steele City (640426) to Knob Hill (533332) 115kV near to Steele City. a. Apply fault at to Steele City 115kV bus. b. Clear fault after 6.5 cycles by tripping faulted line.
8	FLT08-3PH	3 phase fault on the Knob Hill (533332) to Green Leaf (539665) 115kV near to Knob Hill. a. Apply fault at to Knob Hill 115kV bus. b. Clear fault after 6.5 cycles by tripping faulted line.
9	FLT09-3PH	3 phase fault on the Beatrice (640076) to Beatrice Power Station (640088) 115kV line, ckt2, near Beatrice. a. Apply fault at Beatrice 115kV bus. b. Clear fault after 6.5 cycles by tripping the faulted line.
10	FLT10-3PH	3 phase fault on the Beatrice Power Station (640088) to Clatonia (640111) 115kV line, ckt2, near Beatrice Power Station. a. Apply fault at Beatrice Power Station 115kV bus. b. Clear fault after 6.5 cycles by tripping the faulted line.
11	FLT11-3PH	3 phase fault on the Beatrice Power Station (640088) to Sheldon (640278) 115kV line, ckt2, near Beatrice Power Station. a. Apply fault at Beatrice Power Station 115kV bus. b. Clear fault after 6.5 cycles by tripping the faulted line.

Cont. No.	Cont. Name	Description
12	FLT12-3PH	3 phase fault on the Jeffrey (640238) to North Platte (640287) 115kV line, near Jeffrey. a. Apply fault at Jeffrey 115kV bus. b. Clear fault after 6.5 cycles by tripping the faulted line.
13	FLT13-3PH	3 phase fault on the Jeffrey (640238) to Gothenburg (640196) 115kV line, near Jeffrey. a. Apply fault at Jeffrey 115kV bus. b. Clear fault after 6.5 cycles by tripping the faulted line.
14	FLT14-3PH	3 phase fault on the Jeffrey (640238) to Johnson1 (640240) 115kV line, near Jeffrey. a. Apply fault at Jeffrey 115kV bus. b. Clear fault after 6.5 cycles by tripping the faulted line.
15	FLT15-3PH	3 phase fault on the Gothenburg (640196) to Cozad (640144) 115kV line, near Gothenburg. a. Apply fault at the Gothenburg 115kV bus. b. Clear fault after 6.5 cycles by tripping the faulted line.
16	FLT16-3PH	3 phase fault on the Westminster (640407) to Johnson2 (640242) 115kV line, near Westminster. a. Apply fault at the Westminster 115kV bus. b. Clear fault after 6.5 cycles by tripping the faulted line.
17	FLT17-3PH	3 phase fault on the Johnson2 (640242) to Canady (640103) 115kV line, ckt1, near Johnson2. a. Apply fault at the Johnson2 115kV bus. b. Clear fault after 6.5 cycles by tripping the faulted line.
18	FLT18-3PH	3 phase fault on the Johnson2 (640242) to Gosper (640026) 115kV line, near Johnson2. a. Apply fault at the Johnson2 115kV bus. b. Clear fault after 6.5 cycles by tripping the faulted line.
19	FLT19-3PH	3 phase fault on the Johnson2 (640242) to Johnson Lake (640224) 115kV line, near Johnson2. a. Apply fault at the Johnson2 115kV bus. b. Clear fault after 6.5 cycles by tripping the faulted line.
20	FLT20-3PH	3 phase fault on the Johnson Lake (640224) to Johnson1 (640240) 115kV line, near Johnson Lake. a. Apply fault at the Johnson Lake 115kV bus. b. Clear fault after 6.5 cycles by tripping the faulted line.
21	FLT21-3PH	3 phase fault on the North Platte (640286) to Crooked Creek (640093) 230kV line, near North Platte. a. Apply fault at the North Platte 230kV bus. b. Clear fault after 6.5 cycles by tripping the faulted line.
22	FLT22-3PH	3 phase fault on the North Platte (640286) to Gentleman (640184) 230kV line, ckt1, near North Platte. a. Apply fault at the North Platte 230kV bus. b. Clear fault after 6.5 cycles by tripping the faulted line.
23	FLT23-3PH	3 phase fault on the North Platte (640287) to Maloney (640265) 115kV line, near North Platte. a. Apply fault at the North Platte 115kV bus. b. Clear fault after 6.5 cycles by tripping the faulted line.

Cont. No.	Cont. Name	Description
24	FLT24-3PH	3 phase fault on the North Platte (640287) to Maxwell (640267) 115kV line, near North Platte. a. Apply fault at the North Platte 115kV bus. b. Clear fault after 6.5 cycles by tripping the faulted line.
25	FLT25-3PH	3 phase fault on the North Platte (640287) to Stockville (640365) 115kV line, near North Platte. a. Apply fault at the North Platte 115kV bus. b. Clear fault after 6.5 cycles by tripping the faulted line.
26	FLT26-3PH	3 phase fault on the S969 (647969) to S968 (647968) 69kV line, near S969. a. Apply fault at the S969 69kV bus. b. Clear fault after 6.5 cycles by tripping the faulted line.
27	FLT27-3PH	3 phase fault on the S969 (647969) to S974 (647974) 69kV line, near S969. a. Apply fault at the S969 69kV bus. b. Clear fault after 6.5 cycles by tripping the faulted line.
28	FLT28-3PH	3 phase fault on the Hydrocarbon (647102) to S970 (647970) 69kV line, near Hydrocarbon. a. Apply fault at the Hydrocarbon 69kV bus. b. Clear fault after 6.5 cycles by tripping the faulted line.
29	FLT29-3PH	3 phase fault on the S971 (647971) to Kinder Morgan Tap (647114) 69kV line, near S971. a. Apply fault at the S971 69kV bus. b. Clear fault after 6.5 cycles by tripping the faulted line.
30	FLT30-3PH	3 phase fault on the S1263 (646263) to S1258 (646258) 161kV line, near S1263. a. Apply fault at the S1263 161kV bus. b. Clear fault after 6.5 cycles by tripping the faulted line.
31	FLT31-3PH	3 phase fault on the S1263 (646263) to S1280 (646280) 161kV line, near S1263. a. Apply fault at the S1263 161kV bus. b. Clear fault after 6.5 cycles by tripping the faulted line.
32	FLT32-3PH	3 phase fault on the S963 (647963) to Auburn (647101) 69kV line, near S963. a. Apply fault at the S963 69kV bus. b. Clear fault after 6.5 cycles by tripping the faulted line.
33	FLT33-3PH	3 phase fault on the S963 (647963) to S973 (647973) 69kV line, near S963. a. Apply fault at the S963 69kV bus. b. Clear fault after 6.5 cycles by tripping the faulted line.
34	FLT34-3PH	3 phase fault on the S963 (647963) to S977 (647977) 69kV line, near S963. a. Apply fault at the S963 69kV bus. b. Clear fault after 6.5 cycles by tripping the faulted line.
35	FLT35-3PH	3 phase fault on the Moore (640277) to Cooper (640139) 345kV line, near Moore. a. Apply fault at the Moore 345kV bus. b. Clear fault after 6.5 cycles by tripping the faulted line.
36	FLT36-3PH	3 phase fault on the Moore (640277) to McCool (640271) 345kV line, near Moore. a. Apply fault at the Moore 345kV bus. b. Clear fault after 6.5 cycles by tripping the faulted line.
37	FLT37-3PH	3 phase fault on the Moore (640277) to Pauline (640312) 345kV line, near Moore. a. Apply fault at the Moore 345kV bus. b. Clear fault after 6.5 cycles by tripping the faulted line.

Cont. No.	Cont. Name	Description
38	FLT38-3PH	3 phase fault on the Moore (640277) to NW68Holdrg (650114) 345kV line, near Moore. a. Apply fault at the Moore 345kV bus. b. Clear fault after 6.5 cycles by tripping the faulted line.
39	FLT39-3PH	3 phase fault on the Moore (640277) to 103&Rokeby (650189) 345kV line, near Moore. a. Apply fault at the Moore 345kV bus. b. Clear fault after 6.5 cycles by tripping the faulted line.
40	FLT40-3PH	3 phase fault on the S974 69kV (647974) to Sterling 115kV (640362) transformer at the 115kV bus. a. Apply fault at the Sterling 115kV bus. b. Clear fault after 5.5 cycles by tripping the transformer
41	FLT41-3PH	3 phase fault on the Westbrock 69kV (647111) to S1263 161kV (646263) transformer at the 161kV bus. a. Apply fault at the S1263 161kV bus. b. Clear fault after 5.5 cycles by tripping the transformer
42	FLT42-3PH	3 phase fault on the North Platte 115kV (640287) to the North Platte 230kV (640286), ckt1, transformer at the 230kV bus. a. Apply fault at the North Platte 230kV bus. b. Clear fault after 5.5 cycles by tripping the transformer
43	FLT43-3PH	3 phase fault on the Redwillow 115kV (640326) to Redwillow 345kV (640325) transformer at the 345kV bus. a. Apply fault at the Redwillow 345kV bus. b. Clear fault after 5.5 cycles by tripping the transformer
44	FLT44-3PH	3 phase fault on the Axtell 115kV (640066) to Axtell 345kV (640065) transformer at the 345kV bus. a. Apply fault at the Axtell 345kV bus. b. Clear fault after 5.5 cycles by tripping the transformer
45	FLT45-3PH	3 phase fault on the Pauline 115kV (640313) to Pauline 345kV (640314) transformer at the 345kV bus. a. Apply fault at the Pauline 345kV bus. b. Clear fault after 5.5 cycles by tripping the transformer

The simulations were performed with a 0.1-second steady-state run followed by the appropriate disturbance as described in Table 3-1. Simulations were run for a minimum 10-second duration to confirm proper machine damping.

3.3. Simulation Results

The stability simulations with the forty-five specified test faults did not find any angular or voltage instability problems in the SPP system for the three projects. The study finds that the interconnection of the proposed projects does not impact the stability performance of the SPP system for the faults tested on the supplied base cases.

Section 4. Conclusions

The findings of the impact study for the proposed interconnection projects under DISIS-2011-002 Group 9 are as follows:

1. GEN-2010-044

   The power factor requirement for GEN-2010-044 is 96.3% lagging (absorbing VARs).

2. GEN-2011-055

   The power factor requirement for GEN-2011-055 is 89.1% lagging (absorbing VARs).

3. The stability simulations with the forty-five specified test faults did not find any angular or voltage instability problems in the SPP system for the two projects. The study finds that the interconnection of the proposed projects does not impact the stability performance of the SPP system for the faults tested on the supplied base cases.

R: Stability Study for Group 10

No requests were located in the cluster group

S: Stability Study for Group 11

No requests were located in the cluster group

T: Stability Study for Group 12

No requests were located in the cluster group

U: Stability Study for Group 13

No requests were located in the cluster group

V: Stability Study for Group 14

See next page.

Southwest Power Pool

Definitive Interconnection System Impact Study

DISIS-2011-002-Group14

SPP Generation Interconnection Studies

(DISIS-2011-002)

January 2012

Executive Summary

A transient stability study has been performed by Southwest Power Pool (SPP) to evaluate the interconnection requests in the Definitive Impact Study Interconnection Study (DISIS-2011-002) for Group 14 in the South Central Oklahoma area.

The DISIS-2011-002 study has seven (2) Interconnection Requests in the South Central Oklahoma area. The interconnection requests include GEN-2011-040 and GEN-2011-050. The interconnection requests in DISIS-2011-002 Group 14 are dispatching 396MW.

The results of a stability analysis determined that for the addition of the DISIS-2011-002 interconnection requests, the transmission system was found to remain stable for both summer and winter peak conditions. Additionally, the projects that were wind farms were found to stay connected during the contingencies that were studied, meeting the Low Voltage Ride Through (LVRT) requirements of FERC Order #661A.

The power factor analysis indicated that all DISIS-2011-002 interconnection requests will be required to maintain 95% lagging (producing vars) and 95% leading (absorbing vars) power factor at the point of interconnection.

Should any previously queued projects that were included in this study withdraw from the queue, then this System Impact Study may have to be revised to determine the impacts of this Interconnection Customer's project on transmission facilities.

1.0 Introduction

A transient stability study has been performed by Southwest Power Pool (SPP) to evaluate the interconnection requests in the Definitive Impact Study Interconnection Study (DISIS-2011-002) for Group 14 in the South Central Oklahoma area.

The DISIS-2011-002 study has two (2) Interconnection Requests in the South Central Oklahoma area. The interconnection requests include GEN-2011-040 and GEN-2011-050. The interconnection requests in DISIS-2011-002 Group 14 are dispatching 396MW.

Two seasonal base cases were used in the study to analyze the stability impacts of the proposed generation facility. A modifed 2012 summer peak case and a 2012 winter peak case which were both modified to include the prior queued projects shown in Table 2.

In this study SPP monitored the generators and transmission lines in Areas 520, 524, 525, 526, 531, 534 and 536.

2.0 Purpose

The purpose of this Definitive Impact Study Interconnection Study (DISIS), is to evaluate the impact of the proposed interconnection on the reliability of the Transmission System. Table 1 below lists the requests that were analyzed in this study.

Request	Size (MW)	Generator Model	Point of Interconnection
GEN-2011-040	198	Siemens 2.3MW	Tap on the Poolvil4 to Ratliff 138kV line (G11 040 –TAP 583004)
GEN-2011-050	198	Vestas V90 1.8MW	Tap on the Rushspt4 to Ommarlo4 138kV line (G11_050-TAP 138kV, 562081)

Table 1: DISIS-2011-002 Interconnection Request Table

Should any previously queued projects that were included in this study withdraw, listed in Table 2, then this System Impact Study may require a re-study of this request at the expense of the customer.

Request	Size (MW)	Generator Model	Point of Interconnection
GEN-2008-046	198	Vestas V90 1.8MW	Sunnyside 345kV (515136)

Table 2: DISIS-2011-002 Prior Queued Request Table

3.0 Facilities

3.1 Interconnection Facility

GEN-2011-040

The generating facility was studied with the assumption that it would be using the Siemens 2.3MW wind turbines. The nameplate rating of each turbine is 2.3MW (1600kW) with a machine base of 2556kVA. Each wind turbine has a 34.5kV/0.69kV 2600kVA transformer. The

Customer's interconnection facilities will include one (1) 138/34.5/13.8kV 72000/120000kVA transformer. The point of interconnection (POI) will be at OKGE Poolville 138 kV substation. Figure 1 below shows a POI one-line of the customer's facility.

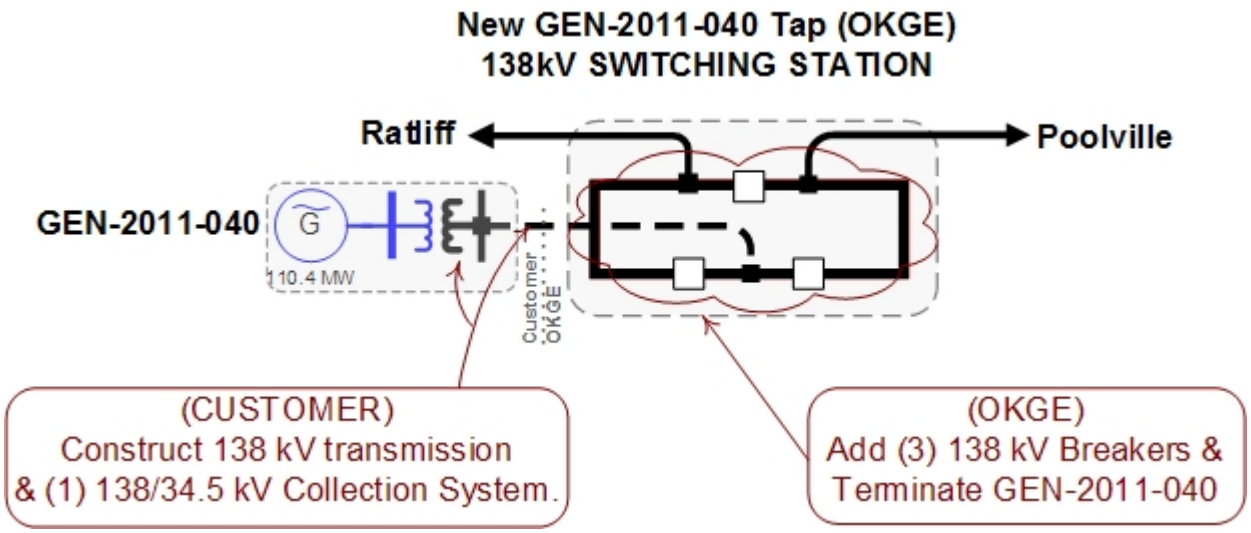

Figure 1: GEN-2011-040 POI One-line Diagram

Figure 2 shows a detailed one-line diagram of the GEN-2011-040 facility.

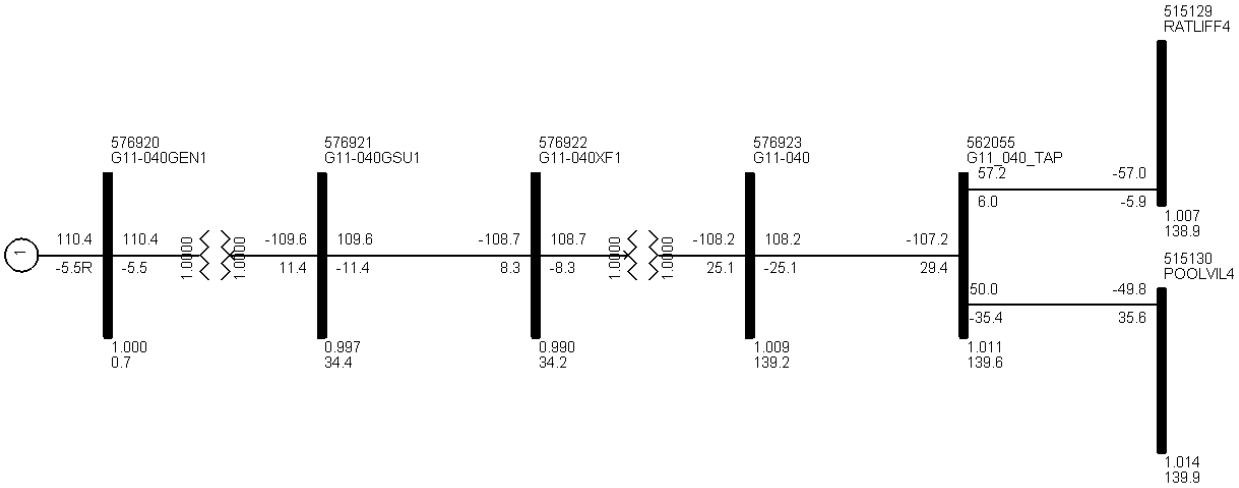

Figure 2: GEN-2011-040 Facility One-line Diagram

GEN-2011-050

The generating facility was studied with the assumption that it would be using the Vestas 1.8MW wind turbines. The nameplate rating of each turbine is 2.3MW (1600kW) with a machine base of 1800kVA. Each wind turbine has a 34.5kV/0.69kV 1850kVA transformer. The Customer's interconnection facilities will include one (1) 115/34.5kV 84000/140000kVA transformer. The point

of interconnection (POI) will be a tap at Rushspt4 – Ommarlo4 138 kV line. Figure 3 below shows a POI one-line of the customer's facility.

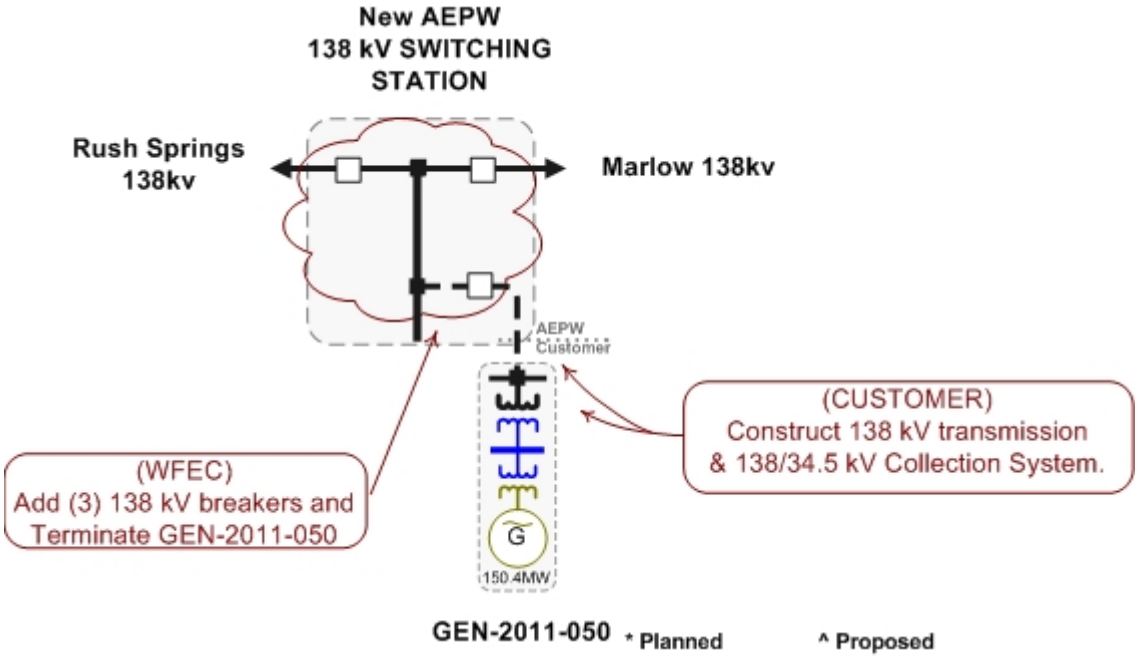

Figure 3: GEN-2011-050 POI One-line Diagram

Figure 4 shows a detailed one-line diagram of the GEN-2011-050 facility.

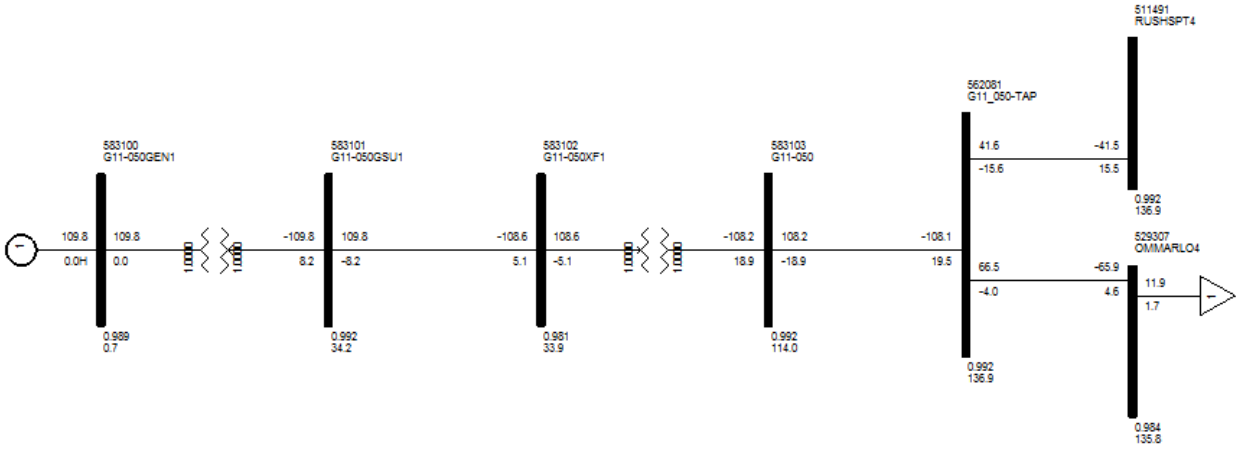

Figure 4: GEN-2011-050 Facility One-line Diagram

4.0 Stability Study Criteria

FERC Order 661A Low Voltage Ride-Through Provisions (LVRT), which went into effect January 1, 2006, requires that wind generating plants remain in-service during 3-phase faults at the point of interconnection. This order may require a Static VAr Compensator (SVC) or STATCOM device be specified at the Customer facility to keep the wind generator on-line for the fault. Dynamic

Stability studies performed as part of the System Impact Study will provide additional guidance as to whether the reactive compensation can be static or a portion must be dynamic (such as a SVC or STATCOM).

5.0 Stability Study Analysis

For group fourteen 38 (thirty eight) contingencies were considered for the transient stability simulations. These contingencies included three phase faults and single phase line faults at locations defined by SPP. Single-phase line faults were simulated by applying a fault impedance to the positive sequence network at the fault location to represent the effect of the negative and zero sequence networks on the positive sequence network. The fault impedance was computed to give a positive sequence voltage at the specified fault location of approximately 60% of pre-fault voltage. This method is in agreement with SPP current practice.
The faults that were defined and simulated are listed in Table 3 below. The faults were simulated on a summer peak and a winter peak model.

Cont. No.	Cont. Name	Description
1	FLT01-3PH	3 phase fault on the Sunnyside (515136) to Lawton Eastside (511468) 345kV line, near Sunnyside. a. Apply fault at Sunnyside 345kV bus. b. Clear fault after 5 cycles by tripping the faulted line. c. Wait 20 cycles, and then re-close the line in (b) back into the fault. d. Leave fault on for 5 cycles, then trip the line in (b) and remove fault.
2	FLT02-1PH	*Single phase fault and sequence like previous*
3	FLT03-3PH	3 phase fault on the Sunnyside (515136) to Johnston County (514809) 345kV line, near Sunnyside. a. Apply fault at Sunnyside 345kV bus. b. Clear fault after 5 cycles by tripping the faulted line. c. Wait 20 cycles, and then re-close the line in (b) back into the fault. d. Leave fault on for 5 cycles, then trip the line in (b) and remove fault.
4	FLT04-1PH	*Single phase fault and sequence like previous*
5	FLT05-3PH	3 phase fault on the Sunnyside (515136) to Hugo (521157) 345kV line, near Sunnyside. a. Apply fault at Sunnyside 345kV bus. b. Clear fault after 5 cycles by tripping the faulted line. c. Wait 20 cycles, and then re-close the line in (b) back into the fault. d. Leave fault on for 5 cycles, then trip the line in (b) and remove fault.
6	FLT06-1PH	*Single phase fault and sequence like previous*
7	FLT07-3PH	3 phase fault on the Sunnyside 345kv (515136) to138kV (515135) transformer on the 345kV bus. a. Apply fault at Sunnyside 345kV bus. b. Clear fault after 5 cycles by tripping the faulted transformer.
8	FLT08-3PH	3 phase fault on the GEN-2011-040 Tap (583004) to Pooleville (515130) 138kV line, near GEN-2011-040. a. Apply fault at GEN-2011-040 138kV bus. b. Clear fault after 5 cycles by tripping the faulted line. c. Wait 20 cycles, and then re-close the line in (b) back into the fault. d. Leave fault on for 5 cycles, then trip the line in (b) and remove fault.
9	FLT09-1PH	*Single phase fault and sequence like previous*
10	FLT10-3PH	3 phase fault on the Pooleville (515130) to Fox (515131) 138kV line, near Pooleville. a. Apply fault at Pooleville 138kV bus. b. Clear fault after 5 cycles by tripping the faulted line. c. Wait 20 cycles, and then re-close the line in (b) back into the fault. d. Leave fault on for 5 cycles, then trip the line in (b) and remove fault.
11	FLT11-1PH	*Single phase fault and sequence like previous*
12	FLT12-3PH	3 phase fault on one of the Lawton Eastside 345kV (511468) to138kV (511467) transformers on the 345kV bus. a. Apply fault at Lawton Eastside 345kV bus. b. Clear fault after 5 cycles by tripping the faulted transformer.
13	FLT13-3PH	3 phase fault on the Ratliff (515129) to Prairie Point (515134) 138kV line, near Ratliff. a. Apply fault at Ratliff 138kV bus. b. Clear fault after 5 cycles by tripping the faulted line. c. Wait 20 cycles, and then re-close the line in (b) back into the fault. d. Leave fault on for 5 cycles, then trip the line in (b) and remove fault.
14	FLT14-1PH	*Single phase fault and sequence like previous*

Cont. No.	Cont. Name	Description
15	FLT15-3PH	3 phase fault on the Fox (515131) to Dundee (515132) 138kV line, near Dundee. a. Apply fault at Dundee 138kV bus. b. Clear fault after 5 cycles by tripping the faulted line. c. Wait 20 cycles, and then re-close the line in (b) back into the fault. d. Leave fault on for 5 cycles, then trip the line in (b) and remove fault.
16	FLT16-3PH	3 phase fault on the G11_050-Tap (562081) to Rush Springs Tap (511491) 138kV line, near Rush Springs Tap. a. Apply fault at Rush Springs Tap 138kV bus. b. Clear fault after 5 cycles by tripping the faulted line. c. Wait 20 cycles, and then re-close the line in (b) back into the fault. d. Leave fault on for 5 cycles, then trip the line in (b) and remove fault.
17	FLT17-1PH	*Single phase fault and sequence like previous*
18	FLT18-3PH	3 phase fault on the G11_050-Tap (562081) to Marlow (529307) 138kV line, near Marlow. a. Apply fault at Marlow 138kV bus. b. Clear fault after 5 cycles by tripping the faulted line. c. Wait 20 cycles, and then re-close the line in (b) back into the fault. d. Leave fault on for 5 cycles, then trip the line in (b) and remove fault.
19	FLT19-1PH	*Single phase fault and sequence like previous*
20	FLT20-3PH	3 phase fault on the Duncan (511453) to Duncan Eastside (511455) 138kV line, near Duncan. a. Apply fault at Duncan 138kV bus. b. Clear fault after 5 cycles by tripping the faulted line. c. Wait 20 cycles, and then re-close the line in (b) back into the fault. d. Leave fault on for 5 cycles, then trip the line in (b) and remove fault.
21	FLT21-1PH	*Single phase fault and sequence like previous*
22	FLT22-3PH	3 phase fault on the OMDuncan (529304) to Comanche Tap (511494) 138kV line, near OMDuncan. a. Apply fault at OMDuncan 138kV bus. b. Clear fault after 5 cycles by tripping the faulted line. c. Wait 20 cycles, and then re-close the line in (b) back into the fault. d. Leave fault on for 5 cycles, then trip the line in (b) and remove fault.
23	FLT23-1PH	*Single phase fault and sequence like previous*
24	FLT24-3PH	3 phase fault on the Rush Springs Tap North (511492) to Cornville (511449) 138kV line, near Cornville. a. Apply fault at Cornville 138kV bus. b. Clear fault after 5 cycles by tripping the faulted line. c. Wait 20 cycles, and then re-close the line in (b) back into the fault. d. Leave fault on for 5 cycles, then trip the line in (b) and remove fault.
25	FLT25-1PH	*Single phase fault and sequence like previous*
26	FLT26-3PH	3 phase fault on the Cimarron 345kV (514901) to 138kV (514898)/13.8kV (515714) transformer on the 345kV bus. a. Apply fault at Cimarron 345kV bus. b. Clear fault after 5 cycles by tripping the faulted transformer.
27	FLT27-3PH	3 phase fault on the Sunnyside (515135) to Pooleville (515130) 138kV line, near Sunnyside. a. Apply fault at Sunnyside 138kV bus. b. Clear fault after 5 cycles by tripping the faulted line. c. Wait 20 cycles, and then re-close the line in (b) back into the fault. d. Leave fault on for 5 cycles, then trip the line in (b) and remove fault.
28	FLT28-1PH	*Single phase fault and sequence like previous*

Cont. No.	Cont. Name	Description
29	FLT29-3PH	3 phase fault on the Sunnyside (515135) to Uniroyal (515137) 138kV line, near Sunnyside. a. Apply fault at Sunnyside 138kV bus. b. Clear fault after 5 cycles by tripping the faulted line. c. Wait 20 cycles, and then re-close the line in (b) back into the fault. d. Leave fault on for 5 cycles, then trip the line in (b) and remove fault.
30	FLT30-1PH	*Single phase fault and sequence like previous*
31	FLT31-3PH	3 phase fault on the Sunnyside (515135) to Lone Grove (515144) 138kV line, near Sunnyside. a. Apply fault at Sunnyside 138kV bus. b. Clear fault after 5 cycles by tripping the faulted line. c. Wait 20 cycles, and then re-close the line in (b) back into the fault. d. Leave fault on for 5 cycles, then trip the line in (b) and remove fault.
32	FLT32-1PH	*Single phase fault and sequence like previous*
33	FLT33-3PH	3 phase fault on the Sunnyside (515135) to Rocky Point (515164) 138kV line, near Sunnyside. a. Apply fault at Sunnyside 138kV bus. b. Clear fault after 5 cycles by tripping the faulted line. c. Wait 20 cycles, and then re-close the line in (b) back into the fault. d. Leave fault on for 5 cycles, then trip the line in (b) and remove fault.
34	FLT34-1PH	*Single phase fault and sequence like previous*
35	FLT35-3PH	3 phase fault on the Ratliff 138kV (515129) to Ratliff 69kV (515128) transformer, on the 138kV bus. a. Apply fault at Ratliff 138kV bus. b. Clear fault after 5 cycles by tripping the faulted line. c. Wait 20 cycles, and then re-close the line in (b) back into the fault. d. Leave fault on for 5 cycles, then trip the line in (b) and remove fault.
36	FLT36-3PH	3 phase fault on the Healton Tap 138kV (515141) to Healton Tap 69kV (515140) transformer, on the 138kV bus. a. Apply fault at Healton Tap 138kV bus. b. Clear fault after 5 cycles by tripping the faulted line. c. Wait 20 cycles, and then re-close the line in (b) back into the fault. d. Leave fault on for 5 cycles, then trip the line in (b) and remove fault.
37	FLT37-3PH	3 phase fault on the Duncan 138kV (511453) to Duncan 69kV (511455) transformer, on the 138kV bus. a. Apply fault at Duncan 138kV bus. b. Clear fault after 5 cycles by tripping the faulted line. c. Wait 20 cycles, and then re-close the line in (b) back into the fault. d. Leave fault on for 5 cycles, then trip the line in (b) and remove fault.
38	FLT38-3PH	3 phase fault on the Cornville 138kV (511449) to Cornville 69kV (511450) transformer, on the 138kV bus. a. Apply fault at Cornville 138kV bus. b. Clear fault after 5 cycles by tripping the faulted line. c. Wait 20 cycles, and then re-close the line in (b) back into the fault. d. Leave fault on for 5 cycles, then trip the line in (b) and remove fault.
39	FLT39-3PH	3 phase fault on the GEN-2011-040 Tap (583004) to Ratliff (515129) 138kV line, near GEN-2011-040. a. Apply fault at GEN-2011-040 138kV bus. b. Clear fault after 5 cycles by tripping the faulted line. c. Wait 20 cycles, and then re-close the line in (b) back into the fault. d. Leave fault on for 5 cycles, then trip the line in (b) and remove fault.
40	FLT40-1PH	*Single phase fault and sequence like previous*

Table 3: Contingency List for Group 14

6.0 Simulation Results

All faults were run for both summer and winter cases, no tripping occurred in this study.

Table 4 summarizes the results for all faults. Complete sets of plots for summer and winter cases are available on request.

Based on the dynamic results, with all network upgrades in service, all the requests in Group 14 did not cause any stability problems and remained stable for all faults studied, with the addition the proposed upgrades.

Cont. Number	Cont. Name	Description	Summer	Winter
1	FLT01-3PH	3 phase fault on the Sunnyside (515136) to Lawton Eastside (511468) 345kV line, near Sunnyside.	OK	OK
2	FLT02-1PH	*Single phase fault and sequence like previous*	OK	OK
3	FLT03-3PH	3 phase fault on the Sunnyside (515136) to Johnston County (514809) 345kV line, near Sunnyside.	OK	OK
4	FLT04-1PH	*Single phase fault and sequence like previous*	OK	OK
5	FLT05-3PH	3 phase fault on the Sunnyside (515136) to Hugo (521157) 345kV line, near Sunnyside.	OK	OK
6	FLT06-1PH	*Single phase fault and sequence like previous*	OK	OK
7	FLT07-3PH	3 phase fault on the Sunnyside 345kv (515136) to138kV (515135) transformer on the 345kV bus.	OK	OK
8	FLT08-3PH	3 phase fault on the GEN-2011-040 to Pooleville (515130) 138kV line, near GEN-2011-040.	OK	OK
9	FLT09-1PH	*Single phase fault and sequence like previous*	OK	OK
10	FLT10-3PH	3 phase fault on the Pooleville (515130) to Fox (515131) 138kV line, near Pooleville.	OK	OK
11	FLT11-1PH	*Single phase fault and sequence like previous*	OK	OK
12	FLT12-3PH	3 phase fault on one of the Lawton Eastside 345kV (511468) to138kV (511467) transformers on the 345kV bus.	OK	OK
13	FLT13-3PH	3 phase fault on the Ratliff (515129) to Prairie Point (515134) 138kV line, near Ratliff.	OK	OK
14	FLT14-1PH	*Single phase fault and sequence like previous*	OK	OK
15	FLT15-3PH	3 phase fault on the Fox (515131) to Dundee (515132) 138kV line, near Dundee.	OK	OK
16	FLT16-3PH	3 phase fault on the G11_050-Tap (562081) to Rush Springs Tap (511491) 138kV line, near Rush Springs Tap.	OK	OK
17	FLT17-1PH	*Single phase fault and sequence like previous*	OK	OK
18	FLT18-3PH	3 phase fault on the G11_050-Tap (562081) to Marlow (529307) 138kV line, near Marlow.	OK	OK
19	FLT19-1PH	*Single phase fault and sequence like previous*	OK	OK
20	FLT20-3PH	3 phase fault on the Duncan (511453) to Duncan Eastside (511455) 138kV line, near Duncan.	OK	OK
21	FLT21-1PH	*Single phase fault and sequence like previous*	OK	OK
22	FLT22-3PH	3 phase fault on the OMDuncan (529304) to Comanche Tap (511494) 138kV line, near OMDuncan.	OK	OK
23	FLT23-1PH	*Single phase fault and sequence like previous*	OK	OK
24	FLT24-3PH	3 phase fault on the Rush Springs Tap North (511492) to Cornville (511449) 138kV line, near Cornville	OK	OK
25	FLT25-1PH	*Single phase fault and sequence like previous*	OK	OK

26	FLT26-3PH	3 phase fault on the Cimarron 345kV (514901) to 138kV (514898)/13.8kV (515714) transformer on the 345kV bus	OK	OK
27	FLT27-3PH	3 phase fault on the Sunnyside (515135) to Pooleville (515130) 138kV line, near Sunnyside.	OK	OK
28	FLT28-1PH	*Single phase fault and sequence like previous*	OK	OK
29	FLT29-3PH	3 phase fault on the Sunnyside (515135) to Uniroyal (515137) 138kV line, near Sunnyside.	OK	OK
30	FLT30-1PH	*Single phase fault and sequence like previous*	OK	OK
31	FLT31-3PH	3 phase fault on the Sunnyside (515135) to Lone Grove (515144) 138kV line, near Sunnyside.	OK	OK
32	FLT32-1PH	*Single phase fault and sequence like previous*	OK	OK
33	FLT33-3PH	3 phase fault on the Sunnyside (515135) to Rocky Point (515164) 138kV line, near Sunnyside	OK	OK
34	FLT34-1PH	*Single phase fault and sequence like previous*	OK	OK
35	FLT35-3PH	3 phase fault on the Ratliff 138kV (515129) to Ratliff 69kV (515128) transformer, on the 138kV bus	OK	OK
36	FLT36-3PH	3 phase fault on the Healton Tap 138kV (515141) to Healton Tap 69kV (515140) transformer, on the 138kV bus	OK	OK
37	FLT37-3PH	3 phase fault on the Duncan 138kV (511453) to Duncan 69kV (511455) transformer, on the 138kV bus.	OK	OK
38	FLT38-3PH	3 phase fault on the Cornville 138kV (511449) to Cornville 69kV (511450) transformer, on the 138kV bus.	OK	OK
39	FLT39-3PH	3 phase fault on the GEN-2011-040 to Ratliff (515129) 138kV line, near GEN-2011-040.	OK	OK
40	FLT40-1PH	*Single phase fault and sequence like previous*	OK	OK

Table 4: Contingency List Simulation Results for Group 6

7.0 Power Factor Analysis

A power factor analysis was performed for each wind farm request by modeling a VAR generator at the high voltage bus of each interconnection request. The VAR generator was set to hold a voltage schedule of at least 1.00 per unit at the point of interconnection for each request and all the contingencies listed in Table 6 for GEN-2011-040 and GEN-2011-050 were studied.

POI Voltage (Summer 1.02pu / Winter 1.02pu)	ASGI-2011-001							
CONTINGENCY	MW (S)	MVAR (S)	PF (S)		MW (W)	MVAR (W)	PF (W)	
No contingency	-110.4	9	0.9966	LEAD	-110.4	11	0.9950	LEAD
Fault on the Sunnyside (515136) to Lawton Eastside (511468) 345kV line, near Sunnyside.	-110.4	4.4	0.9992	LEAD	-110.4	10	0.9959	LEAD
Fault on the Sunnyside (515136) to Johnston County (514809) 345kV line, near Sunnyside.	-110.4	8.5	0.9970	LEAD	-110.4	9.3	0.9964	LEAD
Fault on the Sunnyside (515136) to Hugo (521157) 345kV line, near Sunnyside.	-110.4	-0.8	0.9999	LAG	-110.4	2.8	0.9996	LEAD
Fault on the Sunnyside 345kv (515136) to138kV (515135) transformer on the 345kV bus.	-110.4	14.6	0.9913	LEAD	-110.4	18.9	0.9856	LEAD
Fault on the GEN-2011-040 to Pooleville (515130) 138kV line, near GEN-2011-040.	-110.4	15.8	0.9899	LEAD	-110.4	21.2	0.9820	LEAD
Fault on the Pooleville (515130) to Fox (515131) 138kV line, near Pooleville.	-110.4	9.8	0.9960	LEAD	-110.4	9.9	0.9960	LEAD
Fault on one of the Lawton Eastside 345kV (511468) to138kV (511467) transformers on the 345kV bus.	-110.4	9.4	0.9963	LEAD	-110.4	10.8	0.9952	LEAD
Fault on the Ratliff (515129) to Prairie Point (515134) 138kV line, near Ratliff.	-110.4	9.6	0.9962	LEAD	-110.4	10.1	0.9958	LEAD
Fault on the Fox (515131) to Dundee (515132) 138kV line, near Dundee.	-110.4	7.1	0.9979	LEAD	-110.4	8.3	0.9971	LEAD
Fault on the G11_050-Tap (562081) to Rush Springs Tap (511491) 138kV line, near Rush Springs Tap.	-110.4	8.8	0.9968	LEAD	-110.4	10.7	0.9953	LEAD
Fault on the G11_050-Tap (562081) to Marlow (529307) 138kV line, near Marlow.	-110.4	8.7	0.9969	LEAD	-110.4	10.9	0.9951	LEAD
Fault on the Duncan (511453) to Duncan Eastside (511455) 138kV line, near Duncan.	-110.4	9	0.9966	LEAD	-110.4	11	0.9950	LEAD
Fault on the OMDuncan (529304) to Comanche Tap (511494) 138kV line, near OMDuncan.	-110.4	8.7	0.9969	LEAD	-110.4	10.7	0.9953	LEAD
Fault on the Rush Springs Tap North (511492) to Cornville (511449) 138kV line, near Cornville	-110.4	8.7	0.9969	LEAD	-110.4	10.7	0.9953	LEAD
Fault on the Cimarron 345kV (514901) to 138kV (514898)/13.8kV (515714) transformer on the 345kV bus	-110.4	9	0.9966	LEAD	-110.4	11.1	0.9949	LEAD
Fault on the Sunnyside (515135) to Pooleville (515130) 138kV line, near Sunnyside.	-110.4	12.6	0.9935	LEAD	-110.4	16.9	0.9884	LEAD
Fault on the Sunnyside (515135) to Uniroyal (515137) 138kV line, near Sunnyside.	-110.4	9.8	0.9960	LEAD	-110.4	10.5	0.9955	LEAD
Fault on the Sunnyside (515135) to Lone Grove (515144) 138kV line, near Sunnyside.	-110.4	11.5	0.9946	LEAD	-110.4	17.7	0.9873	LEAD
Fault on the Sunnyside (515135) to Rocky Point (515164) 138kV line, near Sunnyside	-110.4	8.9	0.9967	LEAD	-110.4	10.2	0.9957	LEAD
Fault on the Ratliff 138kV (515129) to Ratliff 69kV (515128) transformer, on the 138kV bus	-110.4	9.7	0.9961	LEAD	-110.4	10.8	0.9952	LEAD
Fault on the Healton Tap 138kV (515141) to Healton Tap 69kV (515140) transformer, on the 138kV bus	-110.4	9	0.9966	LEAD	-110.4	7.2	0.9978	LEAD
Fault on the Duncan 138kV (511453) to Duncan 69kV (511455) transformer, on the 138kV bus.	-110.4	8.2	0.9972	LEAD	-110.4	6.7	0.9981	LEAD
Fault on the Cornville 138kV (511449) to Cornville 69kV (511450) transformer, on the 138kV bus.	-110.4	8.9	0.9967	LEAD	-110.4	7.2	0.9978	LEAD

Fault on the GEN-2011-040 to Ratliff (515129) 138kV line, near GEN-2011-040.	-110.4	13.7	0.9923	LEAD	-110.4	7.2	0.9978	LEAD

(S) - Summer Case
(W) - Winter Case
Highest Leading Power Factor
Highest Lagging Power Factor

Table 6: GEN-2011-040 Power Factor Table

POI Voltage (Summer 1.02pu / Winter 1.02pu)	ASGI-2011-003							
CONTINGENCY	MW (S)	MVAR (S)	PF (S)		MW (W)	MVAR (W)	PF (W)	
No contingency	-109.8	-26.4	0.9722	LAG	-109.8	-9.6	0.9961	LAG
Fault on the Sunnyside (515136) to Lawton Eastside (511468) 345kV line, near Sunnyside.	-109.8	-34.4	0.9542	LAG	-109.8	-21.3	0.9816	LAG
Fault on the Sunnyside (515136) to Johnston County (514809) 345kV line, near Sunnyside.	-109.8	-27.8	0.9694	LAG	-109.8	-11.4	0.9946	LAG
Fault on the Sunnyside (515136) to Hugo (521157) 345kV line, near Sunnyside.	-109.8	-27.9	0.9692	LAG	-109.8	-12.1	0.9939	LAG
Fault on the Sunnyside 345kv (515136) to138kV (515135) transformer on the 345kV bus.	-109.8	-26.2	0.9726	LAG	-109.8	-9.4	0.9963	LAG
Fault on the GEN-2011-040 to Pooleville (515130) 138kV line, near GEN-2011-040.	-109.8	-26.3	0.9724	LAG	-109.8	-9.5	0.9962	LAG
Fault on the Pooleville (515130) to Fox (515131) 138kV line, near Pooleville.	-109.8	-26.4	0.9722	LAG	-109.8	-9.6	0.9961	LAG
Fault on one of the Lawton Eastside 345kV (511468) to138kV (511467) transformers on the 345kV bus.	-109.8	-25.9	0.9732	LAG	-109.8	-9.1	0.9965	LAG
Fault on the Ratliff (515129) to Prairie Point (515134) 138kV line, near Ratliff.	-109.8	-26.5	0.9720	LAG	-109.8	-9.7	0.9961	LAG
Fault on the Fox (515131) to Dundee (515132) 138kV line, near Dundee.	-109.8	-26.4	0.9722	LAG	-109.8	-9.6	0.9961	LAG
Fault on the G11_050-Tap (562081) to Rush Springs Tap (511491) 138kV line, near Rush Springs Tap.	-109.8	0.6	0.9999	LEAD	-109.8	11	0.9950	LEAD
Fault on the G11_050-Tap (562081) to Marlow (529307) 138kV line, near Marlow.	-109.8	-2.7	0.9996	LAG	-109.8	5	0.9989	LEAD
Fault on the Duncan (511453) to Duncan Eastside (511455) 138kV line, near Duncan.	-109.8	-18.4	0.9862	LAG	-109.8	-3.8	0.9994	LAG
Fault on the OMDuncan (529304) to Comanche Tap (511494) 138kV line, near OMDuncan.	-109.8	-34	0.9552	LAG	-109.8	-12.5	0.9935	LAG
Fault on the Rush Springs Tap North (511492) to Cornville (511449) 138kV line, near Cornville	-109.8	-9.7	0.9961	LAG	-109.8	5.3	0.9988	LEAD
Fault on the Cimarron 345kV (514901) to 138kV (514898)/13.8kV (515714) transformer on the 345kV bus	-109.8	-28.4	0.9681	LAG	-109.8	-11.3	0.9947	LAG
Fault on the Sunnyside (515135) to Pooleville (515130) 138kV line, near Sunnyside.	-109.8	-26.4	0.9722	LAG	-109.8	-9.6	0.9961	LAG
Fault on the Sunnyside (515135) to Uniroyal (515137) 138kV line, near Sunnyside.	-109.8	-26.7	0.9716	LAG	-109.8	-9.9	0.9959	LAG

Fault on the Sunnyside (515135) to Lone Grove (515144) 138kV line, near Sunnyside.	-109.8	-26.4	0.9722	LAG	-109.8	-9.6	0.9961	LAG
Fault on the Sunnyside (515135) to Rocky Point (515164) 138kV line, near Sunnyside	-109.8	-26.6	0.9718	LAG	-109.8	-9.8	0.9960	LAG
Fault on the Ratliff 138kV (515129) to Ratliff 69kV (515128) transformer, on the 138kV bus	-109.8	-26.4	0.9722	LAG	-109.8	-9.6	0.9961	LAG
Fault on the Healton Tap 138kV (515141) to Healton Tap 69kV (515140) transformer, on the 138kV bus	-109.8	-26.4	0.9722	LAG	-109.8	-9.6	0.9961	LAG
Fault on the Duncan 138kV (511453) to Duncan 69kV (511455) transformer, on the 138kV bus.	-109.8	-20.9	0.9823	LAG	-109.8	-7.1	0.9979	LAG
Fault on the Cornville 138kV (511449) to Cornville 69kV (511450) transformer, on the 138kV bus.	-109.8	-24.2	0.9765	LAG	-109.8	-8.4	0.9970	LAG
Fault on the GEN-2011-040 to Ratliff (515129) 138kV line, near GEN-2011-040.	-109.8	-26.5	0.9720	LAG	-109.8	-9.8	0.9960	LAG

(S) - Summer Case
(W) - Winter Case
Highest Lagging Power Factor
Highest Leading Power Factor

Table 7: GEN-2011-050 Power Factor Table

8.0 Conclusion

A transient stability study has been performed by Southwest Power Pool (SPP) to evaluate the interconnection requests in the Definitive Impact Study Interconnection Study (DISIS-2011-002) for Group 14 in the South Central Oklahoma area.

The DISIS-2011-002 study has two (2) Interconnection Requests in the South Central Oklahoma area. The interconnection requests include GEN-2011-040 and GEN-2011-050. The interconnection requests in DISIS-2011-002 Group 14 are dispatching 396MW.

The results of a stability analysis determined that for the addition of the DISIS-2011-002 interconnection requests, the transmission system was found to remain stable for both summer and winter peak conditions with all required network upgrades in service. Additionally, the projects that were wind farms were found to stay connected during the contingencies that were studied, meeting the Low Voltage Ride Through (LVRT) requirements of FERC Order #661A.

The power factor analysis indicated that all DISIS-2011-002 interconnection requests will be required to maintain 95% lagging (producing vars) and 95% leading (absorbing vars) power factor at the point of interconnection. The final power factor analyses are shown in Tables 6, 7 and 8.

If any previously queued projects that were included in this study drop out, then this System Impact Study may have to be revised to determine the impacts of this Interconnection Customer's project on transmission facilities. In accordance with FERC and SPP procedures, the study cost for restudy shall be borne by the Interconnection Customer.

W: Stability Study for Group 15

No requests were located in the cluster group